MCP3301

13-Bit Differential Input, Low Power A/D Converter with SPI Serial Interface

Features

- Full Differential Inputs
- ±1 LSB max DNL
- ±1 LSB max INL (MCP3301-B)
- ±2 LSB max INL (MCP3301-C)
- Single supply operation: 4.5V to 5.5V
- 100 ksps sampling rate with 5V supply voltage
- 50 nA typical standby current, 1 µA max
- 450 µA max active current at 5V
- Industrial temp range: -40°C to +85°C
- 8-pin MSOP, PDIP, and SOIC packages
- Mixed Signal PICtail™ Demo Board (P/N: MXSIGDM) compatible

Applications

- Remote Sensors
- Battery-operated Systems
- Transducer Interface

Functional Block Diagram

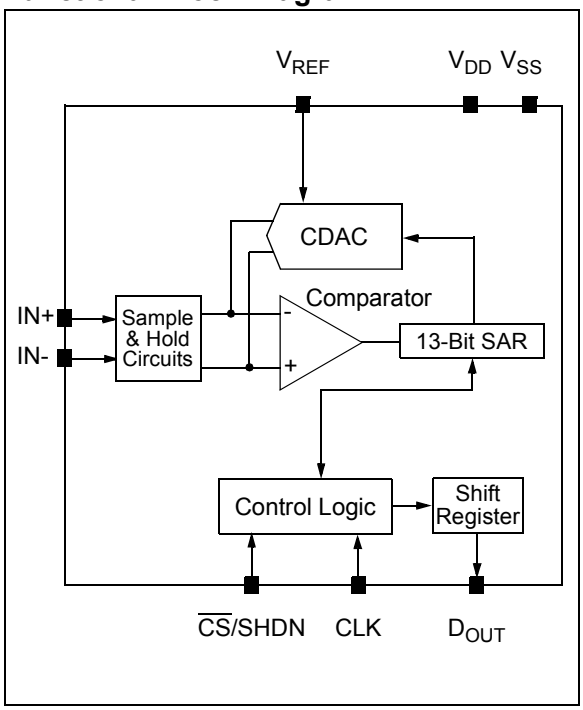

General Description

The MCP3301 13-bit analog-to-digital (A/D) converter features full differential inputs and low power consumption in a small package that is ideal for battery-powered systems and remote data acquisition applications.

Incorporating a successive approximation architecture with on-board sample and hold circuitry, the 13-bit A/D converter is specified to have ±1 LSB Differential Nonlinearity (DNL) and ±1 LSB Integral Nonlinearity (INL) for B-grade devices and ±2 LSB for C-grade devices. The industry-standard SPI serial interface enables 13-bit A/D converter capability to be added to any PIC® microcontroller.

The MCP3301 features a low current design that permits operation with typical standby and active currents of only 50 nA and 300 µA, respectively. The device is capable of conversion rates of up to 100 ksps with tested specifications over a 4.5V to 5.5V supply range. The reference voltage can be varied from 400 mV to 5V, yielding input-referred resolution between 98 µV and 1.22 mV.

The MCP3301 is available in 8-pin PDIP, 150 mil SOIC, and MSOP packages. The full differential inputs of this device enable a wide variety of signals to be used in applications such as remote data acquisition, portable instrumentation, and battery-operated applications.

Package Types

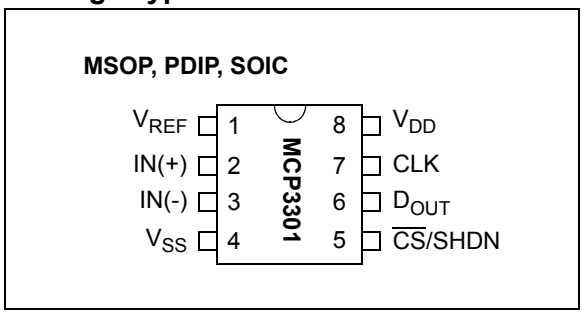

© 2001-2011 Microchip Technology Inc.

1.0 ELECTRICAL CHARACTERISTICS

Maximum Ratings*

V_{DD} 7.0V
All inputs and outputs w.r.t. V_{SS} ..... -0.3V to V_{DD} +0.3V
Storage temperature ..... -65°C to +150°C
Ambient temperature with power applied ..... -65°C to +125°C
Maximum Junction Temperature ..... 150°C
ESD protection on all pins (HBM) ..... > 4 kV

***Notice:** Stresses above those listed under "Maximum ratings" may cause permanent damage to the device. This is a stress rating only and functional operation of the device at those or any other conditions above those indicated in the operational listings of this specification is not implied. Exposure to maximum rating conditions for extended periods may affect device reliability.

ELECTRICAL CHARACTERISTICS

Electrical Characteristics: Unless otherwise noted, all parameters apply at V_{DD} = 5V, V_{SS} = 0V, and V_{REF} = 5V. Full differential input configuration (Figure 1-5) with fixed common mode voltage of 2.5V. All parameters apply over temperature with T_{AMB} = -40°C to +85°C (**Note 7**). Conversion speed (F_{SAMPLE}) is 100 ksps with F_{CLK} = 17*F_{SAMPLE}

Parameter	Symbol	Min	Typ	Max	Units	Conditions
Conversion Rate						
Maximum Sampling Frequency	F_{SAMPLE}	—	—	100	ksps	See F_{CLK} specifications (**Note 8**)
Conversion Time	t_{CONV}		13		CLK periods	
Acquisition Time	t_{ACQ}		1.5		CLK periods	
DC Accuracy						
Resolution			12 data bits + sign		bits	
Integral Nonlinearity	INL	— —	±0.5 ±1	±1 ±2	LSB	MCP3301-B MCP3301-C
Differential Nonlinearity	DNL	—	±0.5	±1	LSB	Monotonic with no missing codes over temperature
Positive Gain Error		-3	-0.75	+2	LSB	
Negative Gain Error		-3	-0.5	+2	LSB	
Offset Error		-3	+3	+6	LSB	
Dynamic Performance						
Total Harmonic Distortion	THD	—	-91	—	dB	**Note 3**
Signal to Noise and Distortion	SINAD	—	78	—	dB	**Note 3**
Spurious Free Dynamic Range	SFDR	—	92	—	dB	**Note 3**
Common-Mode Rejection	CMRR	—	79	—	dB	**Note 6**
Power Supply Rejection	PSR	—	74	—	dB	**Note 4**

Note 1: This specification is established by characterization and not 100% tested.
2: See characterization graphs that relate converter performance to V_{REF} level.
3: V_{IN} = 0.1V to 4.9V @ 1 kHz.
4: V_{DD} = 5V DC ±500 mV_{P-P} @ 1 kHz, see test circuit Figure 1-4.
5: Maximum clock frequency specification must be met.
6: V_{REF} = 400 mV, V_{IN} = 0.1V to 4.9V @ 1 kHz
7: MSOP devices are only specified at 25°C and +85°C.
8: For slow sample rates, see **Section 5.2.1 "Maintaining Minimum Clock Speed"** for limitations on clock frequency.
9: 4.5V - 5.5V is the supply voltage range for specified performance

© 2001-2011 Microchip Technology Inc.

ELECTRICAL CHARACTERISTICS (CONTINUED)

Electrical Characteristics: Unless otherwise noted, all parameters apply at V_{DD} = 5V, V_{SS} = 0V, and V_{REF} = 5V. Full differential input configuration (Figure 1-5) with fixed common mode voltage of 2.5V. All parameters apply over temperature with T_{AMB} = -40°C to +85°C (**Note 7**). Conversion speed (F_{SAMPLE}) is 100 ksps with F_{CLK} = 17*F_{SAMPLE}

Parameter	Symbol	Min	Typ	Max	Units	Conditions
Reference Input						
Voltage Range		0.4	—	V_{DD}	V	**Note 2**
Current Drain		— —	100 0.001	150 3	µA µA	$\overline{CS}$ = V_{DD} = 5V
Analog Inputs						
Full-Scale Input Span	IN(+)-IN(-)	-V_{REF}	—	V_{REF}	V	
Absolute Input Voltage	IN(+)	-0.3	—	V_{DD} + 0.3	V	
	IN(-)	-0.3	—	V_{DD} + 0.3	V	
Leakage Current		—	0.001	±1	µA	
Switch Resistance	R_S	—	1	—	kΩ	See Figure 5-3
Sample Capacitor	C_{SAMPLE}	—	25	—	pF	See Figure 5-3
Digital Input/Output						
Data Coding Format		Binary Two's Complement				
High Level Input Voltage	V_{IH}	0.7 V_{DD}	—	—	V	
Low Level Input Voltage	V_{IL}	—	—	0.3 V_{DD}	V	
High Level Output Voltage	V_{OH}	4.1	—	—	V	I_{OH} = -1 mA, V_{DD} = 4.5V
Low Level Output Voltage	V_{OL}	—	—	0.4	V	I_{OL} = 1 mA, V_{DD} = 4.5V
Input Leakage Current	I_{LI}	-10	—	10	µA	V_{IN} = V_{SS} or V_{DD}
Output Leakage Current	I_{LO}	-10	—	10	µA	V_{OUT} = V_{SS} or V_{DD}
Pin Capacitance	C_{IN}, C_{OUT}	—	—	10	pF	T_{AMB} = 25°C, f = 1 MHz, **Note 1**
Timing Specifications						
Clock Frequency **(Note 8)**	F_{CLK}	0.085	—	1.7	MHz	V_{DD} = 5V, F_{SAMPLE} = 100 ksps
Clock High Time	t_{HI}	275	—	—	ns	**Note 5**
Clock Low Time	t_{LO}	275	—	—	ns	**Note 5**
$\overline{CS}$ Fall To First Rising CLK Edge	t_{SUCS}	100	—	—	ns	
CLK Fall To Output Data Valid	t_{DO}	—	—	125 200	ns ns	V_{DD} = 5V, see Figure 1-2 V_{DD} = 2.7V, see Figure 1-2
CLK Fall To Output Enable	t_{EN}	—	—	125 200	ns ns	V_{DD} = 5V, see Figure 1-2 V_{DD} = 2.7V, see Figure 1-2
$\overline{CS}$ Rise To Output Disable	t_{DIS}	—	—	100	ns	See test circuits, Figure 1-2; **Note 1**
$\overline{CS}$ Disable Time	t_{CSH}	580	—	—	ns	
D_{OUT} Rise Time	t_R	—	—	100	ns	See test circuits, Figure 1-2; **Note 1**
D_{OUT} Fall Time	t_F	—	—	100	ns	See test circuits, Figure 1-2; **Note 1**

Note 1: This specification is established by characterization and not 100% tested.
2: See characterization graphs that relate converter performance to V_{REF} level.
3: V_{IN} = 0.1V to 4.9V @ 1 kHz.
4: V_{DD} = 5V DC ±500 mV_{P-P} @ 1 kHz, see test circuit Figure 1-4.
5: Maximum clock frequency specification must be met.
6: V_{REF} = 400 mV, V_{IN} = 0.1V to 4.9V @ 1 kHz
7: MSOP devices are only specified at 25°C and +85°C.
8: For slow sample rates, see **Section 5.2.1 "Maintaining Minimum Clock Speed"** for limitations on clock frequency.
9: 4.5V - 5.5V is the supply voltage range for specified performance

ELECTRICAL CHARACTERISTICS (CONTINUED)

Electrical Characteristics: Unless otherwise noted, all parameters apply at V_{DD} = 5V, V_{SS} = 0V, and V_{REF} = 5V. Full differential input configuration (Figure 1-5) with fixed common mode voltage of 2.5V. All parameters apply over temperature with T_{AMB} = -40°C to +85°C (**Note 7**). Conversion speed (F_{SAMPLE}) is 100 ksps with F_{CLK} = 17*F_{SAMPLE}

Parameter	Symbol	Min	Typ	Max	Units	Conditions
Power Requirements						
Operating Voltage	V_{DD}	4.5	—	5.5	V	**Note 9**
Operating Current	I_{DD}	— —	300 200	450 —	µA	V_{DD} , V_{REF} = 5V, D_{OUT} unloaded V_{DD}, V_{REF} = 2.7V, D_{OUT} unloaded
Standby Current	I_{DDS}	—	0.05	1	µA	$\overline{CS}$ = V_{DD} = 5.0V
Temperature Ranges						
Specified Temperature Range	T_A	-40	—	+85	°C	
Operating Temperature Range	T_A	-40	—	+85	°C	
Storage Temperature Range	T_A	-65	—	+150	°C	
Thermal Package Resistance						
Thermal Resistance, 8L-MSOP	θ_{JA}	—	206	—	°C/W	
Thermal Resistance, 8L-PDIP	θ_{JA}	—	85	—	°C/W	
Thermal Resistance, 8L-SOIC	θ_{JA}	—	163	—	°C/W	

Note 1: This specification is established by characterization and not 100% tested.
2: See characterization graphs that relate converter performance to V_{REF} level.
3: V_{IN} = 0.1V to 4.9V @ 1 kHz.
4: V_{DD} = 5V DC ±500 mV_{P-P} @ 1 kHz, see test circuit Figure 1-4.
5: Maximum clock frequency specification must be met.
6: V_{REF} = 400 mV, V_{IN} = 0.1V to 4.9V @ 1 kHz
7: MSOP devices are only specified at 25°C and +85°C.
8: For slow sample rates, see **Section 5.2.1 "Maintaining Minimum Clock Speed"** for limitations on clock frequency.
9: 4.5V - 5.5V is the supply voltage range for specified performance

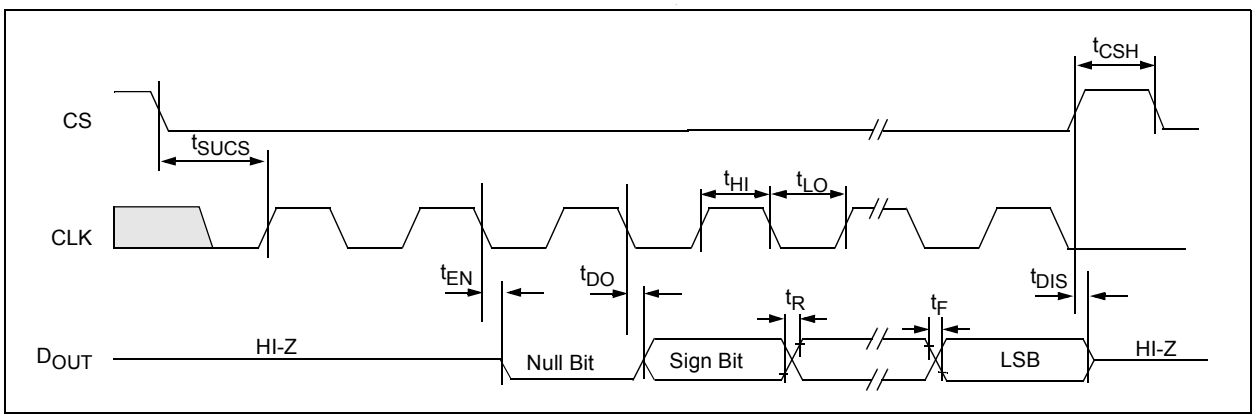

FIGURE 1-1: *Timing Parameters.*

© 2001-2011 Microchip Technology Inc.

1.1 Test Circuits

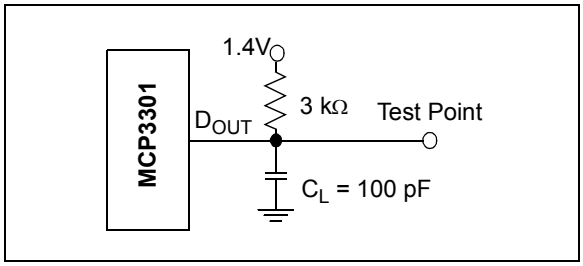

FIGURE 1-2: *Load Circuit for t_R, t_F, t_{DO}.*

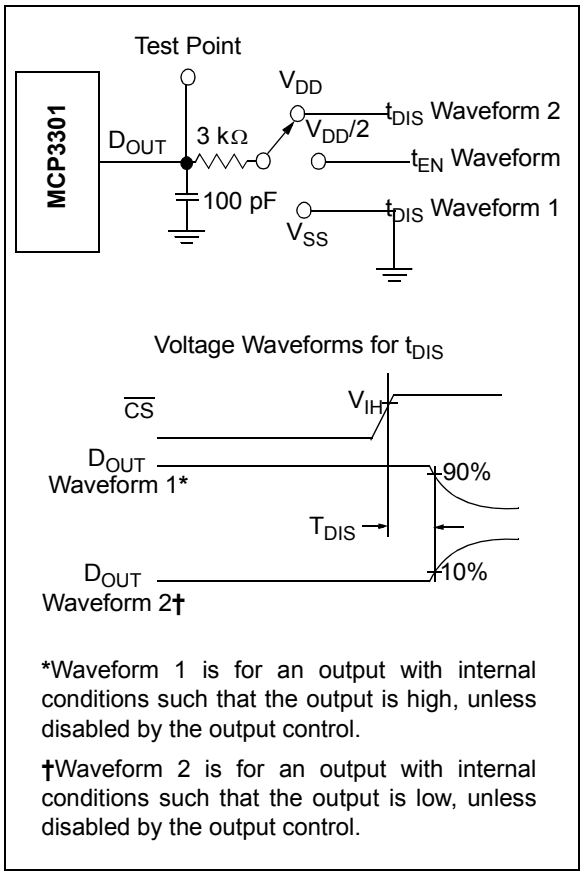

FIGURE 1-3: *Load Circuit for T_{DIS} and T_{EN}.*

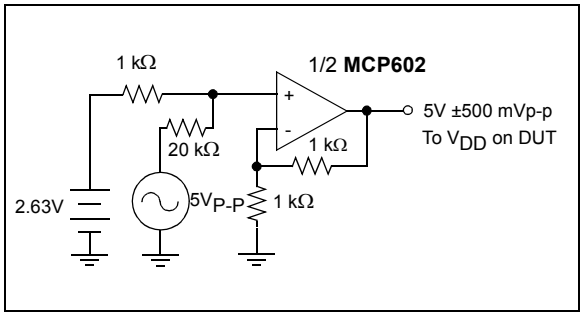

FIGURE 1-4: *Power Supply Sensitivity Test Circuit (PSRR).*

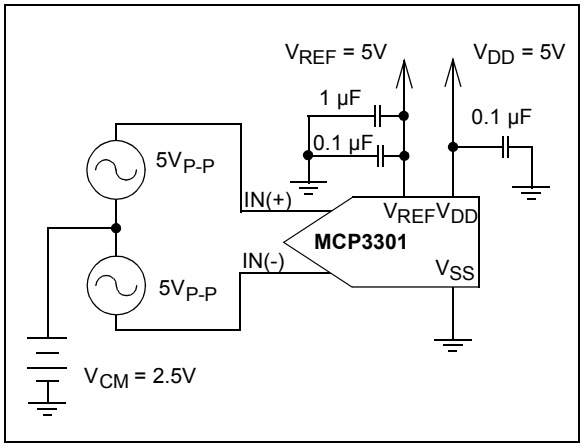

FIGURE 1-5: *Full Differential Test Configuration Example.*

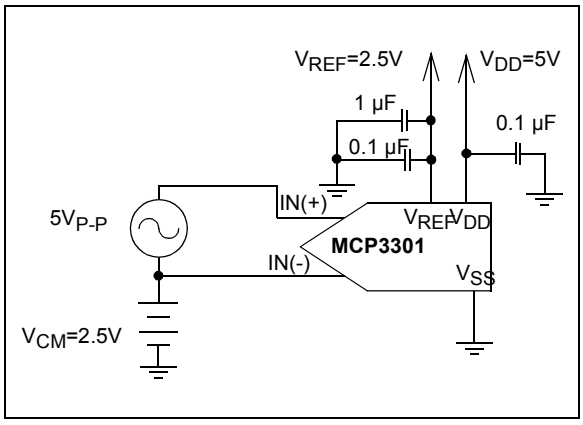

FIGURE 1-6: *Pseudo Differential Test Configuration Example.*

2.0 TYPICAL PERFORMANCE CURVES

Note:	The graphs and tables provided following this note are a statistical summary based on a limited number of samples and are provided for informational purposes only. The performance characteristics listed herein are not tested or guaranteed. In some graphs or tables, the data presented may be outside the specified operating range (e.g., outside specified power supply range) and therefore outside the warranted range.

Note: Unless otherwise indicated, $V_{DD} = V_{REF} = 5V$, Full differential input configuration, $V_{SS} = 0V$, $F_{SAMPLE} = 100$ ksps, $F_{CLK} = 17*F_{SAMPLE}$, $T_A = 25°C$.

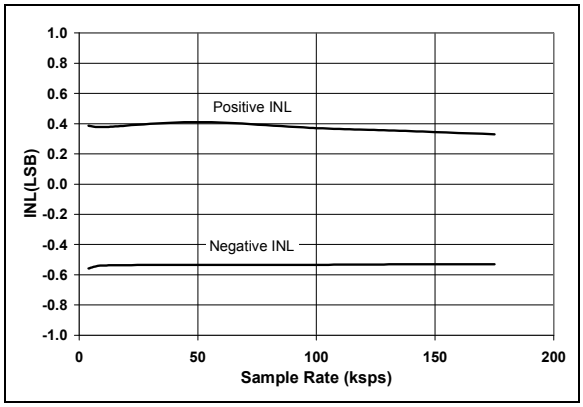

FIGURE 2-1: *Integral Nonlinearity (INL) vs. Sample Rate.*

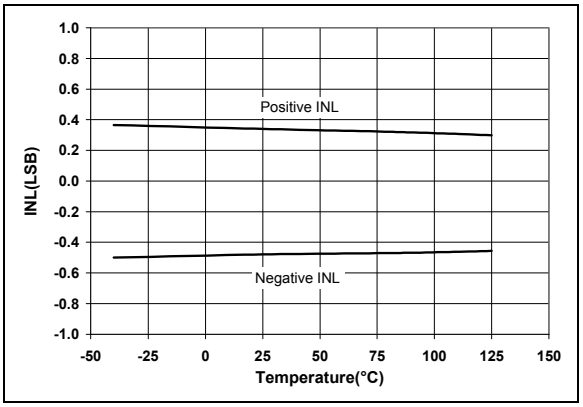

FIGURE 2-4: *Integral Nonlinearity (INL) vs. Temperature.*

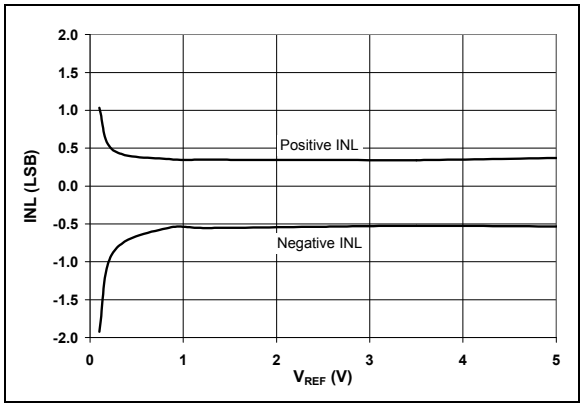

FIGURE 2-2: *Integral Nonlinearity (INL) vs. V_{REF}.*

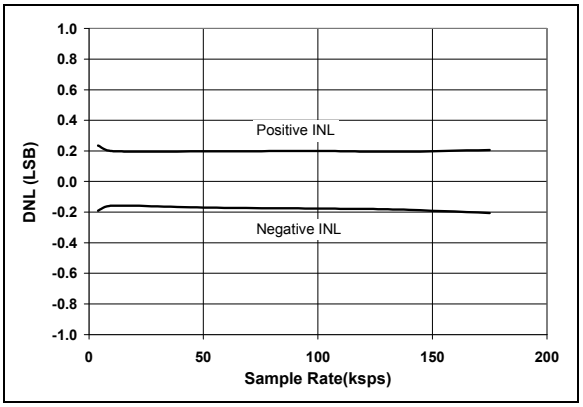

FIGURE 2-5: *Differential Nonlinearity (DNL) vs. Sample Rate.*

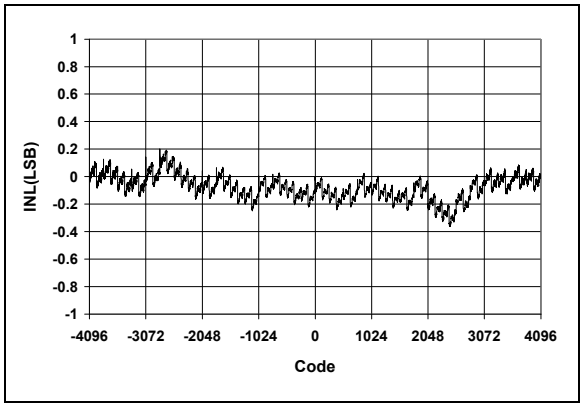

FIGURE 2-3: *Integral Nonlinearity (INL) vs. Code (Representative Part).*

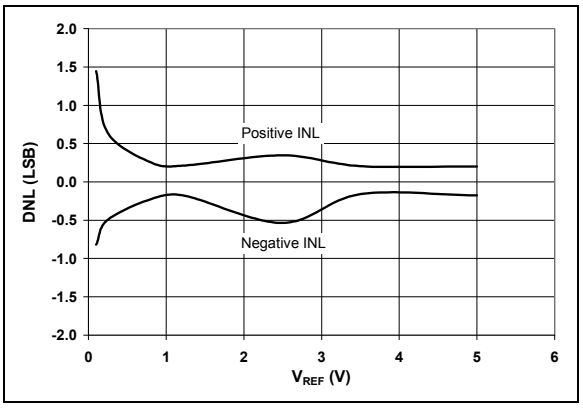

FIGURE 2-6: *Differential Nonlinearity (DNL) vs. V_{REF}.*

© 2001-2011 Microchip Technology Inc.

Note: Unless otherwise indicated, $V_{DD} = V_{REF} = 5V$, Full differential input configuration, $V_{SS} = 0V$, $F_{SAMPLE} = 100$ ksps, $F_{CLK} = 17*F_{SAMPLE}$, $T_A = 25°C$.

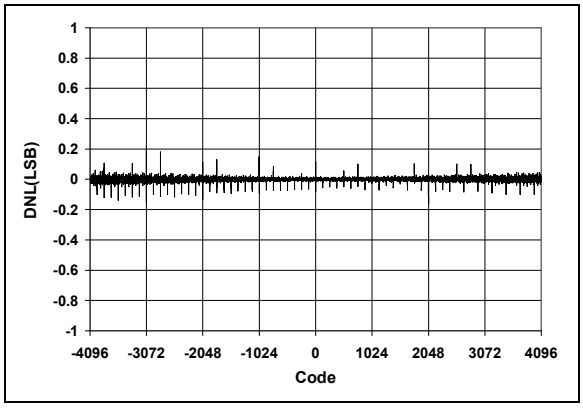

FIGURE 2-7: *Differential Nonlinearity (DNL) vs. Code (Representative Part).*

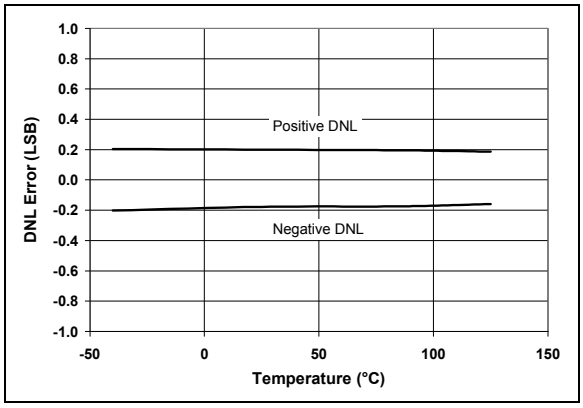

FIGURE 2-8: *Differential Nonlinearity (DNL) vs. Temperature.*

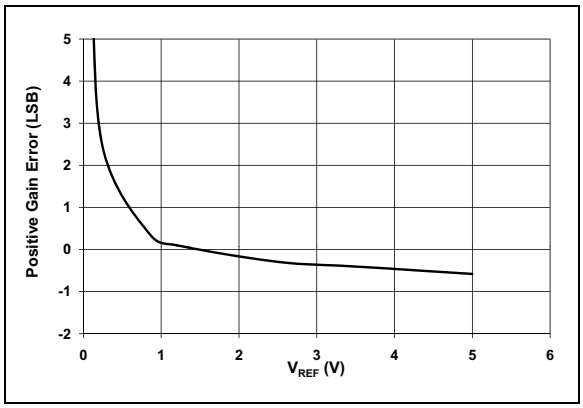

FIGURE 2-9: *Positive Gain Error vs. V_{REF}.*

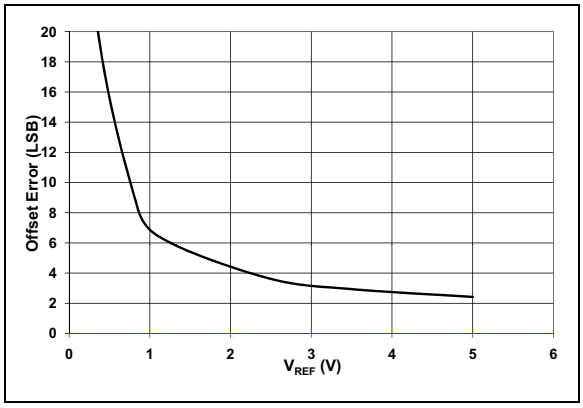

FIGURE 2-10: *Offset Error vs. V_{REF}.*

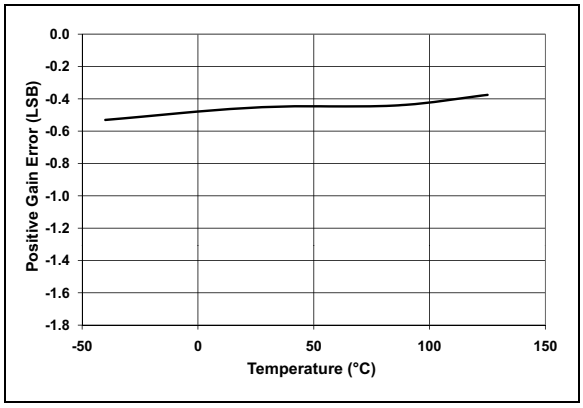

FIGURE 2-11: *Positive Gain Error vs. Temperature.*

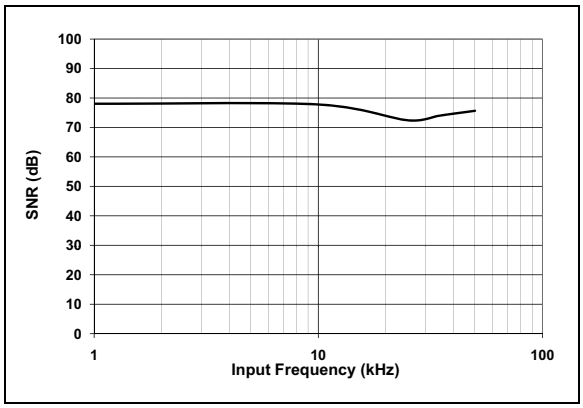

FIGURE 2-12: *Signal to Noise Ratio (SNR) vs. Input Frequency.*

Note: Unless otherwise indicated, $V_{DD} = V_{REF} = 5V$, Full differential input configuration, $V_{SS} = 0V$, $F_{SAMPLE} = 100$ ksps, $F_{CLK} = 17*F_{SAMPLE}$, $T_A = 25°C$.

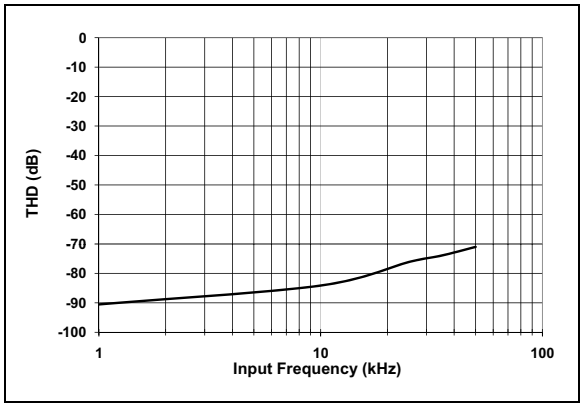

FIGURE 2-13: *Total Harmonic Distortion (THD) vs. Input Frequency.*

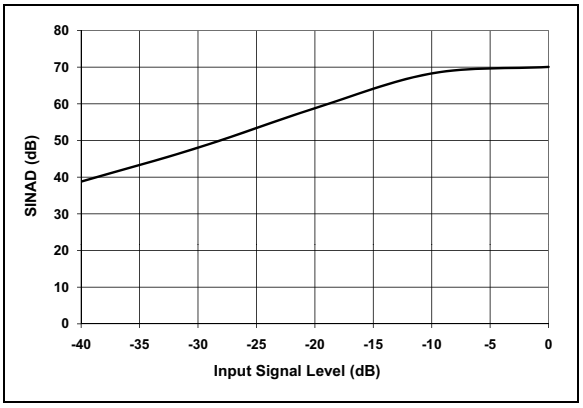

FIGURE 2-16: *Signal to Noise and Distortion (SINAD) vs. Input Signal Level.*

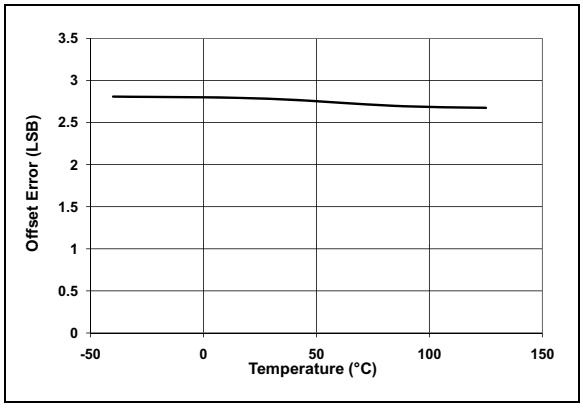

FIGURE 2-14: *Offset Error vs. Temperature.*

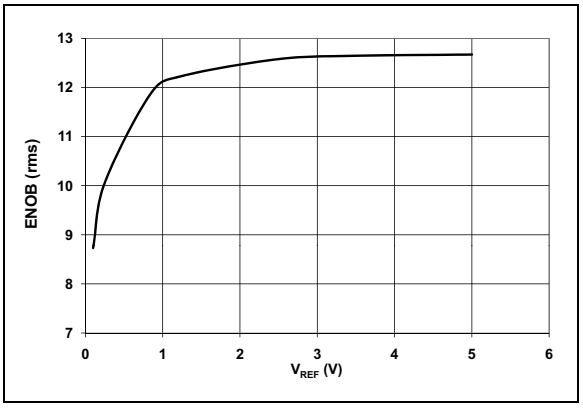

FIGURE 2-17: *Effective Number of Bits (ENOB) vs. V_{REF}.*

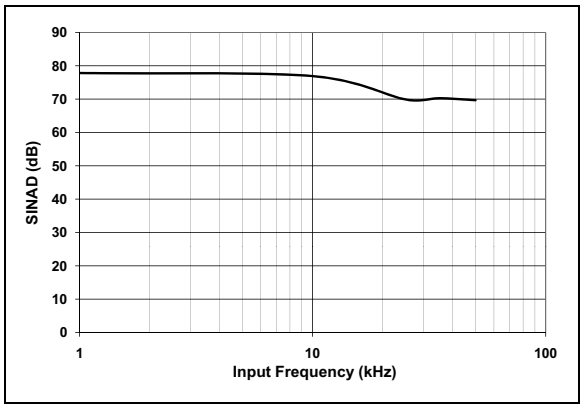

FIGURE 2-15: *Signal to Noise and Distortion (SINAD) vs. Input Frequency.*

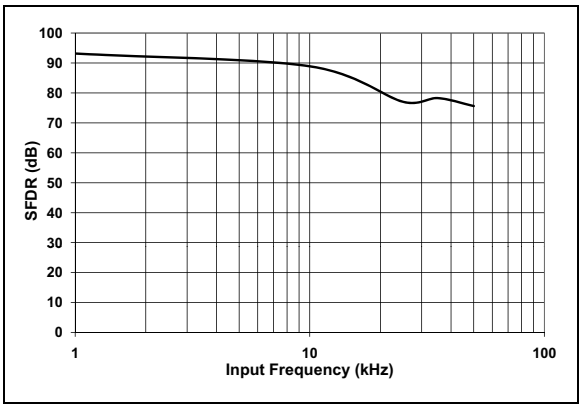

FIGURE 2-18: *Spurious Free Dynamic Range (SFDR) vs. Input Frequency.*

© 2001-2011 Microchip Technology Inc.

Note: Unless otherwise indicated, $V_{DD} = V_{REF} = 5V$, Full differential input configuration, $V_{SS} = 0V$, $F_{SAMPLE} = 100$ ksps, $F_{CLK} = 17*F_{SAMPLE}$, $T_A = 25°C$.

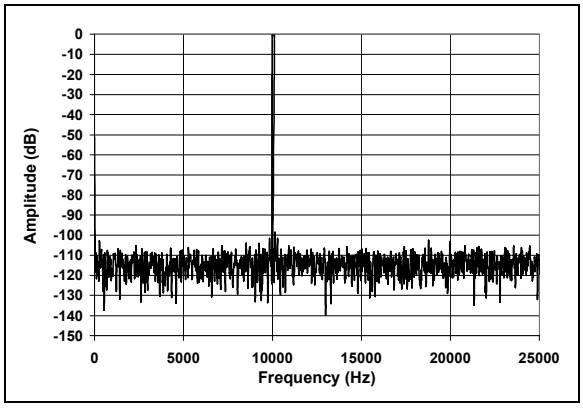

FIGURE 2-19: *Frequency Spectrum of 10 kHz Input (Representative Part).*

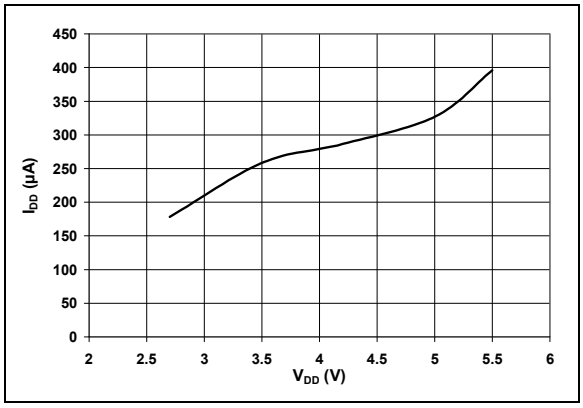

FIGURE 2-20: *Effective Number of Bits (ENOB) vs. Input Frequency.*

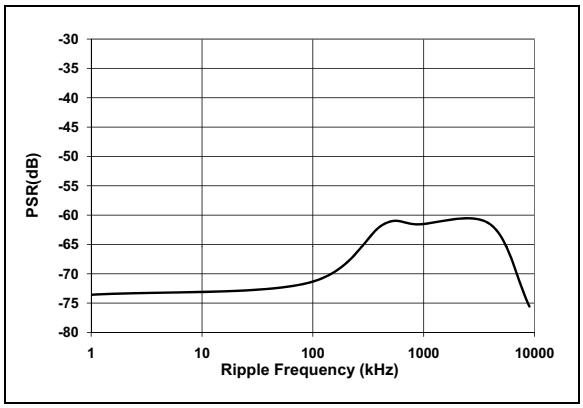

FIGURE 2-21: *Power Supply Rejection (PSR) vs. Ripple Frequency. A 0.1 µF bypass capacitor is connected to the V_{DD} pin.*

FIGURE 2-22: *I_{DD} vs. V_{DD}.*

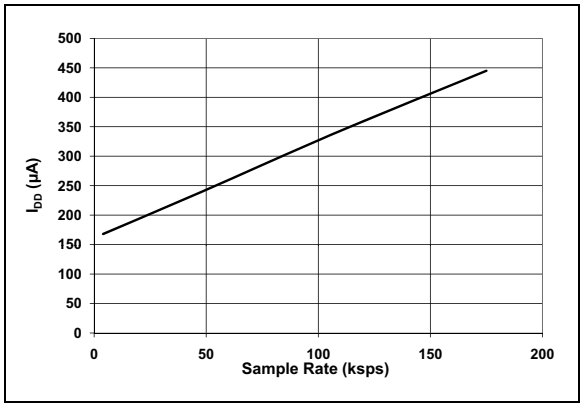

FIGURE 2-23: *I_{DD} vs. Sample Rate.*

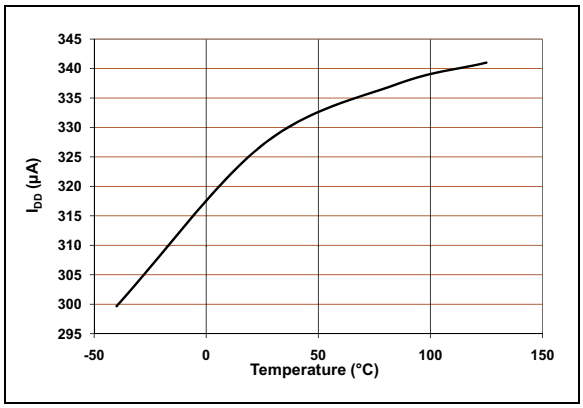

FIGURE 2-24: *I_{DD} vs. Temperature.*

Note: Unless otherwise indicated, $V_{DD} = V_{REF} = 5V$, Full differential input configuration, $V_{SS} = 0V$, $F_{SAMPLE} = 100$ ksps, $F_{CLK} = 17*F_{SAMPLE}$, $T_A = 25°C$.

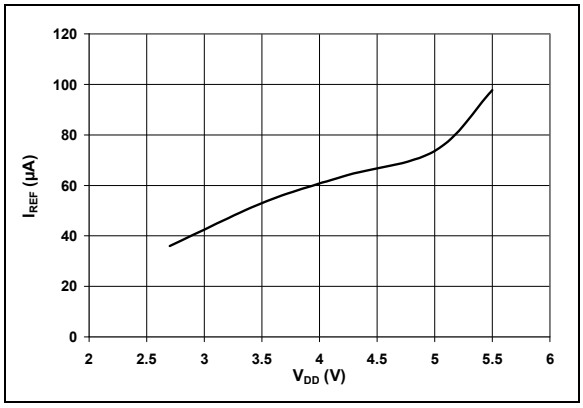

FIGURE 2-25: *I_{REF} vs. V_{DD}.*

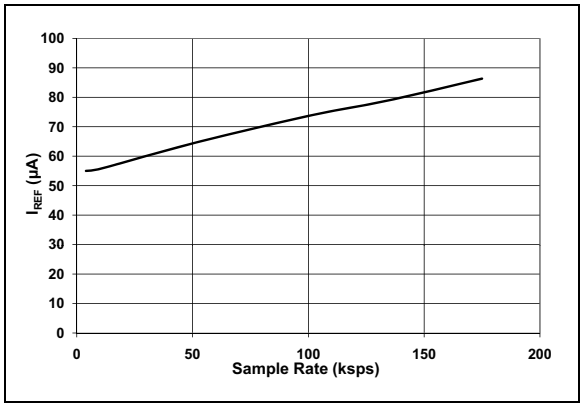

FIGURE 2-26: *I_{REF} vs. Sample Rate.*

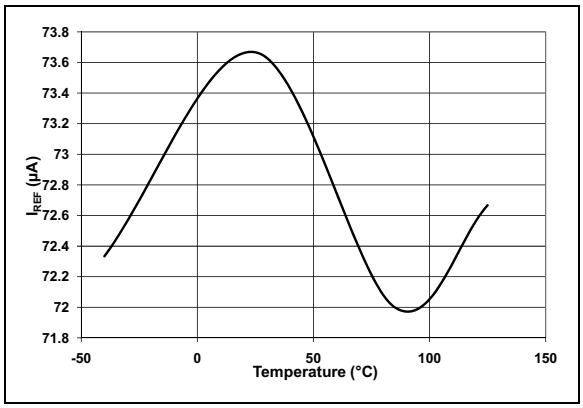

FIGURE 2-27: *I_{REF} vs. Temperature.*

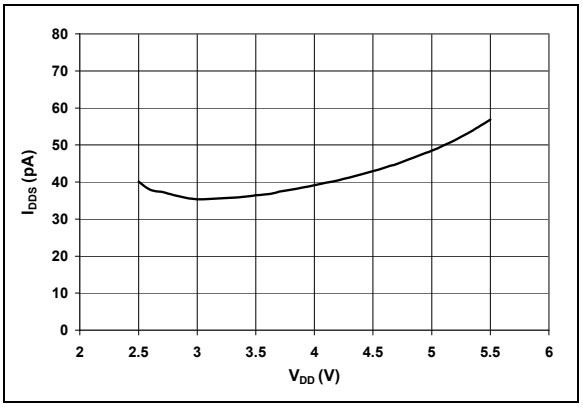

FIGURE 2-28: *I_{DDS} vs. V_{DD}.*

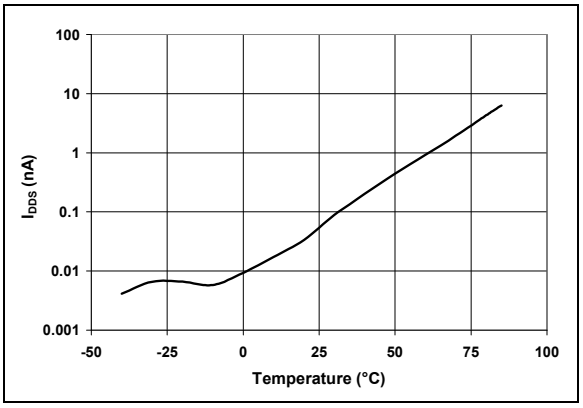

FIGURE 2-29: *I_{DDS} vs. Temperature.*

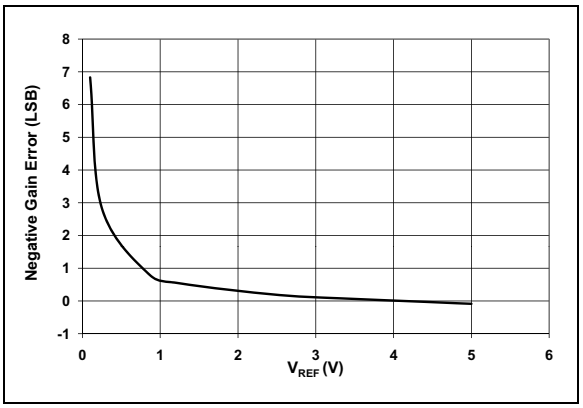

FIGURE 2-30: *Negative Gain Error vs. Reference Voltage.*

© 2001-2011 Microchip Technology Inc.

Note: Unless otherwise indicated, $V_{DD} = V_{REF} = 5V$, Full differential input configuration, $V_{SS} = 0V$, $F_{SAMPLE} = 100$ ksps, $F_{CLK} = 17*F_{SAMPLE}$, $T_A = 25°C$.

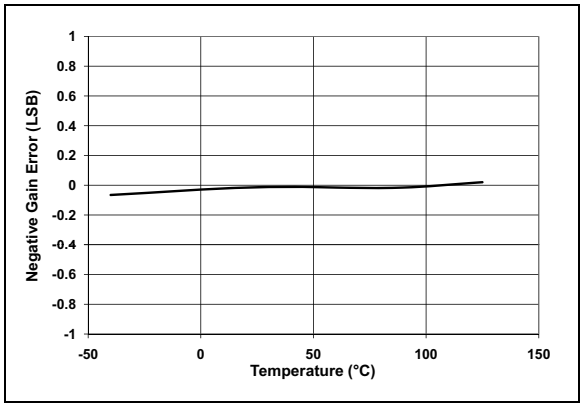

FIGURE 2-31: *Negative Gain Error vs. Temperature.*

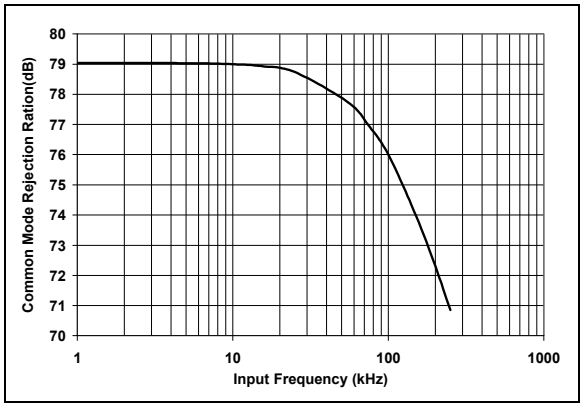

FIGURE 2-32: *Common Mode Rejection vs. Frequency.*

3.0 PIN DESCRIPTIONS

The descriptions of the pins are listed in Table 3-1.

TABLE 3-1: PIN FUNCTION TABLE

MSOP, PDIP, SOIC	Name	Function
1	V_{REF}	Reference Voltage Input
2	IN(+)	Positive Analog Input
3	IN(-)	Negative Analog Input
4	V_{SS}	Ground
5	$\overline{CS}$/SHDN	$\overline{\text{Chip Select}}$ / Shutdown Input
6	D_{OUT}	Serial Data Out
7	CLK	Serial Clock
8	V_{DD}	+4.5V to 5.5V Power Supply

3.1 Voltage Reference (V_{REF})

This input pin provides the reference voltage for the device, which determines the maximum range of the analog input signal and the LSB size.

The LSB size is determined by the equation shown below. As the reference input is reduced, the LSB size is reduced accordingly.

EQUATION

$$\text{LSB Size} = \frac{2 \times V_{REF}}{8192}$$

When using an external voltage reference device, the system designer should always refer to the manufacturer's recommendations for circuit layout. Any instability in the operation of the reference device will have a direct effect on the accuracy of the ADC conversion results.

3.2 Positive Analog Input (IN+)

This pin has an absolute voltage range of V_{SS}-0.3V to V_{DD}+0.3V. The full scale input range is defined as the absolute value of (IN+) - (IN-).

3.3 Negative Analog Input (IN-)

This pin has an absolute voltage range of V_{SS}-0.3V to V_{DD}+0.3V. The full scale input range is defined as the absolute value of (IN+) - (IN-).

3.4 Ground Connection (V_{SS})

If an analog ground plane is available, it is recommended that this device be tied to the analog ground plane in the circuit. See **Section 5.6 "Layout Considerations"**, for more information regarding circuit layout.

3.5 $\overline{\text{Chip Select}}$/Shutdown ($\overline{CS}$/SHDN)

The $\overline{CS}$/SHDN pin is used to initiate communication with the device when pulled low. This pin will end a conversion and put the device in low power standby when pulled high. The $\overline{CS}$/SHDN pin must be pulled high between conversions and cannot be tied low for multiple conversions. See Figure 6-2 for serial communication protocol.

3.6 Serial Data Output (D_{OUT})

The SPI serial data output pin is used to shift out the results of the A/D conversion. Data will always change on the falling edge of each clock as the conversion takes place. See Figure 6-2 for serial communication protocol.

3.7 Serial Clock (CLK)

The SPI clock pin is used to initiate a conversion, as well as to clock out each bit of the conversion as it takes place. See **Section 5.2 "Driving the Analog Input"** for constraints on clock speed, and Figure 6-2 for serial communication protocol.

3.8 Power Supply (V_{DD})

The device can operate from 2.7V to 5.5V, but the performance is applicable from a 4.5V to 5.5V supply range. To ensure accuracy, a 0.1 µF ceramic bypass capacitor should be placed as close as possible to the pin. See **Section 5.6 "Layout Considerations"** for more information regarding circuit layout.

© 2001-2011 Microchip Technology Inc.

4.0 DEFINITION OF TERMS

Bipolar Operation - This applies to either a differential or single-ended input configuration, where both positive and negative codes are output from the A/D converter. Full bipolar range includes all 8192 codes. For bipolar operation on a single-ended input signal, the A/D converter must be configured to operate in pseudo differential mode.

Unipolar Operation - This applies to either a single-ended or differential input signal where only one side of the device transfer is being used. This could be either the positive or negative side, depending on which input (IN+ or IN-) is being used for the DC bias. Full unipolar operation is equivalent to a 12-bit converter.

Full Differential Operation - Applying a full differential signal to both the IN(+) and IN(-) inputs is referred to as *full differential operation*. This configuration is described in Figure 1-5.

Pseudo-Differential Operation - Applying a single-ended signal to only one of the input channels with a bipolar output is referred to as *pseudo differential operation*. To obtain a bipolar output from a single-ended input signal the inverting input of the A/D converter must be biased above V_{SS}. This operation is described in Figure 1-6.

Integral Nonlinearity - The maximum deviation from a straight line passing through the endpoints of the bipolar transfer function is defined as the maximum *integral nonlinearity* error. The endpoints of the transfer function are a point 1/2 LSB above the first code transition (0x1000) and 1/2 LSB below the last code transition (0x0FFF).

Differential Nonlinearity - The difference between two measured adjacent code transitions and the 1 LSB ideal is defined as *differential nonlinearity*.

Positive Gain Error - This is the deviation between the last positive code transition (0x0FFF) and the ideal voltage level of V_{REF}-1/2 LSB, after the bipolar offset error has been adjusted out.

Negative Gain Error - This is the deviation between the last negative code transition (0X1000) and the ideal voltage level of -V_{REF}-1/2 LSB, after the bipolar offset error has been adjusted out.

Offset Error - This is the deviation between the first positive code transition (0x0001) and the ideal 1/2 LSB voltage level.

Acquisition Time - The *acquisition time* is defined as the time during which the internal sample capacitor is charging. This occurs for 1.5 clock cycles of the external CLK as defined in Figure 6-2.

Conversion Time - The *conversion time* occurs immediately after the *acquisition time*. During this time, successive approximation of the input signal occurs as the 13-bit result is being calculated by the internal circuitry. This occurs for 13 clock cycles of the external CLK as defined in Figure 6-2.

Signal to Noise Ratio - *Signal to Noise Ratio (SNR)* is defined as the ratio of the signal to noise measured at the output of the converter. The signal is defined as the rms amplitude of the fundamental frequency of the input signal. The noise value is dependant on the device noise as well as the quantization error of the converter and is directly affected by the number of bits in the converter. The *theoretical* signal to noise ratio limit based on quantization error only for an N-bit converter is defined as:

EQUATION

$$SNR = (6.02N + 1.76)dB$$

For a 13-bit converter, the theoretical SNR limit is 80.02 dB.

Total Harmonic Distortion - *Total Harmonic Distortion (THD)* is the ratio of the rms sum of the harmonics to the fundamental, measured at the output of the converter. For the MCP3301, it is defined using the first 9 harmonics, as shown in the following equation:

EQUATION

$$THD(\text{-}dB) = -20\log\frac{\sqrt{V_2^2 + V_3^2 + V_4^2 + \ldots + V_8^2 + V_9^2}}{V_1^2}$$

Here V_1 is the rms amplitude of the fundamental and V_2 through V_9 are the rms amplitudes of the second through ninth harmonics.

Signal-to-Noise plus Distortion (SINAD) - Numerically defined, *SINAD* is the calculated combination of SNR and THD. This number represents the dynamic performance of the converter, including any harmonic distortion.

EQUATION

$$SINAD(dB) = 20\log\sqrt{10^{(SNR/10)} + 10^{-(THD/10)}}$$

Effectlve Number of Bits - *Effective Number of Bits (ENOB)* states the relative performance of the ADC in terms of its resolution. This term is directly related to SINAD by the following equation:

EQUATION

$$ENOB(N) = \frac{SINAD - 1.76}{6.02}$$

For SINAD performance of 78 dB, the effective number of bits is 12.66.

Spurious Free Dynamic Range - *Spurious Free Dynamic Range (SFDR)* is the ratio of the rms value of the fundamental to the next largest component in the output spectrum of the ADC. This is, typically, the first harmonic, but could also be a noise peak.

5.0 APPLICATIONS INFORMATION

5.1 Conversion Description

The MCP3301MCP3301 A/D converter employs a conventional SAR architecture. With this architecture, the potential between the IN+ and IN- inputs are simultaneously sampled and stored with the internal sample circuits for 1.5 clock cycles (t_{ACQ}). Following this sample time, the input hold switches of the converter open and the device uses the collected charge to produce a serial 13-bit binary two's complement output code. This conversion process is driven by the external clock and must include 13 clock cycles, one for each bit. During this process, the most significant bit (MSB) is output first. This bit is the sign bit and indicates whether the IN+ input or the IN- input is at a higher potential.

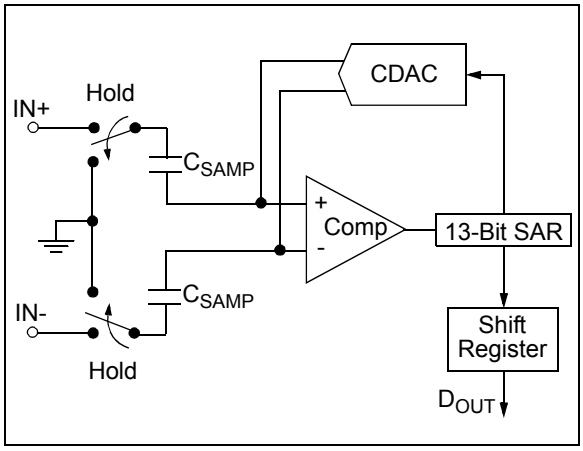

FIGURE 5-1: *Simplified Block Diagram.*

5.2 Driving the Analog Input

The analog input of the MCP3301 is easily driven either differentially or single ended. Any signal that is common to the two input channels will be rejected by the common mode rejection of the device. During the charging time of the sample capacitor, a small charging current will be required. For low source impedances, this input can be driven directly. For larger source impedances, a larger acquisition time will be required, due to the RC time constant that includes the source impedance. For the A/D Converter to meet specification, the charge holding capacitor (C_{SAMPLE}) must be given enough time to acquire a 13-bit accurate voltage level during the 1.5 clock cycle acquisition period.

An analog input model is shown in Figure 5-3. This model is accurate for an analog input, regardless of whether it is configured as a single-ended input or the IN+ and IN- input in differential mode. In this diagram, it is shown that the source impedance (R_S) adds to the internal sampling switch (R_{SS}) impedance, directly affecting the time that is required to charge the capacitor (C_{SAMPLE}). Consequently, a larger source impedance with no additional acquisition time increases the offset, gain, and integral linearity errors of the conversion. To overcome this, a slower clock speed can be used to allow for the longer charging time. Figure 5-2 shows the maximum clock speed associated with source impedances.

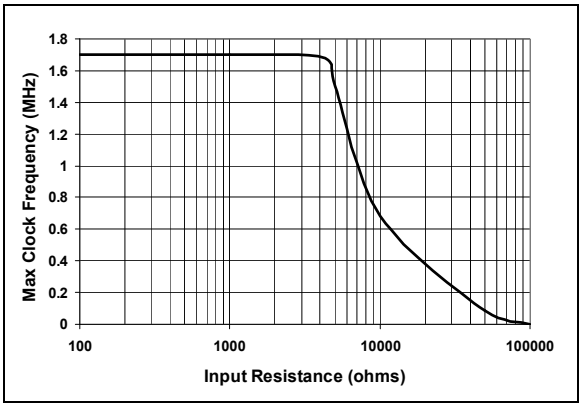

FIGURE 5-2: *Maximum Clock Frequency vs. Source Resistance (R_S) to maintain ±1 LSB INL.*

© 2001-2011 Microchip Technology Inc.

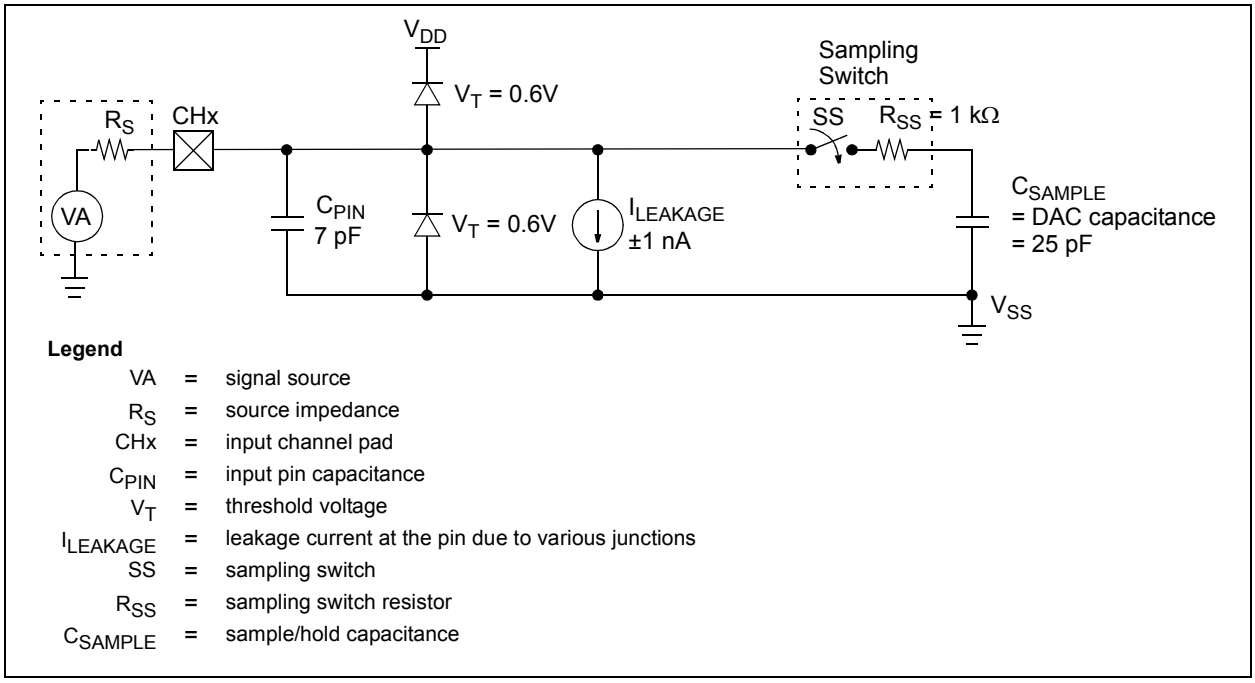

FIGURE 5-3: *Analog Input Model.*

5.2.1 MAINTAINING MINIMUM CLOCK SPEED

When the MCP3301 initiates, charge is stored on the sample capacitor. When the sample period is complete, the device converts one bit for each clock that is received. It is important for the user to note that a slow clock rate will allow charge to bleed off the sample capacitor while the conversion is taking place. For MCP3301 devices, the recommended minimum clock speed during the conversion cycle (t_{CONV}) is 85 kHz. Failure to meet this criteria may introduce linearity errors into the conversion outside the rated specifications. It should be noted that, during the entire conversion cycle, the A/D converter does not have requirements for clock speed or duty cycle, as long as all timing specifications are met.

5.3 Biasing Solutions

For pseudo-differential bipolar operation, the biasing circuit shown in Figure 5-4 shows a single-ended input AC coupled to the converter. This configuration will give a digital output range of -4096 to +4095. With the 2.5V reference, the LSB size is equal to 610 µV.

Although the ADC is not production tested with a 2.5V reference as shown, linearity will not change more than 0.1 LSB. See Figure 2-2 and Figure 2-6 for INL and DNL errors versus V_{REF} at V_{DD} = 5V. A trade-off exists between the high-pass corner and the acquisition time. The value of C will need to be quite large in order to bring down the high-pass corner. The value of R needs to be 1 kΩ or less, since higher input impedances require additional acquisition time.

Using the values in Figure 5-4, we have a 100 Hz corner frequency. See Figure 5-2 for the relationship between input impedance and acquisition time.

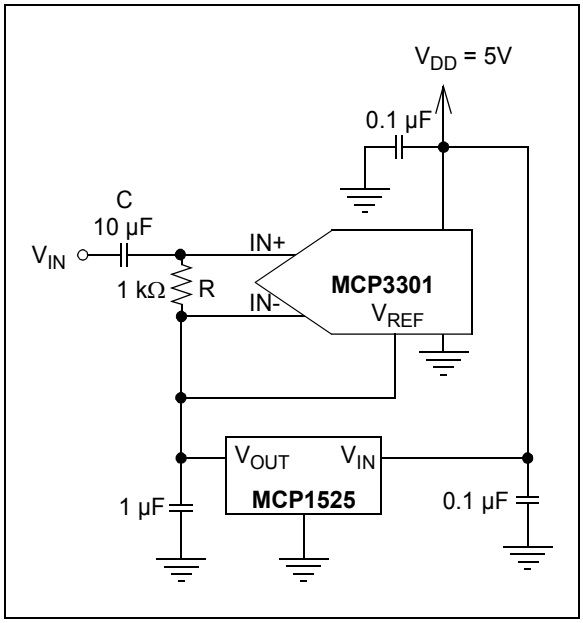

FIGURE 5-4: *Pseudo-differential biasing circuit for bipolar operation.*

Using an external operational amplifier on the input allows for gain and buffers the input signal from the input to the ADC, allowing for a higher source impedance. This circuit is shown in Figure 5-5.

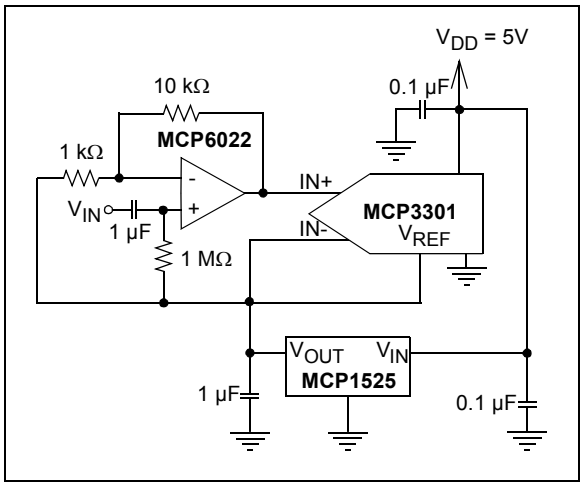

FIGURE 5-5: *Adding an amplifier allows for gain and also buffers the input from any high impedance sources.*

This circuit shows that some headroom will be lost due to the amplifier output not being able to swing all the way to the rail. An example would be for an output swing of 0V to 5V. This limitation can be overcome by supplying a V_{REF} that is slightly less than the common mode voltage. Using a 2.048V reference for the A/D converter, while biasing the input signal at 2.5V solves the problem. This circuit is shown in Figure 5-6.

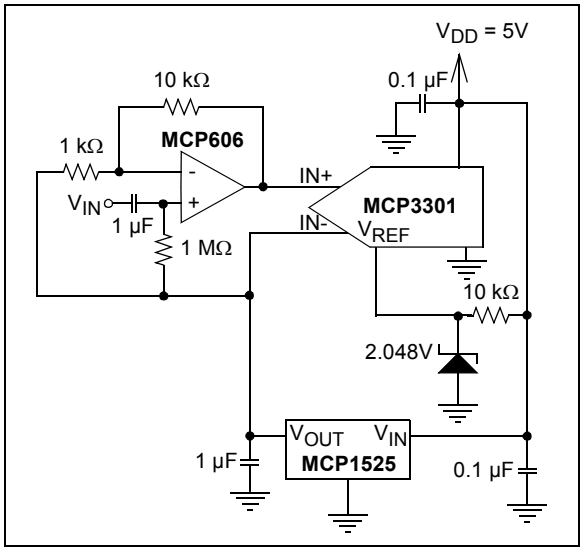

FIGURE 5-6: *Circuit solution to overcome amplifier output swing limitation.*

5.4 Common Mode Input Range

The *common mode input range* has no restriction and is equal to the absolute input voltage range: V_{SS} -0.3V to V_{DD} + 0.3V. However, for a given V_{REF}, the common mode voltage has a limited swing if the entire range of the A/D converter is to be used. Figure 5-7 and Figure 5-8 show the relationship between V_{REF} and the common mode voltage. A smaller V_{REF} allows for wider flexibility in a common mode voltage. V_{REF} levels, down to 400 mV, exhibit less than 0.1 LSB change in INL and DNL.

For characterization graphs that show this performance relationship, see Figure 2-2 and Figure 2-6.

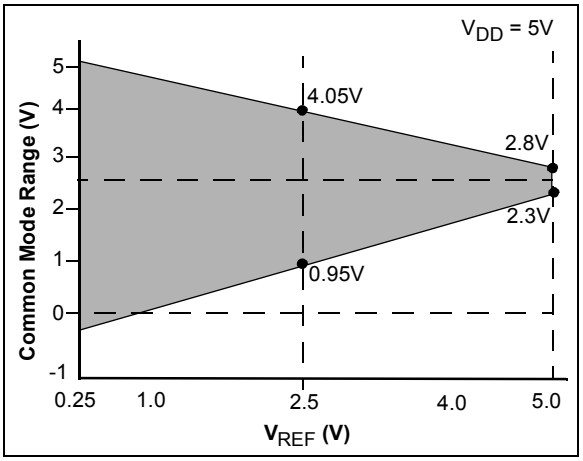

FIGURE 5-7: *Common Mode Range of Full Differential input signal versus V_{REF}.*

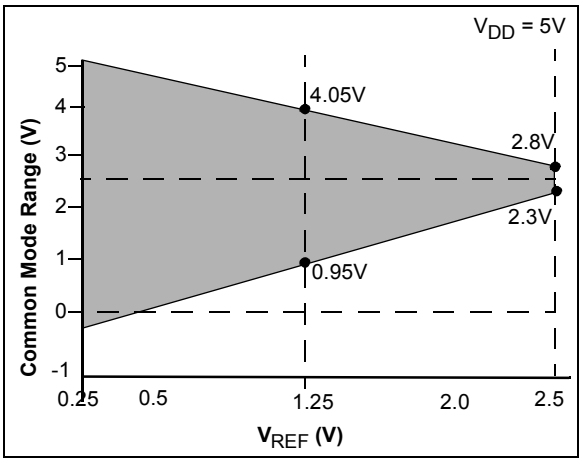

FIGURE 5-8: *Common Mode Range versus V_{REF} for Pseudo Differential Input.*

© 2001-2011 Microchip Technology Inc.

5.5 Buffering/Filtering the Analog Inputs

Inaccurate conversion results may occur if the signal source for the A/D converter is not a low impedance source. Buffering the input will solve the impedance issue. It is also recommended that an analog filter be used to eliminate any signals that may be aliased back into the conversion results. Using an op amp to drive the analog input of the MCP3301 is illustrated in Figure 5-9. This amplifier provides a low impedance source for the converter input and low pass filter, which eliminates unwanted high frequency noise. Values shown are for a 10 Hz Butterworth Low pass filter.

Low pass (anti-aliasing) filters can be designed using Microchip's interactive FilterLab® software. FilterLab will calculate capacitor and resistor values as well as determine the number of poles that are required for the application. For more information on filtering signals, see AN-699 *"Anti-Aliasing Analog Filters for Data Acquisition Systems*".

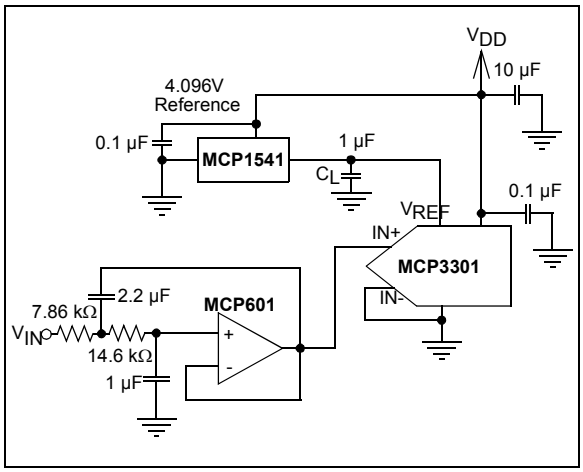

FIGURE 5-9: *The MCP601 Operational Amplifier is used to implement a 2nd order anti-aliasing filter for the signal being converted by the MCP3301.*

5.6 Layout Considerations

When laying out a printed circuit board for use with analog components, care should be taken to reduce noise wherever possible. A bypass capacitor from V_{DD} to ground should always be used with this device and should be placed as close as possible to the device pin. A bypass capacitor value of 0.1 µF is recommended.

Digital and analog traces should be separated as much as possible on the board with no traces running underneath the device or bypass capacitor. Extra precautions should be taken to keep traces with high frequency signals (such as clock lines) as far as possible from analog traces.

Use of an analog ground plane is recommended in order to keep the ground potential the same for all devices on the board. Providing V_{DD} connections to devices in a "star" configuration can also reduce noise by eliminating current return paths and associated errors (Figure 5-10). For more information on layout tips when using the MCP3301 or other ADC devices, refer to AN-688 *"Layout Tips for 12-Bit A/D Converter Applications"*.

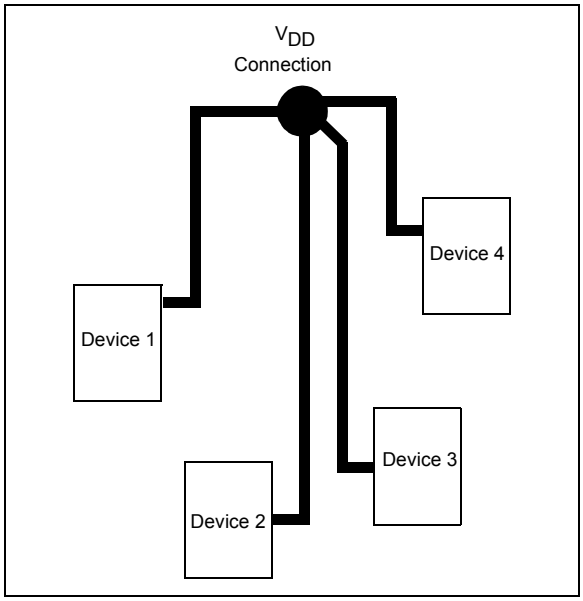

FIGURE 5-10: *V_{DD} traces arranged in a 'Star' configuration in order to reduce errors caused by current return paths.MCP3301*

6.0 SERIAL COMMUNICATIONS

6.1 Output Code Format

The output code format is a binary two's complement scheme with a leading sign bit that indicates the sign of the output. If the IN+ input is higher than the IN- input, the sign bit will be a zero. If the IN- input is higher, the sign bit will be a '1'.

The diagram shown in Figure 6-1 shows the output code transfer function. In this diagram, the horizontal axis is the analog input voltage and the vertical axis is the output code of the ADC. It shows that when IN+ is equal to IN-, both the sign bit and the data word are zero. As IN+ gets larger, with respect to IN-, the sign bit is a zero and the data word gets larger. The full scale output code is reached at +4095 when the input [(IN+) - (IN-)] reaches V_{REF} - 1 LSB. When IN- is larger than IN+, the two's complement output codes will be seen with the sign bit being a one. Some examples of analog input levels and corresponding output codes are shown in Table 6-1.

TABLE 6-1: BINARY TWO'S COMPLEMENT OUTPUT CODE EXAMPLES.

Analog Input Levels		Sign Bit	Binary Data	Decimal DATA
Full Scale Positive	(IN+)-(IN-) = V_{REF}-1 LSB	0	1111 1111 1111	+4095
	(IN+)-(IN-) = V_{REF}-2 LSB	0	1111 1111 1110	+4094
	IN+ = (IN-) +2 LSB	0	0000 0000 0010	+2
	IN+ = (IN-) +1 LSB	0	0000 0000 0001	+1
	IN+ = IN-	0	0000 0000 0000	0
	IN+ = (IN-) - 1 LSB	1	1111 1111 1111	-1
	IN+ = (IN-) - 2 LSB	1	1111 1111 1110	-2
	$IN^+ - IN^- = V_{REF}$+1 LSB	1	0000 0000 0001	-4095
Full Scale Negative	$IN^+ - IN^- = -V_{REF}$	1	0000 0000 0000	-4096

© 2001-2011 Microchip Technology Inc.

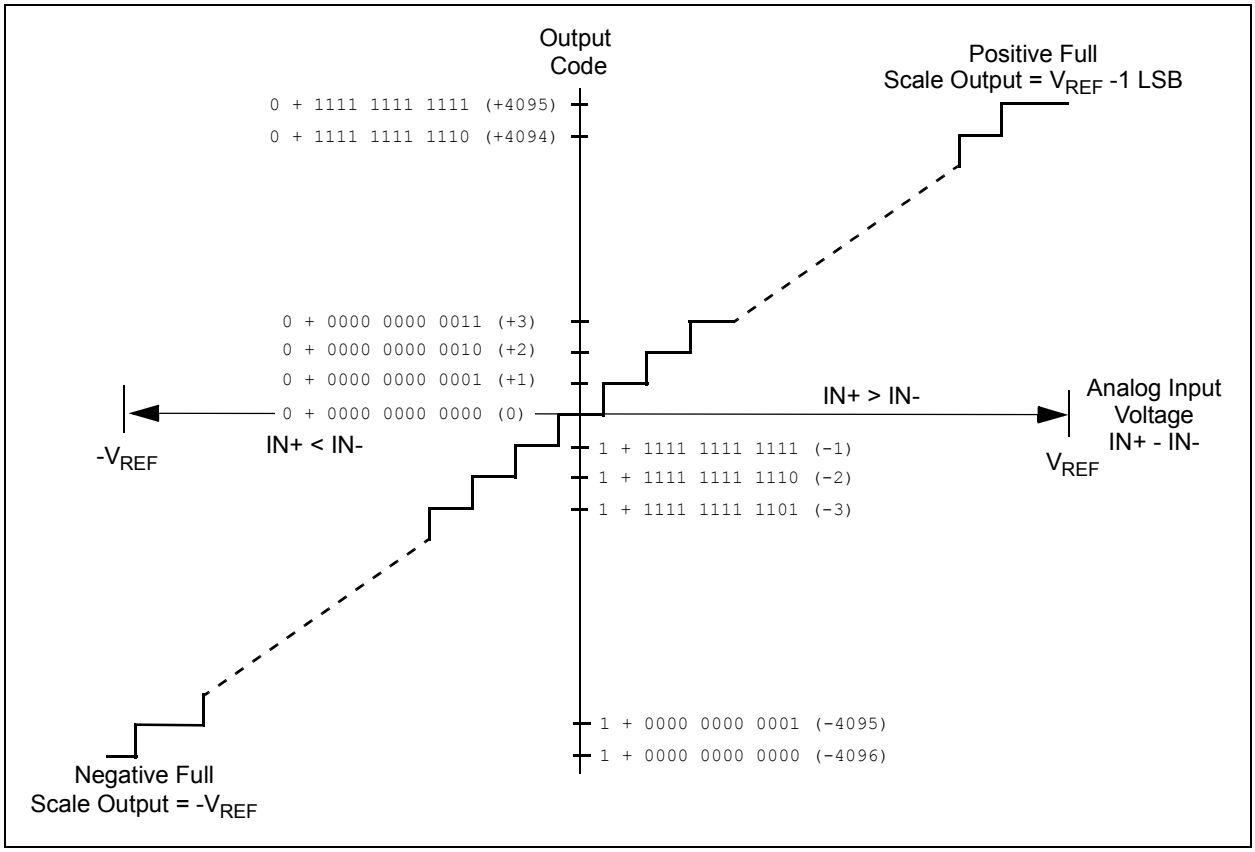

FIGURE 6-1: *Output Code Transfer Function.*

6.2 Communicating with the MCP3301

Communication with the device is completed using a standard SPI compatible serial interface. Initiating communication with the MCP3301 begins with the $\overline{CS}$ going low. If the device was powered up with the $\overline{CS}$ pin low, it must be brought high and back low to initiate communication. The device will begin to sample the analog input on the first rising edge of CLK after $\overline{CS}$ goes low. The sample period will end in the falling edge of the second clock, at which time the device will output a low null bit. The next 13 clocks will output the result of the conversion with the sign bit first, followed by the 12 remaining data bits, as shown in Figure 6-2. Data is always output from the device on the falling edge of the clock. If all 13 data bits have been transmitted and the device continues to receive clocks while the $\overline{CS}$ is held low, the device will output the conversion result LSB first, as shown in Figure 6-3. If more clocks are provided to the device while $\overline{CS}$ is still low (after the LSB first data has been transmitted), the device will clock out zeros indefinitely.

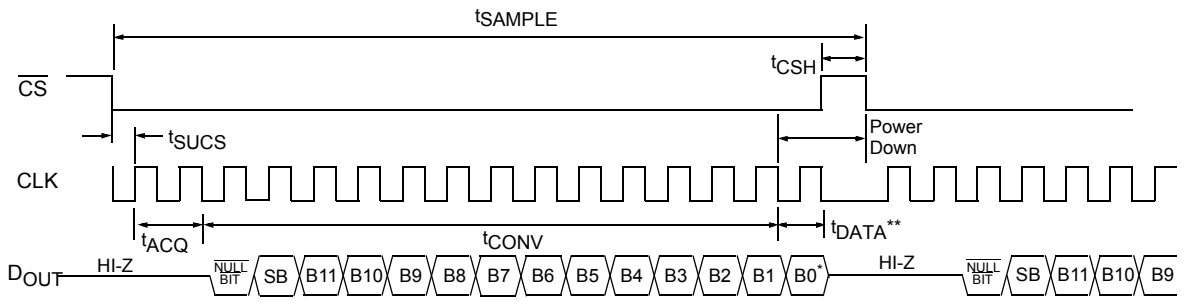

* After completing the data transfer, if further clocks are applied with $\overline{CS}$ low, the ADC will output LSB first data, followed by zeros indefinitely. See Figure 6-2 below.

** t_{DATA}: during this time, the bias current and the comparator power down and the reference input becomes a high impedance node, leaving the CLK running to clock out the LSB-first data or zeros.

FIGURE 6-2: *Communication with MCP3301 (MSB first Format).*

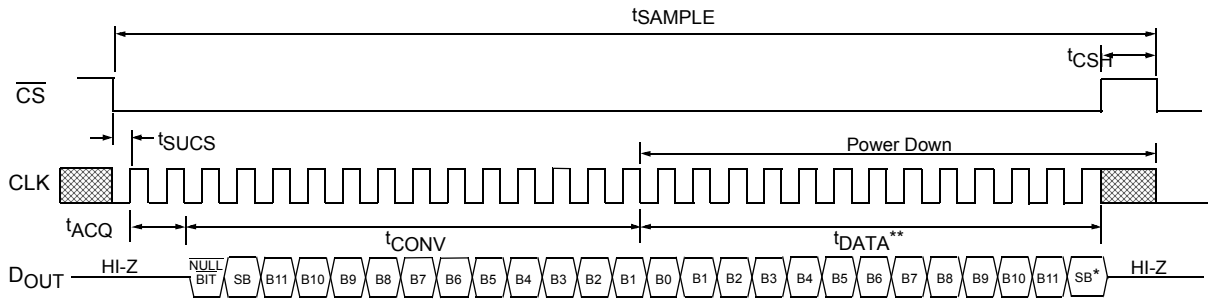

* After completing the data transfer, if further clocks are applied with $\overline{CS}$ low, the ADC will output zeros indefinitely.

** t_{DATA}: during this time, the bias current and the comparator power down and the reference input becomes a high impedance node, leaving the CLK running to clock out the LSB-first data or zeros.

FIGURE 6-3: *Communication with MCP3301 (LSB first Format).*

© 2001-2011 Microchip Technology Inc.

6.3 Using the MCP3301 with Microcontroller (MCU) SPI Ports

With most microcontroller SPI ports, it is required to clock out eight bits at a time. Using a hardware SPI port with the MCP3301 is very easy because each conversion requires 16 clocks. For example, Figure 6-4 and Figure 6-5 show how the MCP3301 can be interfaced to a microcontroller with a standard SPI port. Since the MCP3301 always clocks data out on the falling edge of clock, the MCU SPI port must be configured to match this operation. SPI Mode 0,0 (clock idles low) and SPI Mode 1,1 (clock idles high) are both compatible with the MCP3301. Figure 6-4 depicts the operation shown in SPI Mode 0,0, which requires that the CLK from the microcontroller idles in the 'low' state. As shown in the diagram, the sign bit is clocked out of the ADC on the falling edge of the third clock pulse, followed by the remaining 12 data bits (MSB first). Once the first eight clocks have been sent to the device, the microcontroller's receive buffer will contain two unknown bits (for the first two clocks, the output is high impedance), followed by the null bit, the sign bit and the highest order four bits of the conversion. After the second eight clocks have been sent to the device, the MCU receive register will contain the lowest order 8 data bits. Notice that, on the falling edge of clock 16, the ADC has begun to shift out LSB first data.

Figure 6-5 shows the same scenario in SPI Mode 1,1, which requires that the clock idles in the high state. As with mode 0,0, the ADC outputs data on the falling edge of the clock and the MCU latches data from the ADC in on the rising edge of the clock.

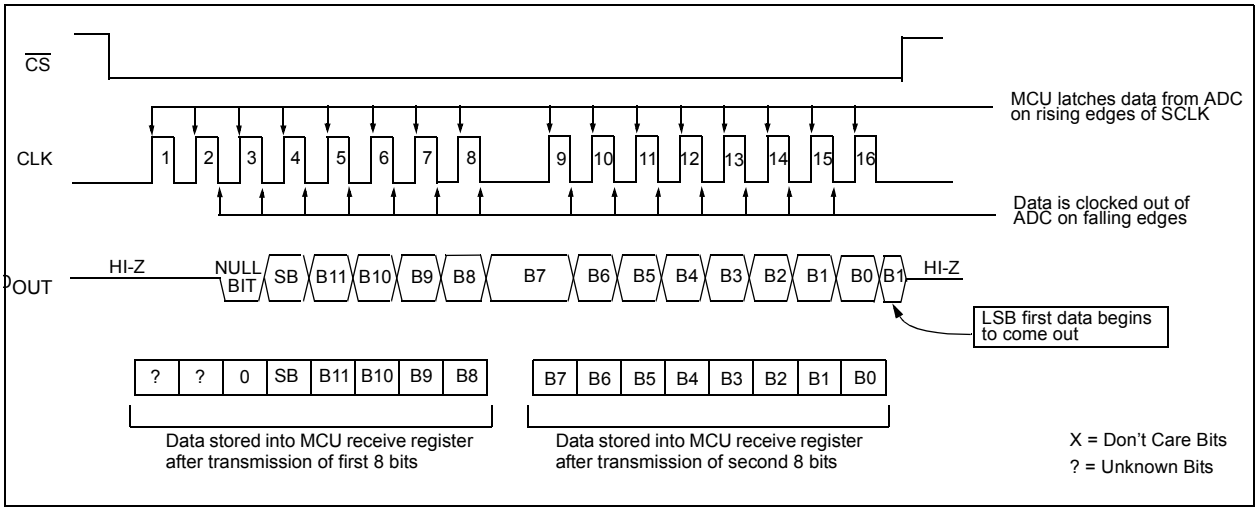

FIGURE 6-4: *SPI Communication with the MCP3301 using 8-bit segments (Mode 0,0: SCLK idles low).*

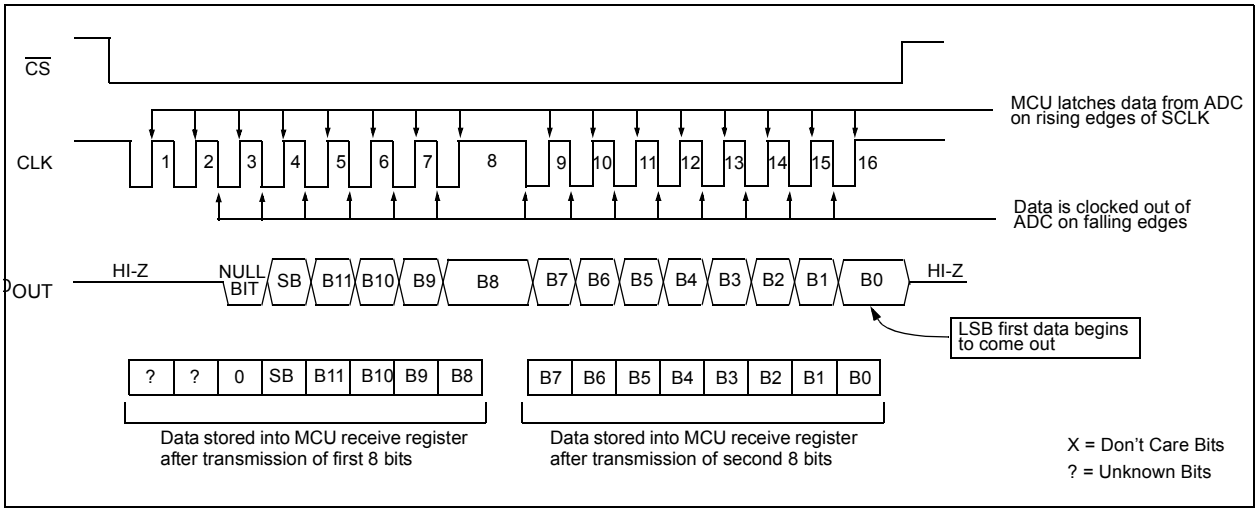

FIGURE 6-5: *SPI Communication with the MCP3301 using 8-bit segments (Mode 1,1: SCLK idles high).*

7.0 PACKAGING INFORMATION

7.1 Package Marking Information

8-Lead MSOP (3x3 mm)

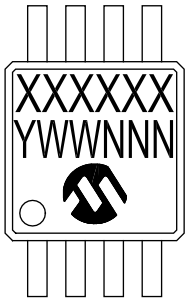

Example

8-Lead PDIP (300 mil)

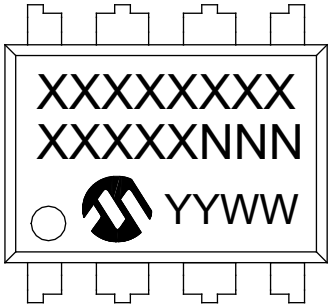

Example

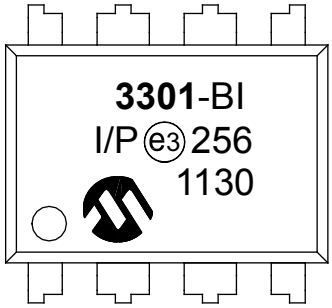

8-Lead SOIC (3.90 mm)

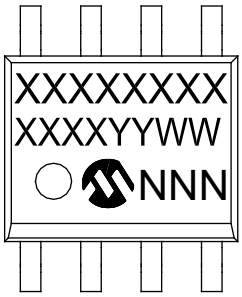

Example

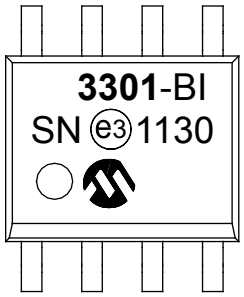

Legend:	XX...X	Customer-specific information
	Y	Year code (last digit of calendar year)
	YY	Year code (last 2 digits of calendar year)
	WW	Week code (week of January 1 is week ‘01’)
	NNN	Alphanumeric traceability code
	e3	Pb-free JEDEC designator for Matte Tin (Sn)
	*	This package is Pb-free. The Pb-free JEDEC designator (e3) can be found on the outer packaging for this package.

Note: In the event the full Microchip part number cannot be marked on one line, it will be carried over to the next line, thus limiting the number of available characters for customer-specific information.

© 2001-2011 Microchip Technology Inc.

8-Lead Plastic Micro Small Outline Package (MS) [MSOP]

Note: For the most current package drawings, please see the Microchip Packaging Specification located at http://www.microchip.com/packaging

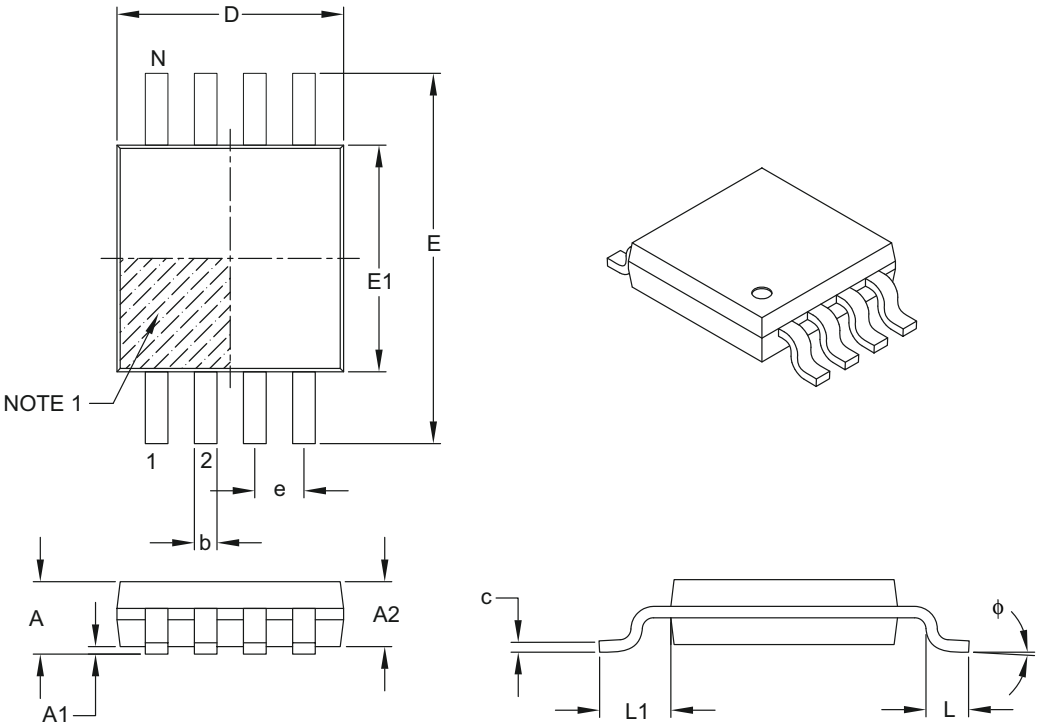

Units		MILLIMETERS		
Dimension Limits		MIN	NOM	MAX
Number of Pins	N	8		
Pitch	e	0.65 BSC		
Overall Height	A	–	–	1.10
Molded Package Thickness	A2	0.75	0.85	0.95
Standoff	A1	0.00	–	0.15
Overall Width	E	4.90 BSC		
Molded Package Width	E1	3.00 BSC		
Overall Length	D	3.00 BSC		
Foot Length	L	0.40	0.60	0.80
Footprint	L1	0.95 REF		
Foot Angle	ϕ	0°	–	8°
Lead Thickness	c	0.08	–	0.23
Lead Width	b	0.22	–	0.40

Notes:

1. Pin 1 visual index feature may vary, but must be located within the hatched area.
2. Dimensions D and E1 do not include mold flash or protrusions. Mold flash or protrusions shall not exceed 0.15 mm per side.
3. Dimensioning and tolerancing per ASME Y14.5M.

   BSC: Basic Dimension. Theoretically exact value shown without tolerances.

   REF: Reference Dimension, usually without tolerance, for information purposes only.

Microchip Technology Drawing C04-111B

8-Lead Plastic Micro Small Outline Package (MS) [MSOP]

Note: For the most current package drawings, please see the Microchip Packaging Specification located at http://www.microchip.com/packaging

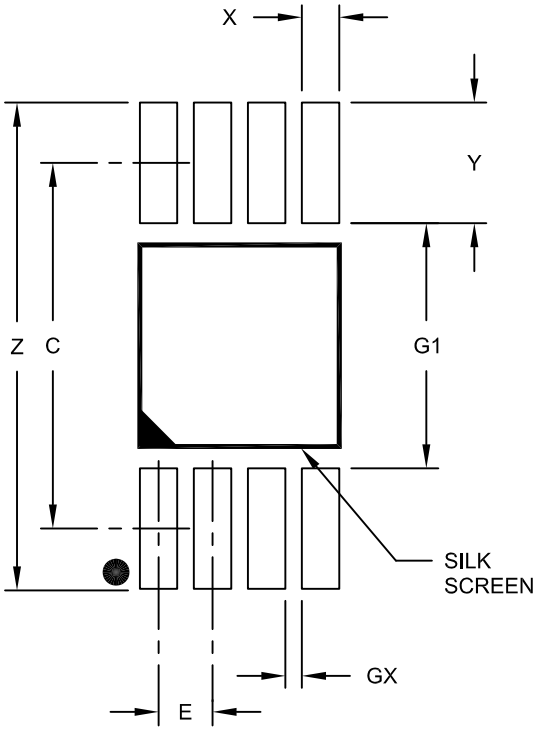

RECOMMENDED LAND PATTERN

Units		MILLIMETERS		
Dimension Limits		MIN	NOM	MAX
Contact Pitch	E		0.65 BSC	
Contact Pad Spacing	C		4.40	
Overall Width	Z			5.85
Contact Pad Width (X8)	X1			0.45
Contact Pad Length (X8)	Y1			1.45
Distance Between Pads	G1	2.95		
Distance Between Pads	GX	0.20		

Notes:

1. Dimensioning and tolerancing per ASME Y14.5M

BSC: Basic Dimension. Theoretically exact value shown without tolerances.

Microchip Technology Drawing No. C04-2111A

© 2001-2011 Microchip Technology Inc.

8-Lead Plastic Dual In-Line (P) – 300 mil Body [PDIP]

Note: For the most current package drawings, please see the Microchip Packaging Specification located at http://www.microchip.com/packaging

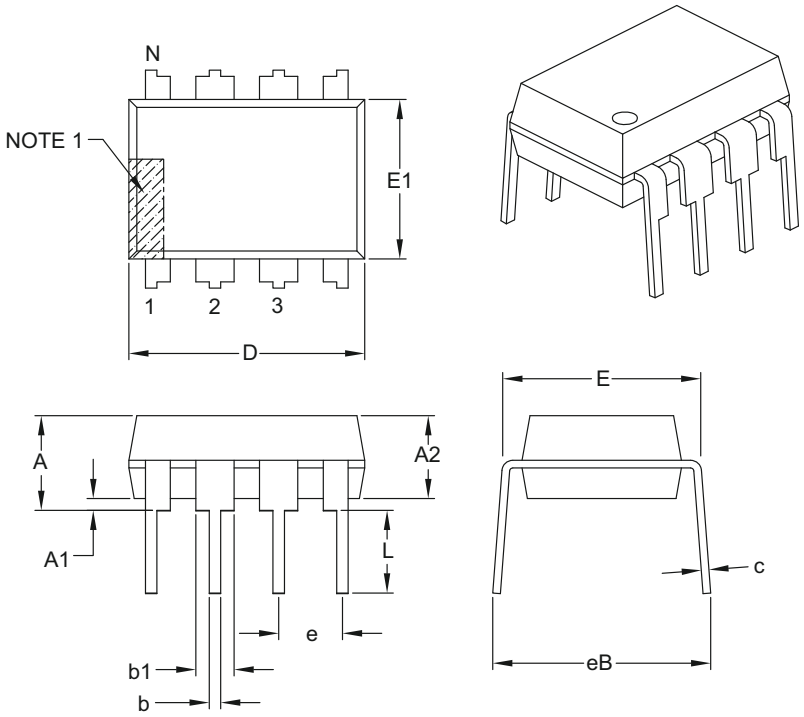

Units		INCHES		
Dimension Limits		MIN	NOM	MAX
Number of Pins	N	8		
Pitch	e	.100 BSC		
Top to Seating Plane	A	–	–	.210
Molded Package Thickness	A2	.115	.130	.195
Base to Seating Plane	A1	.015	–	–
Shoulder to Shoulder Width	E	.290	.310	.325
Molded Package Width	E1	.240	.250	.280
Overall Length	D	.348	.365	.400
Tip to Seating Plane	L	.115	.130	.150
Lead Thickness	c	.008	.010	.015
Upper Lead Width	b1	.040	.060	.070
Lower Lead Width	b	.014	.018	.022
Overall Row Spacing §	eB	–	–	.430

Notes:

1. Pin 1 visual index feature may vary, but must be located with the hatched area.
2. § Significant Characteristic.
3. Dimensions D and E1 do not include mold flash or protrusions. Mold flash or protrusions shall not exceed .010" per side.
4. Dimensioning and tolerancing per ASME Y14.5M.
   BSC: Basic Dimension. Theoretically exact value shown without tolerances.

Microchip Technology Drawing C04-018B

8-Lead Plastic Small Outline (SN) - Narrow, 3.90 mm Body [SOIC]

Note:	For the most current package drawings, please see the Microchip Packaging Specification located at http://www.microchip.com/packaging

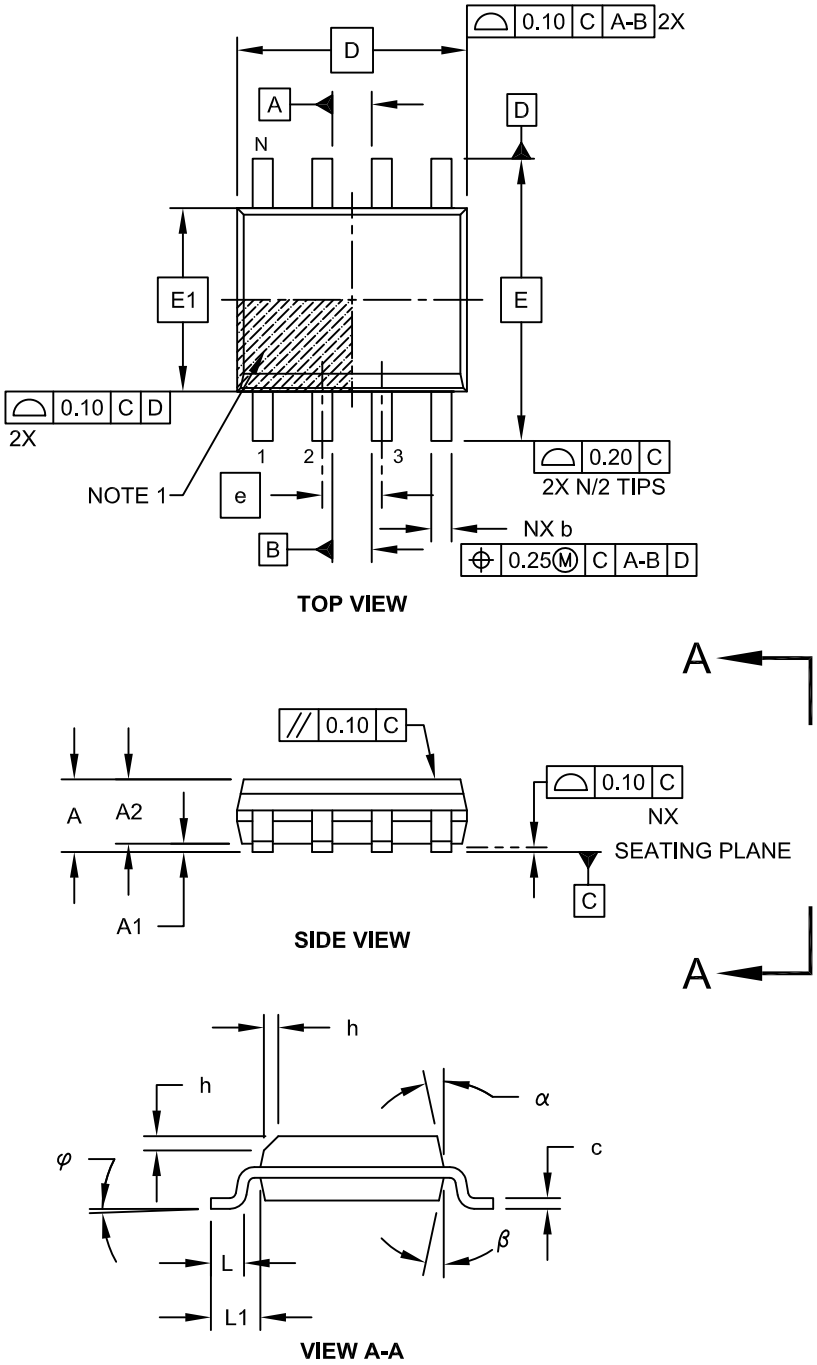

Microchip Technology Drawing No. C04-057C Sheet 1 of 2

© 2001-2011 Microchip Technology Inc.

8-Lead Plastic Small Outline (SN) - Narrow, 3.90 mm Body [SOIC]

Note: For the most current package drawings, please see the Microchip Packaging Specification located at http://www.microchip.com/packaging

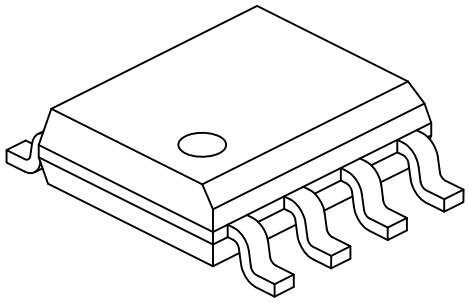

Units		MILLIMETERS		
Dimension Limits		MIN	NOM	MAX
Number of Pins	N	8		
Pitch	e	1.27 BSC		
Overall Height	A	-	-	1.75
Molded Package Thickness	A2	1.25	-	-
Standoff §	A1	0.10	-	0.25
Overall Width	E	6.00 BSC		
Molded Package Width	E1	3.90 BSC		
Overall Length	D	4.90 BSC		
Chamfer (Optional)	h	0.25	-	0.50
Foot Length	L	0.40	-	1.27
Footprint	L1	1.04 REF		
Foot Angle	φ	0°	-	8°
Lead Thickness	c	0.17	-	0.25
Lead Width	b	0.31	-	0.51
Mold Draft Angle Top	α	5°	-	15°
Mold Draft Angle Bottom	β	5°	-	15°

Notes:

1. Pin 1 visual index feature may vary, but must be located within the hatched area.
2. § Significant Characteristic
3. Dimensions D and E1 do not include mold flash or protrusions. Mold flash or protrusions shall not exceed 0.15mm per side.
4. Dimensioning and tolerancing per ASME Y14.5M
   BSC: Basic Dimension. Theoretically exact value shown without tolerances.
   REF: Reference Dimension, usually without tolerance, for information purposes only.

Microchip Technology Drawing No. C04-057C Sheet 2 of 2

8-Lead Plastic Small Outline (SN) – Narrow, 3.90 mm Body [SOIC]

Note: For the most current package drawings, please see the Microchip Packaging Specification located at http://www.microchip.com/packaging

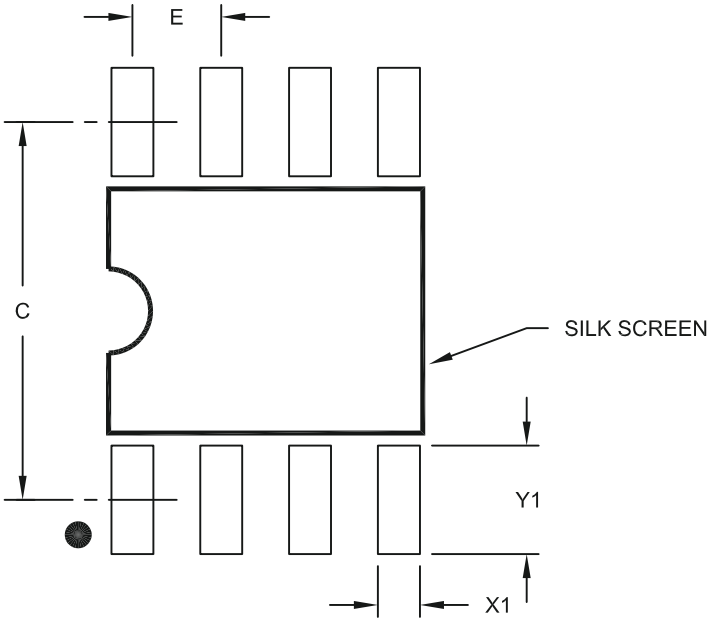

RECOMMENDED LAND PATTERN

Units		MILLIMETERS		
Dimension Limits		MIN	NOM	MAX
Contact Pitch	E	1.27 BSC		
Contact Pad Spacing	C		5.40	
Contact Pad Width (X8)	X1			0.60
Contact Pad Length (X8)	Y1			1.55

Notes:

1. Dimensioning and tolerancing per ASME Y14.5M
   BSC: Basic Dimension. Theoretically exact value shown without tolerances.

Microchip Technology Drawing No. C04-2057A

© 2001-2011 Microchip Technology Inc.

APPENDIX A: REVISION HISTORY

Revision E (November 2011)

Updated **Product Identification System**.

Corrected MSOP marking drawings.

Updated Package Specification Drawings with new additions.

Revision D (April 2011)

The following is the list of modifications:

1. Updated the content to illustrate that the devices now have tested specifications in the 4.5V to 5.5V supply range.
2. Removed figures 2-4 to 2-6, 2-10 to 2-12, 2-16 and 2-17.

Revision C (January 2007)

This revision includes updates to the packaging diagrams.

Revision B (February 2002)

Undocumented changes.

Revision A (December 2001)

Original Release of this Document.

PRODUCT IDENTIFICATION SYSTEM

To order or obtain information, e.g., on pricing or delivery, contact the local Microchip sales office.

PART NO.	X	X	/XX
Device	Grade	Temperature Range	Package

Device:	MCP3301:	13-Bit Serial A/D Converter
	MCP3301T:	13-Bit Serial A/D Converter (Tape and Reel)
Grade:	B =	±1 LSB INL
	C =	±2 LSB INL
Temperature Range:	I =	-40°C to +85°C
Package:	MS =	Plastic MSOP, 8-lead
	P =	Plastic DIP (300 mil Body), 8-lead
	SN =	Plastic SOIC (150 mil Body), 8-lead

Examples:

a) MCP3301-BI/P: ±1 LSB INL, Industrial Temperature, PDIP package

b) MCP3301-BI/SN: ±1 LSB INL, Industrial Temperature, SOIC package

c) MCP3301-CI/MS: ±2 LSB INL, Industrial Temperature, MSOP package

© 2001-2011 Microchip Technology Inc.

Note the following details of the code protection feature on Microchip devices:

- Microchip products meet the specification contained in their particular Microchip Data Sheet.
- Microchip believes that its family of products is one of the most secure families of its kind on the market today, when used in the intended manner and under normal conditions.
- There are dishonest and possibly illegal methods used to breach the code protection feature. All of these methods, to our knowledge, require using the Microchip products in a manner outside the operating specifications contained in Microchip's Data Sheets. Most likely, the person doing so is engaged in theft of intellectual property.
- Microchip is willing to work with the customer who is concerned about the integrity of their code.
- Neither Microchip nor any other semiconductor manufacturer can guarantee the security of their code. Code protection does not mean that we are guaranteeing the product as "unbreakable."

Code protection is constantly evolving. We at Microchip are committed to continuously improving the code protection features of our products. Attempts to break Microchip's code protection feature may be a violation of the Digital Millennium Copyright Act. If such acts allow unauthorized access to your software or other copyrighted work, you may have a right to sue for relief under that Act.

Information contained in this publication regarding device applications and the like is provided only for your convenience and may be superseded by updates. It is your responsibility to ensure that your application meets with your specifications. MICROCHIP MAKES NO REPRESENTATIONS OR WARRANTIES OF ANY KIND WHETHER EXPRESS OR IMPLIED, WRITTEN OR ORAL, STATUTORY OR OTHERWISE, RELATED TO THE INFORMATION, INCLUDING BUT NOT LIMITED TO ITS CONDITION, QUALITY, PERFORMANCE, MERCHANTABILITY OR FITNESS FOR PURPOSE. Microchip disclaims all liability arising from this information and its use. Use of Microchip devices in life support and/or safety applications is entirely at the buyer's risk, and the buyer agrees to defend, indemnify and hold harmless Microchip from any and all damages, claims, suits, or expenses resulting from such use. No licenses are conveyed, implicitly or otherwise, under any Microchip intellectual property rights.

Trademarks

The Microchip name and logo, the Microchip logo, dsPIC, KEELOQ, KEELOQ logo, MPLAB, PIC, PICmicro, PICSTART, PIC32 logo, rfPIC and UNI/O are registered trademarks of Microchip Technology Incorporated in the U.S.A. and other countries.

FilterLab, Hampshire, HI-TECH C, Linear Active Thermistor, MXDEV, MXLAB, SEEVAL and The Embedded Control Solutions Company are registered trademarks of Microchip Technology Incorporated in the U.S.A.

Analog-for-the-Digital Age, Application Maestro, chipKIT, chipKIT logo, CodeGuard, dsPICDEM, dsPICDEM.net, dsPICworks, dsSPEAK, ECAN, ECONOMONITOR, FanSense, HI-TIDE, In-Circuit Serial Programming, ICSP, Mindi, MiWi, MPASM, MPLAB Certified logo, MPLIB, MPLINK, mTouch, Omniscient Code Generation, PICC, PICC-18, PICDEM, PICDEM.net, PICkit, PICtail, REAL ICE, rfLAB, Select Mode, Total Endurance, TSHARC, UniWinDriver, WiperLock and ZENA are trademarks of Microchip Technology Incorporated in the U.S.A. and other countries.

SQTP is a service mark of Microchip Technology Incorporated in the U.S.A.

All other trademarks mentioned herein are property of their respective companies.

© 2001-2011, Microchip Technology Incorporated, Printed in the U.S.A., All Rights Reserved.

Printed on recycled paper.

ISBN: 978-1-61341-756-0

QUALITY MANAGEMENT SYSTEM
CERTIFIED BY DNV
ISO/TS 16949:2009

Microchip received ISO/TS-16949:2009 certification for its worldwide headquarters, design and wafer fabrication facilities in Chandler and Tempe, Arizona; Gresham, Oregon and design centers in California and India. The Company's quality system processes and procedures are for its PIC® MCUs and dsPIC® DSCs, KEELOQ® code hopping devices, Serial EEPROMs, microperipherals, nonvolatile memory and analog products. In addition, Microchip's quality system for the design and manufacture of development systems is ISO 9001:2000 certified.

Worldwide Sales and Service

AMERICAS

Corporate Office
2355 West Chandler Blvd.
Chandler, AZ 85224-6199
Tel: 480-792-7200
Fax: 480-792-7277
Technical Support:
http://www.microchip.com/support
Web Address:
www.microchip.com

Atlanta
Duluth, GA
Tel: 678-957-9614
Fax: 678-957-1455

Boston
Westborough, MA
Tel: 774-760-0087
Fax: 774-760-0088

Chicago
Itasca, IL
Tel: 630-285-0071
Fax: 630-285-0075

Cleveland
Independence, OH
Tel: 216-447-0464
Fax: 216-447-0643

Dallas
Addison, TX
Tel: 972-818-7423
Fax: 972-818-2924

Detroit
Farmington Hills, MI
Tel: 248-538-2250
Fax: 248-538-2260

Indianapolis
Noblesville, IN
Tel: 317-773-8323
Fax: 317-773-5453

Los Angeles
Mission Viejo, CA
Tel: 949-462-9523
Fax: 949-462-9608

Santa Clara
Santa Clara, CA
Tel: 408-961-6444
Fax: 408-961-6445

Toronto
Mississauga, Ontario, Canada
Tel: 905-673-0699
Fax: 905-673-6509

ASIA/PACIFIC

Asia Pacific Office
Suites 3707-14, 37th Floor
Tower 6, The Gateway
Harbour City, Kowloon
Hong Kong
Tel: 852-2401-1200
Fax: 852-2401-3431

Australia - Sydney
Tel: 61-2-9868-6733
Fax: 61-2-9868-6755

China - Beijing
Tel: 86-10-8569-7000
Fax: 86-10-8528-2104

China - Chengdu
Tel: 86-28-8665-5511
Fax: 86-28-8665-7889

China - Chongqing
Tel: 86-23-8980-9588
Fax: 86-23-8980-9500

China - Hangzhou
Tel: 86-571-2819-3187
Fax: 86-571-2819-3189

China - Hong Kong SAR
Tel: 852-2401-1200
Fax: 852-2401-3431

China - Nanjing
Tel: 86-25-8473-2460
Fax: 86-25-8473-2470

China - Qingdao
Tel: 86-532-8502-7355
Fax: 86-532-8502-7205

China - Shanghai
Tel: 86-21-5407-5533
Fax: 86-21-5407-5066

China - Shenyang
Tel: 86-24-2334-2829
Fax: 86-24-2334-2393

China - Shenzhen
Tel: 86-755-8203-2660
Fax: 86-755-8203-1760

China - Wuhan
Tel: 86-27-5980-5300
Fax: 86-27-5980-5118

China - Xian
Tel: 86-29-8833-7252
Fax: 86-29-8833-7256

China - Xiamen
Tel: 86-592-2388138
Fax: 86-592-2388130

China - Zhuhai
Tel: 86-756-3210040
Fax: 86-756-3210049

ASIA/PACIFIC

India - Bangalore
Tel: 91-80-3090-4444
Fax: 91-80-3090-4123

India - New Delhi
Tel: 91-11-4160-8631
Fax: 91-11-4160-8632

India - Pune
Tel: 91-20-2566-1512
Fax: 91-20-2566-1513

Japan - Yokohama
Tel: 81-45-471- 6166
Fax: 81-45-471-6122

Korea - Daegu
Tel: 82-53-744-4301
Fax: 82-53-744-4302

Korea - Seoul
Tel: 82-2-554-7200
Fax: 82-2-558-5932 or
82-2-558-5934

Malaysia - Kuala Lumpur
Tel: 60-3-6201-9857
Fax: 60-3-6201-9859

Malaysia - Penang
Tel: 60-4-227-8870
Fax: 60-4-227-4068

Philippines - Manila
Tel: 63-2-634-9065
Fax: 63-2-634-9069

Singapore
Tel: 65-6334-8870
Fax: 65-6334-8850

Taiwan - Hsin Chu
Tel: 886-3-5778-366
Fax: 886-3-5770-955

Taiwan - Kaohsiung
Tel: 886-7-536-4818
Fax: 886-7-330-9305

Taiwan - Taipei
Tel: 886-2-2500-6610
Fax: 886-2-2508-0102

Thailand - Bangkok
Tel: 66-2-694-1351
Fax: 66-2-694-1350

EUROPE

Austria - Wels
Tel: 43-7242-2244-39
Fax: 43-7242-2244-393

Denmark - Copenhagen
Tel: 45-4450-2828
Fax: 45-4485-2829

France - Paris
Tel: 33-1-69-53-63-20
Fax: 33-1-69-30-90-79

Germany - Munich
Tel: 49-89-627-144-0
Fax: 49-89-627-144-44

Italy - Milan
Tel: 39-0331-742611
Fax: 39-0331-466781

Netherlands - Drunen
Tel: 31-416-690399
Fax: 31-416-690340

Spain - Madrid
Tel: 34-91-708-08-90
Fax: 34-91-708-08-91

UK - Wokingham
Tel: 44-118-921-5869
Fax: 44-118-921-5820

08/02/11

© 2001-2011 Microchip Technology Inc.

Мы молодая и активно развивающаяся компания в области поставок электронных компонентов. Мы поставляем электронные компоненты отечественного и импортного производства напрямую от производителей и с крупнейших складов мира.

Благодаря сотрудничеству с мировыми поставщиками мы осуществляем комплексные и плановые поставки широчайшего спектра электронных компонентов.

Собственная эффективная логистика и склад в обеспечивает надежную поставку продукции в точно указанные сроки по всей России.

Мы осуществляем техническую поддержку нашим клиентам и предпродажную проверку качества продукции. На все поставляемые продукты мы предоставляем гарантию .

Осуществляем поставки продукции под контролем ВП МО РФ на предприятия военно-промышленного комплекса России , а также работаем в рамках 275 ФЗ с открытием отдельных счетов в уполномоченном банке. Система менеджмента качества компании соответствует требованиям ГОСТ ISO 9001.

Минимальные сроки поставки, гибкие цены, неограниченный ассортимент и индивидуальный подход к клиентам являются основой для выстраивания долгосрочного и эффективного сотрудничества с предприятиями радиоэлектронной промышленности, предприятиями ВПК и научно-исследовательскими институтами России.

С нами вы становитесь еще успешнее!

Наши контакты:

Телефон: +7 812 627 14 35

Электронная почта: sales@st-electron.ru

Адрес: 198099, Санкт-Петербург, Промышленная ул, дом № 19, литера Н, помещение 100-Н Офис 331