CX25870/871

Video Encoder with Adaptive Flicker Filtering and HDTV Output

Conexant's CX25870/871 is specifically designed to meet TV out system requirements for the next-generation desktop PCs, notebook PCs, game consoles and set-top boxes. With pin and software-forward compatibility to the Bt868/869, manufacturers can quickly bring to market new solutions that support adaptive flicker filtering, ATSC High-Definition Television (HDTV) output, and resolutions from 320 x 200 (minimum) to 1024 x 768 (maximum).

Adaptive flicker filtering is a Conexant technology in which the encoder looks at the characteristics of the video content on a pixel-by-pixel basis and automatically determines the optimal amount of flicker filtering required. If an end-user wants to work on a spreadsheet while watching a DVD movie in a window, both the text-intensive application requiring a lot of flicker filtering and the DVD movie requiring very little flicker filtering can look their best. The amount of flicker filtering and overscan compensation is entirely flexible.

The CX25870/871 also provides a 3-wire analog RGB or YP_RP_B HDTV output. While the encoder is in HDTV output mode, the device will automatically insert horizontal tri-level synchronization pulses and vertical synchronization broad pulses. The CX25870/871 is compliant with the EIA770-3, SMPTE 274M/293M/296M standards and supports ATSC HDTV resolutions including 480p, 720p, and 1080i.

All worldwide standard definition outputs are supported, including NTSC-M (N. America, Taiwan), NTSC-J (Japan), PAL-B,D,G,H,I (Europe, Asia), PAL-M (Brazil), PAL-N (Uruguay, Paraguay), PAL-Nc (Argentina), PAL-60 (China) and SECAM. The CX25870 and CX25871 are functionally identical, except the CX25871 can output standard definition video with Macrovision Level 7.1.L1 copy protection capability.

Functional Block Diagram

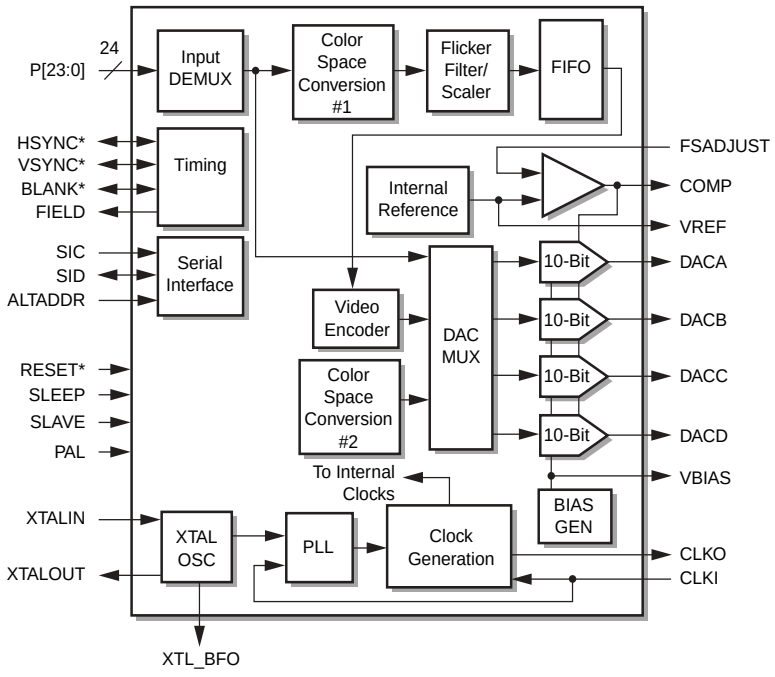

Distinguishing Features

- HDTV Output Mode (patents pending)
  - Compliant with EIA770-3 and SMPTE274M/293M/296M standards
  - Automatic tri-level sync generation
  - Component (YP_RP_B) or RGB HDTV outputs
  - Direct YP_RP_B or RGB output from progressive RGB graphics video in 1080i, 720p, 480p ATSC resolutions
- Software and register forward-compatibility with the Bt868/869
- Ability to accept many different input data formats:
  - 15/16/24-bit RGB multiplexed or nonmultiplexed
  - 16-bit 4:2:2 and 24-bit 4:4:4 YCrCb multiplexed or nonmultiplexed
  - Flexible pixel ordering with various alternate formats
- Worldwide video output support: NTSC-M, J, 4.43, PAL-B, D, G, H, I, M, N, Nc, 60, and SECAM
- Interlaced and noninterlaced outputs
- S-Video output (simultaneous with composite NTSC, PAL, or SECAM)
- SCART RGB or Y/C output for Europe
  - 4th DAC is composite video
  - EN50-049 and IEC 933-1 compliant
- 5-Line vertical filtering scaling for overscan compensation and flicker reduction
- Adaptive Flicker Filtering for enhanced image and peaking filters for text sharpness (patents pending)
- CCIR601/ITU-RBT.601 (i.e., 480i) and CCIR656 compatible input modes
- Luma and chroma comb filtering
- 4 x 10-bit DACs
- Programmable power management
- Master, pseudo-master or slave timing operation
- Auto detection of TV
- 44 autoconfiguration modes
- Wide-Screen Signaling (WSS) support for variable clock rates
  - Adheres to EIAJ CPR-1024 and ITU-R TST.1119-1 standards
- Full register set readback capability
- 3.3 V operation with scalable low voltage graphic controller interface from 1.8 V to 1.1 V
- Buffered crystal clock output pin
- Component YUV analog output
- Colorstream ™ (EIA 770.2) and Super Colorstream ™ component video outputs
- Macrovision 7.1.L1 copy protection (CX25871)
- Compact 80-pin PQFP package

Ordering Information

Model Number	Package	Ambient Temperature Range
CX25870	80-pin PQFP	0 °C – 70 °C
CX25871[1]	80-pin PQFP	0 °C – 70 °C

NOTE(S):
1. Macrovision 7.1.L1 compliant (customer must possess Macrovision license to purchase CX25871).

© 2001, Conexant Systems, Inc.
All Rights Reserved.

Information in this document is provided in connection with Conexant Systems, Inc. (“Conexant”) products. These materials are provided by Conexant as a service to its customers and may be used for informational purposes only. Conexant assumes no responsibility for errors or omissions in these materials. Conexant may make changes to specifications and product descriptions at any time, without notice. Conexant makes no commitment to update the information and shall have no responsibility whatsoever for conflicts or incompatibilities arising from future changes to its specifications and product descriptions.

No license, express or implied, by estoppel or otherwise, to any intellectual property rights is granted by this document. Except as provided in Conexant’s Terms and Conditions of Sale for such products, Conexant assumes no liability whatsoever.

THESE MATERIALS ARE PROVIDED “AS IS” WITHOUT WARRANTY OF ANY KIND, EITHER EXPRESS OR IMPLIED, RELATING TO SALE AND/OR USE OF CONEXANT PRODUCTS INCLUDING LIABILITY OR WARRANTIES RELATING TO FITNESS FOR A PARTICULAR PURPOSE, CONSEQUENTIAL OR INCIDENTAL DAMAGES, MERCHANTABILITY, OR INFRINGEMENT OF ANY PATENT, COPYRIGHT OR OTHER INTELLECTUAL PROPERTY RIGHT. CONEXANT FURTHER DOES NOT WARRANT THE ACCURACY OR COMPLETENESS OF THE INFORMATION, TEXT, GRAPHICS OR OTHER ITEMS CONTAINED WITHIN THESE MATERIALS. CONEXANT SHALL NOT BE LIABLE FOR ANY SPECIAL, INDIRECT, INCIDENTAL, OR CONSEQUENTIAL DAMAGES, INCLUDING WITHOUT LIMITATION, LOST REVENUES OR LOST PROFITS, WHICH MAY RESULT FROM THE USE OF THESE MATERIALS.

Conexant products are not intended for use in medical, lifesaving or life sustaining applications. Conexant customers using or selling Conexant products for use in such applications do so at their own risk and agree to fully indemnify Conexant for any damages resulting from such improper use or sale.

The following are trademarks of Conexant Systems, Inc.: Conexant™, the Conexant C symbol, and “What’s Next in Communications Technologies”™. Product names or services listed in this publication are for identification purposes only, and may be trademarks of third parties. Third-party brands and names are the property of their respective owners.

For additional disclaimer information, please consult Conexant’s Legal Information posted at www.conexant.com, which is incorporated by reference.

Reader Response: Conexant strives to produce quality documentation and welcomes your feedback. Please send comments and suggestions to tech.pubs@conexant.com. For technical questions, contact your local Conexant sales office or field applications engineer.

Table of Contents

List of Figures vii

List of Tables xi

1.0 Functional Description 1-1

1.1 Pin Descriptions 1-1

1.2 GUI Controller Programmability and Frequency Requirement 1-7

1.3 Device Description 1-10

1.3.1 Overview 1-10
1.3.2 Serial Interface 1-10
1.3.3 Low Voltage Graphics Interface 1-11
1.3.4 Reset 1-11
1.3.5 Device Initialization 1-12
1.3.6 Clocking and Timing Generation 1-13
1.3.6.1 3:2 Clocking Mode 1-14
1.3.7 Master, Pseudo-Master, and Slave Interfaces 1-17
1.3.7.1 Master Interface 1-17
1.3.7.2 Reason for BLANK* 1-18
1.3.7.3 Pseudo-Master Interface 1-18
1.3.7.4 Slave Interface 1-19
1.3.7.5 Slave Interface Without a Crystal 1-20
1.3.8 Autoconfiguration and Interface Bits 1-21
1.3.9 Adaptations for Clock-Limited Master Devices 1-25
1.3.10 Input Formats 1-26
1.3.11 Input Pixel Timing 1-27
1.3.12 YCrCb Inputs (For Standard TV Outputs) 1-27
1.3.13 RGB Inputs (For Standard TV Outputs) 1-29
1.3.14 Input Pixel Horizontal Sync 1-29
1.3.15 Input Pixel Vertical Sync 1-30
1.3.16 Input Pixel Blanking 1-30
1.3.17 Overscan Compensation 1-31
1.3.18 Standard Flicker Filtering 1-35
1.3.19 Adaptive Flicker Filter 1-36
1.3.20 VGA Registers Involved in the TV Out Process 1-39
1.3.21 Output Modes 1-40

1.3.22 Analog Horizontal Sync 1-40
1.3.23 Analog Vertical Sync. 1-41
1.3.24 Analog Video Blanking 1-41
1.3.25 Video Output Standards Supported 1-41
1.3.26 Subcarrier Generation 1-51
1.3.27 Subcarrier Phase Reset/Offset 1-51
1.3.28 Burst Generation 1-52
1.3.29 Video Amplitude Scaling and SINX/X Compensation 1-52
1.3.30 Chrominance Disable 1-52
1.3.31 FIELD Pin Output 1-53
1.3.32 Buffered Crystal Clock Output 1-55
1.3.33 Noninterlaced Output 1-55
1.3.34 Closed Captioning (CC) 1-56
1.3.35 Wide Screen Signaling (WSS). 1-57
1.3.36 Chrominance and Luminance Processing 1-58
1.3.37 Color Bar and Blue Field Generation 1-61
1.3.38 CCIR656 Mode Operation 1-63
1.3.39 CCIR601 Mode Operation for DVD Playback 1-65
1.3.39.1 CCIR601 Data In/NTSC Out 1-65
1.3.39.2 CCIR601 Data In/PAL Out 1-66
1.3.39.3 VGA- Compatible RGB Data In/NTSC Out 1-66
1.3.40 SECAM Output 1-68
1.3.41 Macrovision Copy Protection 1-74
1.3.42 HDTV Output Mode 1-75
1.3.43 SCART Output 1-75
1.3.44 Interlaced Standard Definition Analog Component Video TV Outputs 1-79
1.3.45 VGA(RGB)—DAC Output Operation 1-84
1.3.46 TV Auto-Detection Procedures 1-87
1.3.47 Sleep/Power Management 1-89

2.0 Internal Registers 2-1

2.1 Essential Registers 2-5

2.2 Device Address 2-5

2.3 Writing Registers 2-5

2.4 Reading Registers 2-6

3.0 PC Board Considerations 3-1

3.1 Component Placement 3-1

3.2 Power and Ground Planes 3-2

3.3 Recommended Schematics and Layout for CX25870/871 3-8

3.4 Decoupling 3-9

3.4.1 Device Decoupling 3-9
3.4.2 Power Supply Decoupling. 3-9
3.4.3 COMP Decoupling 3-9

3.4.4 VREF Decoupling . . . 3-9
3.4.5 VBIAS Decoupling . . . 3-9
3.5 Signal Interconnect . . . 3-10
3.5.1 Digital Signal Interconnect . . . 3-10
3.5.2 Analog Signal Interconnect . . . 3-10
3.6 Applications Information . . . 3-11
3.6.1 Changes Required to Accommodate CX25870/871 in Bt868/869-Designs . . . 3-11
3.6.1.1 Software . . . 3-11
3.6.1.2 Hardware . . . 3-12
3.6.2 Programmable Video Adjustment Controls . . . 3-15
3.6.2.1 Contrast . . . 3-15
3.6.2.2 Saturation . . . 3-16
3.6.2.3 Brightness . . . 3-16
3.6.2.4 Hue . . . 3-17
3.6.2.5 Sharpness . . . 3-17
3.6.2.6 Dot Crawl . . . 3-17
3.6.2.7 Standard and Adaptive Flicker Filter . . . 3-18
3.6.2.8 Position . . . 3-20
3.6.2.9 Size . . . 3-21
3.6.3 System Block Diagrams . . . 3-26
3.6.4 Electrostatic Discharge and Latchup Considerations . . . 3-27
3.6.5 Clock and Subcarrier Stability . . . 3-28
3.6.6 Filtering Radio Frequency Modulator Connection . . . 3-29
3.7 CX870EVK Evaluation Kit . . . 3-31
3.8 Serial Interface . . . 3-33
3.8.1 Data Transfer on the Serial Interface Bus . . . 3-33
4.0 Parametric Information . . . 4-1
4.1 DC Electrical Parameters . . . 4-1
4.2 AC Electrical Parameters . . . 4-4
4.3 Mechanical Drawing for 80-Pin PQFP . . . 4-17
Appendix A. Scaling and I/O Timing Register Calculations . . . A-1
Appendix B. Approved Crystal Vendors . . . B-1
Appendix C. Autoconfiguration Mode Register Values and Details . . . C-1
Appendix D. Closed Caption Pseudo Code . . . D-1
Appendix E. CX25870/871 HDTV Output Mode . . . E-1
E.1 Introduction . . . E-1
E.1.1 Allowable Interfaces for HDTV Output Mode . . . E-1
E.1.2 Interface Bit Functionality in HDTV Output Mode . . . E-3

E.1.3 Interface Timing Between the HDTV Source Device (Master) and CX25870/ CX25871 (Timing Slave) E-3
E.1.4 Automatic Trilevel Sync Generation E-5
E.1.5 Allowable Resolutions E-7
E.1.6 720p Support with Character Clock Based Data Masters E-8
E.1.7 Automatic Insertion of Broad Pulses E-9
E.1.8 HDTV Output Mode Register and Bit Definitions E-9
E.1.9 Color Space Conversion Functionality to Support Analog RGB or YPBPR Component Video Outputs E-11
E.1.10 Timing Diagrams for HDTV Output Mode E-11

List of Figures

Figure 1-1. Pinout Diagram for CX25870/871 1-1
Figure 1-2. Flicker Filter Control Diagram 1-8
Figure 1-3. CX25870/871 Encoder Core Block Diagram 1-9
Figure 1-4. Allowable Overscan Compensation Ratios for Dual Display, 800x600 Input/NTSC Output 1-15
Figure 1-5. Operating the CX25870/871 in Master Interface 1-17
Figure 1-6. Operating the CX25870/871 in Pseudo-Master Interface 1-18
Figure 1-7. Operating the CX25870/871 in Slave Interface 1-19
Figure 1-8. Decimation Filter at Fs=27 MHz. 1-28
Figure 1-9. Windows Desktop Image From Encoder Without Overscan Compensation. 1-33
Figure 1-10. Windows Desktop Image From CX25870 With Overscan Compensation 1-34
Figure 1-11. Interlaced 525-Line (NTSC) Video Timing 1-43
Figure 1-12. Interlaced 525-Line (PAL-M) Video Timing 1-44
Figure 1-13. Interlaced 625-Line (PAL-B, D, G, H, I, Nc) Video Timing (Fields 1–4) 1-45
Figure 1-14. Interlaced 625-Line (PAL-B, D, G, H, I, Nc) Video Timing (Fields 5–8) 1-46
Figure 1-15. Interlaced 625-Line (PAL-N) Video Timing (Fields 1–4) 1-47
Figure 1-16. Interlaced 625-Line (PAL-N) Video Timing (Fields 5–8) 1-48
Figure 1-17. Noninterlaced 262-Line (NTSC) Video Timing. 1-49
Figure 1-18. Noninterlaced 262-Line (PAL-M) Video Timing. 1-49
Figure 1-19. Noninterlaced 312-Line (PAL-B, D, G, H, I, N, Nc) Video Timing. 1-49
Figure 1-20. Interlaced 625-Line (SECAM-B, D, G, K, K1, L, M) Video Timing (Fields 1-4). 1-50
Figure 1-21. FIELD Pin Output Timing Diagram (NTSC-M, J, 4.43). 1-53
Figure 1-22. FIELD Pin Output Timing Diagram (PAL-B, D, G, H, I, Nc) 1-54
Figure 1-23. Typical WSS Analog Waveform (NTSC). 1-57
Figure 1-24. Luminance Upsampling Filter 1-59
Figure 1-25. Text Sharpness (Luminance Upsampling) Filter with Peaking Options 1-59
Figure 1-26. Close-Up of Text Sharpness (Luminance Upsampling)Filter with Peaking and Reduction Options 1-59
Figure 1-27. Text Sharpness (Luminance Peaking) Filter Options 1-60
Figure 1-28. Chrominance Filter (CHROMA_BW = 0) - default 1-60
Figure 1-29. Chrominance Wide Bandwidth Filter (CHROMA_BW = 1) 1-60
Figure 1-30. SECAM High Frequency Pre-emphasis Filter. 1-61
Figure 1-31. Composite and S-Video Format (Internal Colorbars). 1-62
Figure 1-32. CX25870/871 Connection to CCIR656-Compatible Master Device 1-63
Figure 1-33. DVD Playback Utilizing Graphics Controller for Color-Space and Progressive Scan Conversion 1-67
Figure 1-34. CX25870 Driving a Type I SCART Connector (EN 50-049 and IEC 933-1 Compliant) 1-78
Figure 1-35. CX25870 Driving a Type II SCART Connector (Y/C and BBC SCART Compliant). 1-79
Figure 1-36. YPR PB Component Video Signals using 100/0/100/0 Color Bars as the Digital Input Signal (Courtesy– EIA-770.2-A standard, page 8 and EIA-770.1 standard) 1-81

Figure 1-37. Filterless DAC Outputs for VGA (RGB)—DAC Output Operation 1-86
Figure 3-1. Power Plane Illustration 3-2
Figure 3-2. Connection Diagram for Output Filters and Other Key Passive Components/Standard Definition TV Out Only 3-3
Figure 3-3. Connection Diagram for Output Filters and Other Key Passive Components/Standard and HDTV Out 3-4
Figure 3-4. CX25870/871 3.3 V Recommended Layout for Connection with 3.3 V Master Device Standard Definition TV Out Only 3-6
Figure 3-5. CX25870/871 3.3 V/1.8 V Recommended Layout for Connection with 1.8 V Master Device Standard Definition TV Out Only 3-7
Figure 3-6. Conexant Recommended GUI for CX25870/871 3-15
Figure 3-7. CX25870/871 Autoconfiguration Modes for 640x480 RGB in, NTSC Out Desktop Resolutions 3-22
Figure 3-8. CX25870/871 Autoconfiguration Modes for 40x480 RGB In, PAL-BDGHI Out Desktop Resolutions 3-22
Figure 3-9. CX25870/871 Autoconfiguration Modes for 800 x 600 RGB In, NTSC Out Desktop Resolutions 3-23
Figure 3-10. CX25870/871 Autoconfiguration Modes for 800 x 600 RGB In, PAL-BDGHI Out Desktop Resolutions 3-23
Figure 3-11. CX25870/871 Autoconfiguration Modes for 1024 x 768 RGB In, NTSC Out Desktop Resolutions 3-24
Figure 3-12. CX25870/871 Autoconfiguration Modes for 1024 x 768 RGB In, PAL-BDGHI Out Desktop Resolutions 3-24
Figure 3-13. Direction-less Size Control Pad 3-25
Figure 3-14. System Block Diagram for Desktop/Portable PC with TV Out 3-26
Figure 3-15. System Block Diagram for Graphics Card with TV Out 3-27
Figure 3-16. SID/SIC Diagram 3-34
Figure 4-1. Timing Details for All Interfaces 4-7
Figure 4-2. Master Interface Timing Relationship/Noninterlaced RGB/YCrCb Input 4-8
Figure 4-3. Pseudo-Master Interface Timing Relationship – Active Line/Noninterlaced RGB Input 4-9
Figure 4-4. Pseudo-Master Timing Relationship Blank Line/Noninterlaced RGB/YCrCb Input. 4-10
Figure 4-5. Slave Interface Timing Relationship/Noninterlaced RGB/YCrCb Input. 4-11
Figure 4-6. Slave Interface Timing Relationship/Interlaced Nonmultiplexed RGB Input (FLD_MODE = 10 – Default) 4-12
Figure 4-7. Slave Interface Timing Relationship/Interlaced Nonmultiplexed YCrCb Input (FLD_MODE = 01) 4-13
Figure 4-8. Slave Interface Timing Relationship/Interlaced Nonmultiplexed YCrCb Input (FLD_MODE = 00) 4-14
Figure 4-9. HDTV Output Horizontal Timing Details: 1080i 4-15
Figure 4-10. HDTV Output Horizontal Timing Details: 720p. 4-16
Figure 4-11. 80-Pin PQFP Package Diagram 4-17
Figure A-1. Allowable Overscan Compensation Ratios for Dual Display, 640x480 Input, NTSC Output with 20 Clock HBlank Period A-4
Figure A-2. Allowable Overscan Compensation Ratios for Dual Display, 640x480 Input, PAL-BDGHI Output with 20 Clock HBlank Period A-5
Figure A-3. Allowable Overscan Compensation Ratios for Dual Display, 800x600 Input, NTSC Output. A-6
Figure A-4. Allowable Overscan Compensation Ratios for Dual Display, 800x600 Input, PAL–BDGHI Output, Standard Clocking Mode A-7

Figure A-5. Allowable Overscan Compensation Ratios for Dual Display, 800x600 Input, NTSC Output in 3:2 Clocking Mode A-8
Figure A-6. Allowable Overscan Compensation Ratios for Dual Display, 800x600 Input, PAL-BDGHI Output in 3:2 Clocking Mode A-9
Figure A-7. Allowable Overscan Compensation Ratios for Dual Display, 1024x768 Input, NTSC Output . . . A-10
Figure A-8. Allowable Overscan Compensation Ratios for Dual Display, 1024x768 Input, PAL-BDGHI Output A-11
Figure E-1. CX25870/871's Pseudo-Master Interface with a Graphics Controller as the Timing Master E-2
Figure E-2. CX25870/871's Slave Interface with a Graphics Controller as the Timing Master E-2
Figure E-3. Typical Trilevel Sync Provided by CX25870/871 . . . . . E-7
Figure E-4. Proper Interface Timing Between the HDTV Source Device (Master) and CX25870/871 (Timing Slave): Active Line in 1080i and 720p ATSC Format (RASTER_SEL[1:0] = 11 or 10), for R, G, B, and Y Analog Outputs E-12
Figure E-5. Proper Interface Timing Between the HDTV Source Device (Master) and CX25870/871 (Timing Slave): Active Line in 1080i and 720p ATSC Format (RASTER_SEL[1:0] = 11 or 10) for P_8 and P_R Analog Outputs E-13
Figure E-6. Proper Interface Timing Between the HDTV Source Device (Master) and CX25870/871 (Timing Slave): Broad Pulse Line in 1080i ATSC Format (RASTER_SEL[1:0] = 11) – Odd Field E-14
Figure E-7. Proper Interface Timing Between the HDTV Source Device (Master) and CX25870/871 (Timing Slave): Two Successive Active Fields in 1080i ATSC Format (RASTER_SEL[1:0] = 11) E-15
Figure E-8. Proper Interface Timing Between the HDTV Source Device (Master) and CX25870/871 (Timing Slave): Broad Pulse Line in 720p ATSC Format (RASTER_SEL[1:0] = 10) E-16

List of Tables

Table 1-1. Pin Assignments 1-2
Table 1-2. Data Pin Assignments for Multiplexed Input Formats 1-5
Table 1-3. Data Pin Assignments for Nonmultiplexed Input Formats 1-6
Table 1-4. Maximum Programmability and Frequency Requirements 1-7
Table 1-5. Autoconfiguration Solutions that Utilize 3:2 Clocking Mode 1-16
Table 1-6. Master Interface without a BLANK* Signal (Default Immediately after any Autoconfiguration Command) 1-21
Table 1-7. Master Interface with a BLANK* Input to the CX25870/871 1-22
Table 1-8. Pseudo-Master Interface without a BLANK* Signal. 1-22
Table 1-9. Pseudo-Master Interface with a BLANK* Input to the CX25870/871. 1-23
Table 1-10. Slave Interface without a BLANK* Signal 1-23
Table 1-11. Slave Interface with a BLANK* Input to the CX25870/871 1-24
Table 1-12. Adjustment to the CX25870/871 MSC Registers. 1-25
Table 1-13. Adjustment to the PLL_INT and PLL_FRACT Registers 1-26
Table 1-14. Summary of Allowable BLANK* Signal Directions by Interface. 1-31
Table 1-15. Optimal Adaptive and Standard Flicker Filter Settings for Common PC Applications. 1-38
Table 1-16. VGA/CRTC Registers Involved in TV Out Process 1-39
Table 1-17. Important Bit Settings for Various Video Outputs 1-42
Table 1-18. Composite and Luminance Amplitude. 1-62
Table 1-19. Composite and Chrominance Magnitude. 1-63
Table 1-20. Register Values for 640x480 / 800x600 / 1024x768 RGB In, SECAM-L Out 1-69
Table 1-21. Vital SECAM Bitsettings–Register 0xA2 1-72
Table 1-22. SECAM Specific Registers. 1-74
Table 1-23. Serial Writes Required to Switch CX25870/871 into SCART Output Operation 1-76
Table 1-24. Default SCART Outgoing Signal Assignments. 1-77
Table 1-25. CX25870 SCART Outputs for Different SCART Standards. 1-78
Table 1-26. Common Registers Required to Switch CX25870/25871 into EIA-770.2-A- or EIA-770.1-Compliant Component Video Outputs 1-82
Table 1-27. Unique Registers Required to Switch CX25870/25871 into EIA-770.2-A- Compliant Component Video Outputs 1-82
Table 1-28. Serial Writes Required to Switch CX25870/871 into VGA/DAC Output Operation 1-84
Table 1-29. Serial Writes Required to Remove Bilevel Syncs from all VGA/DAC Outputs 1-85
Table 1-30. ESTATUS[1:0] Read-back Bit Map. 1-88
Table 2-1. Register Bit Map (* Indicates Read-Only Register) 2-1
Table 2-2. Serial Address Configuration. 2-5
Table 2-3. Bit Map for Read-Only Registers. 2-7
Table 2-4. Data Details Defined for Read-Only Registers 2-8
Table 2-5. Programming Detail 2-9
Table 3-1. Typical Parts List for Key Passive Components. 3-5

Table 3-2. Relative Register Map for CX25870/871 3-11
Table 3-3. Hardware Modifications to Bt868/869-based PCB Required to Accommodate the CX25870/871 3-12
Table 3-4. CX25870 Optimal Adaptive Flicker Filter Bit Settings 3-19
Table 4-1. Recommended Operating Condition 4-1
Table 4-2. Absolute Maximum Rating 4-2
Table 4-3. DC Characteristics for CX25870/871. 4-3
Table 4-4. AC Characteristics for CX25870/871 4-4
Table A-1. Target Video Parameters for Standard Definition TV Output Formats A-2
Table A-2. Key Parameters for Supported Standard Definition Video Output Formats A-3
Table A-3. Constant Values Dependent on Encoding Mode A-3
Table A-4. Overscan Values, 640 x 480 NTSC, Pixel-Based Controller, 1-Pixel Resolution, 2.5 µs HBlank. . A-12
Table A-5. Overscan Values, 640 x 480 NTSC, Character Clock-Based Controller, 8-Pixel Resolution, 2.5 µs HBlank A-14
Table A-6. Overscan Values, 640 x 480 NTSC, Character Clock-Based Controller, 9-Pixel Resolution, 2.5 µs HBlank A-15
Table A-7. Overscan Values, 640 x 480 PAL-BDGHI, Pixel-Based Controller, 1-Pixel Resolution, 2.5 µs HBlank A-16
Table A-8. Overscan Values, 640 x 480 PAL-BDGHI, Character Clock-Based Controller, 8-Pixel Resolution, 2.5 µs HBlank A-19
Table A-9. Overscan Values, 640 x 480 PAL-BDGHI, Character Clock-Based Controller, 9-Pixel Resolution, 2.5 µs HBlank A-20
Table A-10. Overscan Values, 800 x 600 NTSC, Pixel-Based Controller, 1-Pixel Resolution. A-21
Table A-11. Overscan Values, 800 x 600 NTSC, Character Clock-Based Controller, 8-Pixel Resolution, 0–1.5 µs HBlank A-25
Table A-12. Overscan Values, 800 x 600 NTSC, Character Clock-Based Controller, 9-Pixel Resolution, 0–3.0 µs HBlank A-26
Table A-13. Overscan Values 800 x 600 NTSC, Pixel-Based Controller, 1-Pixel Resolution, 3:2 Clocking Mode A-27
Table A-14. Overscan Values 800 x 600 NTSC, Character Clocked-Based Controller, 8-Pixel Resolution, 3:2 Clocking Mode A-31
Table A-15. Overscan Values 800 x 600 NTSC, Character Clocked-Based Controller, 9-Pixel Resolution, 3:2 Clocking Mode A-32
Table A-16. Overscan Values, 800 x 600 PAL-BDGHI, Pixel-Based Controller, 1-Pixel Resolution, >2.5 µs HBlank A-34
Table A-17. Overscan Values, 800 x 600 PAL-BDGHI, Character Clock-Based Controller, 8-Pixel Resolution A-36
Table A-18. Overscan Values, 800 x 600 PAL-BDGHI, Character Clock-Based Controller, 9-Pixel Resolution A-37
Table A-19. Overscan Values 800 x 600 PAL-BDGHI, Pixel-Based Controller, 1-Pixel Resolution, 3:2 Clocking Mode A-38
Table A-20. Overscan Values 800 x 600 PAL-BDGHI, Character Clock-Based Controller, 8-Pixel Resolution, 3:2 Clocking Mode A-41
Table A-21. Overscan Values 800 x 600 PAL-BDGHI, Character Clock-Based Controller, 9-Pixel Resolution, 3:2 Clocking Mode A-41
Table A-22. Overscan Values 1024 x 768 NTSC, Pixel-Based Controller, 1-Pixel Resolution, >1.50 ms. Hblank A-42
Table A-23. Overscan Values 1024 x 768 NTSC, Character Clock-Based Controller, 8Pixel Resolution, >1.50

µs HBlank A-46
Table A-24. Overscan Values 1024 x 768 NTSC, Character Clock-Based Controller, 9-Pixel Resolution A-47
Table A-25. Overscan Values 1024 x 768 PAL-BDGHI, Pixel-Based Controller, 1-Pixel Resolution, >3 ms. Hblank A-49
Table A-26. 1024 x 768 PAL-BDGHI, Character Clock-Based Controller, 8-Pixel Resolution , >4 ms. Hblank A-52
Table A-27. Overscan Values 1024 x 768 PAL-BDGHI, Character Clock-Based Controller, 9-Pixel Resolution A-52
Table C-1. CX25870/871 Register Values for Autoconfiguration Modes 0–4 . . . . . C-1
Table C-2. CX25870/871 Register Values for Autoconfiguration Modes 5–10 . . . . . C-4
Table C-3. CX25870/871 Register Values for Autoconfiguration Modes 11–15 . . . . . C-6
Table C-4. CX25870/871 Register Values for Autoconfiguration Modes 16–21 . . . . . C-8
Table C-5. CX25870/871 Register Values for Autoconfiguration Modes 22–26 . . . . . C-10
Table C-6. CX25870/871 Register Values for Autoconfiguration Modes 27–30 . . . . . C-12
Table C-7. CX25870/871 Register Values for Autoconfiguration Modes 31–36 . . . . . C-14
Table C-8. CX25870/871 Register Values for Autoconfiguration Modes 37–42 . . . . . C-16
Table C-9. CX25870/871 Register Values for Autoconfiguration Modes 43–47 . . . . . C-18
Table E-1. CX25870 Register Settings for 24-Bit RGB Multiplexed In, Y/P_R/P_B HDTV Out. E-4
Table E-2. Default State of CX25870/871 Immediately After Switch into HDTV Output Mode E-5
Table E-3. CX25870/871 RASTER_SEL[1:0] bit functionality. E-6
Table E-4. CX25870/871 HDTV Supported Formats. E-7
Table E-5. Register Bit Map for HDTV-specific registers E-9
Table E-6. CX25870/871 Registers 0x2E & 0x32 – HDTV Output Mode Bit Descriptions E-10

1.0 Functional Description

1.1 Pin Descriptions

The pinout diagram is illustrated in Figure 1-1. Pin names, input/output assignments, numbers, and descriptions are listed in Tables 1-1, 1-2, and 1-3.

Figure 1-1. Pinout Diagram for CX25870/871

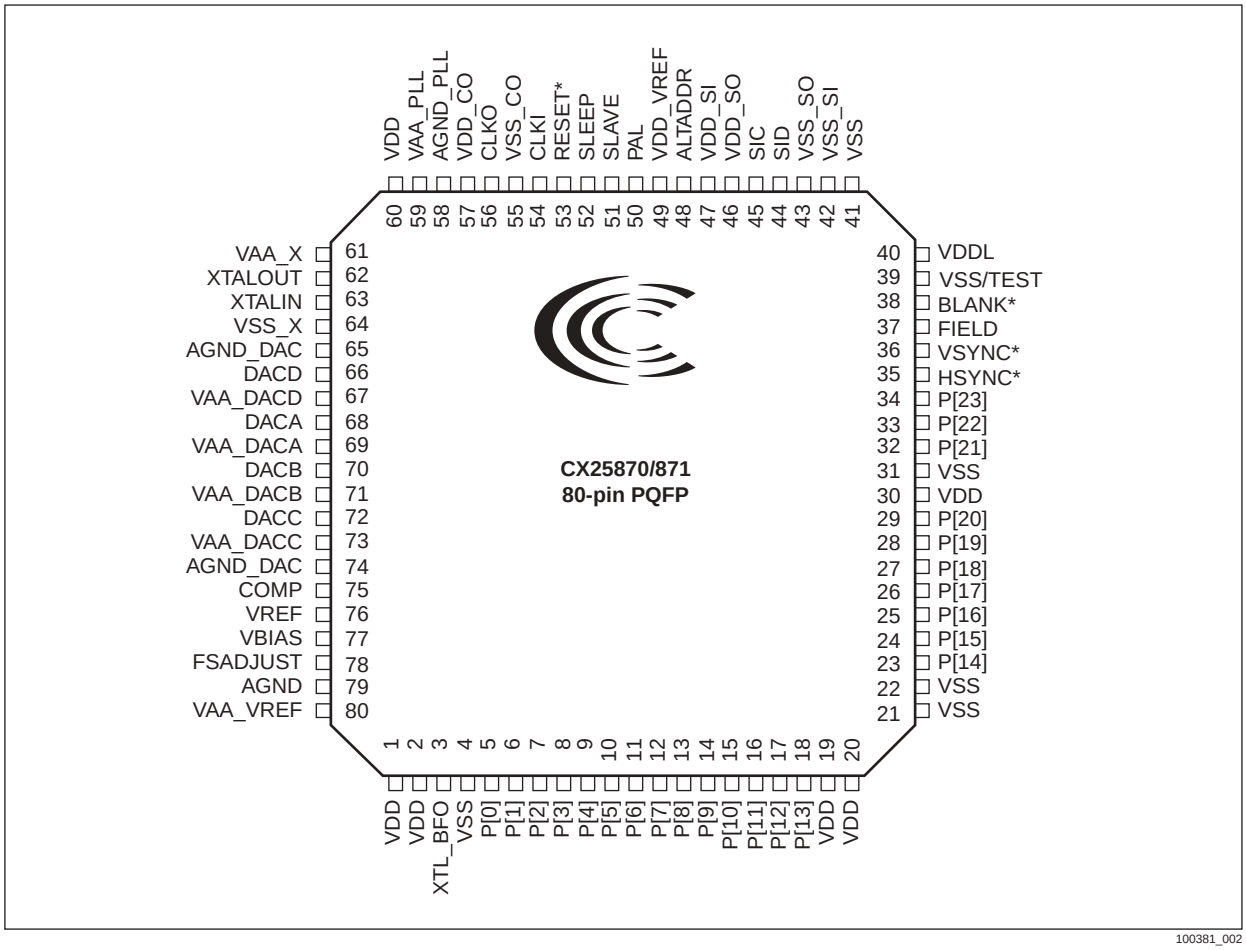

Aside from pins 2, 3, 65, 66, and 67, which are no connects within the Bt868/869, the CX25870/871 is completely pin-to-pin compatible with Conexant's first generation VGA encoder.

Table 1-1. Pin Assignments (1 of 3)

Pin Name	I/O	Pin #	Description
VAA_VREF	—	80	Analog power. All VAA and VDD pins must be connected together on the same PCB plane to prevent latchup.
AGND	—	79	Analog ground. All AGND and VSS pins must be connected together on the same PCB plane to prevent latchup.
FSADJUST	I	78	Full-scale adjust control pin. A resistor (RSET) connected between this pin and GND controls the full-scale output current on the analog outputs.
VBIAS	O	77	DAC bias voltage. A 0.1 μF ceramic capacitor must be used to bypass this pin to GND. The capacitor must be as close to the device as possible to keep lead lengths to an absolute minimum.
VREF	O	76	Voltage reference pin. A 1.0 μF ceramic capacitor must be used to decouple this pin to GND. The decoupling capacitor must be as close to the device as possible to keep lead lengths to an absolute minimum.
COMP	O	75	Compensation pin. A 0.1 μF ceramic capacitor must be used to bypass this pin to VAA. The capacitor must be as close to the device as possible to keep lead lengths to an absolute minimum.
VAA_DACC	—	73	DACC Analog power. All VAA and VDD pins must be connected together on the same PCB plane to prevent latchup.
DACC	O	72	DACC Analog output.
VAA_DACB	—	71	DACB Analog power. All VAA and VDD pins must be connected together on the same PCB plane to prevent latchup.
DACB	O	70	DACB Analog output.
VAA_DACA	—	69	DACA Analog power. All VAA and VDD pins must be connected together on the same PCB plane to prevent latchup.
DACA	O	68	DACA Analog output.
VAA_DACD	—	67	DACD analog power. All VAA and VDD pins must be connected together on the same PCB plane to prevent latchup.
DACD	O	66	DACD analog output. If unused, DACD should be left as a no connect.
AGND_DAC	—	65, 74	Common DAC Analog ground return. All AGND and VSS pins must be connected together on the same PCB plane to prevent latchup.
VSS_X	—	64	Crystal oscillator ground pin. This pin should be tied to the ground plane.
XTALIN	I	63	A crystal can be connected to these pins. The pixel clock output (CLKO) is derived from these pins with a PLL. XTALIN can be driven as a CMOS input pin. Internally, this is a CMOS inverter tying XTALOUT to XTALIN. If XTALOUT is unused, it should be left as a no connect.
XTALOUT	O	62	
VDD_X	—	61	Crystal oscillator supply pin. This pin should be tied to the power supply.
VAA_PLL	—	59	Analog power for PLL. All VAA and VDD pins must be connected together on the same PCB plane to prevent latchup.
AGND_PLL	—	58	Analog ground for PLL. All AGND and VSS pins must be connected together on the same PCB plane to prevent latchup.

Table 1-1. Pin Assignments (2 of 3)

Pin Name	I/O	Pin #	Description
VDD_CO	—	57	Clock output supply pin. This pin should be tied to the power supply. For low voltage infacing this pin should be tied to the low voltage supply.
CLKO	O	56	Pixel clock output (TTL compatible). This pin is three-state if the CLKI pin provides the encoder clock.
VSS_CO	—	55	Clock output ground pin. This pin should be tied to the ground plane.
CLKI	I	54	Pixel clock input (TTL compatible). This may be used as either the encoder clock or a delayed version of the CLKO pin synchronized with the pixel data input.
RESET*	I	53	Reset control input (TTL compatible). A logical 0 applied for a minimum of 20 CLKI clock cycles resets and disables video timing (horizontal, vertical, subcarrier counters) to the start of VSYNC of the first field and resets the serial interface registers. RESET* must be a logical 1(3.3 V) for normal operation.
SLEEP	I	52	Power-down control input (TTL compatible). A logical 1 configures the device for power-down mode. A logical 0 configures the device for normal operation.
SLAVE	I	51	Slave/master mode select input (TTL compatible). A logical 1 configures the device for slave video timing operation. A logical 0 configures the device for master video timing operation.
PAL	I	50	PAL/NTSC mode select input (TTL compatible). A logical 1 configures the device for PAL video format and Autoconfiguration Mode 1. A logical 0 configures the device for NTSC video format and Autoconfiguration Mode 0.
VDD_VREF	I	49	Input threshold adjustment. This pin should be tied to VDD for 3.3 V input swings or VDDL/2 for low voltage input swings.
ALTADDR	I	48	Alternate slave address input (TTL compatible). A logical 0 configures the device to respond to a serial write address of 0x88. A logical 1 configures the device to respond to a serial write address of 0x8A. In addition, serial reads to address 0x89 (ALTADDR = 0) or 0x8B (ALTADDR = 1) are possible with this pin.
VDD_SI	—	47	Serial interface input supply pin. This pin should be tied to VDD (3.3 V).
VDD_SO	—	46	Serial interface output supply pin. This pin should be tied to VDD (3.3 V).
SIC	I	45	Serial interface clock input (TTL compatible).
SID	I/O	44	Serial interface data input/output (TTL compatible). Data is written to and read from the device via this serial bus.
VSS_SO	—	43	Serial interface input ground pin. This pin should be tied to the ground plane.
VSS_SI	—	42	Serial interface input ground pin. This pin should be tied to the ground plane.
VDDL	—	40	Digital power for low voltage interface. All VAA and VDD pins must be connected together on the same PCB plane to prevent latchup. For a low voltage interface, this pin should be tied to the low voltage supply.
VSS/TEST	I	39	Test pin. Should be tied to VSS for normal operation.
BLANK*	I/O	38	Composite blanking control (TTL compatible). This can be generated by the encoder or supplied from the graphics controller. If internal blanking is used, this pin can be used to indicate the control character clock edge. If unused, BLANK* should be tied high through a 10 k Ω pullup resistor.

Table 1-1. Pin Assignments (3 of 3)

Pin Name	I/O	Pin #	Description
FIELD	O	37	Field control output (TTL compatible). FIELD transitions after the rising edge of CLK, two clock cycles following falling HSYNC*. It is a logical 0 during odd fields and is a logical 1 during even fields. If unused, FIELD should be left as a no connect.
VSYNC*	I/O	36	Vertical sync input/output (TTL compatible). As an output (timing master operation), VSYNC* is output following the rising edge of CLK. As an input (timing slave operation), VSYNC* is clocked on the rising edge of CLK.
HSYNC*	I/O	35	Horizontal sync input/output (TTL compatible). As an output (timing master operation), HSYNC* is output following the rising edge of CLK. As an input (timing slave operation), HSYNC* is clocked on the rising edge of CLK.
P[23:21]	I	34-32	Pixel inputs. See Table 1-2. The input data is sampled on both the rising and falling edge of CLK for multiplexed modes, and on the rising edge of CLK in nonmultiplexed modes. A higher bit index corresponds to a greater bit significance.
P[20:14]	I	29-23	
P[13:0]	I	18-5	
VSS	—	4, 21, 22, 31, 41	Digital ground for core logic. All AGND and VSS pins must be connected together on the same PCB plane to prevent latchup.
XTL_BFO	O	3	Buffered crystal clock output. On power-up, the encoder will transmit a 0 to 3.3 V signal at a frequency equal to the frequency of the crystal found between the XTALIN/XTALOUT ports. Normally the XTL_BFO output is at a rate of 13.500 MHz. If unused, XTL_BFO should be left as a no connect.
VDD	—	1, 2, 19, 20, 30, 60	Digital power for core logic. All VAA and VDD pins must be connected together on the same PCB plane to prevent latchup.

Table 1-2. Data Pin Assignments for Multiplexed Input Formats

Falling Edge of CLKI							
IN_MODE[3:0]	**0000**	**0010/0001**	**0101**	**0100**	**1000**	**0110**	**1100**
Pin	**24-bit RGB Mode**	**15/16-bit RGB Mode**	**16-bit YCrCb Mode**	**24-bit YCrCb Mode**	**Alternate 24-bit RGB Mode**	**Alternate 16-bit YCrCb Mode**	**Alternate 24-bit YCrCb Mode**
P[11]	R7	R4	Y7	Y7	R7	—	Cr7
P[10]	R6	R3	Y6	Y6	R6	—	Cr6
P[9]	R5	R2	Y5	Y5	R5	—	Cr5
P[8]	R4	R1	Y4	Y4	R4	—	Cr4
P[7]	R3	R0	Y3	Y3	R3	Y7	Cr3
P[6]	G7	G5[(1)]	Y2	Y2	R2	Y6	Cr2
P[5]	G6	G4	Y1	Y1	R1	Y5	Cr1
P[4]	G5	G3	Y0	Y0	R0	Y4	Cr0
P[3]	R2	—	—	Cb3	G7	Y3	Y7
P[2]	R1	—	—	Cb2	G6	Y2	Y6
P[1]	R0	—	—	Cb1	G5	Y1	Y5
P[0]	G1	—	—	Cb0	G4	Y0	Y4
Rising Edge of CLKI							
P[11]	G4	G2	Cr/Cb7	Cr7	G3	—	Y3
P[10]	G3	G1	Cr/Cb6	Cr6	G2	—	Y2
P[9]	G2	G0	Cr/Cb5	Cr5	G1	—	Y1
P[8]	B7	B4	Cr/Cb4	Cr4	G0	—	Y0
P[7]	B6	B3	Cr/Cb3	Cr3	B7	Cr/Cb7	Cb7
P[6]	B5	B2	Cr/Cb2	Cr2	B6	Cr/Cb6	Cb6
P[5]	B4	B1	Cr/Cb1	Cr1	B5	Cr/Cb5	Cb5
P[4]	B3	B0	Cr/Cb0	Cr0	B4	Cr/Cb4	Cb4
P[3]	G0	—	—	Cb7	B3	Cr/Cb3	Cb3
P[2]	B2	—	—	Cb6	B2	Cr/Cb2	Cb2
P[1]	B1	—	—	Cb5	B1	Cr/Cb1	Cb1
P[0]	B0	—	—	Cb4	B0	Cr/Cb0	Cb0

NOTE(S):
(1) G5 is ignored in 15-bit RGB Multiplexed Input Mode.

Table 1-3. Data Pin Assignments for Nonmultiplexed Input Formats

IN_MODE[3:0]	1010	1110	0011	0111	1011	1111
Pin	16-bit nonmux RGB	16-bit nonmux YCrCb	24-bit nonmux RGB	24-bit nonmux YCrCb	Alternate 16-bit nonmux RGB	Alternate 24-bit nonmux YCrCb
P[23]	—	—	B7	Cb7	R7	Cr7
P[22]	—	—	B6	Cb6	R6	Cr6
P[21]	—	—	B5	Cb5	R5	Cr5
P[20]	—	—	B4	Cb4	R4	Cr4
P[19]	R4	Y7	B3	Cb2	R3	Cr3
P[18]	R3	Y6	B2	Cb2	R2	Cr2
P[17]	R2	Y5	B1	Cb1	R1	Cr1
P[16]	R1	Y4	B0	Cb0	R0	Cr0
P[15]	R0	Y3	G7	Cr7	G7	Y7
P[14]	G5	Y2	G6	Cr6	G6	Y6
P[13]	G4	Y1	G5	Cr5	G5	Y5
P[12]	G3	Y0	G4	Cr4	G4	Y4
P[11]	G2	Cr/Cb7	G3	Cr3	G3	Y3
P[10]	G1	Cr/Cb6	G2	Cr2	G2	Y2
P[9]	G0	Cr/Cb5	G1	Cr1	G1	Y1
P[8]	B4	Cr/Cb4	G0	Cr0	G0	Y0
P[7]	B3	Cr/Cb3	R7	Y7	B7	Cb7
P[6]	B2	Cr/Cb2	R6	Y6	B6	Cb6
P[5]	B1	Cr/Cb1	R5	Y5	B5	Cb5
P[4]	B0	Cr/Cb0	R4	Y4	B4	Cb4
P[3]	—	—	R3	Y3	B3	Cb3
P[2]	—	—	R2	Y2	B2	Cb2
P[1]	—	—	R1	Y1	B1	Cb1
P[0]	—	—	R0	Y0	B0	Cb0

1.2 GUI Controller Programmability and Frequency Requirement

Programmability and frequency requirements for the Graphics Controller/Data Master device are defined in Table 1-4 for the most common input resolutions.

Table 1-4. Maximum Programmability and Frequency Requirements

Desktop Input Mode	Maximum Total		Maximum End of Active to Vsync	Maximum Frequencies	
	Pixels/HTOTAL	Lines/VTOTAL	Lines	Line (kHz)	Pixel (MHz)
640 x 480	1075	665	76	39.860	31.563
800 x 600	1075	835	91	49.450	39.997
800 x 600 (3:2 CLK mode)	1625	834	92	49.630	59.063
1024 x 768 (3:2 CLK mode)	1625	1068	122	63.776	75.750

Table 1-4 contains maximum values for the dual display solutions that provide 8 percent to 32 percent horizontal and vertical overscan compensation. For larger overscan compensation percentages, the values would be larger. The maximum pixel frequency supported is 53.333 MHz for standard clocking mode and 80.000 MHz for 3:2 clocking mode.

Figure 1-2. Flicker Filter Control Diagram

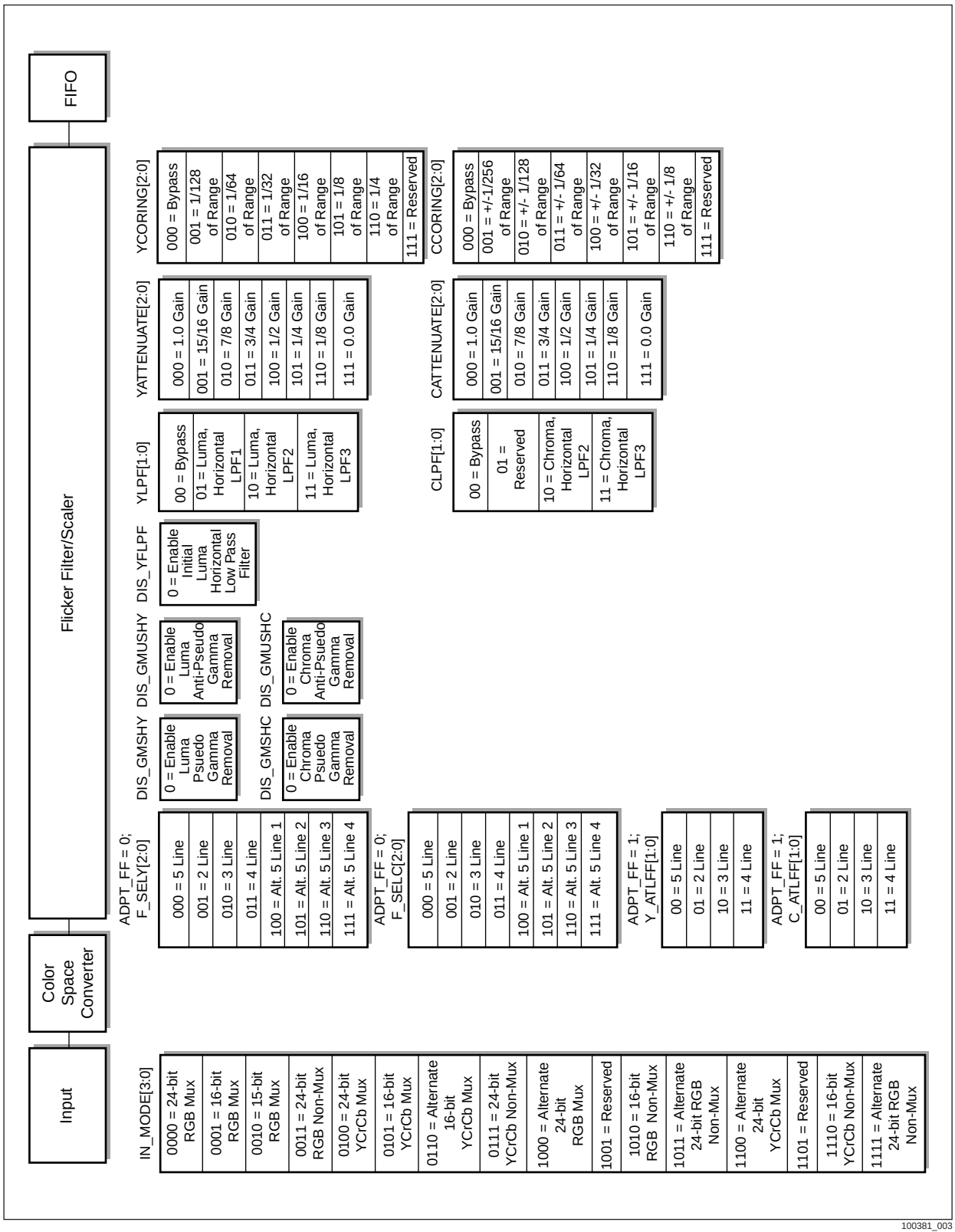

Figure 1-3. CX25870/871 Encoder Core Block Diagram

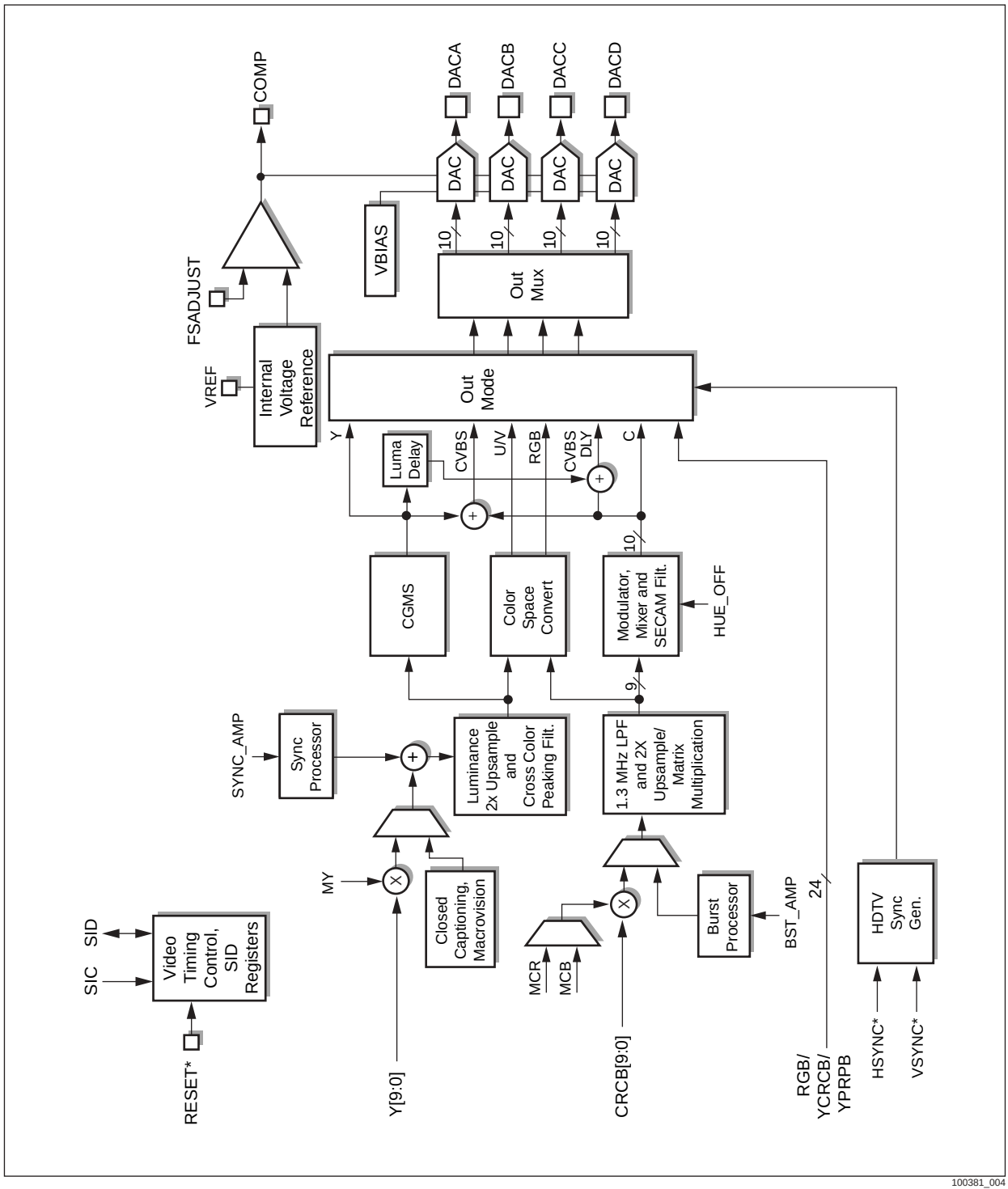

1.3 Device Description

1.3.1 Overview

The CX25870/871 is a video encoder designed for TV output of interlaced and noninterlaced graphics data. Common applications requiring flicker-filtered TV output include:

- desktop/portable PCs with TV Out
- high definition TVs
- DVD players and set top boxes
- graphic cards with TV Out
- game consoles
- set-top boxes

It incorporates normal and adaptive filtering technology for flicker removal and flexible amounts of overscan compensation for high-quality display of noninterlaced images on an interlaced TV. The CX25870/871 accomplishes this by minimizing the flicker and controlling the amount of overscan so that the entire image is viewable.

The CX25870/871 consists of a Color Space Converter/Flicker Filter engine followed by a digital video encoder. The Color Space Converter/Flicker Filter contains:

- A timing converter
- Various horizontal video processing functions
- Flicker filter and vertical scaler for overscan compensation

The output of this engine feeds into a FIFO for synchronization with the digital video encoder.

The CX25870/871 provides Composite, S-Video, or 3-signal analog RGB or YP_BP_R HDTV output. While the encoder is in HDTV output mode, the device will automatically insert trilevel synchronization pulses (when necessary) and vertical synchronizing “broad pulses.” The CX25870/871 is compliant with EIA770-3, SMPTE 274M/293M/296M and supports ATSC HDTV resolutions including 480p, 720p, and 1080i.

1.3.2 Serial Interface

The device includes a 2-wire read and write serial interface for programming the registers in the device. The interface is designed to operate with 3.3 V levels. To ensure that valid serial data is received and transmitted, make sure the VDD_SI pin is connected to a stable 3.3 V supply. Review Chapter 2.2, Chapter 2.3 and Chapter 2.4 for more details of the encoder’s serial interface.

1.3.3 Low Voltage Graphics Interface

The CX25870/871 can receive or transmit signals from/to a graphics controller at any of five different voltage levels. The allowable voltage levels are 3.3 V, 1.8 V, 1.5 V, 1.3 V, and 1.1 V. Default input/output voltage amplitude for the interface signals (defined as P[23:0], HSYNC*, VSYNC*, CLKI, CLKO, BLANK*, and FIELD) is 3.3 V and matches the Bt868/869 to ensure backwards compatibility.

For a 3.3 V digital interface, no special configuration steps are necessary. Simply follow "Recommended Layout for Connection with a 3.3 V Master Device" in Chapter 3.3 and on power-up, the encoder will automatically expect 3.3 V signal transitions.

For a 1.8 V or lower digital interface, several special configuration steps are necessary. First, the layout must adhere to Chapter 3.3's "3.3 V/1.8 V. Recommended Layout for Connection with a 1.8 V Master Device." Second, program the DRVS[1:0] field (bits[6:5] of register (0x32)) to 01(or an alternate value for 1.5 V, 1.3 V or 1.1 V interface). This forces the encoder to increase its drive strength on each interface signal used as an output in the interface. Third, connect the VDDL (pin 40) and VDD_CO (pin 57) power supply pins to the correct lower supply voltage (1.8 V or other). Fourth, using a voltage divider circuit or some other method, tie the CX25870/871's VDD_VREF input (pin 49) to a level equal to (VDDL/ 2). Make sure this voltage source is stable since the VDDL pin controls the output signal levels. The VDD_VREF pin dictates the encoder threshold voltage received for the appropriate input signals. The third and fourth steps are illustrated in Figure 3-5. Make sure the graphics controller is configured to send and accept signals at the lower supply voltage.

Adjusting VDD_CO, VDDL and VDD_VREF appropriately controls the input voltage levels for the digital input pins P[23:0], CLKI, and HSYNC*/VSYNC*/BLANK* (in slave interface; EN_BLANKO = 0). Using the DRVS[1:0] bits control the output voltage levels for the digital output pins CLKO, FIELD, and HSYNC*/VSYNC*/BLANK* (in master or pseudo-master interface; EN_BLANKO = 1). In this way, the digital input pins can operate at different input voltage levels than the digital output voltage levels.

Table 1-5. Digital Pins that Comprise the Low Voltage Graphics Interface

Pin #	Pin Name	Direction of Pin
5	Pixel[0]	Input
6	Pixel[1]	Input
7	Pixel[2]	Input
8	Pixel[3]	Input
9	Pixel[4]	Input
10	Pixel[5]	Input
11	Pixel[6]	Input
12	Pixel[7]	Input
13	Pixel[8]	Input
14	Pixel[9]	Input
15	Pixel[10]	Input
16	Pixel[11]	Input
17	Pixel[12]	Input
18	Pixel[13]	Input
23	Pixel[14]	Input
24	Pixel[15]	Input
25	Pixel[16]	Input
26	Pixel[17]	Input
27	Pixel[18]	Input
28	Pixel[19]	Input
29	Pixel[20]	Input
32	Pixel[21]	Input
33	Pixel[22]	Input
34	Pixel[23]	Input
35	HSYNC*	Input or Output
36	VSYNC*	Input or Output
37	FIELD	Output
38	BLANK*	Input or Output
54	CLKI	Input
56	CLKO	Output

1.3.4 Reset

If the RESET* pin is held low (between 0.8 V and GND –0.5 V) for a minimum of 20 clock cycles, a timing reset and a software reset is performed and the serial interface is held in the reset condition. A timing reset, which can be generated by setting the TIMING_RST register bit, will set the subcarrier phase to zero, and configure the horizontal and vertical counters to the beginning of VSYNC* of Field 1 (both counters equal to zero).

If the CX25870/871 is in the master interface (i.e., CX25870 sends the syncs to the data master) then after a power-on or pin reset the encoder and the flicker filter starts a line 1, pixel 1 of their respective timing generation. For the encoder this means the odd field is always the first field after a power-on reset, pin reset, or timing reset.

In timing the slave interface (CX25870 is either pseudo-master or pure slave), even though the input is receiving progressive frames that have no field associated with it, the input timing generator keeps track of the frames received. As a result, after every second frame received, a frame sync is sent to the encoder section so that the input and encoder remain synchronized. The frame sync forces the encoder to the beginning of the odd field.

Conexant recommends that after every overscan compensation or video output type change, the TIMING_RST bit be enabled. The setting of the TIMING_RST bit should occur after waiting a minimum of 1 ms between the last CX25870 register write for the new overscan compensation ratio. The TIMING_RST register bit clears itself and reinitializes the internal timing generators.

A software reset, which can be generated by setting the SRESET register bit, initializes all the serial interface registers to their default state. As a result, all digital output control pins are three-stated. Registers 0x38 and 0x76 to 0xB4 inclusive are then initialized to auto-configuration mode 0 (see the Auto Configuration section values) or mode 1 depending on the state of the PAL pin. The EN_OUT bit must be set to enable the digital outputs.

A power-on reset, pin reset, or timing reset (register 0x6C, bit 7) causes the input timing generator to send the encoder a frame synchronization pulse setting the encoder to the beginning of the odd field. The first HSYNC*/VSYNC* combination then corresponds to the encoder even field and then the second HSYNC*/VSYNC* combination again causes a frame synchronization pulse and the encoder will start the odd field, and so on and so forth.

A power-on reset is generated on power-up. The power-on reset generates the same type of reset as the RESET* pin. A time delay circuit triggered after the supply voltage reaches a value sufficiently high enough for the circuit to operate and then generate the power-on reset. As such, the device may not initialize to the default state unless the power supply ramp rate is sufficiently fast enough. A hardware/pin reset is recommended if the default state is required.

1.3.5 Device Initialization

After a reset condition, the device must be programmed through the serial interface to activate a video output and enable the CLKO, HSYNC*, VSYNC*, and FIELD outputs. The easiest method for accomplishing the initialization phase is to use one of the auto configuration modes in Appendix C, and program the interface bits appropriately. (Refer to Section 1.3.8.)

1.3.6 Clocking and Timing Generation

Two timing generators control the operation of the encoder. The output encoder timing block generates the signals for the proper encoding of the video into NTSC, PAL, or SECAM and extracts the processed input pixels from the internal FIFO. The encoding timing generator can receive its clock from either an external crystal oscillator and internal PLL (master and pseudo-master interface), or from the CLKI pin (slave interface). Conexant recommends that the encoding clock be generated by the PLL. Register bit EX_XCLK selects the clock source. If EN_XCLK is set to a logical 0, the internal clock source is selected via the crystal attached to XTALIN/XTALOUT. When the EN_XCLK bit is set, the clock source received at the CLKI pin is utilized as the main pixel/encoder clock. Conexant recommends that the encoding clock be generated by the PLL.

A crystal must be present between XTALIN and XTALOUT pins if the internal clock source is selected. In this case, the CX25870/871's CLK frequency is synthesized by its PLL such that the pixel clock frequency equals

For PLL DIV10=0: $F_{clk} = F_{xtal} * \{PLL_INT(5:0) + [PLL_FRACT(15:0)/2^{16}]\}/6$
For PLL DIV10=1: $F_{clk} = F_{xtal} * \{PLL\ INT(5:0) + [PLL\ FRACT(15:0)/2^{16}]\}/10$
where:
F_{clk} = *CLKO Output Frequency = CLKI Input Frequency*

NOTE: In some special modes, CLKO = F_{clk} / 2.

The crystal must be chosen so that the precise line rate for the video standards required can be achieved. This is done to maintain the subcarrier relationship to the line rate and thereby achieve the precise subcarrier frequency required. The crystal oscillator is designed to oscillate from 5 MHz through 25 MHz. A 13.5000 MHz crystal meets the requirements for NTSC, PAL, and SECAM video standards. The crystal must be within 50 ppm of the maximum desired clock rate for NTSC operation, and 25 ppm for PAL or SECAM operation, across the temperature range (0° to 70° C). If the CX25870/871 is to provide all video outputs selectable through software, the customer must use a crystal with a maximum tolerance across the temperature range of 25 ppm. Appendix B contains a list of previously tested and recommended crystal vendors.

The crystal oscillator is disabled by the XTAL _PAD_DIS register bit. Sufficient time (20 µs) must be allowed after coming out of sleep mode to allow the oscillator to stabilize. The PLL_LOCK bit is set when the PLL is stable. In addition, if the PLL_INPUT register bit is set to a logical 1, CLKI is selected as the reference for PLL. In this special mode (slave interface with the PLL_32CLK high), the above F_{clk} formulas replace F_{xtal} with FCLKI/2 (i.e., input clock frequency is divided by 2).

If the external clock source is selected (EN_XCLK=1), a clock signal of the desired pixel clock rate must be present at the CLKI pin. The CLKO pin is three-stated, and the crystal oscillator disabled. The clock must meet the same requirements as above. It is highly recommended that the internal clock be used in order to ensure the output video remains within the specifications defined by the relevant video standard. Any aberration in the source clock is reflected in the color subcarrier frequency of the output video and detracts from the quality of the image on the television.

The BY_PLL bit bypasses the PLL, and the encoder clock will be at the crystal frequency. This bit takes precedence over the EN_XCLK bit.

The second timing generator controls the generation of the HSYNC*, VSYNC*, and BLANK* signals, and pixel input clocking. This is normally the same clock as the encoding clock. The EN_ASYNC register bit, if set, allows this clock to be driven directly by the CLKI pin. If the DIV2 register bit is set, this internal clock is divided by two before driving the second timing generator. This is required for interlaced input to interlaced output mode (i.e., CCIR601/DVD and CCIR656 applications).

The CLKI pin is the clock used for synchronizing pixel inputs (P[23:0]) with the timing input signals (HSYNC*, VSYNC*, and BLANK*) and normally is a delayed version of the CLKO pin. It can be directly connected to CLKO if desired. Data is registered with this input and re-synchronized to the internal clock. In a multiplexed input mode, both edges of the CLKI input are used. If the MODE2X register bit is set, the internal clock is divided by two, allowing a 2x external clock, and data to be provided on the rising edge only.

1.3.6.1 3:2 Clocking Mode

All graphics controllers require some finite time for resetting their internal counters to zero, clearing register flags, and any other event that needs to be performed on a line-by-line basis. The sum of time these incidents take are the graphics controller's Horizontal Blanking Time. The amount of Horizontal Blanking time varies from one master device to another but it can never be less than 0 µs and usually does not exceed 4 µs per digital line.

Figure 1-4 illustrates higher resolutions (i.e., 800x600 or greater), for some data master devices that require more Horizontal Blanking Time than the CX25870/871 provides in standard clocking mode, for dual display of certain overscan compensation percentage pairs. For example, a graphics controller may require a minimum total of 1.25 µs of Horizontal Blanking time per line while clocking a frame with an active resolution of 800x600 to the encoder. If this were the case, the entire set of overscan compensation solutions charted at the 1 µs diagonal plot line (denoted with a dot-dash-dot) and below are made unavailable to the designer. The result is a more limited set of overscan pairs to choose from, and correspondingly less size control for the picture when displayed on a television.

Figure 1-4. Allowable Overscan Compensation Ratios for Dual Display, 800x600 Input/NTSC Output

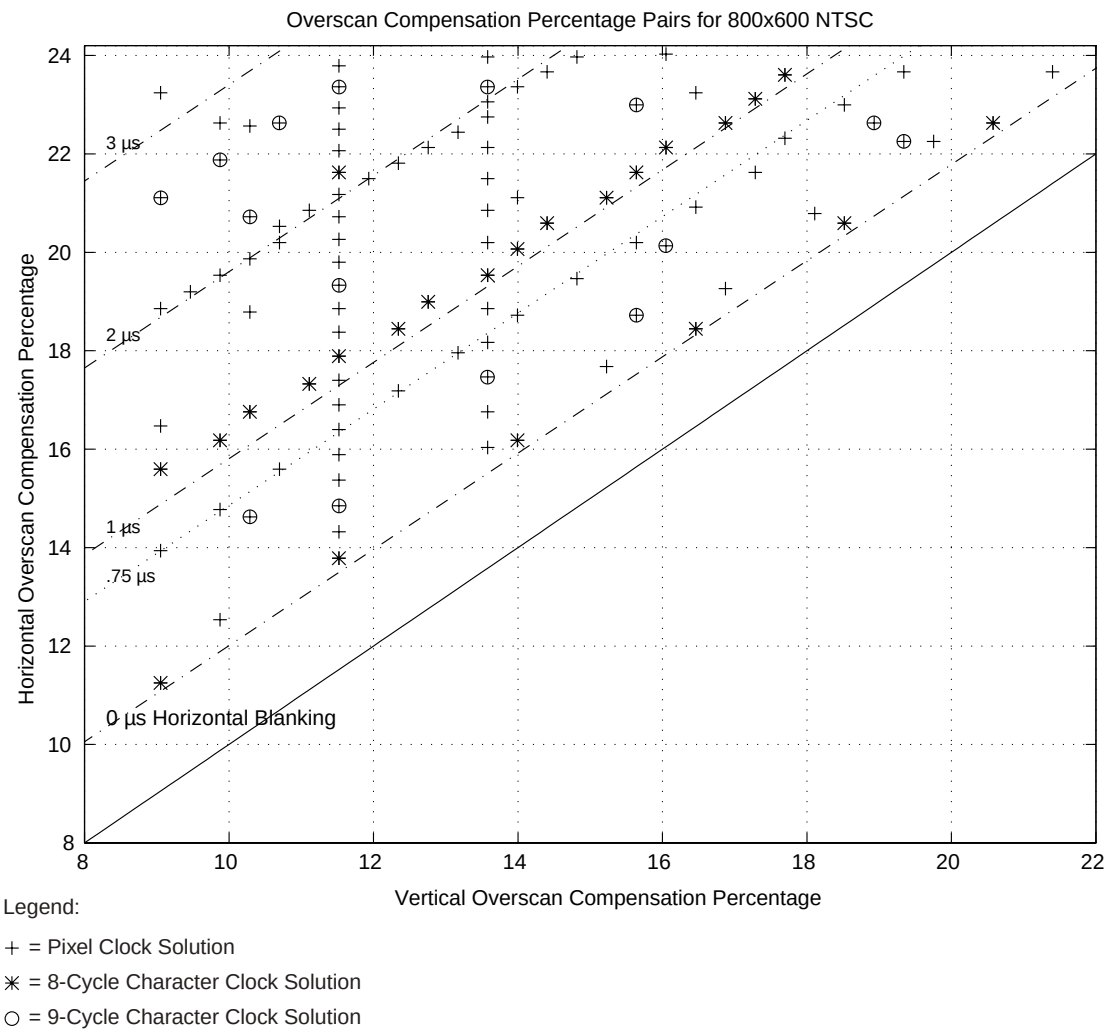

NOTE(S):

Use this chart for PAL-M and PAL-60 allowable overscan ratios.

Since the CX25870/871 contains this new 3:2 Clocking Mode, the designer does not face this constraint any longer. By choosing an appropriate autoconfiguration mode, setting the PLL_32CLK bit to 1, and altering the values for various timing registers within the controller and encoder (e.g., H_CLKI = HTOTAL, VLINES_I = VTOTAL, H_BLANKI, V_BLANKI, etc.), the encoder switches into the 3:2 Clock mode. While in this operational state, additional solutions in the overscan-compensation-pairs domain for higher resolutions now exist. In addition, the encoder now allows the data master (e.g., graphics controller) to send digital data to it at a faster rate than is clocked out of the encoder. Specifically, the CX25870/871 begins to transfer pixels out at a rate of [2/3] that of the CLKI input frequency. In other words, the pixel input frequency clocks in data at a ratio of [3:2] or 1½ times faster than the CX25870/871 outputs the analog pixel data. In this mode, the encoder's expansive on-chip FIFO bridges the frequency difference that now exists between the digital-timing input and mixed-signal encoder output blocks of the CX25870/871. The result is a much closer match in the available overscan percentages in the horizontal and vertical direction for the higher resolutions. This ensures the TV Out picture appears more orthogonal where the amount of blanking is nearly equal on all sides of the image.

Since the Horizontal Blanking Time only becomes a critical issue at higher resolutions, the user should use a 3:2 Clocking Mode only when necessary at 800x600, and always at 1024x768. For software programming ease, some of the autoconfiguration modes for 800x600 and all for the 1024x768 resolution are 3:2 solutions already. The specific modes that use the 3:2 clock feature are contained in Appendix C and summarized in Table 1-6 below.

Table 1-6. Autoconfiguration Solutions that Utilize 3:2 Clocking Mode

Autoconfiguration Mode #	Active Resolution	Type of Digital Input	Overscan Ratio	Video Output Type
10	1024x768	RGB	Standard	NTSC
11	1024x768	RGB	Standard	PAL-BDGHI
14	1024x768	YCrCb	Standard	NTSC
15	1024x768	YCrCb	Standard	PAL-BDGHI
18	800x600	RGB	Lower	NTSC
22	800x600	YCrCb	Lower	NTSC
26	1024x768	RGB	Lower	NTSC
30	1024x768	YCrCb	Lower	NTSC
34	800x600	RGB	Higher	NTSC
40	800x600	RGB	Alternate	NTSC
42	1024x768	RGB	Higher	NTSC
43	1024x768	RGB	Higher	PAL-BDGHI

If the desired overscan ratio is not available via a particular autoconfiguration mode, you should derive another 3:2 Solution via Super Cockpit (i.e., CX25870 register programming tool), or contact your local FAE directly. If done correctly, this CX25870/871 register set will have PLL_32CLK (bit 5 of register 0x38) set and adjust the timing registers appropriately.

1.3.7 Master, Pseudo-Master, and Slave Interfaces

Like its predecessor, the Bt868/869, the CX25870/871 encoder can be operated in three possible interfaces. These connection types are named master, pseudo-master, and slave. The clocking ability of the master device and direction of the timing signals dictate what particular interface is used between the Conexant encoder and graphics controller/data master device.

1.3.7.1 Master Interface

In master interface, CLKO, HSYNC*, VSYNC*, and BLANK*, are generated by the encoder as outputs. These signals' leading edges denote when a new clock period, new line, and new frame starts respectively. Because the encoder transmits the clock and timing signals, this interface is also referred to as clocking master/timing master.

An illustration of the master interface is shown below using the graphics controller as the master device and S-Video and two Composite ports as the video outputs.

Figure 1-5. Operating the CX25870/871 in Master Interface

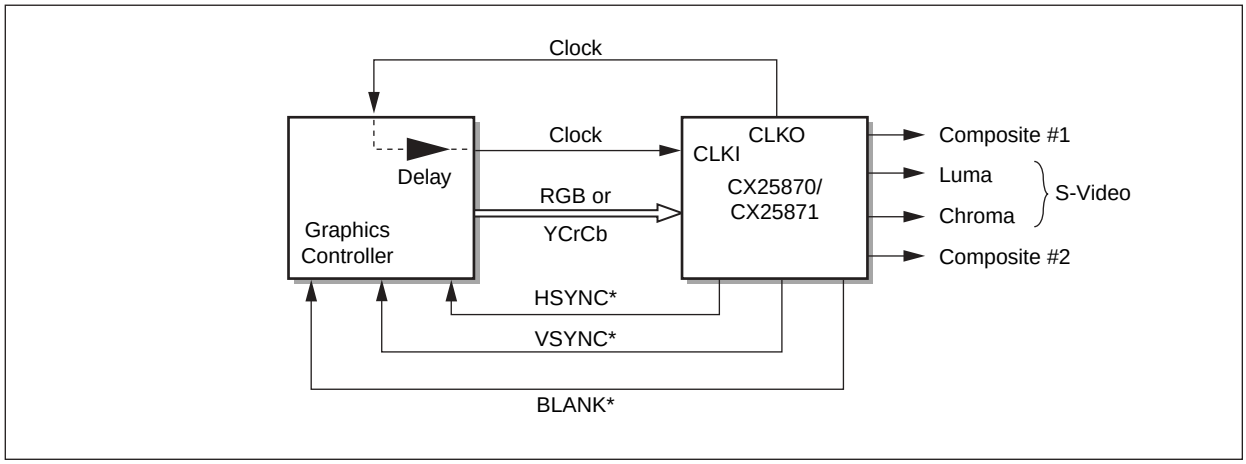

A minimum of 9 inputs (CLKI and 8 lines for pixel data- P[7:0]) and 3 outputs (HSYNC*, VSYNC*, and CLKO) are required for this configuration. The amount of inputs could grow as high as 25 if 24-bit RGB nonmultiplexed mode is chosen as the Input Pixel Mode (i.e., IN_MODE[3:0] = 0011) by the designer.

Master interface can only exist if the graphics controller can accept the encoder's reference clock and send back a version of that clock at the same frequency with the pixel data transitions synchronized to CLKI's rising and falling edges. This is accomplished via the VGA encoder's clock output (CLKO) and clock input (CLKI) ports.

1.3.7.2 Reason for BLANK*

If the graphics controller possesses pixel-based resolution (i.e., pixels are only a single pixel clock wide) then the encoder does not have to transmit or receive the BLANK* signal. However, for graphics controllers that are character clock based, a BLANK* signal is necessary.

The BLANK line is necessary because a character clock is actually 8 or 9 pixel clocks in duration. This causes several pixel clocks to elapse, resulting in an erroneous delay prior to the next HSYNC* being observed by the encoder and the next line starting. The only method of compensating for this delay is for character clock based controllers to use the BLANK* signal. This signal is required in the physical interface to indicate the exact location of the first active pixel on each line.

1.3.7.3 Pseudo-Master Interface

In pseudo-master interface, the CX25870/871 generates clock reference signal, CLKO as an output. This signal's purpose is to inform the graphics controller the exact frequency at which the data must be sent to the encoder. Timing signals, HSYNC*, VSYNC*, and BLANK*, are received by the encoder as inputs. The leading edges of these signals denote when a new clock period, new line, and new frame starts, respectively. Because this connection scheme shares mastering responsibilities, the interface is also named clocking master/timing slave.

An illustration of the pseudo-master interface is illustrated below using the graphics controller as the timing master device.

Figure 1-6. Operating the CX25870/871 in Pseudo-Master Interface

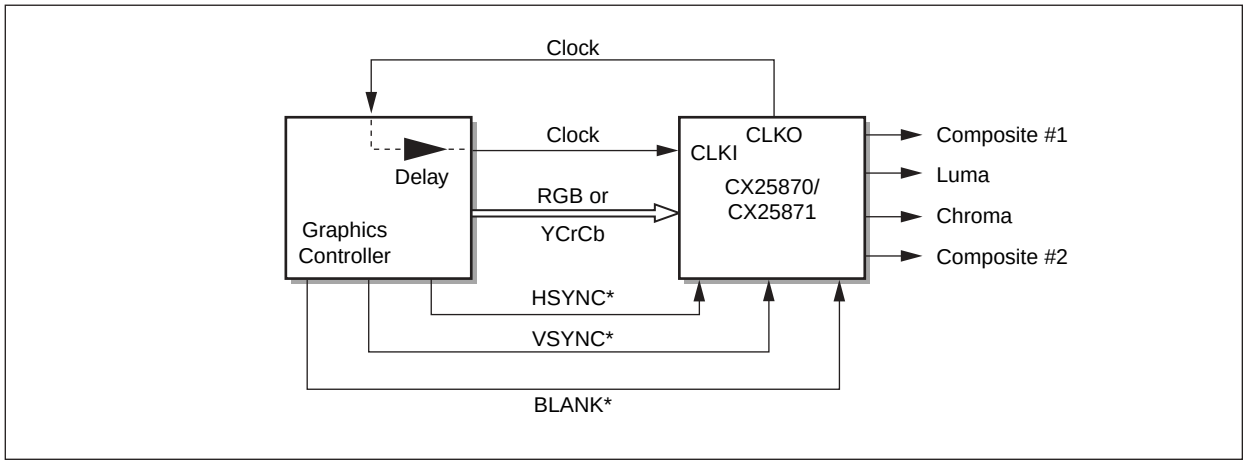

100381_055

A minimum of 11 inputs (CLKI, HSYNC*, VSYNC*, and 8 lines for pixel data- P[7:0]) and 1 output (CLKO) are required for this configuration. The amount of inputs could grow as high as 28 if 24-bit RGB nonmultiplexed mode is chosen as the Input Pixel Mode (i.e., IN_MODE[3:0] = 0111) by the designer.

Pseudo-Master interface can only exist if the graphics controller can accept the encoder's reference clock and send back a version of that clock at the same frequency with the pixel data transitions synchronized to CLKI's rising and falling edges. This is accomplished via the VGA encoder's clock output (CLKO) and clock input (CLKI) ports.

1.3.7.4 Slave Interface

In slave interface, no output signals are generated by the encoder. The CX25870/871 relies strictly on the graphics controller to send clock and timing signals to trigger when a new clock period, new line, and new frame starts. Because no frequency reference signal is used (CLKO), the master device must pre-program the encoder with an appropriate register set so the CX25870/871 expects data at the specific digital pixel rate prior to actually receiving the data. In addition, the timing signals must be shaped so they adhere to the appropriate slave interface timing diagrams illustrated in Chapter 4.0. Due to the added complexity of this interface, Conexant recommends its use only as a final option.

The slave interface is illustrated in Figure 1-7 below using the graphics controller as the master device and S-Video and 2 Composite ports as the video outputs.

Figure 1-7. Operating the CX25870/871 in Slave Interface

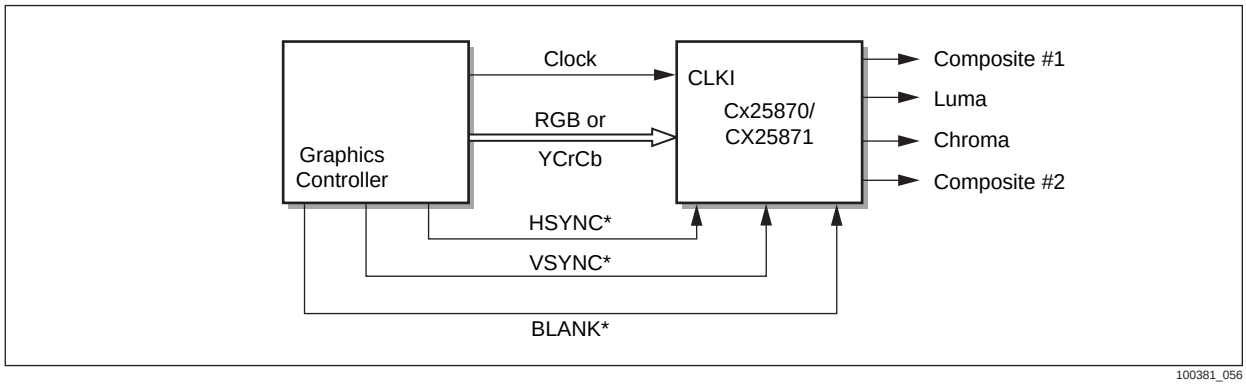

A minimum of 11 inputs (CLKI, HSYNC*, VSYNC*, and P[7:0]) are required for this configuration. The amount of inputs will increase to 15 (without BLANK*) or 16 (with BLANK*) if 24-bit multiplexed RGB mode is chosen as the Input Pixel Mode (i.e., IN_MODE[3:0] = 0000) by the designer.

It is highly recommended that the device operate in master or pseudo-master interface to ensure that the input and output video streams remain synchronized. If either the master device, supplying the HSYNC* and VSYNC* inputs, or the encoder, which receives the data, is not correctly programmed, the output image will lose lock with the input. By running the CX25870/871 in either clock master interface, any timing errors that occur can be absorbed to some extent by the expansive on-board FIFO.

1.3.7.5 Slave Interface Without a Crystal

For price-sensitive applications, it is possible to remove the crystal found between the XTALIN and XTALOUT ports and strictly utilize the incoming CLKI signal as both the data transfer mechanism and internal main clock source for the encoder. To complete this architecture, the data master must also program the CX25870's EN_XCLK bit to 1. This will trigger CLKI to be used for all operations requiring a clock source and force the encoder to ignore any oscillations received via its XTALIN and XTALOUT pins. The flicker filter and timing blocks will utilize this asynchronous clock on the input side for data processing, and the encoder will combine its internal PLL and CLKI in conjunction with the DACs to transmit video from the device.

Since CLKI will be the only incoming frequency reference, the encoder uses this signal to run its internal PLL for derivation of the video color subcarrier (Fsc). Since PAL and SECAM televisions are not lenient in accepting color subcarrier frequencies with more than 25 ppm error (i.e., Fsc ± 330 Hz), it is critical the data master maintain a very high level of accuracy for the incoming clock. In numerical terms, this means that the incoming clock should always remain within a window of {ideal CLKI} ± 25 ppm. As an example, for autoconfiguration mode #1, CLKI would have to reside in the range [29.499270 MHz < ideal CLKI = 29.500008 MHz < 29.500746 MHz.]

Tight control of the incoming digital clock ensures that the CX25870 generates an analog Fsc of 4.433618 MHz ± 338 Hz for PAL-BGHI or 4.250000 / 4.406250 MHz ± 338 Hz for SECAM. Actual testing has found that excursions outside this range result in loss of color for PAL and SECAM televisions and sometimes affect NTSC sets in the same manner.

When the CX25870 is receiving an external clock, its serial bus is also dependent on this incoming signal. As a result, the data master should never disable the input clock. If this happens, even momentarily, the only way the encoder can recover is for the data master to pin RESET* the CX25870. The encoder will then be re-enabled as a timing master and respond again to serial commands transmitted by the data master.

Several other registers must be reprogrammed to make this special type of interface work properly. Consult your local Conexant representative for technical assistance.

1.3.8 Autoconfiguration and Interface Bits

The default operation of the CX25870/871 is tied into its 44 autoconfiguration modes. Autoconfiguring the device occurs when bits CONFIG[5:3] and CONFIG[2:0] in register 0xB8 are programmed to any state from 000000 to 101111. At the conclusion of this serial write, default values are copied from the CX25870/871's internal ROM into the most important timing registers that have the indices 0x38 and 0x76 to 0xB4, inclusive. All other registers are not changed at the conclusion of an autoconfiguration mode.

After an autoconfiguration command, the CX25870/871 device remains in the same interface it was in before the command execution. Depending on which autoconfiguration mode# was initiated, the CX25870/871 will expect to receive either a 320x200, 320x240, 640x400, 640x480, 720x400, 720x480, 720x576, 800x600, or 1024x768 active digital input frame and output a NTSC or a PAL composite and/or S-video signal. See Table 2-5 of this data sheet for a description of CONFIG[5:0] and Appendix C for more detail on each autoconfiguration mode.

Using an autoconfiguration mode is the easiest method for bringing up the most popular desktop, game/Direct X, DOS boot-up screen, and DVD resolutions with the encoder as both the timing and clock master. This is true even if the graphics controller cannot utilize the CX25870/871 in master mode but must use pseudo-master mode. To turn the direction of the SYNCs around so they are transmitted by the graphics controller and received by the CX25870/871 simply requires reprogramming the encoder via several serial writes.

The Interface bits that need to be changed are SLAVER, EN_BLANKO, EN_DOT, and EN_OUT. Since the abilities of graphics controllers vary greatly, Tables 1-7 through 1-12 have been compiled below to explain the relationship between the Interface bits and the actual interface itself. Even more permutations of the following interfaces below are possible but Tables 1-7 to 1-12 capture the six most popular architectures.

Table 1-7. Master Interface without a BLANK* Signal (Default Immediately after any Autoconfiguration Command)

Interfaced Used	SLAVER (Bit 5 of 0xBA) ORed with Slave Pin	EN_BLANKO (MSb of Register 0xC6)	EN_DOT (Bit 6 of Register 0xC6)	EN_OUT (LSb of Register 0xC4)
MASTER (default) BLANK* is an output from the CX25870/871 or BLANK* µs NOT included as part of the interface.	0	1	0	1

- If the SLAVE pin is tied to GND, the state of the SLAVER bit dictates whether the CX25870/871 is the timing master or timing slave by controlling the direction of the HSYNC* and VSYNC* ports. In other words, SLAVER will determine whether the overall interface is master or pseudo-master. The SLAVER bit allows the graphics controller vendor to switch between master video timing and slave video timing through software so long as the SLAVE pin (#51) is low.
- EN_BLANKO is high (=1), signifying the CX25870/871's BLANK* port is an output or that NO BLANK* signal is used as part of the system.
- EN_DOT = 0 telling the CX25870/871 to use its internal counters to determine the active versus the blanking regions.
- EN_OUT = 1 ensures there is a clock output (CLKO) from the CX25870/871 and also enables HSYNC* and VSYNC* outputs.

Table 1-8. Master Interface with a BLANK* Input to the CX25870/871

Interfaced Used	SLAVER (Bit 5 of 0xBA) ORed with Slave Pin	EN_BLANKO (MSb of Register 0xC6)	EN_DOT (Bit 6 of Register 0xC6)	EN_OUT (LSb of Register 0xC4)
MASTER BLANK* SIGNAL transmitted to the CX25870/871 and received as an input.	0	0	1	1

- If the SLAVE pin is tied to GND, the state of the SLAVER bit dictates whether the CX25870/871 is the timing master or timing slave by controlling the direction of the HSYNC* and VSYNC* ports. In other words, SLAVER determines whether the overall interface is master or pseudo-master. The SLAVER bit allows the graphics controller vendor to switch between master video timing and slave video timing through software so long as SLAVE pin (#51) is low.
- EN_BLANKO is low (= 0), signifying the CX25870/871's BLANK* port is an input.
- EN_DOT = 1 telling the CX25870/871 to use the BLANK* signal it is receiving to determine where active video starts (rising edge of BLANK*) and uses HACTIVE register to determine the start of the blanking region.
- EN_OUT = 1 ensures there is a clock output (CLKO) from the CX25870/871 and also enables HSYNC* and VSYNC* outputs.

Table 1-9. Pseudo-Master Interface without a BLANK* Signal

Interfaced Used	SLAVER (Bit 5 of 0xBA) ORed with Slave Pin	EN_BLANKO (MSb of Register 0xC6)	EN_DOT (Bit 6 of Register 0xC6)	EN_OUT (LSb of Register 0xC4)
PSEUDO MASTER BLANK* is NOT included as part of the interface.	1	1	0	1

- SLAVER bit = 1 so the CX25870/871 is the video timing slave. It expects to receive the syncs from the graphics controller.
- EN_BLANKO is high(=1), signifying the CX25870/871's BLANK* port is an output or that NO BLANK* signal is used as part of the system.
- EN_DOT = 0 telling the CX25870/871 to use its internal counters to determine the active versus the blanking regions.
- EN_OUT = 1 ensures there is a clock output (CLKO) from the CX25870/871.

Table 1-10. Pseudo-Master Interface with a BLANK Input to the CX25870/871*

Interfaced Used	SLAVER (Bit 5 of 0xBA) ORed with Slave Pin	EN_BLANKO (MSb of Register 0xC6)	EN_DOT (Bit 6 of Register 0xC6)	EN_OUT (LSb of Register 0xC4)
PSEUDO MASTER BLANK* SIGNAL transmitted to the CX25870/871 and received as an input.	1	0	1	1

- SLAVER bit = 1 so the CX25870/871 is the video timing slave. It expects to receive the syncs from the graphics controller.
- EN_BLANKO is low (= 0), signifying the CX25870/871's BLANK* port is an input.
- EN_DOT = 1 telling the CX25870/871 to use the BLANK* signal it is receiving to determine where active video starts (rising edge of BLANK*) and where the blanking region starts (falling edge).
- EN_OUT = 1 ensures there is a clock output (CLKO) from the CX25870/871.

Table 1-11. Slave Interface without a BLANK Signal*

Interfaced Used	SLAVER (Bit 5 of 0xBA) ORed with Slave Pin	EN_BLANKO (MSb of Register 0xC6)	EN_DOT (Bit 6 of Register 0xC6)	EN_OUT (LSb of Register 0xC4)	EN_XCLK (MSb of Register 0xA0)
SLAVE BLANK* is NOT included as part of the interface.	1	1	0	0	1

- After an autoconfiguration command, the CX25870/871 expects active low VSYNC* and HSYNC* signals from the controller. The format of pixels at input of encoder needs to be 24-bit RGB multiplexed unless modifications are made to the IN_MODE[3:0] 4-bit sequence.
- In addition to Table 1-11, another bit must be programmed manually with this interface. The most significant bit of CX25870/871 register 0xA0 must be set. This guarantees that EN_XCLK is high (=1) which will allow the CX25870/871 to accept CLKI as the pixel clock source.

- SLAVER bit = 1 the CX25870/871 is the video timing slave. It expects to receive the syncs from the graphics controller. Since the CX25870 is in slave mode, the HSYNC* and VSYNC* outputs will be three-stated and the CX25870/871 will be set up to receive these timing signals from the graphics controller.
- EN_BLANKO is high (=1), signifying the CX25870/871's BLANK* port is an output or that NO BLANK* signal is used as part of the system.
- EN_DOT = 0 telling the CX25870/871 to use its internal counters to determine the active versus the blanking regions.
- EN_OUT = 0: This ensures the clock output port (CLKO) is three-stated from the encoder.

Table 1-12. Slave Interface with a BLANK* Input to the CX25870/871

Interfaced Used	SLAVER (Bit 5 of 0xBA) ORed with Slave Pin	EN_BLANKO (MSb of Register 0xC6)	EN_DOT (Bit 6 of Register 0xC6)	EN_OUT (LSb of Register 0xC4)	EN_XCLK (MSb of Register 0xA0)
SLAVE BLANK* SIGNAL transmitted to the CX25870/871 and received as an input.	1	0	1	0	1

- After an autoconfiguration command, the CX25870/871 expects active low VSYNC* and HSYNC* signals from the controller. The format of pixels at input of encoder needs to be 24-bit RGB multiplexed unless modifications are made to the IN_MODE[3:0] 4-bit sequence.
- In addition to Table 1-11, another bit must be programmed manually with this interface. The most significant bit of CX25870/871 register 0xA0 must be set. This guarantees that EN_XCLK will be high (=1) which will allow the CX25870/871 to accept CLKI as the pixel clock source.
- SLAVER bit = 1 so the CX25870/871 is the video timing slave. It will expect to receive the syncs from the graphics controller. Since the CX25870 is in slave mode, then the HSYNC* and VSYNC* outputs will be three-stated and the CX25870/871 will be set up to receive these timing signals from the graphics controller.
- EN_BLANKO is low (= 0), signifying the CX25870/871's BLANK* port is an input.
- EN_DOT = 1, telling the CX25870/871 to use the BLANK* signal it is receiving to determine where active video starts (rising edge of BLANK*) and the HACTIVE register to denote where the blanking region starts.
- EN_OUT = 0: This will ensure the clock output port (CLKO) is three-stated from the encoder.

NOTE: Autoconfiguration Mode #28 and #29 for NTSC and PAL DVD Playback place the encoder into slave interface where it expects a BLANK* input (Table 1-11).

1.3.9 Adaptations for Clock-Limited Master Devices

Ideally, the graphics controller or proprietary ASIC, in combination with the CX25870/871, operates in either master or pseudo-master interface. Occasionally, using either of the clock master configurations is not possible because the master device does not have the capabilities of receiving a clock from the encoder nor can it synchronize the digital data with this clock on its return. If either limitation exists, only slave interface can be used for the system configuration. Often, within the slave interface, the data master can only generate certain discrete clock frequencies. This means the encoder has to make extra accommodations for normal TV Out to occur.

Fortunately, the encoder does have the flexibility to adapt to almost any incoming clock frequency in the range from 20 MHz to 80 MHz. All that is required is to follow the procedure in Table 1-13 which forces the encoder to accept a frequency through CLKI that does not match any CX25870/871 autoconfiguration frequency. Once the CX25870/871's 4-byte wide MSC register is reprogrammed accordingly, the result is the generation of the correct color subcarrier frequency for NTSC or PAL and corresponding proper S-Video or Composite TV output.

Table 1-13 and Table 1-14 contain the procedures required for the encoder to accept a frequency through CLKI that is not equal but is close to the chosen CX25870/871 autoconfiguration mode clock frequency. Completion of the steps contained in the two tables will modify the MSC register and PLL_INT and PLL_FRACT registers correctly and thus produce an accurate NTSC or PAL analog output.

Table 1-13. Adjustment to the CX25870/871 MSC Registers

1. What is input frequency to CX25870/871's CLKI input from data master?
2. Depending on answer to step 1, find an autoconfiguration mode that has a frequency close to the incoming input frequency (within 1 MHz is preferred).
3. Look up the clock frequency for the chosen autoconfiguration mode in Appendix C of the CX25870/871 data sheet.
4. Determine the scaling factor 'x' where

   $$x = \frac{\text{input frequency to CLKI input (usually from data master)}}{\text{autoconfiguration mode frequency as specified in Appendix C}}$$

5. Determine the autoconfiguration mode's MSC[31:0] value in hex by reading back the CX25870/871's registers; 0xB4(=MSB), 0xB2, 0xB0, 0xAE(=LSB). These register values can also be found by looking them up in Register C. The values determined will have to be cascaded together.
6. Convert the MSC[31:0] 4-byte hexadecimal value to decimal.
7. Divide the total found from step 6 by the scaling factor 'x' found from step 4.
8. Convert the answer from step 7 to the hexadecimal format. This value should be comprised of a total of 4 bytes. The most significant byte will likely not change from the previous value in register MSC[31:24]. Other MSC values may not change either but the least significant bytes should have definitely been modified.
9. Program the bytes determined from step 8 into the CX25870/871's MSC[31:0] registers. Write these bytes in order to registers 0xB4 (most significant byte = MSC[31:24]), 0xB2, 0xB0, and 0xAE (least significant byte = MSC[7:0]).

Table 1-14. Adjustment to the PLL_INT and PLL_FRACT Registers

1. What is input frequency to CX25870/871's CLKI input from data master?
2. Depending on answer to step 1, find an autoconfiguration mode that has a clock frequency close to the incoming CLKI frequency (within 1 MHz is preferred).
3. Look up the desired clock frequency for the chosen autoconfiguration mode in Appendix C of the CX25870/871 data sheet.
4. Determine the scaling factor 'x' where:

$$x = \frac{\text{input frequency to CLKI input (usually from data master)}}{\text{autoconfiguration mode frequency as specified in Appendix C}}$$

5. Determine the PLL_INT value in hex by reading back the CX25870/871's register 0xA0 for that autoconfiguration mode. This register value can also be found by looking it up in Appendix C.
6. Convert the PLL_INT register value to decimal.
7. Multiply the answer found in step 6 by $2^{16} = 65536$.
8. Determine the PLL_FRACT value in hex by reading back the CX25870/871's register 0x9E and 0x9C. These two registers cascade to form the PLL_FRACT[15:0] 2-byte value. These register values can also be found by looking them up in Appendix C.
9. Convert the 2-byte PLL_FRACT register value to decimal.
10. From steps 7 and 9, add the PLL_INT and PLL_FRACT decimal values.
11. Multiply the total found from step 10 by the scaling factor 'x' found from step 4.
12. Convert the answer from step 11 to the hexadecimal format. The value should be comprised of a total of three bytes. The most significant byte will likely be the original PLL_INT[7:0] byte from step 2.
13. Program the bytes determined from step 12 into the CX25870/871's PLL_INT[7:0] and PLL_FRACT[15:0] registers. The most significant byte from step 12 is the new PLL_INT value. Write this to register 0xA0. The 2 least significant bytes from step 12 is the new PLL_FRACT value. Write these bytes in order to registers 0xBE and 0xBC respectively.

1.3.10 Input Formats

The device can convert a wide range of input formats to analog standard or HDTV television video formats. The input can be either noninterlaced or interlaced digital data from 320 x 200 to a maximum of 1024 x 768 pixels per frame for standard TV outputs. While generating HDTV outputs the device can accept greater than 1024 x 768 input frames. Many other nonstandard input formats can be encoded as well. For detailed information on the CCIR601 mode, please refer to the *DVD Movie Playback Architecture and Solutions Application Note*. This application note can be obtained from your local Conexant Systems sales office.

For instructions on how to display nonstandard resolutions on the TV, request the "Supporting TV Out with Non-Standard Graphics Input Resolutions" Application Note from your local Conexant Systems sales office.

1.3.11 Input Pixel Timing

The device can accept the input data in either RGB or YCrCb color spaces. Data can be input either a full pixel at a time clocked in on the rising edge of CLKI only, or in various multiplexed modes, using both edges of CLKI.

In YCrCb format, either 24-bit 4:4:4 data or 16-bit 4:2:2 data can be input. In RGB format, either 15-bit 5:5:5, 16 bit 5:6:5, or 24-bit RGB can be input. In 16-bit 4:2:2 YCrCb input format, multiplexed Y, Cr, and Cb data is input through the P[11:4] or P[7:0]input pins. The Y data is input on the falling edge of CLKI. The Cr/Cb data is input on the rising edge of CLKI. The Cb/Y/Cr/Y sequence begins at the first active pixel. An additional 4:2:2 YCrCb input format maps Y to P[19:12] and Cr/Cb multiplexed on P[11:4]. In 24-bit 4:4:4 YCrCb input format, multiplexed Y, Cr, and Cb data is input through the P[11:0] inputs. Both the rising and falling edge of CLKI sample the input data.

In RGB input format, input data is sampled as 12 bits at a time in 24-bit RGB format or 8 bits at a time in 15/16 bit RGB format on both the rising and falling edge of CLKI. Table 1-2 shows the data pin assignments for all available multiplexed input formats.

In addition, all 24-bit formats, a 16-bit RGB format, and a 16-bit YCrCb format can utilize the nonmultiplexed clocking method. See Table 1-3 for these pin-to-bit assignments.

1.3.12 YCrCb Inputs (For Standard TV Outputs)

Y has a nominal range of 16–235; Cr and Cb have a nominal range of 16–240, with 128 (80 hex) equal to zero. Values of 0 and 255 are interpreted as 1 and 254, respectively. Y values of 1–15 and 236–254, and CrCb values of 1–15 and 241–254, are interpreted as valid linear values.

Figure 1-8 illustrates the frequency response of the sub-sampling process. If 4:4:4 data is input, it is subsampled to 4:2:2 prior to overscan compensation and flicker filtering.

Figure 1-8. Decimation Filter at Fs=27 MHz

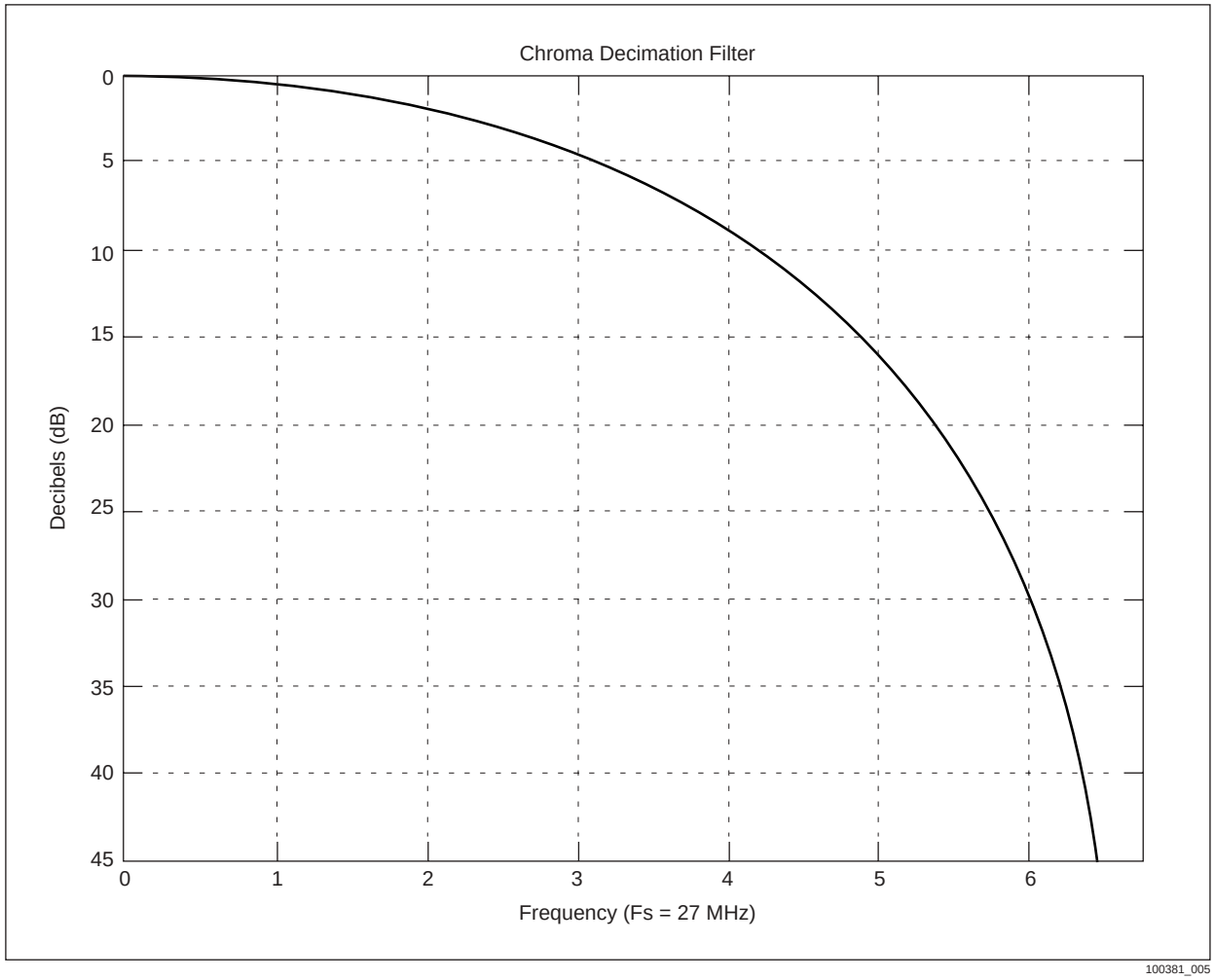

The resulting 4:2:2 output must then be converted to YUV values and then scaled for the output range of the DACs. The MY, MCR, and MCB registers must be programmed to perform this conversion. The scaling equations are as follows:

$MY = (int)\ [V100/(219.0 * V_{FS}) * 2^6 + 0.5]$
$MCR = (int)[(128.0/127.0) * V_{100} * 0.877/(224.0 * V_{FS} * 0.713 * sinx) * 2^6 + 0.5]$
$MCB = (int)[(128.0/127.0) * V_{100} * 0.493/(224.0 * V_{FS} * 0.564 * sinx) * 2^6 + 0.5]$

where: V_{100} *= 100% white voltage (0.661 V for NTSC, 0.7 V for PAL/SECAM)*
V_{FS} *= Full scale output voltage (1.28 V)*
F_{sc} = color subcarrier frequency (see Table A-2)
F_{clk} *= Analog pixel rate*
$Sinx = Sin\ (\pi \cdot F_{SC}/F_{CLK})/(\pi \cdot F_{SC}/F_{CLK})$

1.3.13 RGB Inputs (For Standard TV Outputs)

With IN_MODE[3:0] set to a RGB mode, the encoder must receive digital gamma-corrected RGB data as an input. If this occurs, the RGB data will be converted to Y/R-Y/B-Y as follows:

$$Y[9:0] = [INT(0.299 * 2^{10}) * R[7:0]\} + INT(0.587 * 2^{10} * G[7:0] + INT(0.114 * 2^{10}) * B[7:0] + 2^{7}] * 2^{-8}$$
$$0 \le Y[9:0] \le 1024$$

For 15 and 16 bit RGB input formats, individual R, G, and B values are left justified to eight bit numbers.

After the initial conversion, the Y/R-Y/B-Y values are sub-sampled to 4:2:2 data prior to overscan compensation and flicker filtering.

The resulting 4:2:2 output must then be converted to YUV values and then scaled for the output range of the DACs. The MY, MCR, and MCB registers must be programmed to perform this conversion. The scaling equations are:

$$MY = (int)[V_{100}/(255 * V_{FS}) * 2^{6} + 0.5]$$
$$MCR = (int)[(128.0/127.0) * V_{100} * 0.877/(127 * V_{FS} * sinx) * 2^{5} + 0.5]$$
$$MCB = (int)[(128.0/127.0) * V_{100} * 0.493/(127 * V_{FS} * sinx) * 2^{5} + 0.5]$$

where: V_{100} *= 100% white voltage (0.661 V for NTSC, 0.7 V for PAL)*
V_{FS} *= Full scale output voltage (1.28 V)*
F_{sc} = color subcarrier frequency (see Table A-2)
F_{clk} *= CLKI input frequency*
$Sinx = Sin\ [(2\pi\ F_{SC}/F_{CLK})/(2\pi\ F_{SC}/F_{CLK})]$

For SECAM formulas see the SECAM section.

1.3.14 Input Pixel Horizontal Sync

The HSYNC* pin provides line synchronization for the pixel input data. It is an output in master interface and an input in slave and pseudo-master interface. In the master interface, it is a pulse two CLKI cycles in duration whose leading edge indicates the beginning of a new line of pixel data. The period between two consecutive HSYNC* pulses is H_CLKI CLK cycles. The first active pixel should be presented to the device H_BLANKI minus the internal pipelined clock (5 CLK cycles) after the leading edge of HSYNC*. The next H_ACTIVE pixels are accepted as active pixels and used in the construction of the output video. In the slave interface the exact number of clocks per line (H_CLKI) must be provided as calculated for the desired overscan ratio. Only the leading edge of HSYNC* is used, low times must be at least two CLKI cycles in duration. HSYNC* is clocked into the encoder by the rising edge of CLKI.

The polarity of the HSYNC* signal is changed by the HSYNCI register bit. The default convention is active low.

1.3.15 Input Pixel Vertical Sync

The VSYNC* pin provides field synchronization for the pixel input data. It is an output in master interface, and an input in the slave and the pseudo-master interface.

For noninterlaced input timing in master interface, VSYNC* is a pulse one horizontal line time in duration whose leading edge indicates the beginning of a frame of input pixel data. The leading edge coincides with the leading edge of HSYNC*. The period of the pulses is V_LINESI horizontal lines. The first line of active data should be presented to the device V_BLANKI lines after the leading edge of VSYNC*. The next V_ACTIVEI lines are accepted as active lines and used in the construction of the output video.

The CX25870/871 disregards lines after the leading edge of VSYNC* but before VSYNC* + V_BLANKI lines by not encoding them. In slave interface, the period must be exactly the frame rate of the desired video format. Only the leading edge is used, and the high and low duration must be at least two CLKI cycles. The beginning of the frame of data is indicated by the next leading edge of HSYNC* coincident with or after the leading edge of VSYNC*.

For interlaced input timing, only the slave interface is supported. The period must be exactly the frame rate of the desired video format. If the leading edge of HSYNC* and VSYNC* are coincident, that indicates the input is in odd field, the internal line counter is reset to line 1 at the leading edge of VSYNC*. If the leading edges of HSYNC* and VSYNC* are not coincident, and separated by a minimum of two CLKI cycles, this indicates the input is an even field. In this case, the internal line counter is reset to line 2 at the beginning of the next line. Only the leading edge of VSYNC* is used, and the high and low VSYNC* width must be at least two CLKI cycles. VSYNC* is clocked in by the rising edge of CLKI.

The polarity of the VSYNC* input and output can be programmed by the VSYNCI register bit. The default convention is active low. The FLD_MODE bits allow further flexibility in HSYNC* and VSYNC* timing relationship.

1.3.16 Input Pixel Blanking

Input pixel blanking can be controlled by either the BLANK* pin or by the internal registers. Blanking can be programmed independently of master or slave interface using the EN_BLANKO register bit. As an output (EN_BLANKO = 1), pixel blanking is generated based on the active area defined by H_BLANKI, H_ACTIVE, V_BLANKI, and V_ACTIVEI registers. With EN_BLANKO = 1, the BLANK* pin is output in the proper relationship to the syncs to indicate the location of active pixels. As an input (EN_BLANKO = 0), when the BLANK* pin goes high, it indicates the start of active pixels at the pixel input pins. In addition, the H_BLANKI register must be programmed properly. The duration of active data is still determined by the H_ACTIVE register. BLANK* is clocked by the rising edge of CLKI.

An additional function for the BLANK* pin is used if the EN_DOT register bit is set. If EN_DOT = 1, the BLANK* pin becomes an input whose rising edge defines the graphics controller character clock boundary. This is used internally by the encoder to keep track of the exact pixel count for controllers that cannot operate at pixel clock rates but instead operate at VGA character clock rates.

The polarity of the BLANK* input/output can be programmed by the BLANKI register bit. The default convention is active low.

Table 1-15 summarizes the direction of the BLANK* encoder in each interface. For more information refer to Section 1.3.8.

Table 1-15. Summary of Allowable BLANK* Signal Directions by Interface

Interface	Allowable Direction of BLANK*
Master	Input or Output
Pseudo-master	Input
Slave	Input

1.3.17 Overscan Compensation

Overscan compensation is the process by which the encoder converts the digital input lines to the appropriate number of output lines for producing a full-screen image on the television receiver. This conversion is done in accordance with the Vertical Scaling Ratio (VSR). VSR is the ratio of the number of input lines received to number of output lines generated by the CX25870 (i.e., 262.5 lines/field for NTSC and 312.5 lines/field for PAL-BDGHI and SECAM). Using the correct amount of compensation in both the horizontal and vertical dimensions (at least 10 percent) will ensure that the entire digital image normally seen on the PC monitor is satisfactorily mapped to the analog television without any pixels or lines hidden in unviewable areas.

Increasing the Horizontal Overscan Compensation (HOC) percentage while keeping the Vertical Overscan Compensation (VOC) percentage the same will have several effects on the VGA Encoder. First, the number of output clocks per line (H_CLKO) will increase. Correspondingly, the clock frequencies shared between the data master and CX25870 (i.e., CLKO = CLKI) will increase. Therefore, the original number of active pixels will be squeezed into a smaller analog video display region because the frequency at which input data is clocked into the CX25870 has increased. Since the CX25870 now processes active data at a faster rate than CCIR601-only compatible encoders, the graphics controller will need to transmit more blank pixels per line (i.e., HTOTAL must increase to match CX25870's H_CLKI) to make up the difference.

Increasing the (VOC) percentage while keeping the Horizontal Overscan Compensation percentage the same will have several different effects on the VGA Encoder. First, the H_CLKO total will stay the same as will the pixel rate (i.e., CLKI = CLKO). These parameters are dictated by the HOC value only. Second, the number of total vertical input lines (V_LINESI = data master's VTOTAL) will increase, which will increase the internal VSR. The net result is that more active pixels and more active lines will be used to generate each output line. The only way for the graphics controller to transmit these additional input lines with the same clock frequency as before is to decrease the amount of blanked pixels per line.

To support a custom overscan ratio, an entire set of overscan compensation calculations is required. This results in as many as 25 new register values for the CX25870. For ease of use, these equations are embedded into Conexant's programming application called Super Cockpit. Each computation is somewhat interdependent on the others but the basic overscan equations are as follows:

(*) VSR = (V_LINESI) / (# of total output lines per field)

and

(**) # Blanked Pixels = {[H_CLKO / VSR] – H_ACTIVE}

For illustrative purposes, the calculations used to generate the 13.785 percent HOC percentage for Autoconfiguration Mode 0–640x480 RGB in, H_CLKO = 1792, NTSC output, are shown below:

From Appendix C (CX25870/871 Data Sheet):
Number of clocks necessary to latch in the V.S.R. # of input lines for every 1 analog output line = 1792 CLKs [i.e., H_CLKO]

CX25870 must ensure input is 2X upsampled.

Therefore:
active CLKs per analog line = 2*(H_ACTIVE)
active CLKs per analog line = 1280 active CLKs per analog line

percent of input used to create active video area = {1280 active CLKs / 1792 total CLKs} = 71.4286 percent

Therefore:
(x) = active region percent of analog output line = 71.4286 percent
(y) = active region percent of typical analog video for NTSC = 52.65556 µs / 63.55556 µs = (y) = 82.4945 percent of line is active
Ratio of [x/y] = {71.4286 percent / 82.4945 percent} = 0.862147
HOC percentage = 1–{Ratio of [x/y]}
HOC percent = 1–0.862147 = 13.785 percent = HOC percentage for Autoconfiguration Mode 0

As a result, 13.785 percent of the horizontal active region within each line of an NTSC signal will be forcibly blanked by the CX25870. For most TVs, this will resize the upsampled digital image properly so all of the pixels fit horizontally within the bezeled area of North American or Japanese TVs. The 13.785 percent overscan percentage is equally distributed on either side of the horizontal active region (i.e., 13.785 percent / 2 = 6.89 percent extra blanking for the beginning and end of the line). The original 640 active pixels (i.e., H_ACTIVE) will then be 'squeezed' into the remaining analog active region due to the faster pixel rate.

The explanation of the vertical overscan percentage value is similar. For autoconfiguration mode #0, V_ACTIVEO is 212, which means there are 210 full active lines per field. The first and last lines are filtered lines that assist in smoothing the transitions into and out of the active region to avoid flickering and are not counted. Any NTSC standard calls for 243 active lines per field, so 210/243 = 0.864198 of the vertical active region is used. This calculation yields a vertical overscan compensation percentage of 100–86.4198 = 13.5802 percent.

Flicker filtering and vertical and horizontal overscan compensation are NOT SUPPORTED in any interlaced RGB or YCrCb input format sent to the CX25870. Interlaced input data is commonly used for DVD Out from a MPEG2 Decoder chip. Because of the data and image content types, flicker filtering and overscan compensation are not necessary in this case.

Illustrations showing the before and after effects of overscan compensation can be found in Figures 1-9 and 1-10.

Figure 1-9. Windows Desktop Image From Encoder Without Overscan Compensation

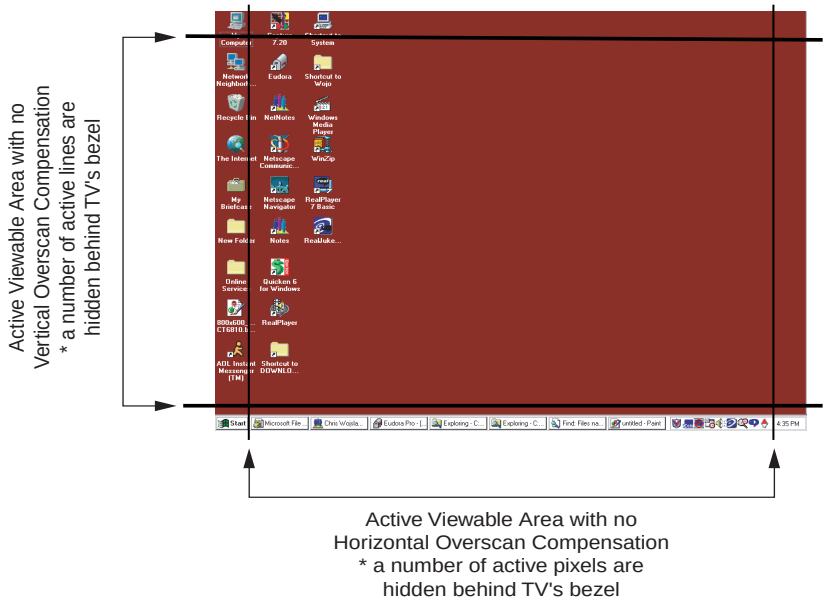

NOTE(S):
Overscan percentages taken from CX25870's Autoconfiguration Mode 0.

100381_072

Figure 1-10. Windows Desktop Image From CX25870 With Overscan Compensation

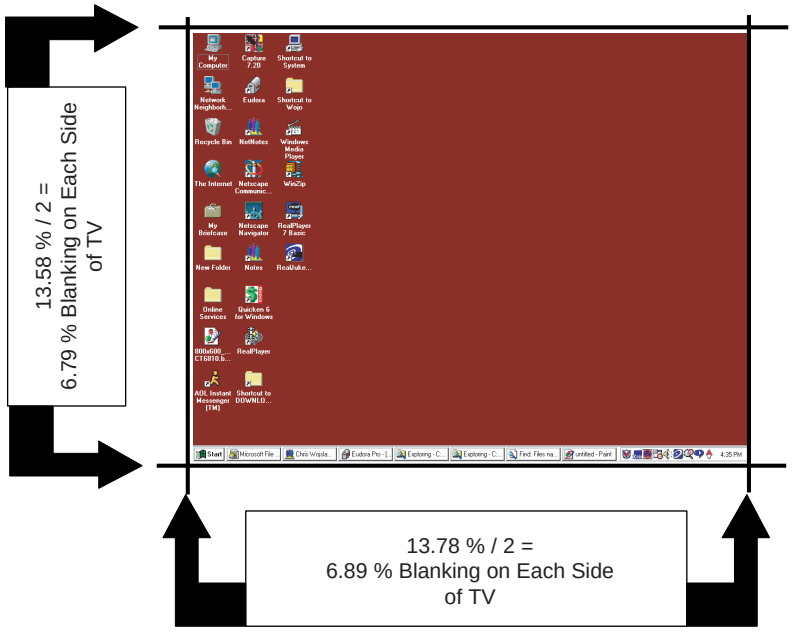

NOTE(S):
Overscan percentages taken from CX25870's Autoconfiguration Mode 0.

100381_073

In Figure 1-10, the CX25870 overscan compensated the 640 horizontal active pixels of data to fit within the viewable video region. With 13.78 percent HOC, the active data is contained within a 45.397 µs. portion of time within each active line while the remaining 7.26 µs (52.65556 µs.–45.397 µs.) part of the active region is blanked by the encoder.

The net result of overscan compensation will be an interlaced NTSC, PAL, or SECAM video image that fits within the bezel area of a TV Monitor. Correct choice of the HOC and Vertical Overscan Compensation (VOC) percentages is important so that no regions of the active input image will be hidden behind the plastic of the TV unit. Various TVs require different HOC and VOC values to fully utilize the entire viewable area of the TV. For the user's convenience, Conexant has generated Appendix A in the CX25870/871 datasheet which lists many of the possible overscan ratios for the 3 major desktop resolutions (640x480, 800x600, and 1024x768) and the 2 most popular video outputs (NTSC and PAL-BDGHI). Varying amounts of blanking would be required depending on the HOC and VOC percentages and active input resolutions.

Ultimately, the blanked regions would be dictated by the BLANK* signal itself and/or the internal pixel counter for the CX25870/871. Actual transmission of null or blanked pixels is not necessary since the encoder ignores any data sent to it via the pixel input port within the blanked regions. Only the active pixels need to be sent to the encoder from the controller during the digital active period.

Figures A-1 through A-8 illustrate many of the allowable overscan compensation percentage pairs for the major desktop resolutions and the most popular video outputs. These figures illustrate the minimum horizontal blanking times the data master must possess along with overscan compensation plots for pixel based data masters as well as 8-and 9-cycle character clock based graphics controllers.

1.3.18 Standard Flicker Filtering

To understand what flicker filtering is, one must understand two of the primary differences between the analog video standards used by TVs and the technology used in today's computer monitors.

First of all, computer monitors receive their video signal in a more basic, pristine form than TVs do. As discussed earlier, the video signal sent by a computer to its monitor is broken into multiple electrical components (red, green, blue and sync) while a TV signal has all necessary information combined into a single composite signal or separate Luma and Chroma analog channels (S-Video). In order to process this composite signal, a TV must break it up into its original components, inevitably degrading the picture quality and creating distortions.

A second factor contributing to the decreased quality of images displayed on TV monitors is interlacing, a technique by which a complete TV picture is drawn in two passes from top to bottom on the picture tube. In interlacing, the first pass paints all the "odd" lines and the second pass paints the "even" lines. Noticeable flicker occurs when the images in the odd lines are very different from the images in the even lines. As the odd and even lines are alternately displayed, the eye perceives the quick appearing and disappearing of visual information. This results the in the irritation called flicker. Flicker is especially noticeable when viewing thin horizontal lines that only take up a single row within the odd or even field. If, for example, the line happens to be on an odd row, it totally disappears every time the even rows are displayed resulting in that item appearing and disappearing at the field rate on the TV.

Unlike TV monitors, computer monitors paint an entire image in one pass from top to bottom, in a display format called noninterlaced or progressive. Images displayed in a noninterlaced format do not suffer from the same flicker problems.

For improved image quality and reduced flickering, the CX25870 contains a 5-tap or 5-line flicker filter for both the Luma (F_SELY[2:0]) channel and Chroma (F_SELC[2:0]) channel. The Conexant standard flicker-filter works by applying a mathematically weighted averaging algorithm to the incoming pixels of data from different lines. This slightly alters the digital information that is processed and eventually converted to the odd and even lines of a TV picture so that the alternating lines are more similar to each other. This way, when they appear and disappear in the interlacing process, the flicker is less noticeable. The more similar the lines are made to appear, the less flicker is visible.

However, the trade-off is that as flicker is reduced, more and more information is being altered by the encoder and potentially lost from the original picture. Vertical resolution is therefore sacrificed and text clarity suffers especially for small fonts below 10 points in size. For this reason, the amount of flicker filtering is programmable and should be controllable by the end user. Finding an optimal standard flicker filter setting for Luma and Chroma is somewhat subjective in nature and ensures that a pleasing image is seen on the television.

Unlike other encoders, the CX25870 integrates both a standard flicker filter and additional adaptive flicker filter. This implementation allows for the preservation of small font text clarity and other challenging video images lost with only one filtering step. The adaptive feature eliminates more flicker with less loss of resolution because it is able to selectively apply more aggressive flicker reduction only to those portions of an image where the effect will be beneficial. Encoders lacking this adaptive filter apply the standard flicker filtering process to the entire screen. Small text and icons often become unreadable and thin, horizontal lines may completely disappear. The CX25870's adaptive flicker filter prevents this from happening and is described in its own section within this document.

So long as progressive RGB or YCrCb data is received, the CX25870's flicker filter is effective with any active resolution from 320x200 to a maximum of 1024 x 768. The flicker reduction is present on any interlaced video output such as NTSC, PAL, or SECAM. The DIS_FFILT register bit turns off the standard flicker filter. The vertical scaling can be disabled by setting the internal V_SCALE register to 4096 for a noninterlaced input. Finally, the CX25870 supports up to 24-bit color processing, meaning that the converted image will feature the same depth of color as the original computer picture.

1.3.19 Adaptive Flicker Filter

Adaptive Flicker Filtering is a new feature included with the CX25870/871. It allows the encoder to automatically alter the amount of flicker filtering based on the image being processed. The result is a high-quality optimized image because the perfect balance between vertical resolution and flicker reduction has been achieved. The adaptive flicker filter is enabled via the ADPT_FF bit. There are four possible settings ranging from 2-line (most observable flicker, greatest vertical resolution) to 5-line (minimal observable flicker, moderate vertical resolution). The luminance and chrominance outputs are independent in terms of the level of adaptive flicker filtering. When the adaptive flicker filter is on, the manual flicker filter is off and vice versa.

Vertical filtering in the CX25870/871 serves three purposes:

- Vertical polyphase interpolation filtering to upsample the image data vertically. This increases the resolution and accuracy of the subsequent vertical downsampling required to fit the entire image into the visible region of the television.
- Anti-alias filtering to reduce aliasing artifacts when downsampling vertically.
- Flicker filtering to reduce the flicker produced when vertical high frequency content is displayed on an interlaced device.

The vertical interpolation filtering and vertical anti-alias filtering requirements are driven by the amount of vertical down scaling required, and do not vary substantially with image content. The flicker filtering requirement, however, is dependent upon the image content.

Regions of the image with vertical high frequency content will flicker in proportion to the amplitude of that high frequency content. Regions with high amplitude vertical high frequency content require substantial flicker filtering, but regions with low amplitude or no vertical high frequency content require little or no flicker filtering.

For this reason, the CX25870/871 provides adaptive flicker filtering. It analyzes the image content to detect areas that require strong flicker filtering, and adjusts its vertical filtering to apply stronger flicker filtering to those regions. This analysis and adjustment occurs on a pixel by pixel basis, so each pixel in the output line has the optimal amount of flicker filtering applied to it.

The Adaptive_FF1 and Adaptive_FF2 registers (0x34 and 0x36) configure the adaptive algorithm. The Y_ALTFF[1:0] and C_ALTFF[1:0] fields allow the selection of the alternative (i.e., stronger) flicker filter to combine with the standard flicker filter selected by fields F_SELY[1:0] and F_SELC[1:0] (register 0xC8). This creates an array of flicker filters for the Y channel and C channel respectively. The actual flicker filter applied for a given pixel output depends on the detection and location of any high amplitude vertical high frequency content within the input samples that creates that output pixel.

The amplitude of the high frequency content that triggers an adaptation of the flicker filter can be adjusted via the Y_THRESH[2:0] and C_THRESH[2:0] bit fields. The FFRTN bit offers two ways to combine the standard and alternate flicker filters to generate an array of flicker filters. The YSELECT bit allows the Chroma channel flicker filter to be adapted based on the Chroma channel or the Y (i.e., Luminance) channel content.

NOTE: Neither standard nor adaptive flicker filtering is supported by the CX25870/871 in noninterlaced video output formats (VGA style RGB, HDTV 480p, 720p).

Table 1-16 summarizes recommended configurations of the adaptive flicker filter for various types of image content and resolutions.

Table 1-16. Optimal Adaptive and Standard Flicker Filter Settings for Common PC Applications and Resolutions

	Standard FF settings		CX25870 Adaptive FF settings									Register 0x34	Register 0x36
Desktop Resolution/ Video Output Type	**FSEL_Y**	**FSEL_C**	**ADPT_FF**	**Y_ALTFF**	**C_ALTFF**	**Y_THRESH**	**C_THRESH**	**Y_SELECT**	**FFRTN**	**BYYCR**	**CHROMA_BW**	**Final Hex Value**	**Final Hex Value**
640x480 in, NTSC out	3-line	3-line	On=Checked	4-line	4-line	000	000	On	On	1	0	9B	C0
640x480 in, PAL-BDGHI out	3-line	3-line	On=Checked	4-line	4-line	100	100	On	On	1	0	9B	E4
800x600 in, NTSC out	4-line	4-line	On=Checked	5-line	5-line	010	010	Off	On	1	0	80	92
800x600 in, PAL-BDGHI out	4-line	4-line	On=Checked	5-line	5-line	010	010	On	On	1	0	80	D2
1024x768 in, NTSC out	5-line	5-line	On=Checked	5-line	5-line	110	110	On	Off	1	0	80	F6
1024x768 in, PAL-BDGHI out	5-line	5-line	On=Checked	5-line	5-line	110	110	On	Off	1	0	80	F6
Web Page Resolution/ Video Output Type	**FSEL_Y**	**FSEL_C**	**ADPT_FF**	**Y_ALTFF**	**C_ALTFF**	**Y_THRESH**	**C_THRESH**	**Y_SELECT**	**FFRTN**	**BYYCR**	**CHROMA_BW**	**Final Hex Value**	**Final Hex Value**
640x480 in, NTSC out	4-line	3-line	On=Checked	4-line	4-line	100	100	Off	Off	1	0	9B	24
800x600 in, NTSC out	4-line	4-line	On=Checked	5-line	5-line	010	010	Off	Off	1	0	80	12
1024x768 in, NTSC out	5-line	5-line	On=Checked	5-line	5-line	110	110	On	Off	1	0	80	F6
Word Processing Resolution/Video Output Type	**FSEL_Y**	**FSEL_C**	**ADPT_FF**	**Y_ALTFF**	**C_ALTFF**	**Y_THRESH**	**C_THRESH**	**Y_SELECT**	**FFRTN**	**BYYCR**	**CHROMA_BW**	**Final Hex Value**	**Final Hex Value**
640x480 in, NTSC out	3-line	3-line	On=Checked	4-line	4-line	010	010	Off	On	1	0	9B	92
800x600 in, NTSC out	4-line	4-line	On=Checked	5-line	5-line	100	100	On	Off	1	0	80	64

NOTE(S): Off means a '0' bit setting while On denotes a '1' bit setting.

1.3.20 VGA Registers Involved in the TV Out Process

Timing constraints for the CX25870/871 are driven by the timing requirements of the analog video output (NTSC, PAL, or SECAM) together with the active resolution and overscan compensation ratio (i.e., amount of blanking in the active region) of the television image. To explain what specific CRTC or VGA registers within the graphics controller need to be involved in displaying a nonstandard or desktop format on both a TV and CRT, one can work backwards from those output signal timing requirements to determine the input timing requirements.

Each output field has a vertical blanking region and an active region. These regions are defined relative to the vertical sync pulse, horizontal sync pulse, given format (i.e., number of lines per field), and a given pixel clock frequency (i.e., number of pixel clocks per line). Within each line of the active region there is a horizontal blanking period (that includes a horizontal sync pulse) and an active period (where the image data is located). Given those parameters, at least six registers within every generic graphics controller need to be changed for each active/total resolution.

Table 1-17 lists VGA/CRTC Registers Involved in TV Out Process.

Table 1-17. VGA/CRTC Registers Involved in TV Out Process

Register Name	Description
Start VBLANK/VSYNC* and End VBLANK/VSYNC*	These VGA registers work in combination with each other to control the scan line at which the vertical blanking period begins and the point at which it ends.
VACTIVE	Dictates the specific number of active lines for the present digital frame.
VTOTAL	Specifies the number of scan lines from one VSYNC* active to the next VSYNC* active pulse. The difference between Vtotal and Vactive is the amount of blanked lines.
HBLANK/HSYNC* Start and HBLANK/HSYNC* End	This VGA register set works in combination with each other to control the value of the pixel or character clock counter where the HSYNC* signal becomes active and the position at which HSYNC* becomes inactive.
HACTIVE	Dictates the specific number of active pixels per line.
HTOTAL	Specifies the number of pixel clocks or character clocks from one HSYNC* active to the next HSYNC* active pulse. In other words, this is the total time required for both the displayed and nondisplayed portions of a single scan line. The difference between Htotal and Hactive is the amount of blanked pixels per line.

To achieve VGA compatibility, the controller must manipulate some of its own VGA register settings in order to produce a hi-quality dual display on both the computer monitor and TV. It should be noted that the encoder has no way of knowing that a different VGA mode has been selected. As a result, it relies on the I^2C®-compatible master device to reconfigure it via an autoconfiguration mode or complete register rewrite to make adjustments in its timing.

When the two devices are programmed correctly, regardless of the interface, the required input HSYNC*/VSYNC* to first input active pixel or line spacing “matches” the output HSYNC*/VSYNC* to first output active pixel or line spacing. When this occurs, the graphics controller always transmits active data at the time the CX25870/871 expects to receive it. Superior TV Out quality is achieved only when this type of timing symmetry exists.

1.3.21 Output Modes

The encoder can generate output video as Composite/Y-C(S-Video), YUV component, VGA-style RGB, SCART, Component (YP_RP_B) for HDTV, or RGB for HDTV. These outputs are selected by the OUT_MODE[1:0] register bits in combination with the HDTV_EN and EN_SCART bits.

While the encoder is in VGA style RGB, no color space conversion is possible from input to output. Analog RGB is transmitted from a digital RGB input and analog YCrCb is output from a digital YCrCb input.

When outputting RGB with HDTV_EN = 0, the device outputs VGA/SVGA analog RGB with a bilevel sync. In this mode, the R, G, and B input data is fed to the DACs after the addition of the horizontal sync and, if the SETUP bit is one, the setup pedestal is added. The output currents are scaled so that the DACs output the proper 1 V full-scale (sync tip to peak white) levels for driving a CRT monitor. The graphics controller must provide all the timing control (HSYNC and VSYNC signals) for the monitor, which results in the encoder operating as a slave in this case. Only the P[23:0], BLANK*, HSYNC*, and VSYNC* input pins and the RGB analog output pins are active. The BLANK*, HSYNC*, and VSYNC* pins are automatically enabled as inputs in this mode.

Each of the four video signals generated by the OUT_MODE[1:0] field can be multiplexed to any DAC using the OUT_MUXA[1:0], OUT_MUXB[1:0], OUT_MUXC[1:0], and OUT_MUXD[1:0] register bits. To do this, program the 2-bit value representing the desired type of output into the appropriate OUT_MUXx[1:0] register. As an example, suppose a system requires composite video (i.e., 00) to be output from DAC_A, chroma (10) on DAC_B, luma (01) on DAC_C, and composite video (00) on DAC_D. This scheme could be accomplished by programming register 0xC6 with 0001 1000 binary or 18 hex.

The LUMADLY[1:0] register bits control the amount of delay for the Y_DLY analog output. The allowable delay ranges from 0 (no delay) to 3 pixel clocks.

All digital-to-analog converters are designed to drive standard video levels into a combined RLOAD of 37.5 Ω (doubly-terminated 75 Ω loads). Unused outputs should be disabled by setting the corresponding DACDISx bit to minimize the supply current or left as a no connect. Disabling unused DAC outputs reduces cross chroma distortion and improves picture quality.

1.3.22 Analog Horizontal Sync

The HSYNC_WIDTH[7:0] register determines the duration of the horizontal sync pulse. The beginning of the horizontal sync pulse corresponds to the reset of the internal horizontal pixel counter. The horizontal line rate is determined by H_CLKO[11:0]. The internal horizontal counter is reset to 1 at the beginning of the horizontal sync and counts up to H_CLKO.

The sync rise and fall times are automatically controlled. The sync amplitude is programmable over a range of values by SYNC_AMP[7:0]. Incrementing the sync amp by 1 increases the sync amplitude of the analog sync pulse by 30 millivolts.

1.3.23 Analog Vertical Sync

The analog vertical sync duration is selectable as either 2.5 or 3 lines by register bit VSYNC_DUR. If VSYNC_DUR = 1, 3 lines are selected; if VSYNC_DUR = 0, 2.5 lines are selected.

The device automatically blanks the video from the start of the horizontal sync interval through the end of the burst, as well as the vertical sync to prevent erroneous video timing generation.

1.3.24 Analog Video Blanking

Analog video blanking is controlled by the H_BLANKO, V_BLANKO, and V_ACTIVEO registers. Together they define an active region where pixels are displayed. V_BLANKO defines the number of lines from the leading edge of the analog vertical sync to the first active output line per field. V_ACTIVEO defines the number of active output lines. H_BLANKO defines the number of output pixels from the leading edge of horizontal sync to the first active output pixel. H_ACTIVE defines the number of active output pixels.

The device automatically blanks video from the start of the horizontal sync interval through the end of the burst, as well as the vertical sync interval to prevent erroneous video timing generation.

1.3.25 Video Output Standards Supported

There are several bits (625LINE, SETUP, VSYNC_DUR, PAL_MD, FM, DIS_SCRST), a PAL pin, and various autoconfiguration modes, that control the generation of various video standards. (These are summarized in Table 1-18.) They allow the generation of all the different NTSC, PAL, and SECAM video standards. The aforementioned bits control the specific encoding process parameters. It is likely other registers may need to be modified to meet all the video parameters of the particular video standard. Video timing diagrams are illustrated in Figures 1-11 through 1-22. These show typical events that occur for each type of video format.

Table 1-18. Important Bit Settings for Various Video Outputs

Video Output Bit	NTSC-M	NTSC-Japan	PAL-BDGHI	PAL-N	PAL-Nc	PAL-M	PAL-60	SECAM-B, G, H(3)	SECAM-D, K, K1(2)	SECAM-L(1)
VSYNC_DUR	1	1	0	1	0	1	1	0	0	0
625LINE	0	0	1	1	1	0	0	1	1	1
SETUP	1	0	0	1	0	1	0	0	0	0
PAL_MD	0	0	1	1	1	1	1	0	0	0
DIS_SCRST	0	0	0	0	0	0	0	1	1	1
FM	0	0	0	0	0	0	0	1	1	1

NOTE(S):
(1) SECAM-L used primarily in France.
(2) SECAM-D, K, K1 used primarily in Russia and Eastern European nations.
(3) SECAM-B, G, M used primarily in the Middle East.
(4) Other CX25870 registers and bits must be reprogrammed to generate different video outputs. The bits in Table 1-18 are the most important settings.

Figure 1-11. Interlaced 525-Line (NTSC) Video Timing

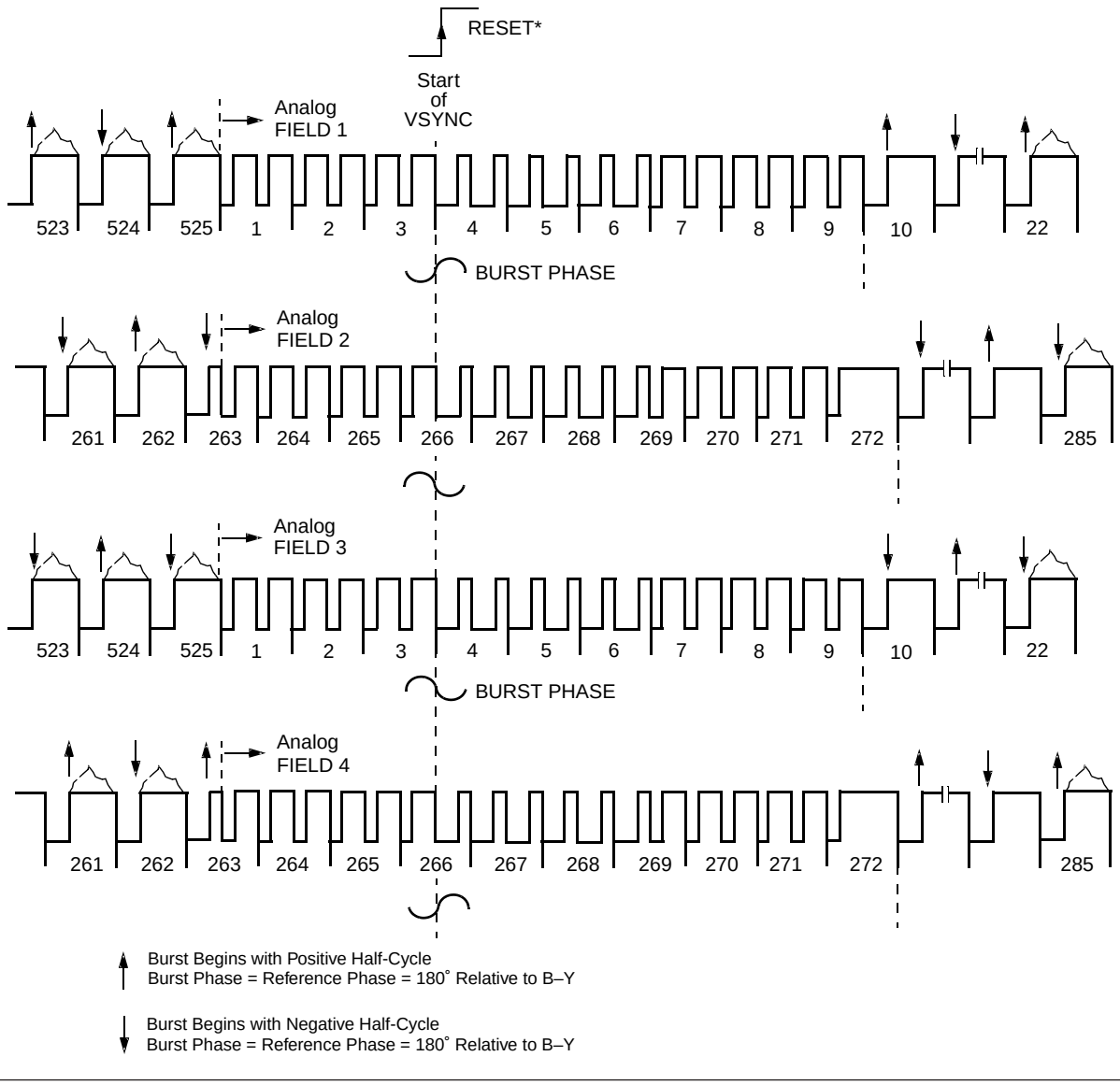

Note(s):
SMPTE line numbering convention is used rather than CCIR624.

100381_006

Figure 1-12. Interlaced 525-Line (PAL-M) Video Timing

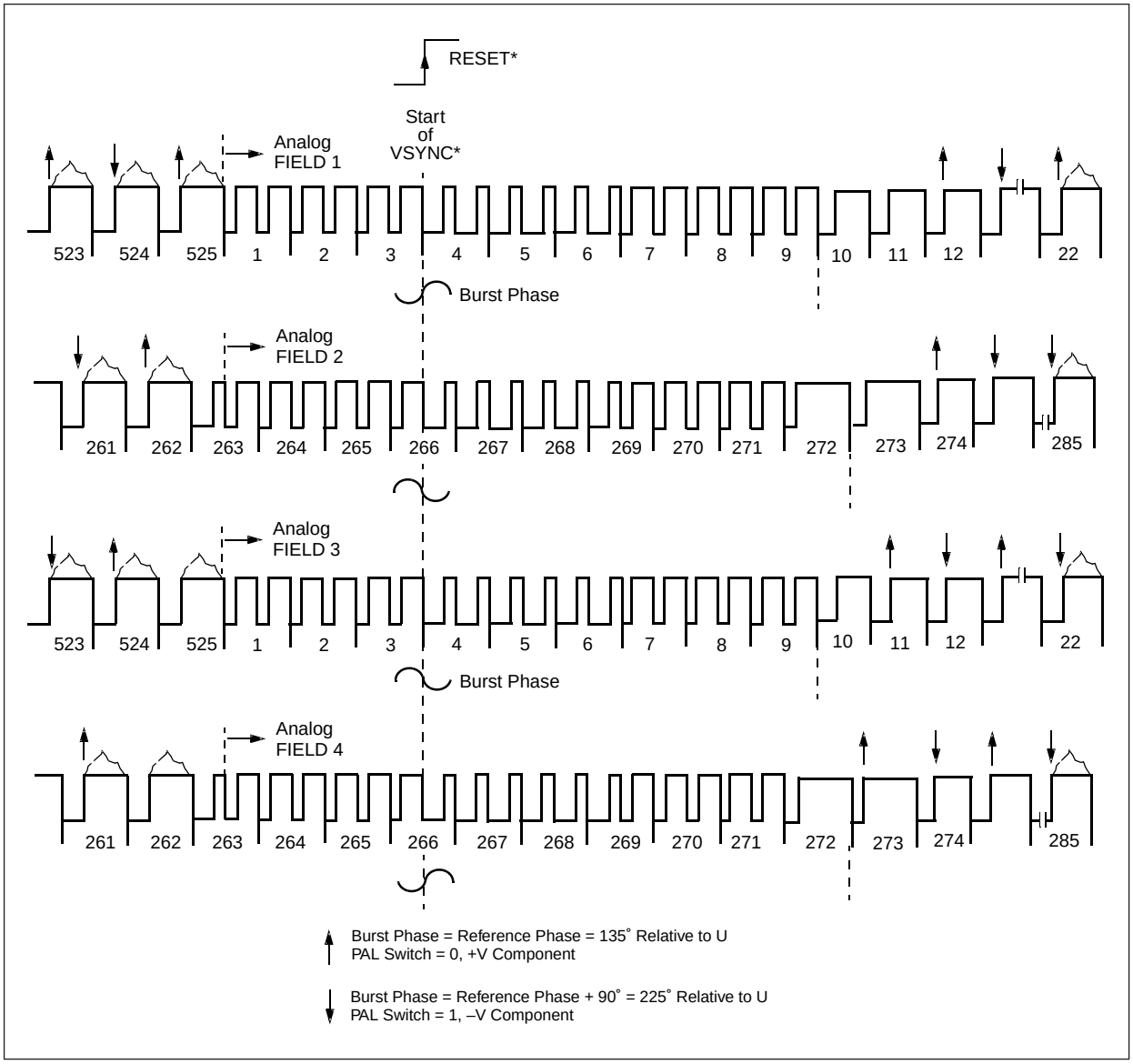

100381_007

Figure 1-13. Interlaced 625-Line (PAL-B, D, G, H, I, Nc) Video Timing (Fields 1–4)

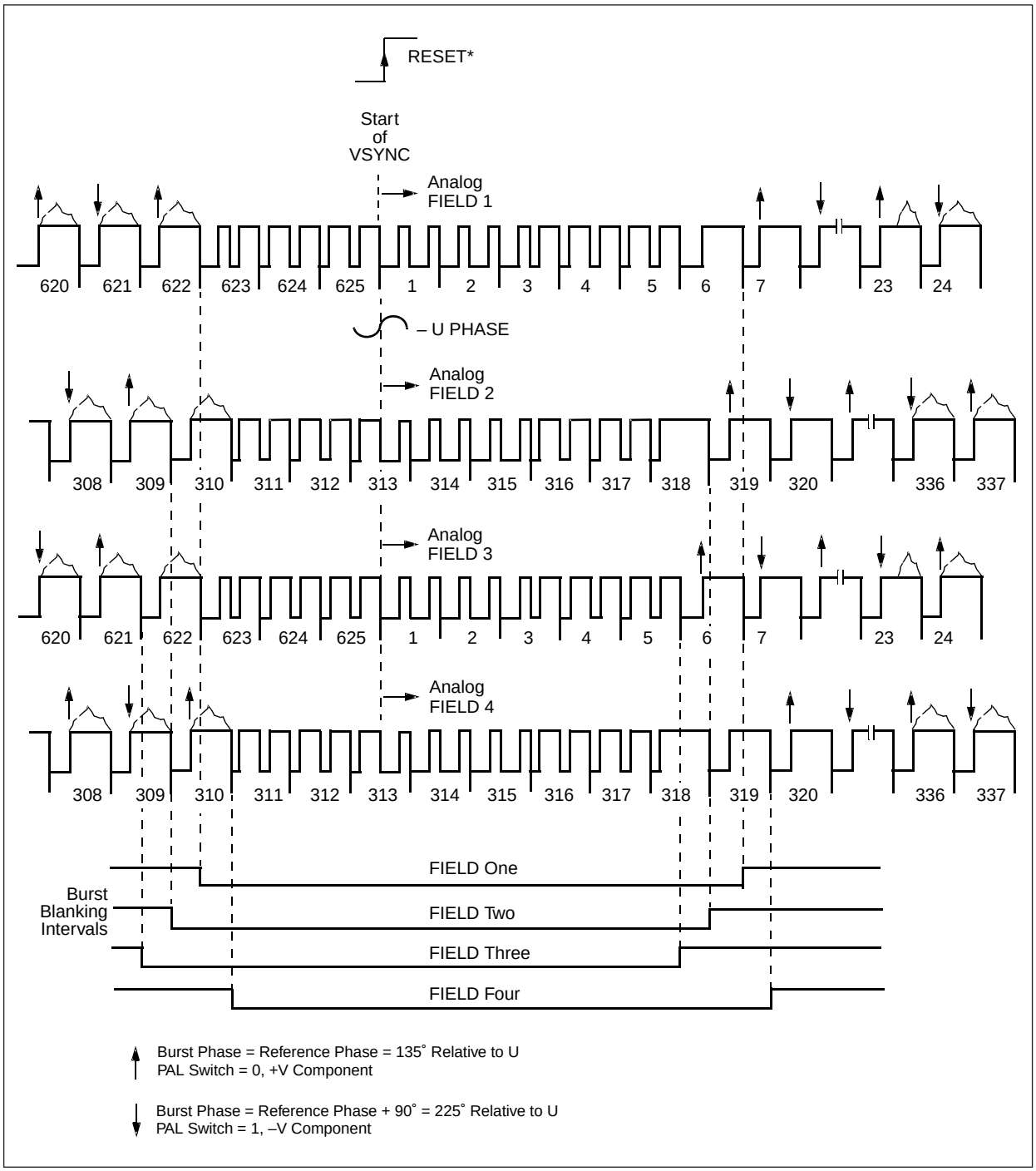

100381_008

Figure 1-14. Interlaced 625-Line (PAL-B, D, G, H, I, Nc) Video Timing (Fields 5–8)

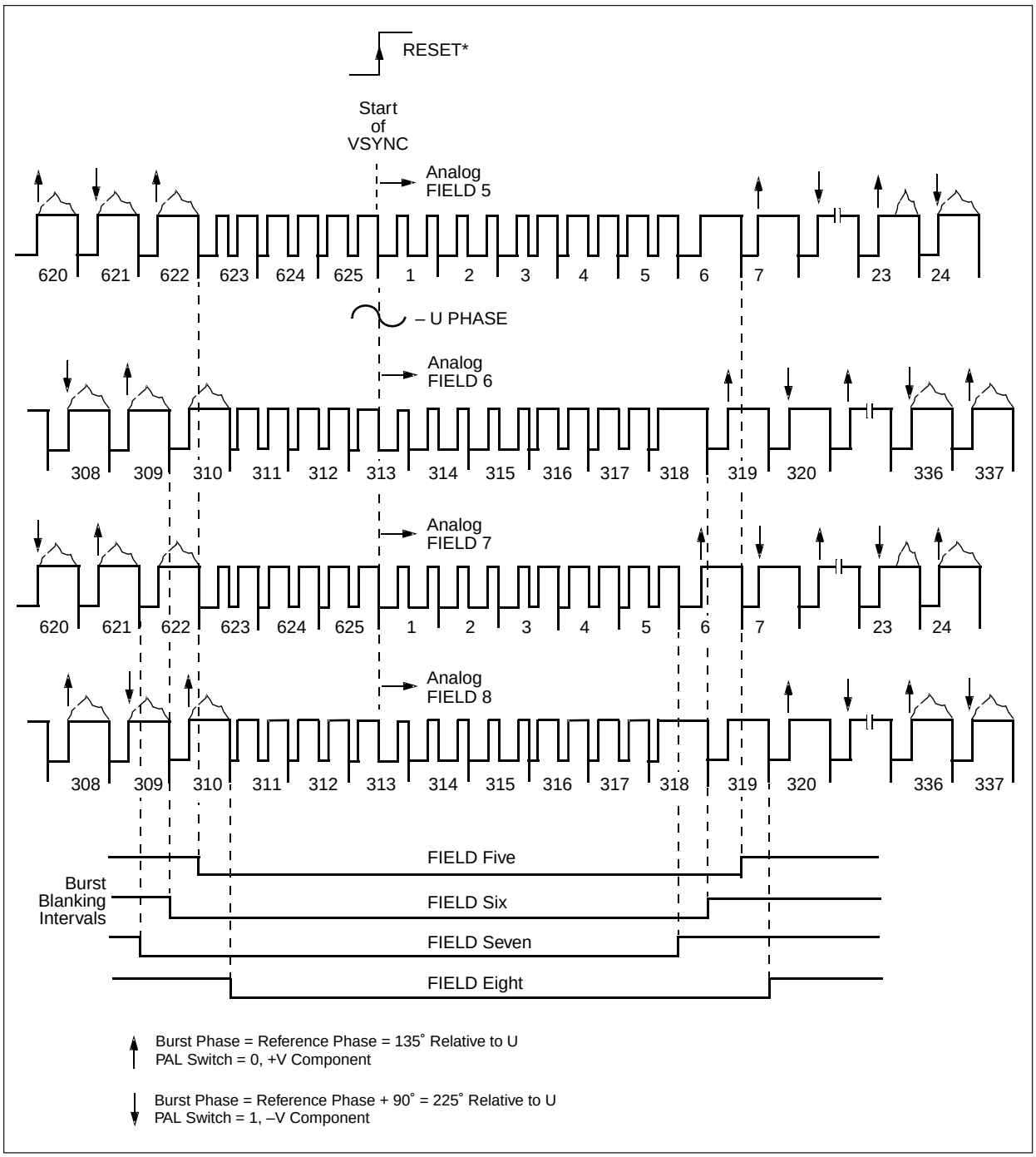

100381_009

Figure 1-15. Interlaced 625-Line (PAL-N) Video Timing (Fields 1–4)

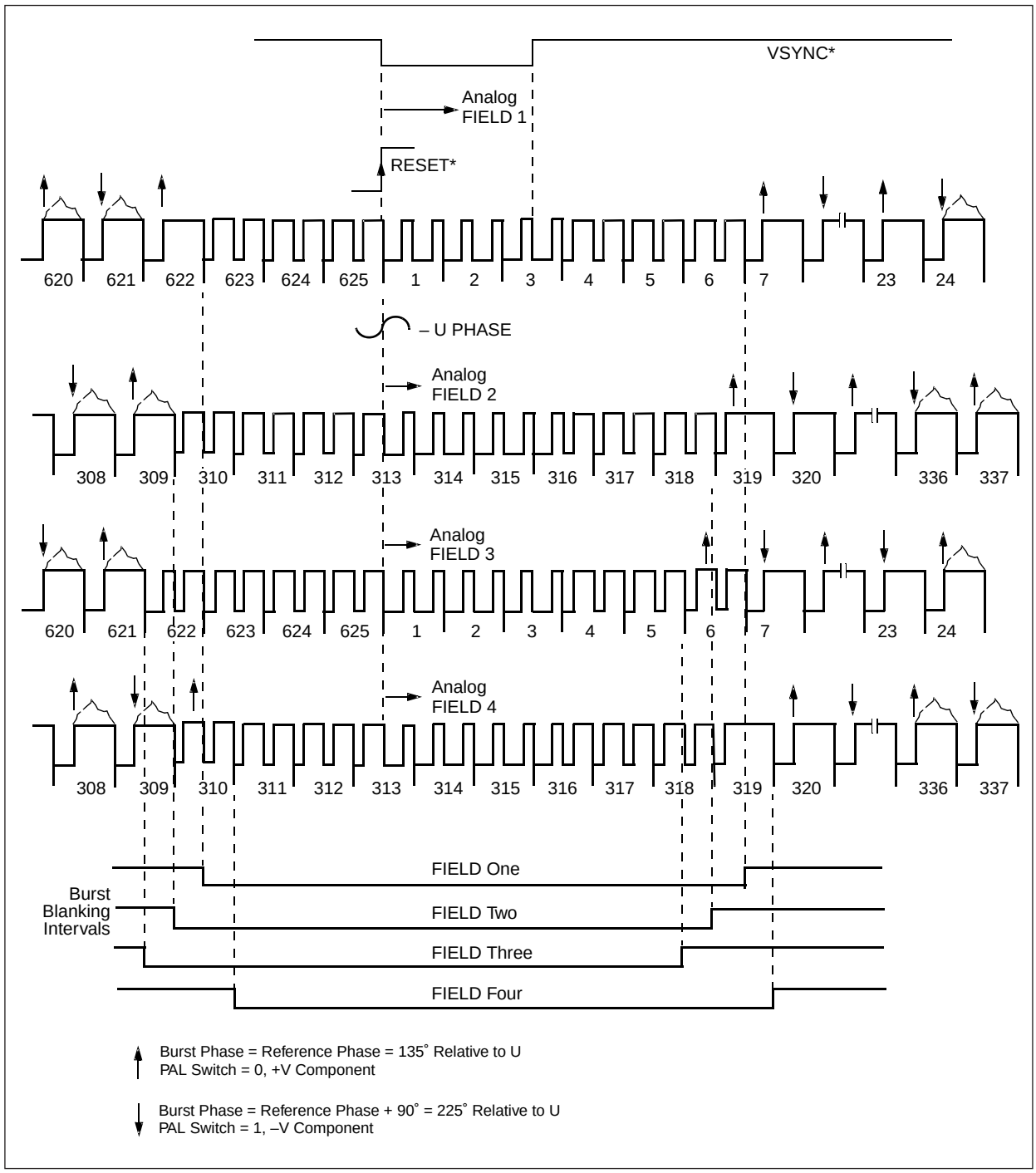

1000381_010

Figure 1-16. Interlaced 625-Line (PAL-N) Video Timing (Fields 5–8)

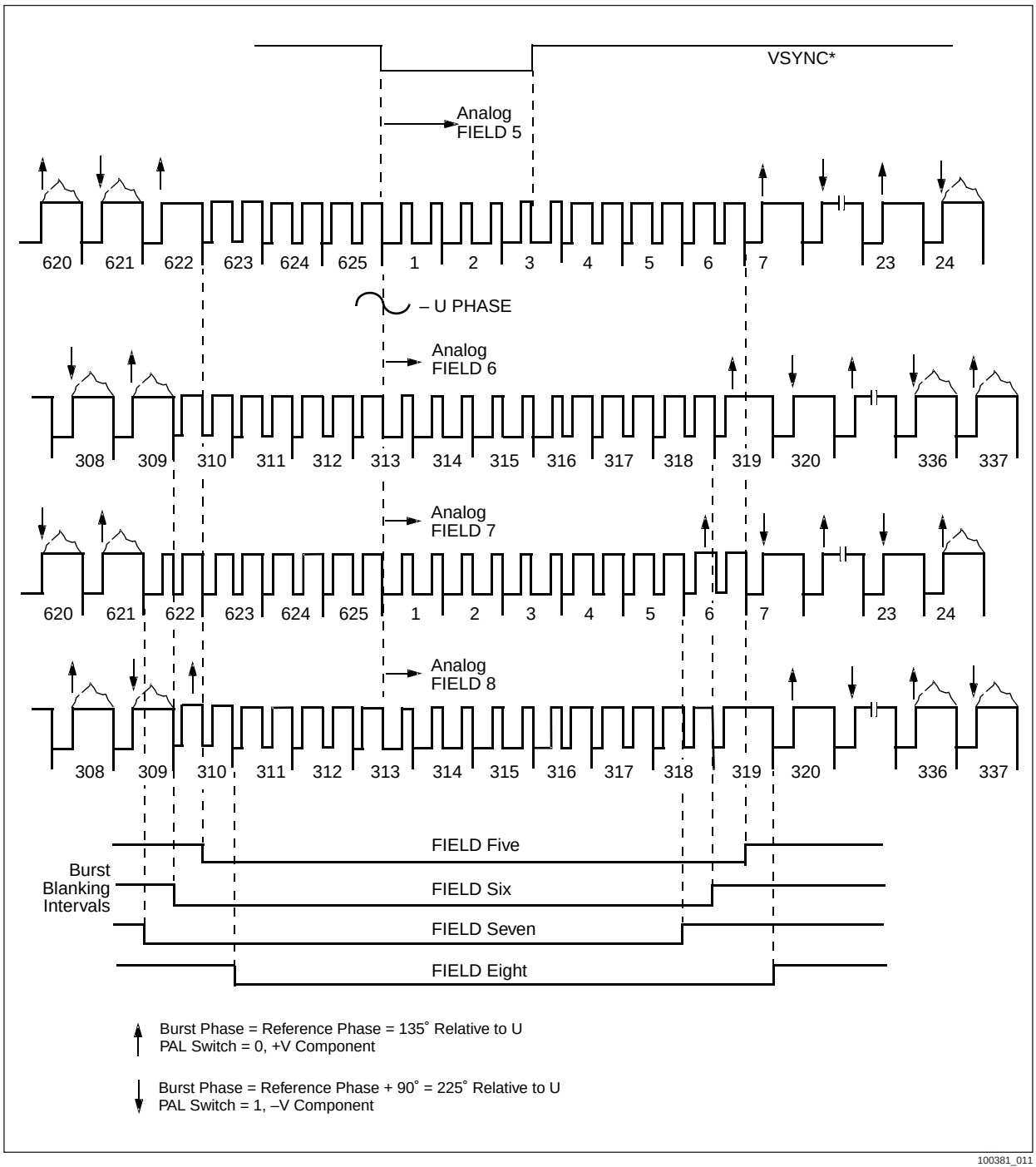

100381_011

Figure 1-17. Noninterlaced 262-Line (NTSC) Video Timing

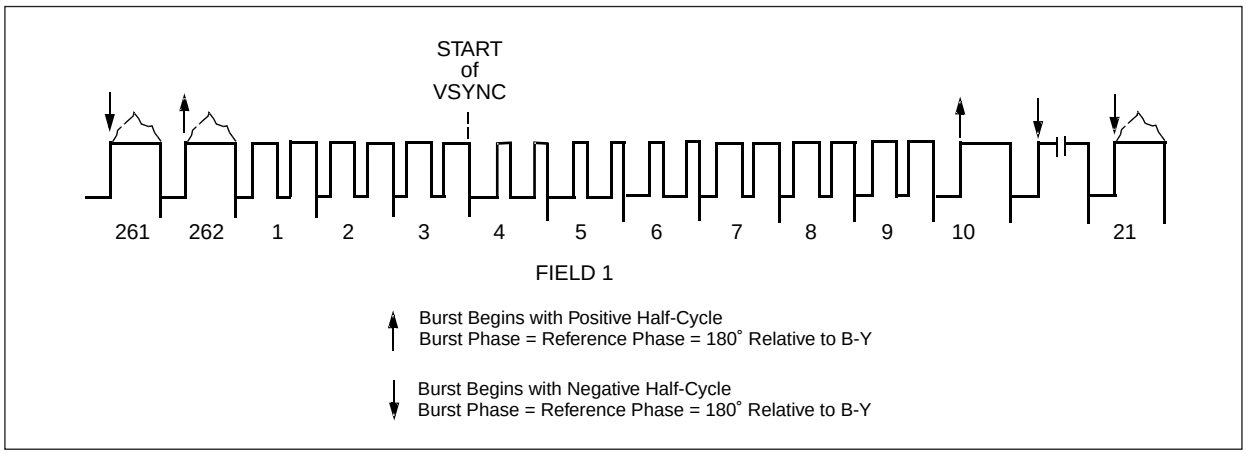

100381_012

Figure 1-18. Noninterlaced 262-Line (PAL-M) Video Timing

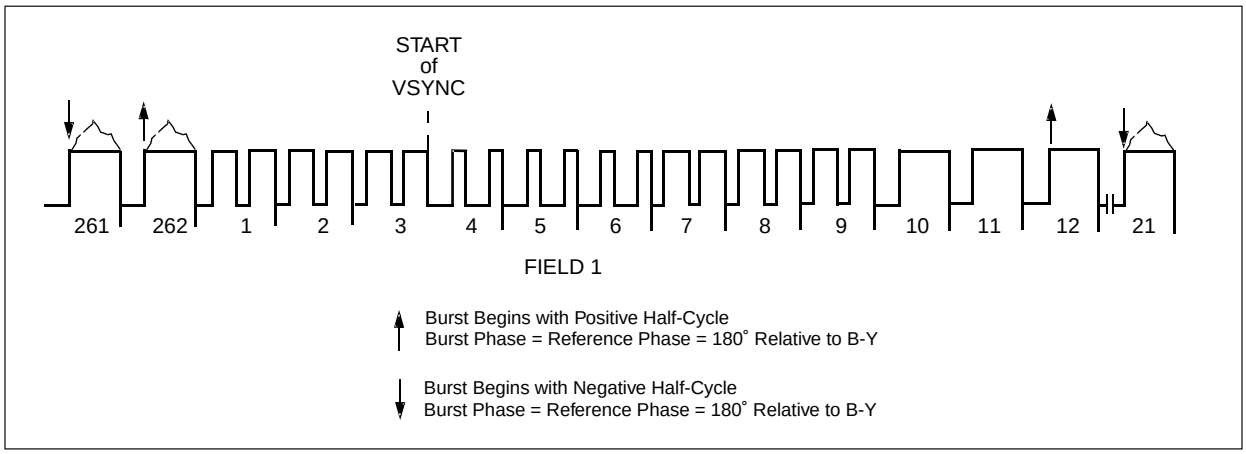

100381_013

Figure 1-19. Noninterlaced 312-Line (PAL-B, D, G, H, I, N, Nc) Video Timing

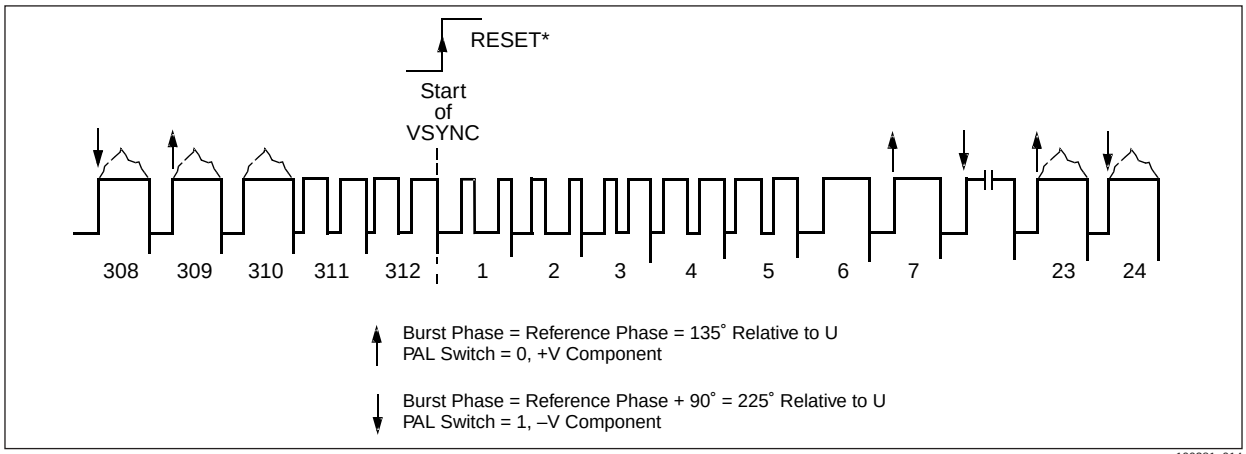

100381_014

Figure 1-20. Interlaced 625-Line (SECAM-B, D, G, K, K1, L, M) Video Timing (Fields 1-4)

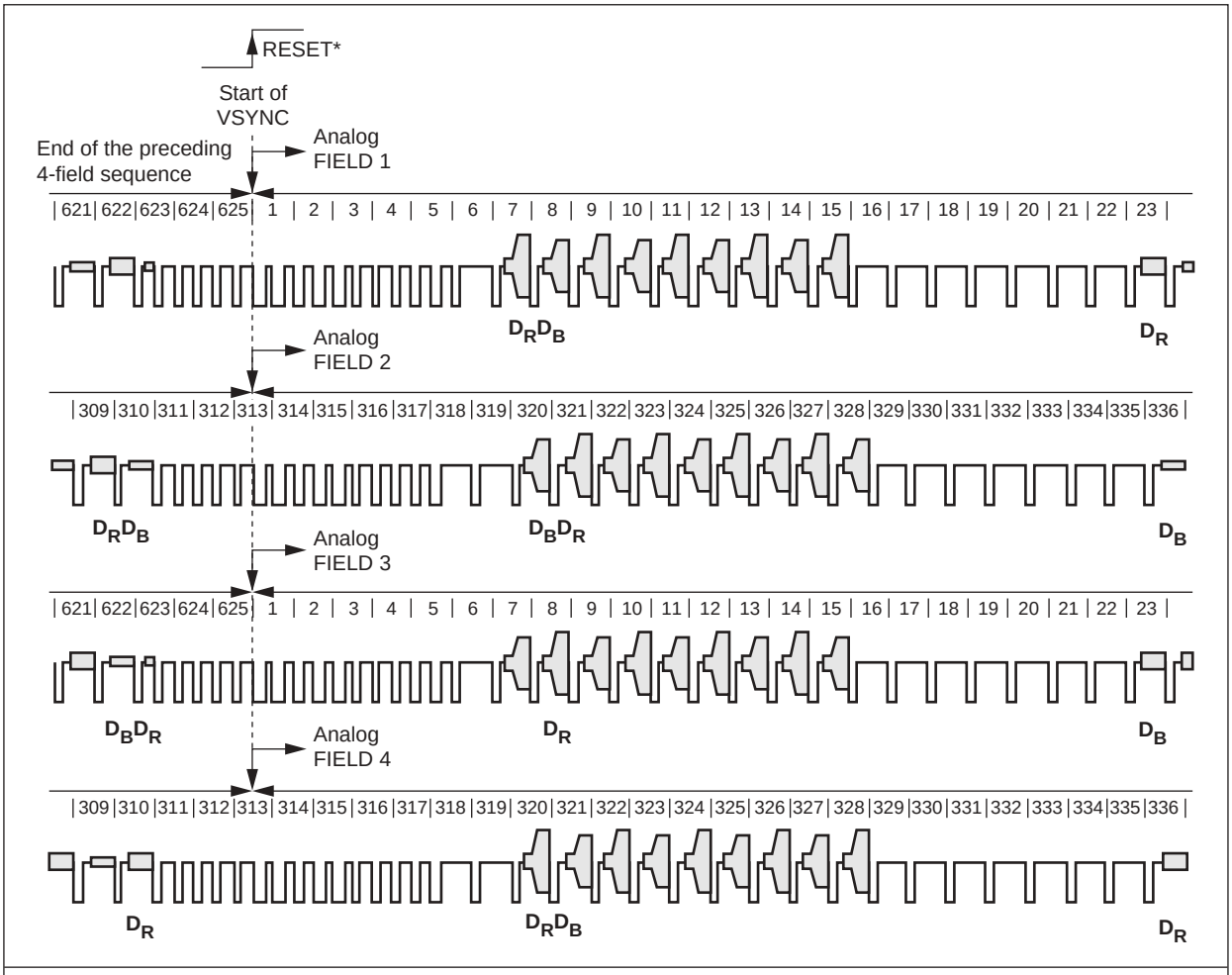

NOTE(S):

1. D_R and D_B color subcarrier signal sequences over four consecutive fields shown above.
2. D_R color subcarrier frequency is 4.406250 MHz.
3. D_B color subcarrier frequency is 4.250000 MHz.

100381_091

1.3.26 Subcarrier Generation

The device uses a 32-bit-word to synthesize the subcarrier. The value of the subcarrier increment required to generate the desired subcarrier frequency is found with the following equations:

NTSC:

$MSC[31:0] = int((455/(2*H_CLKO)) *2^{32} + 0.5)$

PAL:

$MSC[31:0] = int((1135+1/625)/H_CLKO)*2^{32} + 0.5$

SECAM:

$MSC_DB[31:0] = int((272/(2*H_CLKO)*2^{32} + 0.5)$
$MSC_DR[31:0] = int((272/(2*H_CLKO)*2^{32} + 0.5)$

where:H_CLKO is the number of output clocks/line (this is register 0x76 and the low nibble of 0x86).

This allows the generation of any desired subcarrier for any desired video standard. The 32-bit subcarrier increment must be loaded by the serial interface before the subcarrier is enabled. The device is reset to disable chroma until the last byte of the 32-bit increment loads, at which time the chroma is enabled, unless the DCHROMA bit is set.

In order to prevent any residual errors from accumulating, the subcarrier DTO (Discrete Time Oscillator) is reset every four fields for NTSC formats and every eight fields for PAL formats. For best quality in SECAM, the DIS_SCRST bit should be set preventing a subcarrier phase reset at the beginning of each color field sequence. Furthermore, the SECAM subcarrier is generated on lines 23-310 and 336-623 automatically unless disabled by the PROG_SC bit.

1.3.27 Subcarrier Phase Reset/Offset

In order to maintain correct SC-H phasing, the subcarrier phase is set to 0 degrees on the leading edge of the analog vertical sync every four (NTSC) or eight (PAL) fields, unless the DIS_SCRST (bit four of register 0xA2) is set to a logical 1. This is true for both interlaced and noninterlaced outputs. The subcarrier phase can be adjusted from the nominal 0 degrees phase by the PHASE_OFF[7:0] register, where each LSB change corresponds to a 360/256 = 1.406 degrees change in the phase.

Setting DIS_SCRST to 1 may be useful in situations where the ratio of CLK/2 to HSYNC* edges in a color frame is noninteger, which could produce a significant phase impulse by resetting to 0.

1.3.28 Burst Generation

The subcarrier burst generation is a function of the video standard (e.g., NTSC, PAL, or SECAM), the subcarrier frequency increment (MSC[31:0]), and the burst horizontal begin and end register settings (HBURST_BEGIN[7:0] and HBURST_END[7:0]). To calculate the value of HBURST_END[7:0] subtract 128 from the desired location in clock cycles. The burst will automatically be blanked during the horizontal sync preventing invalid sync pulses from being generated. Burst blanking is automatically controlled by the selected video format. Burst rise and fall times are automatically generated by the device. The burst amplitude is programmed by the BST_AMP[5:0] field.

1.3.29 Video Amplitude Scaling and SINX/X Compensation

Both the luminance and chrominance video amplitudes can be scaled by the MCR, MCB, and MY registers. This allows various colormetry standards to be achieved, and can also be used to boost the chroma to compensate for the sin x/x loss of the DACs. Appendix A show the range of values achievable and values for various video formats.

The DAC output response is a typical sinx/x response. For the composite video output, this results in a slightly lower than desired burst and chroma amplitude value. This is compensated for, to some extent, by choosing an output filter that boosts the frequency response slightly. Another method which can be used effectively, and is used by default in the auto configuration modes, is to boost the burst and chroma gain as programmed by the BST_AMP and MCR/MCB register values by a factor of(x/sinx). The amount of sinx/x amplitude reduction is calculated by:

$sinx/x = sin (\pi * Fsc/Fclk) / (\pi * Fsc/Fclk)$
Fsc = desired subcarrier burst frequency
Fclk = present input clock frequency

1.3.30 Chrominance Disable

The chrominance subcarrier can be turned off by setting the DCHROMA bit to a logical 1. This disables the subcarrier burst as well, providing luminance-only signals on the CVBS output and a static blank level on the chrominance output.

1.3.31 FIELD Pin Output

Like its predecessor, the Bt868/869, the CX25870/871 includes a FIELD pin output. This signal is output only and is accessed through pin #37. The frequency of the FIELD pin is 30 Hz during an NTSC video output, and 25 Hz throughout a PAL or SECAM video output. The only programming step required to obtain the FIELD output is to serially write the EN_OUT bit to 1.

The purpose of this signal is to provide a digital TTL compatible output which tracks the analog interlaced field presently being transmitted by the CX25870/871 DACs. The peak-to-peak amplitude of this output will be from 0 V to the level present on the VDD_CO and VDDL pins. If these pins are tied to 3.3 V, then the FIELD high state is transmitted at a 3.3 V level. If these pins are tied to 1.8 V or lower voltage, then the FIELD high state is transmitted at a 1.8 V or lower level. The logical 0 level from FIELD will always be GND/VSS regardless of the logical 1 voltage.

The FIELD output transitions after the rising edge of CLKI, two clock cycles following the leading edge of the digital HSYNC* input or output. Figure 1-21 shows the relationship between the FIELD and Composite (CVBS) outputs and VSYNC* input for NTSC. Figure 1-22 illustrates this same relationship for PAL.

Figure 1-21. FIELD Pin Output Timing Diagram (NTSC-M, J, 4.43)

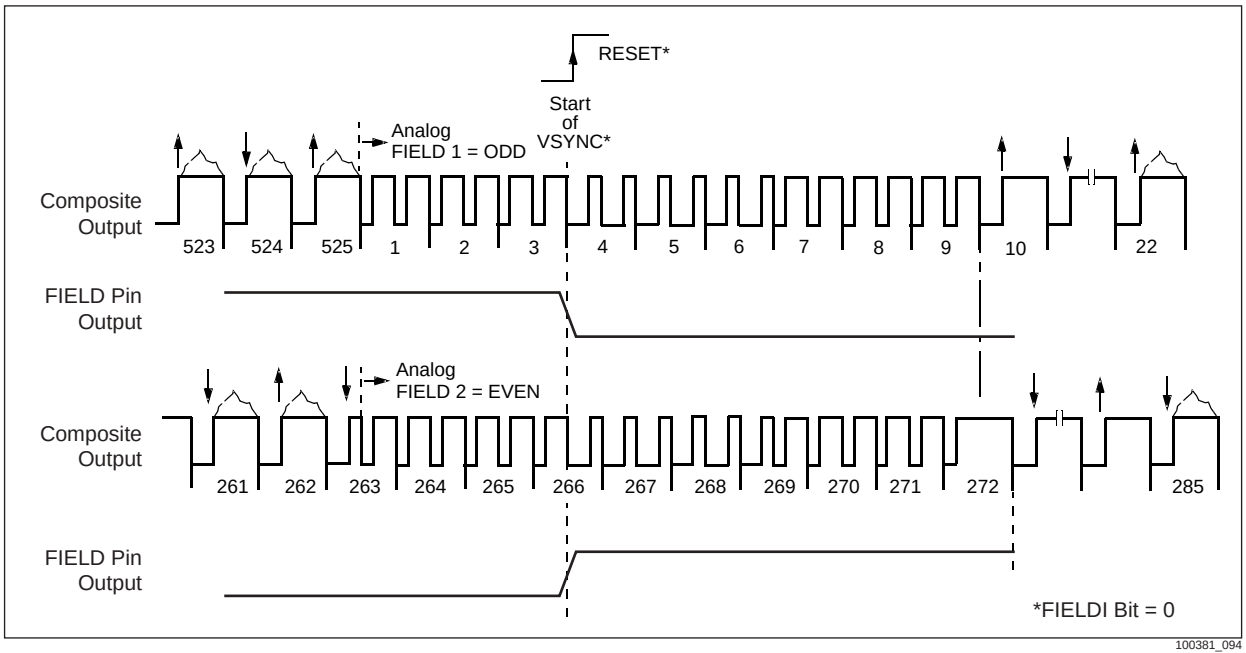

Figure 1-22. FIELD Pin Output Timing Diagram (PAL-B, D, G, H, I, N, Nc)

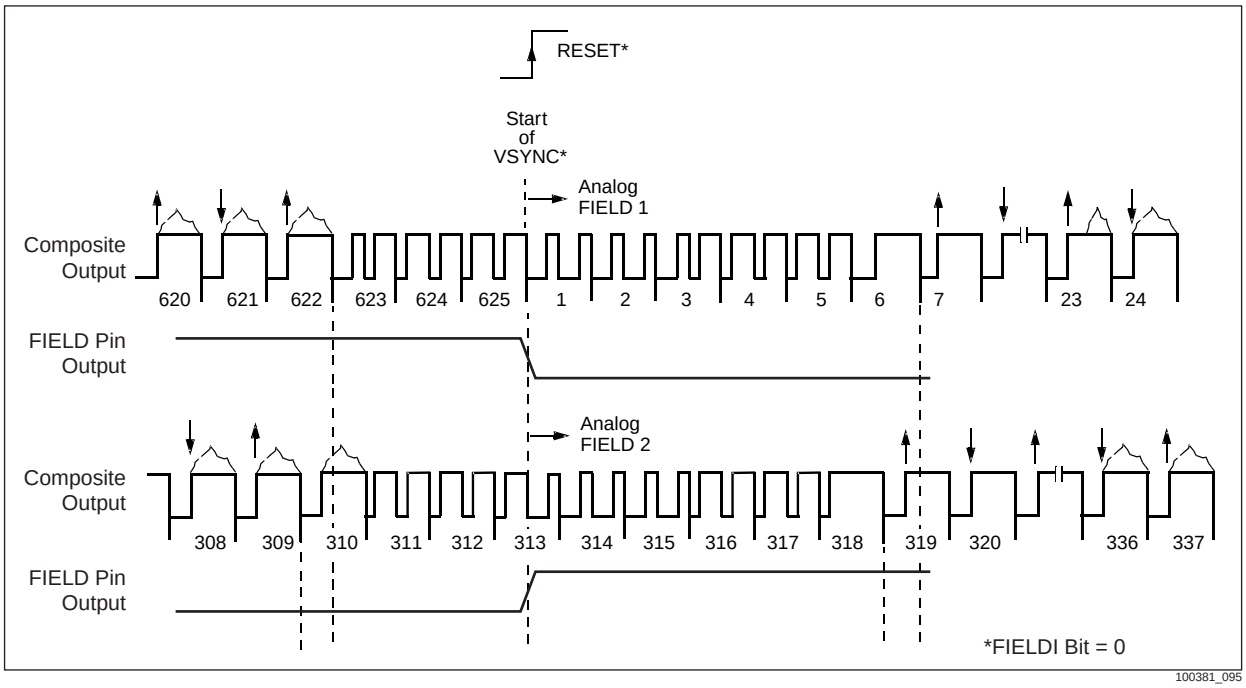

By default, the internal FIELDI bit will be 0 which forces the CX25870 to transmit a logical 1 during transmission of an EVEN field and logical 0 for the period of an ODD field. To change the FIELD polarity, reprogram the FIELDI bit.

If the CX25870/871 is the timing master and sends out HSYNC* and VSYNC*, then after a power-on, pin, or timing reset (setting of bit 7, register 0x6C), the encoder and the flicker filter portions of the device start at line 1, pixel 1 of their respective timing generation. For the CX25870/871, this means the ODD field is always the first field conveyed after a power-on reset, pin reset, or timing reset.

When the CX25870 receives an interlaced data format, its FIELD pin represents only the output field presently being generated by the on-chip DACs. When the CX25870 receives progressive (i.e., noninterlaced) frames which have no field associated with it, the CX25870's input timing generator still keeps track of frames received. As a result, after the entire second frame has been received, the input and encoder sections become resynchronized. This re-synchronization is done through an internal frame sync signal. This action, in turn, forces the CX25870 to the beginning of the odd field and changes the FIELD pin back to its odd state.

If the CX25870/871 is the timing slave (i.e., it accepts HSYNC* and VSYNC*) receiving a power-on reset, pin reset, or timing reset (register 0x6C, bit 7) causes the input timing generator to send the encoder the aforementioned frame sync. This sets the encoder to the beginning of the odd field which is denoted through the FIELD pin. The first digital HSYNC* and VSYNC* combination then corresponds to the encoder's EVEN output field. The second digital HSYNC* and VSYNC* combination will again cause a frame sync and the encoder will start sending the ODD field both from its DACs and FIELD pin. This ODD–EVEN–ODD–EVEN … field sequence continues indefinitely.

1.3.32 Buffered Crystal Clock Output

The buffered crystal clock output (XTL_BFO) pin provides a buffered output (0 V to 3.3 V peak-peak) of whatever frequency is found between the CX25870's XTALIN and XTALOUT pins. This signal can then be used as a much more accurate input clock to the graphics controller because controllers typically utilize clock sources with errors between 75–150 ppm. This implementation ultimately results in better VGA picture quality because the clock driving the data master is within the same tolerance (i.e., 25 ppm) as the TV Out encoder. This can also lead to a considerable savings in cost, component count, and PC board space because the crystal attached to the data master has been completely eliminated.

On power-up, the encoder will transmit a 0 to 3.3 V signal at a frequency equal to the frequency of the crystal found between the XTALIN and XTALOUT ports. The tolerance of the XTL_BFO signal will match the tolerance found within the encoder's crystal. The CX25870 was designed to expect a 13.500 MHz ± 25 ppm crystal. As a result, all the PLL_INT and PLL_FRACT register values found within each CX25870 autoconfiguration mode possess this set of default values.

The CX25870 does have the flexibility to support an alternate 14.31818 MHz crystal with a tolerance of ± 25 ppm. To switch the encoder to operate with this crystal frequency, install an appropriate crystal and crystal circuit between the XTALIN and XTALOUT ports and set the 14318_XTAL bit to 1. Enabling this bit translates the 13.500 MHz-dependent auto configuration registers to their new 14.31818 MHz settings.

For CX25870 designs, a small (e.g., 33 Ω) series resistor should be added to XTL_BFO, as close as possible to the signal source device. This reduces overshoot and undershoot on this signal as it changes states. The buffered crystal clock output pin should be floated if not used. Disabling the XTL_BFO pin is possible through the XTL_BFO_DIS bit.

1.3.33 Noninterlaced Output

When the CX25870/871 is programmed for noninterlaced video out via the NI_OUT bit, it always transmits the odd field. The FIELD pin will continue to change state on the leading edge of the analog vertical sync. A 30 Hz offset should be subtracted from the color subcarrier frequency while in NTSC mode so that the color subcarrier phase is inverted from field to field. The transition from interlaced to noninterlaced in master interface occurs during odd fields to prevent synchronization disturbance.

NOTE: Consumer VCRs can record noninterlaced video with minor noise artifacts, but special effects (e.g., scan >2x) may not function properly.

1.3.34 Closed Captioning (CC)

The CX25870/871 encodes NTSC/PAL–M closed captioning on scan line 21, and NTSC/PAL–M extended data services on scan line 284. Four 8-bit registers (CCF1B1, CCF1B2, CCF2B1, and CCF2B2) provide the data while bits ECCF1 and ECCF2 enable display of the data. A logical 0 corresponds to the blanking level of 0 IRE, while a logical 1 corresponds to 50 IRE above the blanking level.

Closed captioning for PAL–B, D, G, H, I, N, Nc is similar to that for NTSC. Closed-caption (CC) encoding is performed for 625-line systems according to the system proposed by the National Captioning Institute; clock and data timing is identical to that of NTSC system, except that encoding is provided on lines 22 and 335, for closed captioning and extended data services, respectively.

The CX25870/871 generates the clock run-in and appropriate timing automatically. Pixel inputs are ignored during CC encoding. See FCC Code of Federal Regulations (CFR) 47 Section 15.119 (10/91 edition or later) for programming information. The EIA608 standard describes ancillary data applications for Field 2 Line 21 (line 284).

When CCF1B2 is written, CCSTAT_O is set; when CCF2B2 is written, CCSTAT_E is set. After the CC bytes for the odd field are encoded, CCSTAT_O is cleared; after the CC bytes for the even field are encoded, CCSTAT_E is cleared. If the ECCGATE bit is set, no further encoding is performed until the appropriate registers are written again; a null is transmitted on the appropriate CC line in that case. If the ECCGATE bit is not set, the user must rewrite the CC registers prior to reaching the CC line; otherwise the last bytes are re-encoded. The CC data bytes are double-buffered to prevent loss of data during the encoding process.

Pseudo-code that can be used to create a software function for Closed Caption Encoding is included as Appendix D.

1.3.35 Wide Screen Signaling (WSS)

The CX25870/871 supports the WSS methods outlined in the EIAJ CPR-1204 and ITU-R BT.1119 standards. Three serial interface registers control WSS data insertion. For 525 line NTSC systems, two bits enable the insertion of the WSS bit data on lines 20 and 283. The EWSSF1 register bit controls line 20 and EWSSF2 controls line 283. Twenty bits are used to insert the 14 bits of payload, plus six bits of CRC data. CRC data is not computed and must be inserted by the user.

For 625 line PAL and SECAM systems, WSS data insertion is only specified for line 23. In this case, the EWSSF1 register enables WSS data insertion on line 23 and EWSSF2 is ignored. Only 14 bits of payload are specified for 625 line PAL and SECAM systems. No CRC is generated, therefore bits WSSDAT[20:15] are ignored in these systems.

WSSINC[19:0] specifies the incremental value of the PQ ratio counter to generate the desired WSS waveform. The increment value is found by:

525 line:

$WSSINC[19:0] = 2^{20} / (2.234*10^{-6}*F_{clk})$

625 line:

$WSSINC[19:0] = 2^{20} / (200*10^{-9}*F_{clk})$

where: F_{clk} = CLKI frequency = CLKO frequency.

Figure 1-23 illustrates a typical WSS signal, where WSSDAT[14:1] = 0x00.

NOTE: WSS uses biphase coding of its data bits. The amplitude of the WSS pulses is 500 mV above black when high and black when low. For further WSS details, see specification *ETS 300294* or *ITU-R BT.1119*.

Figure 1-23. Typical WSS Analog Waveform (NTSC)

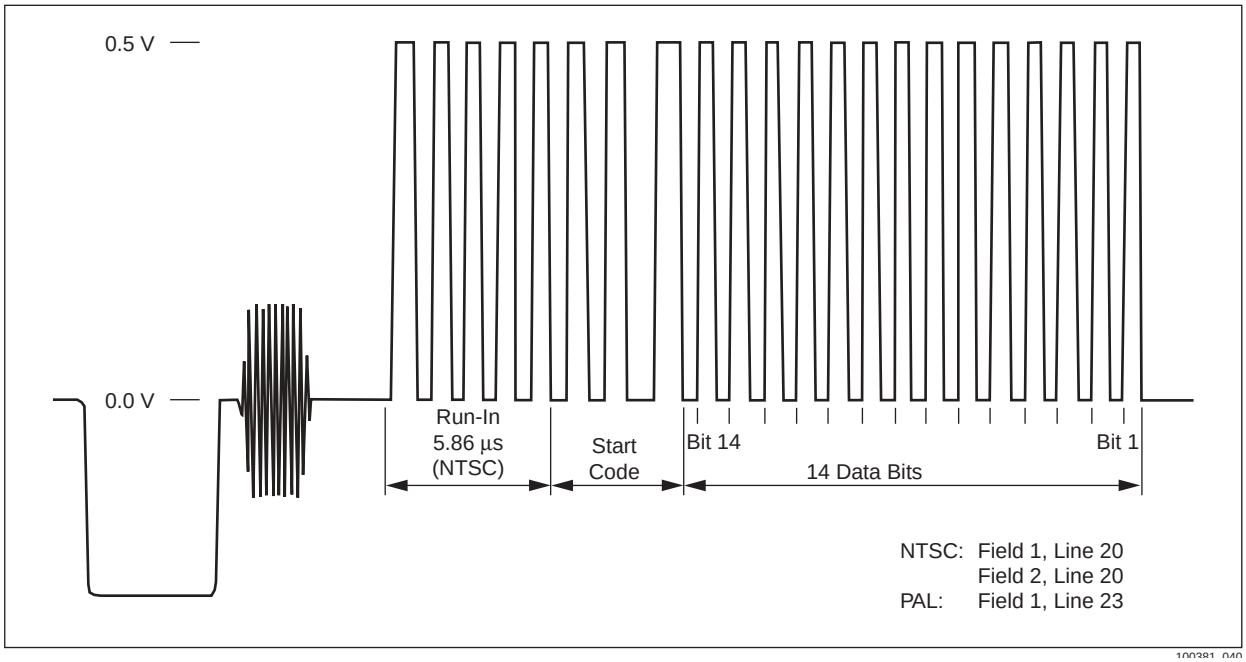

The CX25870 does not support the CGMS/A standard for analog PAL or analog NTSC video systems. CGMS stands for Copy Generation Management System whereby scan line 23 of PAL Field 1 or lines 20 and 283 of NTSC video outputs contains a data burst which details the signal format. The burst also specifies the aspect ratio, type of enhanced services, and subtitle location for the TV to use during the broadcasted show.

In addition to the details about the signal format, the CGMS bits can indicate whether a recording device can make no copies, one copy, or unlimited copies. If no copies are allowed, the recording device will not make a copy. If a single copy is allowed, the recording device will make one copy and change the CGMS data to indicate that no future copies can be made from the native content.

The major reasons the CX25870 does not support the analog method of CGMS/A are as follows:

- No movie studio even considers the notion of allowing the user to make a single copy. All DVDs released from the movie industry now enable the Macrovision copy protection system so it is impossible to make any copies of DVDs in the analog domain.
- There are no plans for DVD content providers to allow users to make limited copies of their intellectually copyrighted material.
- Some aspects of the CGMS/A system are not pirate-proof and can be disabled remotely.
- The CGMS/A standard appears to be a vendor rather than a DVD consortium mandate. Only a few DVD players have this feature now, and it is expected that they will abandon this as newer versions of the Macrovision standard are released or a tamper-proof version of CGMS exists.

1.3.36 Chrominance and Luminance Processing

Once the input data is converted to internal YUV format, the Y and UV components are filtered and upsampled to the system clock frequency.

The luminance signal is always low-pass filtered using the upsampling filter response illustrated in Figure 1-24. Additional peaking or reduction filters can be enabled (see Figures 1-25, 1-26, and 1-27), using the PKFIL_SEL[1:0] register field. The peaking filters are optimized for high bandwidth frequency response, and optimal picture quality.

The default chrominance filter response is illustrated in Figure 1-28, but an alternate wide bandwidth response can be selected using register bit CHROMA_BW, as illustrated in Figure 1-29.

Figure 1-30 illustrates the SECAM pre-emphasis filter response for the modulated chrominance signal.

Figure 1-24. Luminance Upsampling Filter

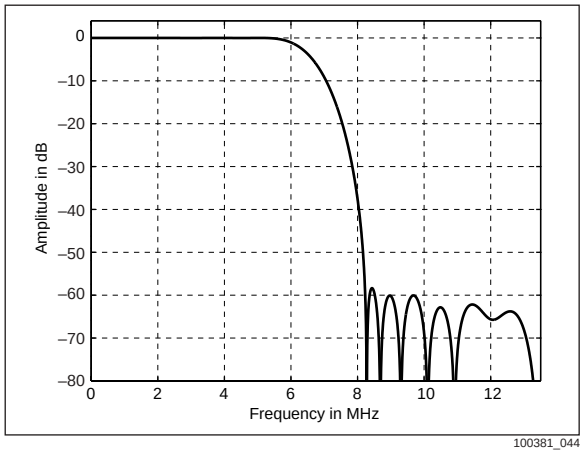

Figure 1-25. Text Sharpness (Luminance Upsampling) Filter with Peaking Options

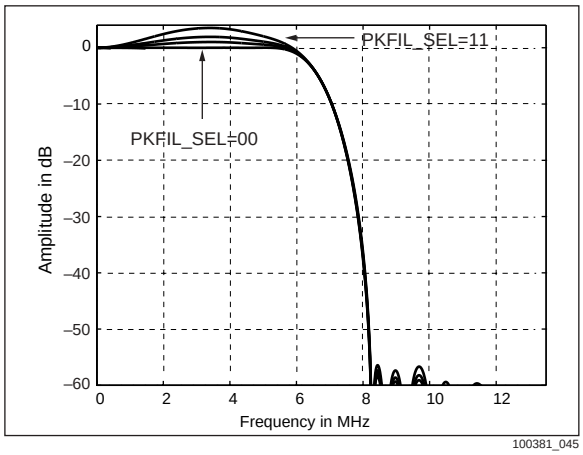

Figure 1-26. Close-Up of Text Sharpness (Luminance Upsampling)Filter with Peaking and Reduction Options

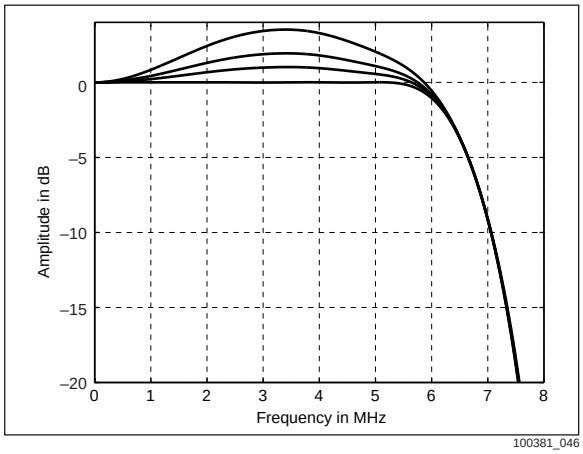

Figure 1-27. Zoom-In of Text Sharpness (Luminance Peaking) Filter Options

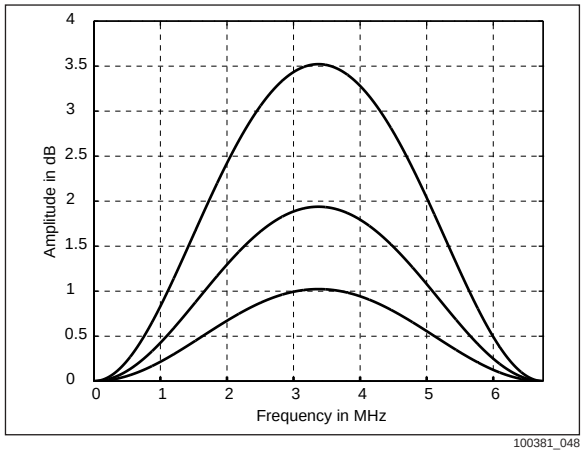

Figure 1-28. Chrominance Filter (CHROMA_BW = 0) - default

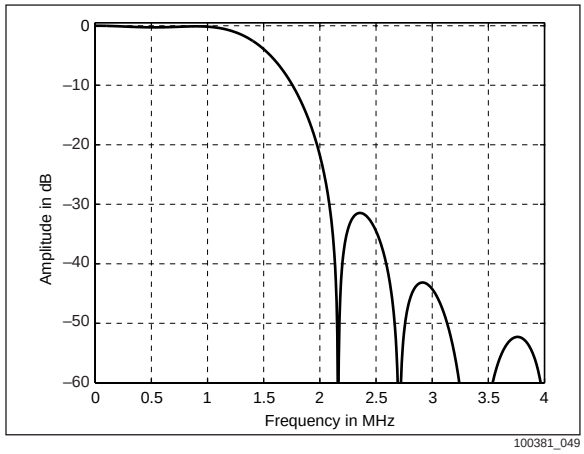

Figure 1-29. Chrominance Wide Bandwidth Filter (CHROMA_BW = 1)

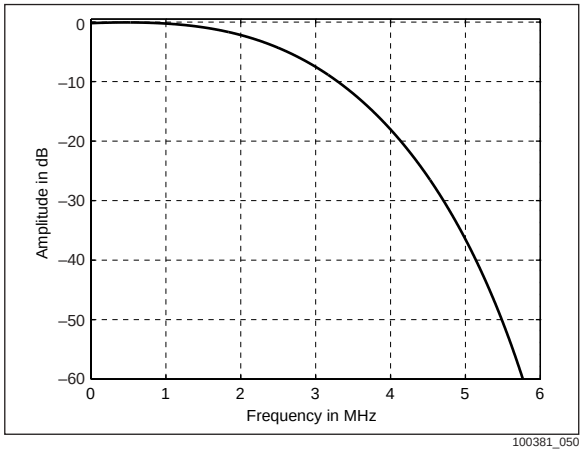

Figure 1-30. SECAM High Frequency Pre-emphasis Filter

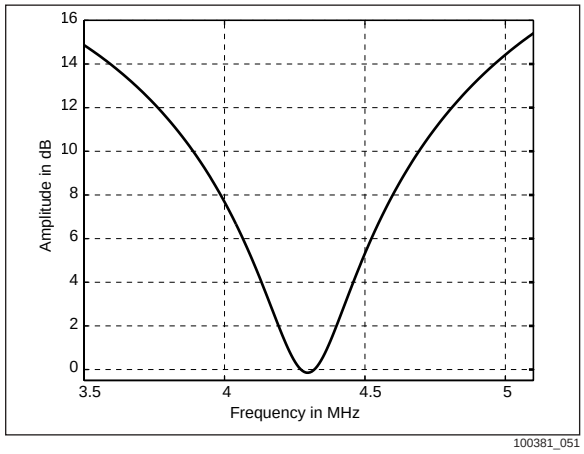

1.3.37 Color Bar and Blue Field Generation

The CX25870/871 has two internal color bar generators. Preflicker filter color bars are enabled by setting the FFCBAR bit to a logical 1. Postflicker filter color bars are enabled by setting the ECBAR bit to a logical 1.

NOTE: FFCBAR color bars are optimized for RGB input mode and ECBAR color bars are optimized for YCrCb input mode.

The device uses the H_BLANKO register value to determine the starting point of the color bars, and the H_ACTIVE register value to determine the width. Eight bars are displayed, with the colors and amplitudes being generated internally. The pixel inputs (P23–P0) are ignored in color bar mode. The CX25870/871 must be programmed with the appropriate MY, MCR, and MCB register values for the desired input format, RGB or YCrCb.

The CX25870/871 also produces a blue field by setting register bit EBLUE to 1. Pixel inputs are ignored while any of the color generation wave forms are being produced.

Figure 1-31 and Tables 1-19 and 1-20 illustrate the voltage amplitudes for the different color bar outputs.

Figure 1-31. Composite and S-Video Format (Internal Colorbars)

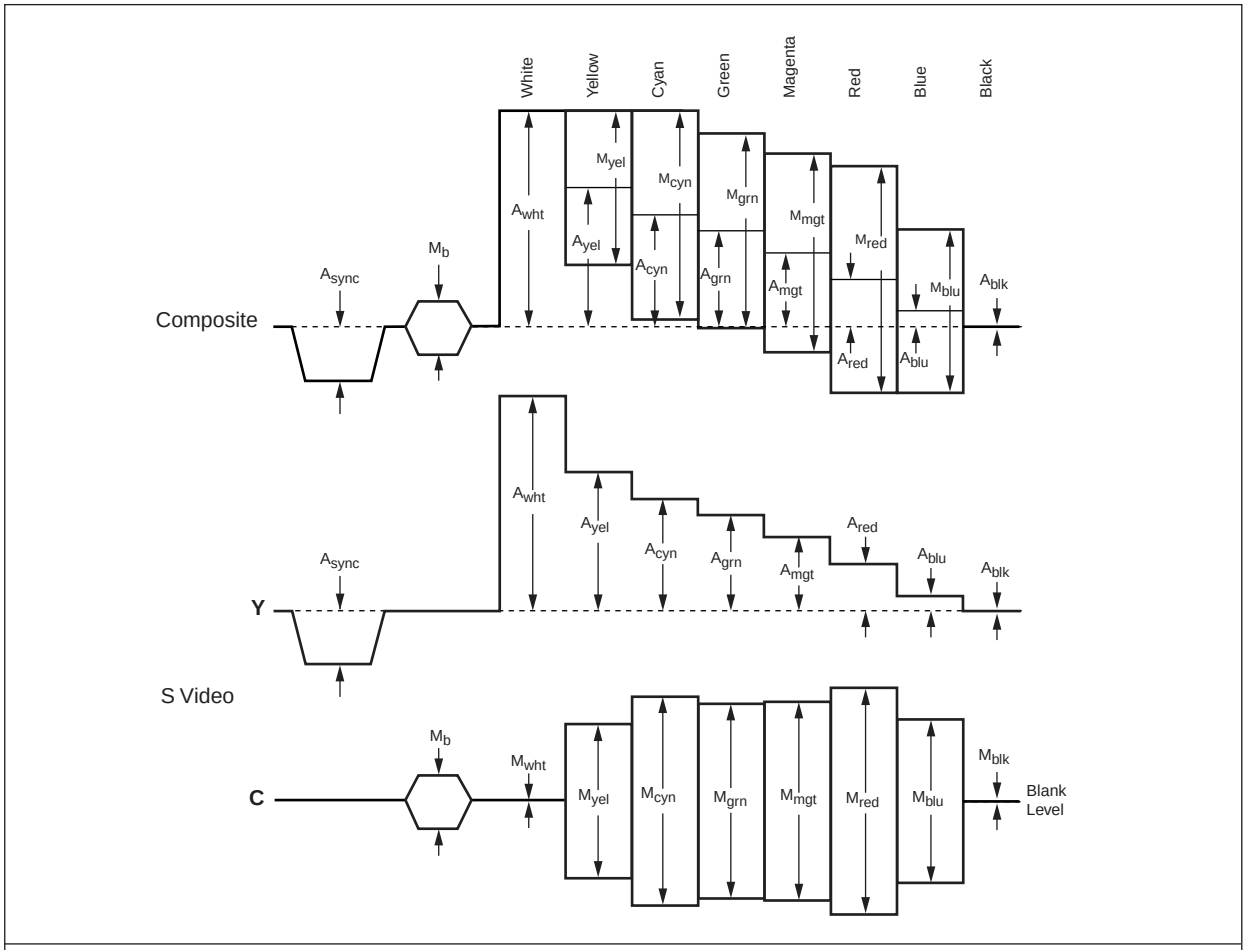

NOTE(S):
1. A_x is the DC (luminance) amplitude referenced to black, except for A_{blk} and A_{sync}, which are referenced to blank.
2. M_x numbers are the peak-to-peak amplitudes of the subcarrier waveform.

Table 1-19. Composite and Luminance Amplitude

Y and Composite Amplitudes	A_{sync}	A_{wht}	A_{yel}	A_{cyn}	A_{grn}	A_{mgt}	A_{red}	A_{blu}	A_{blk}
NTSC-M (volts)	–0.286	0.661	0.441	0.347	0.292	0.203	0.149	0.054	0.0536
NTSC-J (volts)	–0.286	0.714	0.477	0.375	0.316	0.220	0.161	0.059	0
PAL-B (volts)	–0.300	0.700	0.465	0.368	0.308	0.217	0.157	0.060	0

NOTE(S): A_x is the DC (luminance) amplitude referenced to black, except for A_{blk} and A_{sync}, which are referenced to blank.

Table 1-20. Composite and Chrominance Magnitude

C and Composite Magnitudes	M_b	M_{wht}	M_{yel}	M_{cyn}	M_{grn}	M_{mgt}	M_{red}	M_{blu}	M_{blk}
NTSC-M (volts)	0.286	0	0.444	0.630	0.589	0.589	0.629	0.444	0
NTSC-J (volts)	0.286	0	0.480	0.681	0.636	0.636	0.681	0.480	0
PAL-B (volts)	0.300	0	0.470	0.663	0.620	0.620	0.664	0.470	0
NOTE(S): M_x numbers are the peak-to-peak amplitudes of the subcarrier waveform.									

1.3.38 CCIR656 Mode Operation

Data transmitted from MPEG-2 video decoders or various Multimedia Processors is often done in a format called CCIR656. This format is similar to the CCIR601 in many ways but is unique in that the video sync information is embedded as codes in the data stream. As a result, no digital HSYNC or VSYNC signals are required as part of the physical interface between the timing master and slave devices. Applications for CCIR656 typically include consumer appliances such as Video CD players, DVD players, set-top boxes, and MPEG add-in cards where pin counts are limited.

The actual digital CCIR656 input data delivered to the CX25870/871 is interlaced 4:2:2 YCrCb over eight physical lines. In addition, there are two timing reference codes, one at the beginning of each video data block (Start of Active Video, SAV) and one at the end of each video data block (End of Active Video, EAV). These timing reference values are digital words consisting of a unique 4-word sequence that conveys when the active video starts and ends. The CCIR656 compliant master device embeds both SAV and EAV codes into the stream where appropriate.

While in CCIR656 Mode, the CX25870/871 acts as the Slave device (both clocking and timing). An illustration of this correct connection scheme is shown in Figure 1-32.

Figure 1-32. CX25870/871 Connection to CCIR656-Compatible Master Device

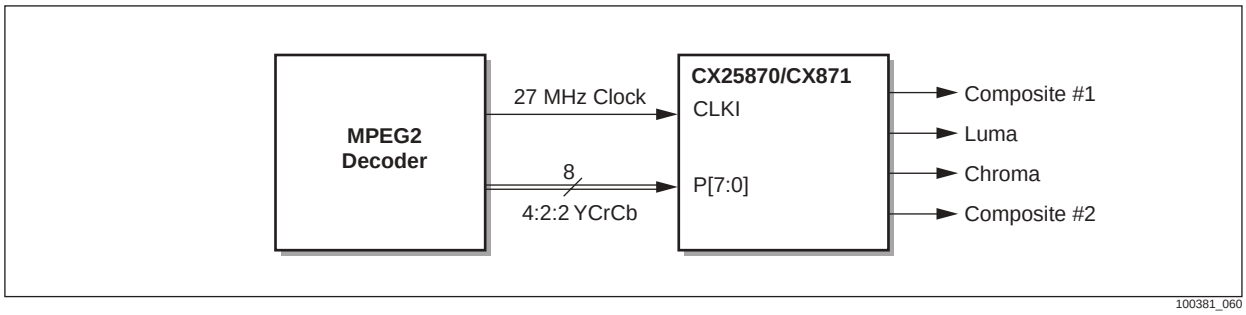

While in CCIR656 Mode, the encoder adheres to all input guidelines specified in the ITU-R BT.656-3 standard. This specification was developed for the transmission of color video signals in YCrCb format at a pixel rate of 27.000 MHz without the use of dedicated timing reference signals.

To display a DVD movie on a TV and computer monitor simultaneously with high-quality MPEG2 image format, the CX25870/871 must be integrated into the hardware design. Next, actual CCIR656 data must be sent from a MPEG2 decoding master device directly to the CX25870/871 encoder. Finally, various software steps are necessary so the encoder switches to its Slave interface and is set up to accept the interlaced YCrCb data and video timing reference codes.

The first programming step is to configure the CX25870/871 to accept interlaced 4:2:2 YCrCb data with an active resolution of 720x480 and output a standard NTSC video output. The pertinent set of conditions for this option are:

- Type of Digital Video Input: Interlaced 4:2:2 YCrCb
- Active Resolution (HorizontalxVertical): 720 pixels x 480 lines
- Overscan Compensation: None. Horizontal = 0%; Vertical = 0%
- Interface: CX25870/871 is clock and timing slave
- Pixel Rate 27.000 MHz
- Type of Analog Video Output: Standard NTSC[NTSC-M]

Given this set of conditions, autoconfiguration mode 28 is a perfect fit. As a result, simply use the MPEG2 decoders serial bus mastering ability to program the CX25870/871s CONFIG[5:0] field with a binary value of 011100. This translates into writing a hexadecimal number of 0x34 to register 0xB8. Once the encoder acknowledges this write to its autoconfiguration register, it automatically loads the appropriate values for this type of DVD configuration into its register indices from 0x76 to 0xB4, including register 0x38. The exact data transferred into these registers is contained in Appendix C.

After completion of the autoconfiguration command, the encoder expects to receive interlaced 4:2:2 YCrCb data from the clock and timing master device at a rate of 27.000 MHz with blanking regions being defined by HSYNC* and VSYNC*. Since these external signals, by definition, do not exist in CCIR656 mode, a second and final programming step is required.

After enabling autoconfiguration mode 28, the programmer must make sure to set (=1) the E656 bit. This is bit 6 of register 0xD6 and enables a CCIR656 input to be received via the CX25870/871s P[7:0] port. Once this is done, the encoder deciphers digital blanking through the SAV and EAV codes and disregards the synchronization signals.

Only after the completion of these steps will a DVD stream be properly encoded and rendered onto the television by the VGA Encoder.

For CCIR Mode operation with a PAL Composite or S-Video output, use Autoconfiguration Mode 29 instead of autoconfiguration mode 28 and program the master device to send a digital frame with an active resolution of 720x576.

1.3.39 CCIR601 Mode Operation for DVD Playback

Data coming from a DVD is decoded by a MPEG2 decoder or graphics controller into a format called CCIR601. CCIR601 is the more common name for 4:2:2 YCrCb data at a 27 MHz pixel rate, as specified in the ITU-R BT.601 standard. This specification was developed specifically for the digitalization of color video signals.

To play a DVD movie on a television in addition to a CRT monitor, the CX25870/871, a CCIR601 compatible encoder, must be integrated into the hardware design. Actual CCIR601 data must be sent from a MPEG2 decoding master device directly to the CX25870/871 encoder. This can be either a dedicated MPEG2 decoder chip or a graphics controller with this functionality. Various software steps are necessary so the encoder enters slave or master interface and is set up to accept the interlaced YCrCb data or noninterlaced RGB digital format. After all of these steps have been executed properly, a DVD movie stream is properly encoded and rendered onto the television by the VGA encoder.

There are different capabilities among graphics controllers, MPEG2 decoders, and proprietary ASICs that impact the particular DVD implementation. This section seeks to cover all the possible hardware/software configurations and the trade-offs associated with each. If the reader has an interface idea about the routing of data from the CCIR601 source to encoder that is not discussed here, please contact your local Conexant Field Applications Engineer for further technical support.

1.3.39.1 CCIR601 Data In/NTSC Out

The first option to playing a DVD movie via the CX25870/871 is to send the digital video CCIR601 data directly to the encoder from the MPEG2 decoder. In this case, the graphics controller does not have any effect on the CCIR601 digital stream arriving at the input of the encoder because it bypassed the data or the data was routed around the controller. In either case, the CX25870/871 must be configured to accept interlaced 4:2:2 YCrCb data with an active resolution of 720x480 and output a standard NTSC video output. The pertinent set of conditions for this option are:

- Type of Digital Video Input: Interlaced 4:2:2 YCrCb
- Active Resolution (HorizontalxVertical): 720 pixels x 480 lines
- Overscan Compensation: None. Horizontal = 0%; Vertical = 0%
- Interface: CX25870/871 is clock and timing slave
- Pixel Rate 27.000 MHz
- Type of Analog Video Output: Standard NTSC[NTSC-M]

Given this set of conditions, autoconfiguration mode 28 is a perfect fit for this architectural option. As a result, simply use the MPEG2 decoders serial bus mastering ability to program the CX25870/871s CONFIG[5:0] field with a binary value of 011100. This translates into writing a hexadecimal number of 0x34 to register 0xB8. Once the encoder acknowledges this write to its autoconfiguration register, it automatically loads the appropriate value for this type of DVD configuration into its register indices from 0x76 to 0xB4 including 0x38. The exact data transferred into these registers is contained in Appendix C.

After completion of the autoconfiguration command, the encoder expects to receive interlaced CCIR601 data from the clock and timing master device at a rate of 27.000 MHz. If this occurs, approximately 40 clocks later (i.e., pipeline delay), the encoder begins transmitting a NTSC-compatible S-Video or Composite Video signal containing the DVD movie.

1.3.39.2 CCIR601 Data In/PAL Out

The second option is very similar to the first. In this scenario, the interlaced CCIR601 video data is transmitted directly to the encoder from the MPEG2 decoder. However, instead of generating a NTSC signal, the encoder produces a PAL-BDGHI compatible DVD movie output. The active resolution changes as well for this alternative by increasing to 720x576.

To enable DVD playback in this scenario, the CX25870/871 must be configured to accept interlaced 4:2:2 YCrCb data with an active resolution of 720x576 and output a standard PAL video output. The pertinent set of conditions for this option are:

- Type of Digital Video Input: Interlaced, 4:2:2 YCrCb
- Active Resolution (HorizontalxVertical): 720 pixels x 576 lines
- Overscan Compensation: None. Horizontal = 0%; Vertical = 0%
- Interface: CX25870/871 is clock and timing slave
- Pixel Rate 27.000 MHz
- Type of Analog Video Output: Standard PAL[PAL-BDGHI]

Given this set of conditions, autoconfiguration mode 29 is a perfect fit for this architectural option. As a result, simply use the MPEG2 decoder's serial bus mastering ability to program the CX25870/871s CONFIG[5:0] field with a binary value of 011101. This translates into writing a hexadecimal number of 0x35 to register 0xB8. Once the encoder acknowledges this write to its autoconfiguration register, it automatically loads the appropriate value for this type of DVD configuration into its register indices from 0x76 to 0xB4 including 0x38. The exact data transferred into these registers is contained in Appendix C.

After completion of the autoconfiguration command, the encoder expects to receive interlaced CCIR601 data from the clock and timing master device at a rate of 27.000 MHz. If this occurs, approximately 40 clocks later (i.e., pipeline delay), the encoder will begin transmitting a PAL-compliant S-Video or Composite video signal containing the DVD Movie.

1.3.39.3 VGA-Compatible RGB Data In/NTSC Out

The third option for DVD playback is unlike the previous two methods. In this case, the MPEG2 decoder's 4:2:2 YCrCb interlaced data is sent as an input to the graphics controller. In turn, the controller deinterlaces and color space converts the CCIR601 data into a noninterlaced RGB format. The encoder finally ends up receiving this standard VGA digital data from the graphics controllers digital output port for generation into an analog TV signal.

This design is illustrated in Figure 1-33.

Figure 1-33. DVD Playback Utilizing Graphics Controller for Color-Space and Progressive Scan Conversion

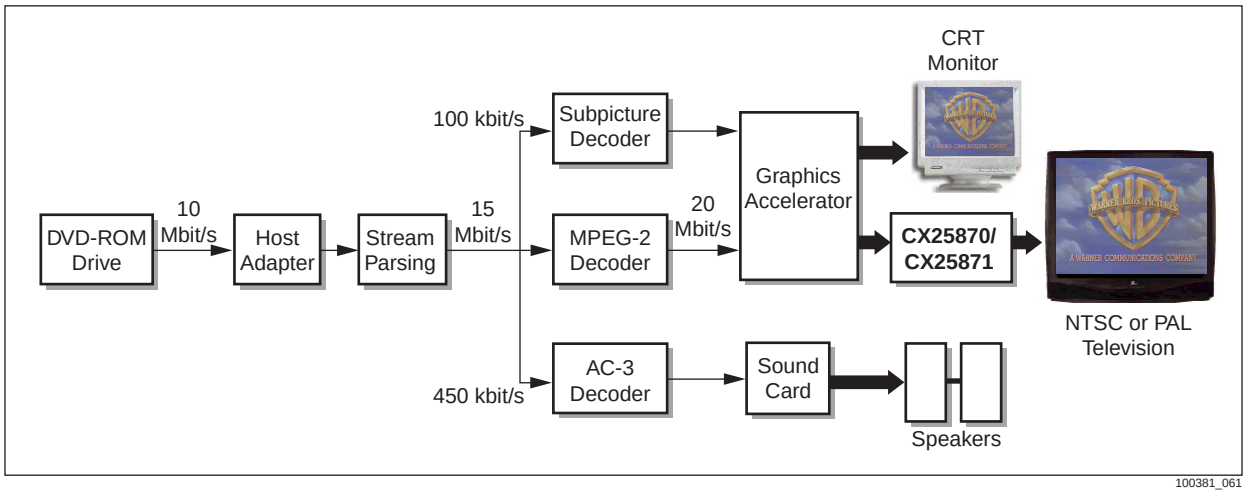

To enable DVD playback with this architecture, the graphics controller must be able to deinterlace and color space convert the CCIR601 input data from the MPEG2 decoding source. Furthermore, since the pixel clock frequency is not 27.000 MHz any longer, the graphics controller must have the ability to synchronize the pixel data to the clock rate dictated by the CX25870/871s CLKO signal. Finally, the controller must be able to function as the clocking master and timing slave as described in Section 1.3.7 of this data sheet.

The recommended interface for the CX25870/871 for this option is Master and the encoder must be programmed to accept noninterlaced RGB data and output a standard NTSC video output. The pertinent factors for this option are:

- Type of Digital Video Input: Progressive Scan/Noninterlaced; 24-bit RGB per pixel Multiplexed Input Format
- Active Resolution (HorizontalxVertical): 720x480
- Overscan Compensation Ratio: Minimal; Horizontal = 1.24%; Vertical = 1.23%
- Interface: CX25870/871 is clock and timing master
- Pixel Rate 27.6923 MHz
- Type of Analog Video Output: Standard NTSC[NTSC-M]

Given this set of conditions, autoconfiguration mode 44 is a perfect fit for this architectural option. As a result, simply use the graphics accelerator's serial bus mastering ability to program the CX25870/871s CONFIG[5:0] field with a binary value of 101100. This translates into writing a hexadecimal number of 0x54 to register 0xB8. Once the encoder acknowledges this write to its autoconfiguration register, it automatically loads the appropriate values for this type of DVD configuration into its register indices from 0x76 to 0xB4 including 0x38. The exact data transferred into these registers is contained in Appendix C.

After completion of the autoconfiguration command, the encoder enters Master interface. In addition, the CX25870/871 will expect to receive digital frames with an active resolution of 720x480 comprised of noninterlaced RGB data at a pixel rate of 27.6923 MHz. If these events occur, approximately 40 clocks later (i.e., pipeline delay), the encoder will begin transmitting a NTSC-compliant S-Video or Composite video signal containing the DVD movie.

1.3.40 SECAM Output

Unlike its predecessor, the Bt868/869, the CX25870/871 now includes an encoder block for conversion of digital video data into a SECAM Composite (CVBS) and/or a SECAM S-Video signal.

Like other video outputs, any active resolution from 320x200 to 1024x768 can be supported with the SECAM encoder block. The circuit accepts RGB or YCrCb data in a variety of multiplexed or nonmultiplexed input formats, reformats the digital data, and finally routes the stream through the four on-chip Digital-to-Analog Converters (DACs). The encoder supports all variations of the SECAM analog video standard including those commonly used in France (SECAM-L), Eastern Europe/Russia (D, K, K1), and Greece/Middle East (B, G, H).

The SECAM specific processing is achieved in this block by a pre-emphasis of the color difference signals. Once data is received, it is converted to an internal YUV format. Next, the Y component is filtered and then upsampled to the system clock frequency while the UV components are used to frequency modulate the two subcarrier frequencies appropriately.

The luminance signal is always low-pass filtered using the upsampling filter response illustrated in Figure 1-24. Additional peaking or reduction filters can be enabled (see Figures 1-25 through 1-27), using the PKFIL_SEL[1:0] bit field. The peaking filters are optimized for a high bandwidth frequency response and optimal picture quality.

The default chrominance filter response is illustrated in Figure 1-28, but an alternate wide bandwidth response can be selected by setting register bit CHROMA_BW, as illustrated in Figure 1-29. The color subcarrier frequencies, 4.25000 MHz for Db and 4.40625 MHz for Dr, are controlled by a number of registers, chiefly MSC_DB[31:0] for Db and MSC[31:0] for Dr. Figure 1-30 illustrates the SECAM pre-emphasis filter response at higher (>3 MHz) frequencies within the standard definition television passband.

Table 1-21 lists three complete register sets for the most common desktop input resolutions with the SECAM output. This output adheres to the SECAM target video parameters included in Table A-1. This occurs only if the Conexant encoder is programmed correctly with the register values listed in Table 1-21, the master device provides the RGB data at the listed clock frequency (CLKI/CLKO), and the interface bits are modified to match the desired connection type.

Table 1-21. Register Values for 640x480 / 800x600 / 1024x768 RGB In, SECAM-L Out (1 of 4)

	640x480 RGB in, SECAM-L out HOC = 16.55%, VOC = 16.66%	800x600 RGB in, SECAM-L out HOC = 14.52% VOC=13.19%	1024x768 RGB in, SECAM-L out HOC = 12.72% VOC = 12.15%
CLKI/CLKO Frequency	29.500007 MHz	36.000000 MHz	67.687489 MHz
State of PLL_32CLK bit	0	0	1
Internal Pixel Clock Frequency	29.500007 MHz	36.000000 MHz	45.124993 MHz
Register Address	**CX25870 Register Values**	**CX25870 Register Values**	**CX25870 Register Values**
0x00	00	00	00
0x02	00	00	00
0x04	00	00	00
0x06	00	00	00
0x2E	00	00	00
0x30	00	00	00
0x32	00	00	00
0x34	00	00	00
0x36	00	00	00
0x38	00	00	20
0x3A	00	00	00
0x3C	80	80	80
0x3E	80	80	80
0x40	80	80	80
0x42(5)	8B	8E	9B
0x44(5)	A0	E3	5D
0x46(5)	E1	38	1C
0x48(5)	24	1E	18
0x4A(5)	28	3A	5F
0x4C(5)	3B	77	C4
0x4E(5)	25	1C	13
0x50(5)	28	3A	5F
0x52(5)	3B	77	C4
0x54(5)	25	1C	13

Table 1-21. Register Values for 640x480 / 800x600 / 1024x768 RGB In, SECAM-L Out (2 of 4)

	640x480 RGB in, SECAM-L out HOC = 16.55%, VOC = 16.66%	800x600 RGB in, SECAM-L out HOC = 14.52% VOC=13.19%	1024x768 RGB in, SECAM-L out HOC = 12.72% VOC = 12.15%
Register Address	**CX25870 Register Values**	**CX25870 Register Values**	**CX25870 Register Values**
0x56(5)	AC	18	7A
0x58(5)	20	27	31
0x5A	00	00	00
0x5C	00	00	00
0x5E	00	00	00
0x60	00	00	00
0x62	00	00	00
0x64	00	00	00
0x66	3C	E3	D9
0x68	00	00	00
0x6A	00	00	00
0x6C(1)	46	46	46
0x6E	00	00	00
0x70	0F	0F	0F
0x72	00	00	00
0x74	01	01	01
0x76	60	00	48
0x78	80	20	00
0x7A	8A	AA	D4
0x7C	A6	CA	FC
0x7E	68	9A	E2
0x80	C1	0D	79
0x82	2E	29	28
0x84	F2	FC	FE
0x86	27	39	4B
0x88	00	00	00
0x8A	B0	C0	91
0x8C	0A	8C	5E
0x8E	0B	03	0D
0x90	71	EE	B6

Table 1-21. Register Values for 640x480 / 800x600 / 1024x768 RGB In, SECAM-L Out (3 of 4)

	640x480 RGB in, SECAM-L out HOC = 16.55%, VOC = 16.66%	800x600 RGB in, SECAM-L out HOC = 14.52% VOC=13.19%	1024x768 RGB in, SECAM-L out HOC = 12.72% VOC = 12.15%
Register Address	**CX25870 Register Values**	**CX25870 Register Values**	**CX25870 Register Values**
0x92	5A	5F	76
0x94	E0	58	00
0x96	06	0A	3F
0x98	00	66	A4
0x9A	50	96	A0
0x9C	72	0	55
0x9E	1C	0	15
0xA0	0D	10	1E
0xA2	8C	8C	24
0xA4	F0	F0	F0
0xA6	58	57	56
0xA8(5)	76	5F	4B
0xAA(5)	4D	3E	31
0xAC	8C	8C	8C
0xAE(5)	EA	55	76
0xB0(5)	BE	55	4A
0xB2(5)	3C	55	FF
0xB4(5)	26	1F	18
0xB6	00	0	0
0xB8	01	3	33
0xBA	00	0	0
0xBC	00	0	0
0xBE	00	0	0
0xC0	00	0	0
0xC2	00	0	0
0xC4(2)	01	1	1
0xC6(3)	03	3	3
0xC8	1B	1B	1B

Table 1-21. Register Values for 640x480 / 800x600 / 1024x768 RGB In, SECAM-L Out (4 of 4)

	640x480 RGB in, SECAM-L out HOC = 16.55%, VOC = 16.66%	800x600 RGB in, SECAM-L out HOC = 14.52% VOC=13.19%	1024x768 RGB in, SECAM-L out HOC = 12.72% VOC = 12.15%
Register Address	**CX25870 Register Values**	**CX25870 Register Values**	**CX25870 Register Values**
0xCA	C0	C0	C0
0xCC	C0	C0	C0
0xCE(4)	24	24	24
0xD0	00	0	0
0xD2	00	0	0
0xD4	00	0	0
0xD6	00	0	0
0xD8	40	40	40

NOTE(S):
1. Register 0x6C contains the TIMING_RESET bit. Set this bit as your last programming step and the CX25870 will clear it automatically later.
2. Register 0xC4 contains the EN_OUT bit. Adjust according to your design's interface as necessary.
3. Register 0xC6 contains the EN_BLANKO, EN_DOT, and IN_MODE[2:0] bits. Adjust according to your design's interface as necessary.
4. Register 0xCE contains the OUT_MUXD[1:0], OUTMUXC[1:0], OUTMUXB[1:0], and OUTMUXA[1:0] bit fields for output routing. Adjust according to your design's interface as necessary.
5. This is a SECAM specific register.

The procedure required to obtain a SECAM output with an overscan compensation percentage that differs from those solutions in Table 1-21 is fairly simple. First, configure the encoder so it generates a standard PAL-B output with the desired overscan compensation percentage. This can be done through the use of an autoconfiguration mode, a hand-generated, or a predefined register set. Second, perform a full register read-back from the CX25870. Carefully note the value for register 0xA2. Third, program only the bits found in Table 1-22 to their new state within the CX25870.

Table 1-22. Vital SECAM Bit Settings–Register 0xA2

Bit Name	Location	State for PAL-BDGHI	State for SECAM
FM	Bit 7 of register 0xA2	0	1
PAL_MD	Bit 5 of register 0xA2	1	0
VSYNC_DUR	Bit 3 of register 0xA2	0	0

Finally, calculate the values for the MSC_DB[31:0], MCR[7:0], MCB[7:0], FILFSCONV[5:0], FIL4286INCR[7:0], and MSC[31:0] registers for the particular SECAM overscan solution. To accomplish this task, read back both values that comprise the HCLKO[11:0] register, convert it to decimal (base 10), and use it in the equations below. After solving each SECAM register equation, perform a conversion back to a hexadecimal number and program the appropriate registers with their new SECAM specific values.

The equations for generation of a SECAM output based on a RGB input only are:

MSC_DB[31:0] = int ((272 / H_CLKO[11:0]) * 2^{32} + 0.5)

DR_LIMITP[10:0] = ((4.756 MHz/ Internal Pixel Clock Frequency)*2^13)
DR_LIMITN[10:0] = ((3.9 MHz/ Internal Pixel Clock Frequency)*2^13)
DB_LIMITP[10:0] = ((4.756 MHz/ Internal Pixel Clock Frequency)*2^13)
DB_LIMITN[10:0] = ((3.9 MHz/ Internal Pixel Clock Frequency)*2^13)

- If PLL_CLK32 is 0, then Internal Pixel Clock Frequency = CLKI = CLKO.
- If PLL_CLK32 is 1(for some overscan ratios in 800x600 and all 1024x768 resolutions), then Internal Pixel Clock Frequency = (2/3) * CLKI

FIL4286INCR[7:0]: Six equations required to find hex value

SCINCR_OFF = int(8192 * 4.286 * 1728 / (27 * H_CLKO[11:0]) + 0.5)
SCINCR_OFFh = dec2hex(SCINCR_OFF)
SCINCR_OFFb = hex2bin(SCINCR_OFFh)
SCINCR_INTb = SCINCR_OFFb &(bitwise AND operator) with 111111111(binary)
SCINCR_INTnot = NOT[SCINCR_INTb]
FIL4286INCR[7:0] = [BIN2DEC{SCINCR_INTnot}]
2

FILFSCONV[5:0] = int((27 * H_CLKO[11:0] * 1.087) / 1728 + 0.5)

For RGB input only:

MCR[7:0] = int ((920.26) / (288036.0 * H_CLKO[11:0] * SINX) * 2^{26} + 0.5)
where SINX = [sin (p * Fsc / CLKI)] / (p * Fsc / CLKI)

MCB[7:0] = int ((598.15) / (288036.0 * H_CLKO[11:0] * SINX) * 2^{26} + 0.5)
where SINX = [sin (p * Fsc / CLKI)] / (p * Fsc / CLKI)

MSC[31:0] = int ((282 / H_CLKO[11:0]) * 2^{32} + 0.5)

MY = same as PAL, no change required for SECAM

For YCrCb input only:

MCR[7:0] = int
(1.902/(224*0.713)*(0.28/Fclk)/(84*SINX)*2^{27}+0.5)

MCB[7:0] = int
(1.505/(224*0.564)*(0.28/Fclk)/(84*SINX)*2^{27}+0.5)

MY = same as PAL, no change required for SECAM

Table 1-23. SECAM Specific Registers

Register Address	Description	Value for PAL-BDGHI	Value for SECAM
0x42	MSC_DB[7:0]	Not Used for PAL-BDGHI	Use MSC_DB[31:0] equation
0x44	MSC_DB[15:8]	Not Used for PAL-BDGHI	Use MSC_DB[31:0] equation
0x46	MSC_DB[23:16]	Not Used for PAL-BDGHI	Use MSC_DB[31:0] equation
0x48	MSC_DB[31:24]	Not Used for PAL-BDGHI	Use MSC_DB[31:0] equation
0x4A	DR_LIMITP[7:0]	Not Used for PAL-BDGHI	Use DR_LIMITP[10:0] equation
0x4C	DR_LIMITN[7:0]	Not Used for PAL-BDGHI	Use DR_LIMITN[10:0] equation
0x4E	DR_LIMITN[10:8] & DR_LIMITP[10:8]	Not Used for PAL-BDGHI	Use DR_LIMITN[10:0] equation Use DR_LIMITP[10:0] equation
0x50	DB_LIMITP[7:0]	Not Used for PAL-BDGHI	Use DB_LIMITP[10:0] equation
0x52	DB_LIMITN[7:0]	Not Used for PAL-BDGHI	Use DB_LIMITN[10:0] equation
0x54	DB_LIMITN[10:8] & DB_LIMITP[10:8]	Not Used for PAL-BDGHI	Use DB_LIMITN[10:0] equation Use DB_LIMITP[10:0] equation
0x56	FIL4286INCR[7:0]	Not Used for PAL-BDGHI	Use FIL4286INCR[7:0] equation
0x58	Bits 5-0 are FILFSCONV[5:0]	Not Used for PAL-BDGHI	Use FILFSCONV[5:0] equation
0xA8	MCR[7:0]	Overscan Ratio Dependent	Use MCR[7:0] equation
0xAA	MCB[7:0]	Overscan Ratio Dependent	Use MCB[7:0] equation
0xAE	MSC[7:0]	Overscan Ratio Dependent	Use MSC[31:0] equation
0xB0	MSC[15:8]	Overscan Ratio Dependent	Use MSC[31:0] equation
0xB2	MSC[23:16]	Overscan Ratio Dependent	Use MSC[31:0] equation
0xB4	MSC[31:24]	Overscan Ratio Dependent	Use MSC[31:0] equation

1.3.41 Macrovision Copy Protection

The CX25871 device supports Version 7.1.L1 of the Macrovision specification for copy protection for all NTSC, PAL, and SECAM video outputs. The CX25870 does not support the Macrovision feature whatsoever.

NOTE: The CX25871 will power-up with Macrovision copy protection enabled as required by Macrovision Version 7.1.L1.

For detailed instructions and lists of default register values for the CX25871 obtain a Macrovision license and then ask for the *Macrovision Process Supplement* application note from your local Conexant salesperson or field application engineer.

1.3.42 HDTV Output Mode

The CX25870/871 includes an HDTV Output Mode that generates the analog RGB or analog YP_BP_R component video outputs necessary for driving an HDTV's HD input port.

While generating HDTV outputs, the device accepts RGB or YP_RP_B digital data in a 480p, 720p, or 1080i ATSC resolution. After a pipeline delay, it outputs either analog RGB or analog YP_BP_R signals and automatically inserts trilevel synchronization pulses (when necessary) and vertical synchronizing 'broad pulses'. The output waveforms, input data requirements and all configuration details are explained in Appendix E. The device complies with all major SMPTE and EIA standards governing the HDTV resolutions.

1.3.43 SCART Output

In this mode of operation, the CX25870/871 can be used successfully to provide one full Red/Green/Blue/Composite (or optionally, a 2-signal Luminance and Chrominance) SCART/Peritel output to drive SCART-compatible televisions or VCRs. Many PAL/European TVs being manufactured now have SCART compatible sockets, that allows the television and the set top box, graphics card, or game console driving it to work in RGB color instead of the standard composite. The picture quality for full SCART is significantly better due to the individual RGB Composite signals being sent directly to the TV color guns. This is opposed to the TV having to modulate and decode the RGB signals from another color format. This ultimately yields a crisper picture.

On power-up, the CX25870/871 will output NTSC or PAL standard-definition television outputs depending on the state of the PAL pin. To switch the device into SCART Output Mode with three sync-less Red/Green/Blue (RGB) analog outputs and a single Composite (CVBS) PAL video output from the fourth DAC, program the encoder into a satisfactory PAL output mode and then perform the sequence of serial writes found in Table 1-24.

Table 1-24. Serial Writes Required to Switch CX25870/871 into SCART Output Operation

Bit Name	Location	Value	Comment
EN_SCART	Bit 3–Register 0x6C	1	Enables SCART Output mode. DACs will transmit Video[0-3] as SCART compatible RGB/CVBS outputs. By default, in SCART Output mode, the CX25870 will transmit: DAC_A = Video[0] = Red DAC_B = Video[1] = Green DAC_C = Video[2] = Blue DAC_D = Video[3] = PAL Composite (CVBS)
OUT_MUXD[1:0] OUT_MUXC[1:0] OUT_MUXB[1:0] OUT_MUXA[1:0]	Bits 7:0–Register CE	E4	By configuring the DAC routing register, the CX25870 will now transmit: DAC_A = Video[0] = 00 = Red DAC_B = Video[1] = 01 = Green DAC_C = Video[2] = 10 = Blue DAC_D = Video[3] = 11 = PAL Composite (CVBS)
OUT_MODE[1:0]	Bits 3:2–Register D6	11	Forces CX25870 to generate SCART output mode.

NOTE: No change to the incoming or outgoing HSYNC* and VSYNC* signal frequencies are necessary for SCART generation. The sync rates should continue to match those found with PAL-BDGHI transmission.

While the CX25870/871 is in SCART outmode, the composite video output (Video[3]) contains a standard bilevel analog sync along with all other components that comprise a standard PAL-BDGHI video signal. The sync pulse has an amplitude of 0 mV to 300 mV peak-to-peak and a duration of 4.70 µs by default. The amplitude can only be adjusted through the use of external passives, but its width can be adjusted through serial writing of the CX25870 HSYNC_WIDTH register.

The CX25870's Composite should be used by the subsystem to provide the positive-going Video output/sync output expected by SCART-compliant display devices. In other words, the PAL Composite output should be fed into the Video Input (Contact #20-CEI IEC 933-1) on the SCART connector. CVBS will possess the same bandwidth and time delays as the CX25870 RGB primary color signals. The inclusion of a full composite video signal as the 4th output exceeds the SCART capabilities of some non-Conexant Flicker Filter encoders which choose to output only Composite Sync as the 4th output. This implementation benefits the customer because some European Set-Top Boxes connect to TVs solely through the SCART connector. If the TV only receives Composite video via the SCART connector, and the Set Top Box is set to RGB output with sync for blanking (not CVBS) on pin 20, a picture will not be present at all on the TV. However, with the CX25870, if the TV only receives CVBS (not RGB) and the Set Top Box is set to RGB output with CVBS on pin 20 the customer will get a colorful picture on his TV.

The RGB primary color signals generated in SCART mode will not contain any embedded syncs. For each output, the difference between the peak value (pure white) and blanking level is 0.7 V (± 3 dB). Therefore, the blanking level will reside at GND (0 mV) and the maximum level is 700 mV for RGB. The HSYNC* and VSYNC* digital inputs received by the CX25870/871 continue to act as a trigger to start a new line and new frame respectively as is the case with Composite and SVHS outputs. The RGB signals are blanked in accordance with the values contained in the H_BLANKO and V_BLANKO registers, with H_CLKO and H_ACTIVE playing a lesser role.

The primary color signals expect a 75 Ω load from the display device. Correct RGB amplitudes are generated when the CX25870's SCART outputs each 'see' an equivalent impedance of 37.5 Ω between the source and destination.

By default, the RGB positive-going signals are transmitted from the CX25870 in the following manner:

Table 1-25. Default SCART Outgoing Signal Assignments

Pin # on CX25870/871	SCART Output
68 = DACA	Video[0] = Red Primary Color
70 = DACB	Video[1] = Green Primary Color
72 = DACC	Video[2] = Blue Primary Color
66 = DACD	Video[3] = PAL-BDGHI Composite

NOTE: Video[0-3] can be routed out of any of the 4 on-chip DACs by adjusting the appropriate OUT_MUXA/B/C/D[1:0] bits.

Other major characteristics of the CX25870/871 SCART Output Mode are:

- Acceptable digital RGB inputs include 24/16/or 15 bits per pixel multiplexed or nonmultiplexed, noninterlaced RGB.
- Acceptable digital YCrCb inputs include 24/16 bits per pixel multiplexed or nonmultiplexed, noninterlaced YCrCb.
- CX25870 can operate in master, pseudo-master, or slave interface.
- Pixel sampling rate in this mode is determined based on the incoming and outgoing clock frequencies (CLKI and CLKO).
- DAC resolution for all DACs = 10-bits.
- Red/Green/Blue/Composite SCART Output from CX25870/871 limited to a max active resolution of 800 x 600.
- Y/C SCART output OK to a maximum active resolution of 1024 x 768.
- Compliance with the European EN50-049 SCART connector standard. Blue should be received as Pin #7, Green as Pin #11, Red as Pin #15, and CVBS Out from the CX25870 as Composite Out at Pin #19 (Display Side of Connector).
- Compliance with the CEI IEC Publication 933-1 standard. Blue should be received as Pin #7, Green as Pin #11, Red as Pin #15, and CVBS Out from the CX25870 as Composite Out at Pin #19 (Display Side of Connector).

The CX25870 is compliant with the major standards and technical reports governing the SCART interface. Table 1-26 summarizes the pins to be used for transmission of SCART RGB/CVBS video with this Conexant device.

Table 1-26. CX25870 SCART Outputs for Different SCART Standards

RGB Standard	Red	Green	Blue	Composite/Blanking
European EN50-049 SCART (1) connector	Pin 15	Pin 11	Pin 7	Pin 19 -Composite Out (To Display)
CEI IEC 933-1 : (1) BBC SCART Arrangement #1	Pin 15	Pin 11	Pin 7	Pin 19 - Composite Out (To Display)
Y- C Standard	**Chroma**	**x**	**Luma**	**x**
Luminance - Chrominance (2) SCART: BBC SCART Arrangement #2	Pin 15	c	Pin 20	—

NOTE(S):
(1) Red/Green/Blue signals levels are from 0 V + 0.7 V peak-to-peak with 75 Ω load impedance.
(2) The Luminance – Chrominance Outputs for SCART are equivalent to PAL-BDGHI S-Video. Therefore, OUTMODE[1:0] should be programmed to 00, the EN_SCART bit should be reset to 0, and the OUTMUXA/B/C/D[1:0] bits adjusted according to which DACs must transmit Luminance(Video[1]) and Chrominance(Video[2]).

A specialized cable and connector are required to connect the CX25870's RGB/CVBS or Y/C outputs to the TV's SCART input. This cable can be procured from various European electronic stores and comes in at least two different arrangements. Consult the CEI IEC 933-1 specification (*Audio, Video, and Audiovisual systems-Interconnections and Matching Values*) for a precise illustration of their 21-contact SCART connector, video signal peak-peak values, and cordset types.

The most common types of SCART connectors are the so-called Type I and Type II variety. Figures 1-34 and 1-35 illustrate the recommended Type I and Type II SCART connector pinout arrangements.

Figure 1-34. CX25870 Driving a Type I SCART Connector (EN 50-049 and IEC 933-1 Compliant)

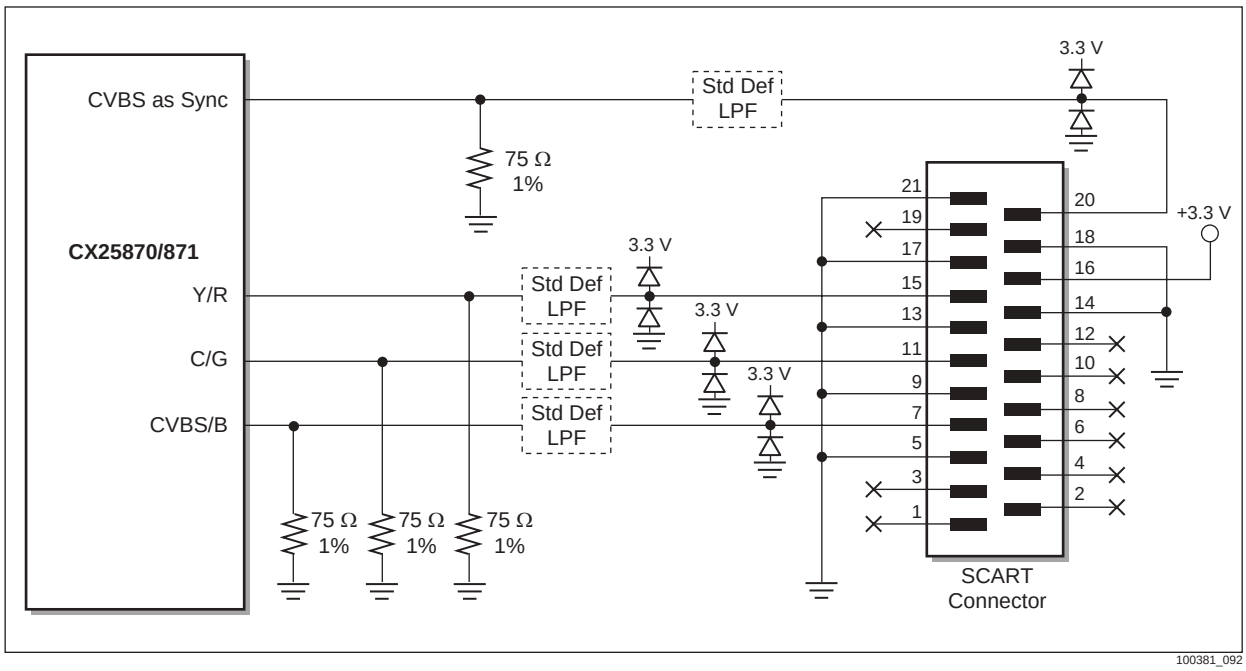

Figure 1-35. CX25870 Driving a Type II SCART Connector (Y/C and BBC SCART Compliant)

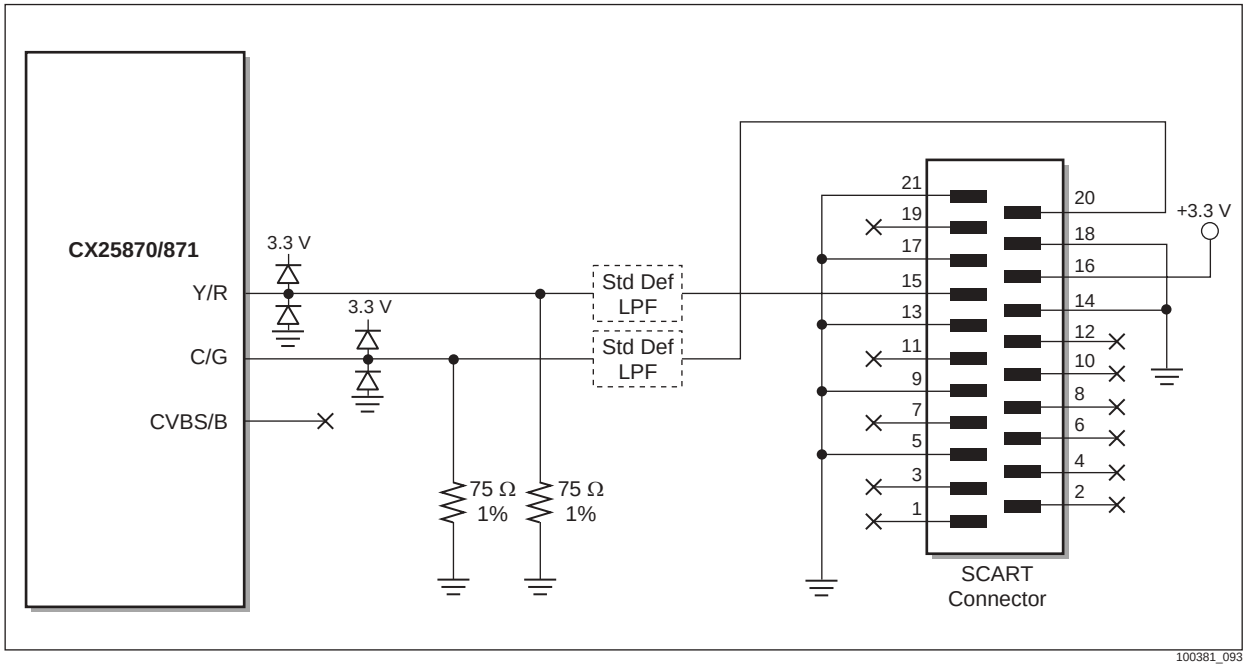

Conexant recommends that any designer utilizing the CX25870 with either type of SCART output utilize the same DAC low-pass filters used for standard definition TV outputs listed in Chapter 3.0 of this data sheet.

1.3.44 Interlaced Standard Definition Analog Component Video TV Outputs

In this mode of operation, the CX25870/25871 provides a set of Component Video Y, PB (B–Y), PR (R–Y) outputs based on a 480 line interlaced RGB or YCrCb digital input format. Some DVD Players, such as those made by Toshiba and Panasonic, call the Component Video Output format by their branded name, “ColorStream.” Others refer to the two EIA standards governing this video format–EIA-770.1 and EIA-770.2-A, and state this video type as Interlaced Component Video, 480i Component Video, or Component YUV. Regardless of the different names, the video format remains the same. For instructions on how to configure the CX25870/871 to generate progressive 480p Component Video (or ColorStream Pro), refer to that particular section in this data sheet.

The designer can enable ColorStream by using three of the CX25870’s DACs to generate two color difference signals (P_R and P_B sometimes referred to as C_R and C_B) and a single luminance signal (Y). These three channels allow the video generating device to bypass the TV’s internal Y/C separator and color decoder circuits. The analog information therefore gets routed directly into the TV’s matrix decoder. By sending the pure component video signal directly to a Component Video or ColorStream input-equipped display media, the input signal forgoes the extra processing that normally would degrade the analog image.

The advantage of this type of video is increased image quality combined with more lifelike colors and crisper detail. Because the video information is transferred over three separate connecting cables instead of two (for S-Video) or one (for Coaxial or RCA/Composite), 480i Component Video yields the best standard definition TV quality available. However, because we are still dealing with standard 480 line interlaced resolutions, this format remains inferior to High-Definition TV.

Output devices used for generating this format include, but are not limited to, Digital TV set top boxes, Satellite DBS Receiver Decoders, and DVD players. Input media capable of decoding ColorStream include television receivers and/or monitors.

While in the Component Video mode, all 10-bits of the CX25870's D/A converters are available for encoding. This results in a D/A conversion more accurate than conventional 8-bit, 13.500 MHz systems. The end result is a more artifact-free and clear image.

Some major characteristics governing the interlaced standard definition television analog component video interface are as follows:

Pixels per Active Line	Active Lines per Frame	Frame Rate (Hz)	Output Scanning Format	Total Samples per Line	Total Liens per Frame
720	480	30 / 1.001	Interlaced	858	525

- The digital input stream can be received in a progressive (i.e., noninterlaced) format or interlaced format. Interlaced data must be transmitted as ODD–EVEN–ODD … fields. The fields carry every other scan line in succession with succeeding fields carrying the lines not scanned by the previous field.
- Each field will be divided into an active picture area and a vertical blanking interval (VBI). Similarly, each line will be divided into an active pixel area and a horizontal blanking interval.
- The 480i video output will be capable of either a 4:3 or 16:9 aspect ratio through embedding of Wide Screen Signaling (WSS) bits into the appropriate lines in the VBI. Review the section 1.3.35 in the data sheet for more details.

If configured properly, the CX25870's EIA 770.2-A compliant Component Video luminance signal has a peak amplitude of 700 mV from the blanking level, with zero setup. A negative-going bilevel sync pulse of 300 mV, conforming to the timing requirements in Figure 1.3-a, is added to the Luma signal as the only timing reference for the complete Y P_R P_B set of signals.

Neither P_R nor P_B will contain an embedded sync pulse. Both will have a maximum peak amplitude of ± 350 mV. The DC level of P_R and P_B during the horizontal line shown in Figure 1-36 below will be at reference black with a voltage of 0 V. It will be generated in conformance with the EIA 770.2-A and EIA770.1 standards. The only differences between these standards are the presence of the 7.5 IRE setup pedestal and slightly different luminance levels. Check Tables 1-27 and 1-28 for complete programming instructions for either standard.

The three component video signals Y, P_B, and P_R will be coincident with respect to each other within ± 5.0 ns. Any filtering that introduces group delay exceeding 5.0 ns should be redesigned.

Figure 1-36. $YP_R P_B$ Component Video Signals using 100/0/100/0 Color Bars as the Digital Input Signal (Courtesy– EIA-770.2-A standard, page 8 and EIA-770.1 standard)

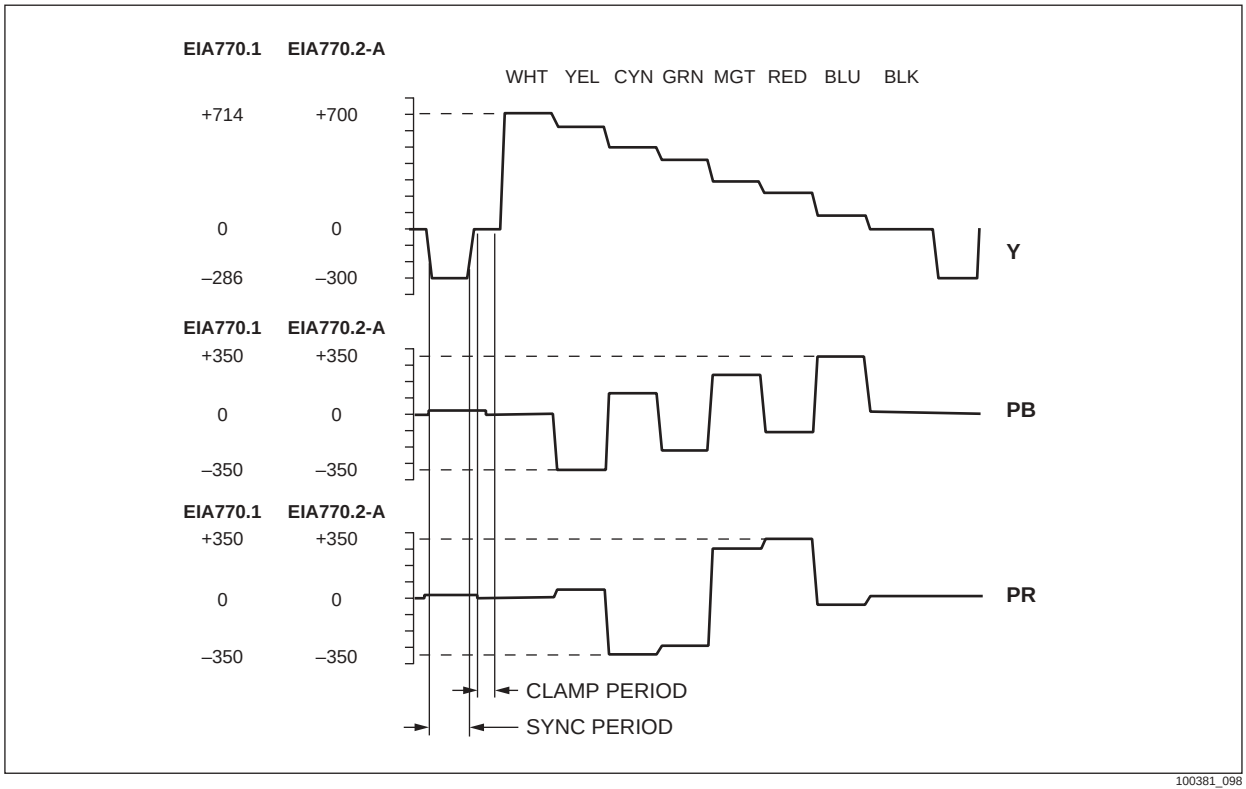

100381_098

To switch the device into 480i Component Video Output Mode with bilevel syncs embedded into each of the three YP_RP_B analog outputs, first, program up the CX25870/871 into a fully functional NTSC over-scan solution where Composite and/or S-Video is being generated out of at least three of the encoder's outputs. Next, change the registers found in Table 1-27 to the indicated values.

Table 1-27. Common Registers Required to Switch CX25870/25871 into EIA-770.2-A- or EIA-770.1-Compliant Component Video Outputs

Register/Bit Name	Location	Value	Comment
MCOMPY[7:0]	Bits 7:0 – Register 3C	80 (hex)	Gain multiplication factor for Y analog output.
MCOMPU[7:0]	Bits 7:0 – Register 3E	90 (hex)	Gain multiplication factor for P_B analog output.
MCOMPV[7:0]	Bits 7:0 – Register 40	66 (hex)	Gain multiplication factor for P_R analog output.
SETUP	Bit 1 - Register A2	1 (binary)	Required for EIA770.1 compliance. Enables 7.5 IRE pedestal normally present within NTSC-M active video lines.
OUT_MODE[1:0]	Bits 3:2 - Register D6	10 (binary)	Enables Component Video output mode. CX25870 DACs will transmit Video[0-3] as EIA-770.2-A or 770.1 compliant P_R / Y / P_B / Y_DELAY outputs.
OUT_MUXA[1:0] OUT_MUXB[1:0] OUT_MUXC[1:0] OUT_MUXD[1:0]	Bits 1:0 - Register CE Bits 3:2 - Register CE Bits 5:4 - Register CE Bits 7:6 - Register CE	00 (binary) 01 (binary) 10 (binary) 11 (binary)	By default, in Component Video output mode, the CX25870 will transmit: DAC_A = Video[0] = P_R = V DAC_B = Video[1] = Y DAC_C = Video[2] = P_B = U DAC_D = Video[3] = Y_DELAY

For EIA-770.1 compliant Component Video out, no other programming steps are required for the CX25870/871 beyond Table 1-27.

For the more common EIA-770.2-A compliant Component Video out, a few additional programming steps are required. These are listed in Table 1-28 below:

Table 1-28. Unique Registers Required to Switch CX25870/25871 into EIA-770.2-A- Compliant Component Video Outputs

Register/Bit Name	Location	Value	Comment
SETUP	Bit 1–Register A2	0 (binary)	Required for EIA770.2-A compliance. Removes 7.5 IRE pedestal normally present within NTSC-M active video lines.
SYNC_AMP[7:0]	Bits 7:0–Register A4	F0 (hex)	Multiplication factor for adjusting the analog sync amplitude tip to –300 mV for EIA-770.2-A.
MY[7:0]	Bits 7:0–Register AC	85 (hex)	Additional gain multiplication factor for Y EIA-770.2-A analog output. This register needs to be increased by 6 percent of its nominal value. For a NTSC output based on a RGB digital input, this register would be increased 6 percent to 8C (hex) from a nominal value of 85 (hex).

The analog Y, PB, and PR - Video[0-3] outputs can be routed out of any of the four on-chip DACs by adjusting the appropriate OUT_MUXA/B/C/D[1:0] bits. All of the OUT_MUX bits are contained in register 0xCE.

Because the CX25870 device has four DACs and only three are needed for Component Video, the designer can choose to use the 4th output, usually from DAC_D, for any purpose deemed necessary. This output can be configured to either the P_R, Y, P_B, or Y_DELAY output via OUT_MUXD. If the output is not going to be used whatsoever, Conexant recommends DAC_D be disabled by setting DACDISD (bit 3, Register BA). This will save on power dissipation.

The Component Video output signals expect a 75 Ω load to ground from the display medium. Correct Y, P_R, P_B amplitudes will be generated only when each CX25870 output sees an equivalent impedance of 37.5 Ω between the source and destination.

The CX25870 is compliant with the major standards and technical reports governing the Standard Definition TV Analog Component Video interface. The name of these standards are as follows:

- EIA 770.2-A–Standard Definition TV Analog Component Video Interface
- EIA 770.1–Standard Definition TV Analog Component Video Interface
- ANSI/SMPTE Standard 170M (1994) (M/NTSC) for Television–Composite Analog Video Signal–NTSC for Studio Applications

To obtain any of these specifications, visit Global Engineering Documents at: http://global.ihs.com/

Conexant recommends that any designer utilizing the CX25870 with a Component Video output utilize the same DAC low-pass filters used for standard definition TV outputs listed in Figure 3-2 of this data sheet.

1.3.45 VGA(RGB)—DAC Output Operation

In this mode of operation, the CX25870/871 acts as a general-purpose triple high-speed D/A converter used to drive video receivers, such as PC monitors. The encoder accomplishes this by bypassing most of the encoder blocks utilized for television outputs, such as the Flicker Filter and FIFO and routing the RGB or YCrCb digital data straight through to the on-chip 10-bit DACs. Once the data arrives at the DACs, it is quickly converted to a set of 700 mV peak-to-peak analog outputs, streamed through the respective DAC_X output pins, and routed onto the rest of the graphics system according to the PCB layout.

Optimal performance is achieved when the CX25870/871's current controlled DACs are terminated into appropriate resistive loads to produce voltage outputs. The chip's DAC outputs are specifically designed to produce video output levels with a total peak-peak active-region amplitude of 700 mV when directly connected to a single-ended, doubly terminated (Req = 37.5 Ω) load. With the recommended loading of two 75 Ω ± 1 percent resistors (one each for the transmitting and receiving side), the full-scale video amplitude is from 286 mV (blanking) to 986 mV (maximum luminance) and synchronization pulses from 0 mV (negative sync tip) to 286 mV (blanking) respectively. The analog synchronization pulse is generated by the CX25870/871 every time it receives a falling edge on either the HSYNC* or the VSYNC* input by default. These sync pulses can be disabled for the RGB outputs by following the steps found in Table 1-30.

On power-up, the CX25870/871 will output NTSC or PAL standard-definition television outputs depending on the state of the PAL pin. To switch the device into VGA-DAC Output Mode with bilevel syncs embedded on every Red/Green/Blue (RGB) analog output, perform the sequence of serial writes found in Table 1-29 only.

Table 1-29. Serial Writes Required to Switch CX25870/871 into VGA/DAC Output Operation

Bit Name	Location	Value	Comment
SLAVER	Bit 5–Register 0xBA	1	Ensures CX25871 in slave or pseudo-master interface
EN_XCLK	Bit 7–Register 0xA0	1	CLKI used as pixel clock source.
SETUP	Bit 1–Register 0xA2	0	Setup off. The +56 mV pedestal setup is disabled for active video lines.
OUT_MODE[1:0]	Bits 3:2–Register D6	11	Video [0-3] = 11 = VGA Output Mode: DAC_A = Video[0] = Red DAC_B = Video[1] = Green DAC_C = Video[2] = Blue
DAC_DISD	Bit 3–Register 0xBA	1	Disables DACD output. Current is set to 0 mA. Output voltage goes to 0 V.

Of course, the master device's timing signals (HSYNC*, VSYNC*, CLKI) and the digital data sent to the CX25870/871 must also be adjusted to ensure the proper operation of this mode.

Some applications, such as VESA compliant PC Monitors, dictate that the embedded bilevel syncs be completely absent from the RGB analog outputs. Fortunately, the CX25870/871 can provide VESA's 'syncless' outputs so long as the additional set of bits found in Table 1-30 are programmed as shown: Complete all steps in Tables 1-29 plus 1-30.

Table 1-30. Serial Writes Required to Remove Bilevel Syncs from all VGA/DAC Outputs

Bit Name	Location	Value	Comment
HDTV_EN	Bit 7—Register 0x28	1	DACs output HDTV compatible RGB
RASTER_SEL[1:0]	Bits[1:0]—Register 0x28	00	Default state. No need to reprogram.
RGB2PRPB	Bit 6—Register 0x28	0	Default state. No need to reprogram.
BPB_SYNC_DIS	Bit 3—Register 0x28	1	Disables sync on Blue output
GY_SYNC_DIS	Bit 4—Register 0x28	1	Disables sync on Green output
RPR_SYNC_DIS	Bit 5—Register 0x28	1	Disables sync on Red output
NOTE(S): When all bits in Tables 1-29 and 1-30 are programmed correctly, the active video level range will be from +286 mV to +986 mV.			

The outputs generated from the combined steps listed in Table 1-29 and Table 1-30 will not contain any embedded syncs, but will contain a positive 286 mV DC offset because the encoder cannot generate negative voltage levels. Therefore, the blanking level will reside at 286 mV and the maximum luminance level is 986 mV for the 3 different outputs. The HSYNC* and VSYNC* digital inputs received by the CX25870/871 will continue to cause blanking, but this is irrelevant since the data itself is blanked at these times.

To reiterate, the VESA Video Signal Standard specification requires that the DAC analog output stay between 0.0 Vdc and 0.700 Vdc +.07 V (or -.03 V) with no excursions at all times. Clearly, the blank and maximum luminance levels for the CX25870/871 are in violation of this specification. To compensate for the DC offset, the CX25870/871 is reliant on the VGA Monitor's decode capabilities to remove this DC deviation. Through testing, Conexant has determined that most, if not all, present-day monitors have this function to filter out minor DC offsets.

Other major characteristics of the CX25870/871 VGA—DAC Output Mode are:

- Acceptable digital RGB inputs include 24/16/or 15 bits per pixel multiplexed or nonmultiplexed RGB
- Acceptable digital YCrCb inputs include 24/16 bits per pixel multiplexed or nonmultiplexed YCrCb
- CX25870 can only be a slave to the data master in this type of operation
- Sampling rate in this mode is determined based on the incoming clock frequency (CLKI)
- DAC resolution for all DACs = 10-bits

Finally, Conexant recommends that any designer utilizing the CX25870 in this mode circumvent the three capacitors and one inductor found in the DAC low-pass filters used for standard definition TV outputs. Figure 1-37 illustrates one method of bypassing the capacitors and inductor. Note that an additional RCA (or other type) of connector is recommended in this case for the Red. Green, and Blue VGA Outputs.

Figure 1-37. Filterless DAC Outputs for VGA (RGB)—DAC Output Operation

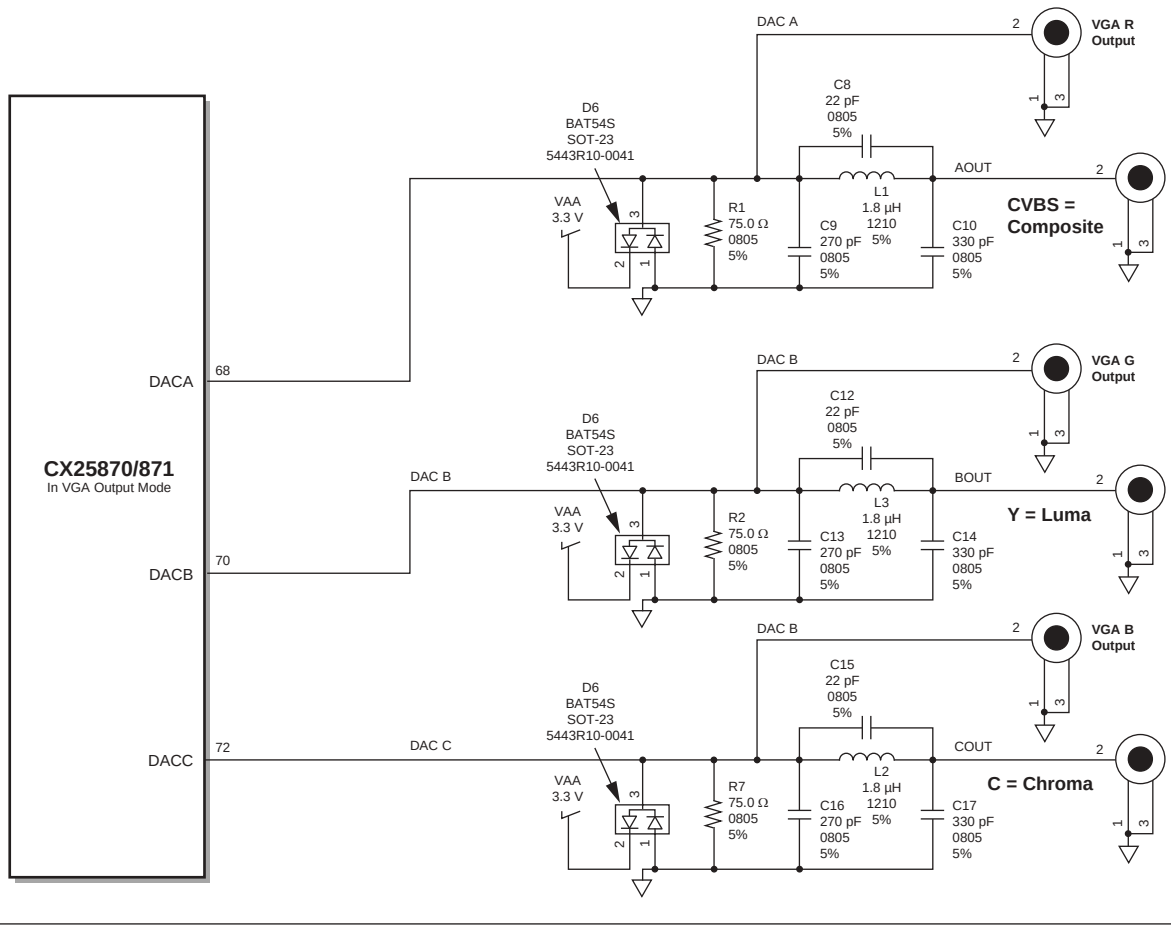

NOTE(S):
Make sure to have only one of the paired outputs plugged in simultaneously.

100381_083

1.3.46 TV Auto-Detection Procedures

The device can determine whether or not the DAC output is connected to a monitor by verifying that the output is doubly-terminated. The MONSTATx bit for the corresponding DAC is set to a 1 if the device senses a doubly-terminated load on a reset condition or if the CHECK_STAT register bit is set. While CHECK_STAT is set, the output is forced to 2/3 of VREF when terminated and 4/3 of VREF if unterminated. The MONSTATx bit reflects the condition when the DAC output is less than or equal to VREF. The CHECK_STAT bit is automatically cleared after two clock cycles.

The CX25870/871 can be read from using 2 different methods. The first method is called ***Standard*** serial read-back. To perform a read, simply have the master device issue the CX25870/871's serial device address (0x89 or 0x8B depending on the state of the encoders ALTADDR pin), transmit the particular subaddress (encoder register index) to read from, and then wait for the CX25870/871 to transmit the appropriate 8-bits of data. Of course, START and STOP conditions and ACKs must exist at the pertinent times as well, but this summarizes the basic procedure.

The second method that can be used to read back from the encoder is called the ***Legacy*** method. This is because the procedure that follows was the only manner in which Conexant's first generation encoder (i.e., Bt868/869) could be read from. For compatibility purposes, this method was carried forward and exists in this second generation encoder.

The ***Legacy*** procedure to follow for serial read-back and TV detection purposes is:

1. Write 01 to the ESTATUS[1:0]{bits D7=msb and D6 of register 0xC4}bit field. This sets up the encoder to read the MONSTAT data and check if the DACs have a TV connected.
2. Write the CHECK_STAT register bit to a one (bit D6 of register BA). This will latch the MONSTAT data internally and then clear itself.
3. Wait 600 µs to allow the analog nodes to reach their operating point.
4. Read the MONSTAT data by issuing 0x89 or 0x8B for the CX25870/871's device address. This ensures the least significant bit of the device write portion of the transaction is 1, which indicates to the encoder that it must send a byte of data on the next serial transaction. Do not write a subaddress to the encoder (this is not necessary since the first generation encoder only had one read register) and then read the next byte after the ACK. The 8-bit read in Step 1 contains either the CX25870's ID&VERSION (if ESTATUS was written to 00) or the CX25870's Monitor Detection for DACs C, B, and A + Closed Caption Status info and the FIELD # (if ESTATUS = 01). If ESTATUS was written to 10 in Step 1, the read byte will contain the PLL_LOCK, FIFO status bits, PAL bit, and BUSY bit.

Table 1-31 summarizes the meaning of the read-back bits when the agency procedure is used and ESTATUS[1:0] = 10, 01, or 00.

Table 1-31. ESTATUS[1:0] Read-back Bit Map

ESTATUS [1:0]	7	6	5	4	3	2	1	0
00	ID[2:0]			VERSION[4:0]				
01	MONSTAT_A	MONSTAT_B	MONSTAT_C	CCSTAT_E	CCSTAT_O	FIELD[2:0]		
10	Reserved	SECAM	PLL_RESET_OUT	PLL_LOCK	FIFO_OVER	FIFO_UNDER	PAL	RESERVED
NOTE(S): Descriptions of these bits are found in Table 2-4.								

5. If ESTATUS = 01, the serial master should receive one byte of information telling it the following information in this order:
   a. Monitor Connection Status for DACA output (MONSTAT_A = most significant bit).
   b. Monitor Connection Status for DACB output (MONSTAT_B).
   c. Monitor Connection Status for DACC output (MONSTAT_C).
   d. CCSTAT_E, CCSTAT_O.
   e. FIELD2, FIELD1, FIELD0 (least significant bit). The FIELD[2:0] bits indicate the field number that was last encoded. 000 indicates the 1st field.
6. The serial master must issue a STOP condition to finish the Read transaction. An ACK is not necessary before closing the transaction because the CX25870 just ignores the ACK anyway. In reality, the CX25870/871 does not really care about ending a transaction properly as long as a proper START condition is used to start the next transaction. In the read mode when the CX25870 is driving the SDA port, ending the transaction cannot take place until the encoder releases control of the SID line. This happens during the transition from when the last bit of the register is output to the receiving of the ACK.
7. The graphics controller, acting as the serial master, should clear the CHECK_STAT register bit back to 0 (bit D6 of register BA) by writing zero to the CHECK_STAT register bit (bit D6 of register BA) to display standard video again from the CX25870/871 VGA encoder.

To reiterate, a START condition needs to be issued by the serial master to start the next transaction. In the read mode, when the CX25870/871 is driving the SID port, an end to the transaction cannot take place until the encoder releases control of the SID line. This event happens during the transition from when the last bit of the register is output to the receiving of the ACK.

1.3.47 Sleep/Power Management

There are a number of sleep/power down options for the CX25870/871. These options can be grouped into three different categories. The first category pertains to power management during normal operation.

- DIS_PLL bit:
  In nonsleep mode, when an external clock is being used, and the PLL is not needed, this bit will disable the PLL function.
- XTAL_PAD_DIS bit:
  Setting this bit forces the crystal oscillator circuit to completely shut down. This requires the CX25870/871 to switch over to an external clock or the RESET* pin needs to be pulsed low to recover.
- XTL_BFO_DIS bit:
  This disables the crystal buffer when it is not needed.
- DIS_CLKO bit:
  This will disable the CLKO output pin when not needed, i.e., an external clock is used in slave interface or to reduce sleep current.
- DACDISx/DACOFF bits:
  Each individual DAC can be powered down by setting its corresponding DACDISx bit. This is useful only if some of the DACs are not being utilized by the graphics system. The entire analog subsection of the device can be powered-down with the DACOFF bit, allowing digital operations to continue while reducing the power in the analog circuitry. This will achieve a significant reduction in power while maintaining all digital functionality.

The second category pertains to software enabled sleep operation.

- SLEEP_EN bit:
  Shuts down all internal clocks except the serial port interface clock. Disables all digital I/O pins except these: SLEEP, ALTADDR, CLKI, CLKO, and XTAL_OUT. Disables the PLL. Turns off all DACs and VREF; SLEEP and RESET* are never disabled.
- PLL_KEEP_ALIVE bit:
  When the PLL is used to provide a system clock, this bit keeps it functioning if the rest of the chip is slept through either the sleep pin or sleep bit. This bit has no affect if DIS_PLL is set.
- DIS_CLKI bit:
  The disable for the CLKI is separate from the sleep bit and sleep pin to accommodate using an external clock as the clock source for the CX25870/871 or as the PLL input.

The third category relates to the pin driven sleep operation.

- SLEEP pin:
  In addition to what the SLEEP_EN bit does, the sleep pin shuts down the serial port interface and disables the ALTADDR pin. If the SLEEP pin = 1, the only way the encoder can return to normal operation is by resetting the SLEEP pin in 0.

To achieve additional power savings, all the power management options available in normal operation are also available in software or pin driven sleep operation.

For the lowest possible power consumption, set the XTL_BFO_DIS, DIS_CLKO, DIS_CLKI, and XTAL_PAD_DIS bits in order, then pull the SLEEP pin (#52) high.

2.0 Internal Registers

A complete register bit map CX25870/871 is displayed in Table 2-1. All registers are read/write unless denoted otherwise. For bit descriptions and detailed programming information, follow the register bit map below. All registers are set to their default state following a software reset. A software reset is always performed at power-up. After power-up, a reset can be triggered by to writing the SRESET register bit.

Table 2-1. Register Bit Map (* Indicates Read-Only Register) *(1 of 4)*

8-Bit Address	D7	D6	D5	D4	D3	D2	D1	D0
*00	ID[2:0]			VERSION[4:0]				
*02	MONSTAT_A	MONSTAT_B	MONSTAT_C	CCSTAT_E	CCSTAT_0	FIELD_CNT[2:0]		
*04	Reserved	SECAM	PLL_RESET_OUT	PLL_LOCK	FIFO_OVER	FIFO_UNDER	PAL	Reserved
*06	MONSTAT_A	MONSTAT_B	MONSTAT_C	MONSTAT_D	FIELD_CNT[3:0]			
28	SERIALTEST[7:0]							
2E	HDTV_EN	RGB2PRPB	RPR_SYNC_DIS	GY_SYNC_DIS	BPB_SYNC_DIS	HD_SYNC_EDGE	RASTER_SEL[1:0]	
30	SLEEP_EN	XTAL_PAD_DIS	XTL_BFO_DIS	PLL_KEEP_ALIVE	DIS_CLKI	DIS_PLL	DIS_CLKO	Reserved
32	AUTO_CHK	DRVS[1:0]		SETUP_HOLD_ADJ	IN_MODE[3]	DATDLY_RE	OFFSET_RGB	CSC_SEL
34	ADPT_FF	Reserved	Reserved	C_ALTFF[1:0]		Reserved	Y_ALTFF[1:0]	
36	FFRTN	YSELECT	C_THRESH[2:0]			Y_THRESH[2:0]		
38(1)	Reserved	PIX_DOUBLE	PLL_32CLK	DIV2	HBURST_END[8]	HBURST_BEGINS[8]	V_LINESI[10]	H_BLANKI[9]
3A	Reserved	Reserved	Reserved	14318_XTAL	HALF_CLKO	PLL_DIV10	PLL_INPUT	DIV2_LATCH
3C	MCOMPY[7:0]							
3E	MCOMPU[7:0]							
40	MCOMPV[7:0]							
42	MSC_DB[7:0]							
44	MSC_DB[15:8]							
46	MSC_DB[23:16]							
48	MSC_DB[31:24]							

Table 2-1. Register Bit Map (* Indicates Read-Only Register) *(2 of 4)*

8-Bit Address	D7	D6	D5	D4	D3	D2	D1	D0
4A	DR_LIMITP[7:0]							
4C	DR_LIMITN[7:0]							
4E	Reserved	Reserved	DR_LIMITN[10:8]			DR_LIMITP[10:8]		
50	DB_LIMITP[7:0]							
52	DB_LIMITN[7:0]							
54	Reserved	Reserved	DB_LIMITN[10:8]			DB_LIMITP[10:8]		
56	FIL4286INCR[7:0]							
58	Reserved	Reserved	FILFSCONV[5:0]					
5A	Y_OFF[7:0]							
5C	HUE_ADJ[7:0]							
5E	XDSSEL[3:0]				CCSEL[3:0]			
60	EWSSF2	EWSSF1	Reserved	Reserved	WSDAT[4:1]			
62	WSDAT[12:5]							
64	WSDAT[20:13]							
66	WSSINC[7:0]							
68	WSSINC[15:8]							
6A	Reserved	Reserved	Reserved	Reserved	WSSINC[19:16]			
6C	TIMING_ RST	EN_REG_RD	FFCBAR	BLNK_IGNORE	EN_SCART	EACTIVE	FLD_MODE[1:0]	
6E	HSYNOFFSET[7:0]							
70	HSYNOFFSET[9:8]		HSYNWIDTH[5:0]					
72	Reserved							
74	DATDLY	DATSWP	Reserved			VSYNWIDTH[2:0]		
76(1)	H_CLKO[7:0]							
78(1)	H_ACTIVE[7:0]							
7A(1)	HSYNC_WIDTH[7:0]							
7C(1)	HBURST_BEGIN[7:0]							
7E(1)	HBURST_END[7:0]							
80(1)	H_BLANKO[7:0]							
82(1)	V_BLANKO[7:0]							
84(1)	V_ACTIVEO[7:0]							
86(1)	V_ACTIVEO[8]	H_ACTIVE[10:8]			H_CLKO[11:8]			

Table 2-1. Register Bit Map (* Indicates Read-Only Register) *(3 of 4)*

8-Bit Address	D7	D6	D5	D4	D3	D2	D1	D0
88(1)	H_FRACT[7:0]							
8A(1)	H_CLKI[7:0]							
8C(1)	H_BLANKI[7:0]							
8E(1)	Reserved	Reserved	Reserved	VBLANKDLY	H_BLANKI[8]	H_CLKI[10:8]		
90(1)	V_LINESI[7:0]							
92(1)	V_BLANKI[7:0]							
94(1)	V_ACTIVEI[7:0]							
96(1)	CLPF[1:0]		YLPF[1:0]		V_ACTIVEI[9:8]		V_LINESI[9:8]	
98(1)	V_SCALE[7:0]							
9A(1)	H_BLANKO[9:8]		V_SCALE[13:8]					
9C(1)	PLL_FRACT[7:0]							
9E(1)	PLL_FRACT[15:8]							
A0(1)	EN_XCLK	BY_PLL	PLL_INT[5:0]					
A2(1)	FM	ECLIP	PAL_MD	DIS_SCRST	VSYNC_DUR	625LINE	SETUP	NI_OUT
A4(1)	SYNC_AMP[7:0]							
A6(1)	BST_AMP[7:0]							
A8(1)	MCR[7:0]							
AA(1)	MCB[7:0]							
AC(1)	MY[7:0]							
AE(1)	MSC[7:0]							
B0(1)	MSC[15:8]							
B2(1)	MSC[23:16]							
B4(1)	MSC[31:24]							
B6	PHASE_OFF[7:0]							
B8(2)	Reserved	CONFIG[5:3]			Reserved	CONFIG[2:0]		
BA	SRESET	CHECK_STAT	SLAVER	DACOFF	DACDISD	DACDISC	DACDISB	DACDISA
BC	CCF2B1[7:0]							
BE	CCF2B2[7:0]							
C0	CCF1B1[7:0]							
C2	CCF1B2[7:0]							

Table 2-1. Register Bit Map (* Indicates Read-Only Register) *(4 of 4)*

8-Bit Address	D7	D6	D5	D4	D3	D2	D1	D0
C4	ESTATUS[1:0]		ECCF2(EXDS)	ECCF1(ECC)	ECCGATE	ECBAR	DCHROMA	EN_OUT
C6	EN_BLANKO	EN_DOT	FIELDI	VSYNCI	HSYNCI	IN_MODE[2:0]		
C8	DIS_YLPF	DIS_FFILT	F_SELC[2:0]			F_SELY[2:0]		
CA	DIS_GMUSHY	DIS_GMSHY	YCORING[2:0]			YATTENUATE[2:0]		
CC	DIS_GMUSHC	DIS_GMSHC	CCORING[2:0]			CATTENUATE[2:0]		
CE	OUT_MUXD[1:0]		OUT_MUXC[1:0]		OUT_MUXB[1:0]		OUT_MUXA[1:0]	
D0	CCR_START[7:0]							
D2	CC_ADD[7:0]							
D4	MODE2X	DIV2	EN_ASYNC	CCR_START[8]	CC_ADD[11:8]			
D6	CCR_ START[9]	E656	BLANKI	EBLUE	OUT_MODE[1:0]		LUMADLY[1:0]	
D8	CHROMA_ BW	BY_YCCR	PKFIL_SEL[1:0]		FIELD_ID	CVBSD_INV	SC_ PATTERN	PROG_SC

NOTE(S):

(1) Denotes a register that is reprogrammed by the autoconfiguration process.

(2) ***When sequentially writing a new register set to the CX25870/871, make sure to skip register 0xB8***. This is the autoconfiguration register and writing to it will overwrite registers 0x76 through 0xB4 and 0x38 with autoconfiguration values.

2.1 Essential Registers

The power-up state will be either autoconfiguration mode 0 (640 x 480 RGB in NTSC out) or autoconfiguration mode 1 (640 x 480 RGB in, PAL_BDGHI out) depending on the state of the PAL pin. By default, the CX25870/871 will be in master interface. To enable active video, the EACTIVE register bit must be set.

2.2 Device Address

The serial device address for the CX25870/871 is configurable by the state of the ALTADDR pin at reset. Table 2-2 lists how the ALTADDR pin switches the devices serial address. The ALTADDR pins state should only be changed during power-up.

Table 2-2. Serial Address Configuration

ALTADDR State	Device Address for Writing	Device Address for Reading
0	0x88	0x89
1	0x8A	0x8B

2.3 Writing Registers

Following a start condition, writing 0x88 as the device ID initiates write access to the CX25870/871 registers when the ALTADDR pin is low. Alternative device ID 0x8A initiates write access when the ALTADDR pin is high. If the data is written sequentially in subaddress order, only the first subaddress needs to be written; the internal address counter will automatically increment after each write to the next register.

When writing an entirely new register set to the CX25870/871, make sure to skip register 0xB8. This is the autoconfiguration register, and writing any value to it after having loaded values into other registers will replace desired data with unwanted data.

2.4 Reading Registers

Following a start condition, writing 0x89 and then the desired subaddress initiates the read-back sequence. The next eight bits of information, returned by the CX25870/871, can be read from the SID pin, most significant bit first. Alternative address 0x8B is required if the ALTADDR pin is high. Registers 0x00 through 0x06 are read only. All other registers can be read from or written to.

The ID[2:0] bits of register 0x00 indicate the part type (CX25870/871 or Bt868/869). The lower five bits (VERSION[4:0]) indicate the version number of that particular encoder.

For software detection of a connected TV monitor on each DAC output, the MONSTAT_x bits (found in 0x06 and 0x02 for legacy purposes) should be read accordingly after writing to CHECK_STAT. For a description of this process follow the guidelines contained in the Section 1.3.46.

To check the status of the monitor connections at the DAC output automatically once per frame during the vertical blanking interval, set the AUTO_CHK bit.

The following pseudocode sample should be used for properly reading registers within the CX25870/871.

First, there are some basic action assignments:

S_ACK	The slave device generates the acknowledge (i.e., the CX25870/871)
M_ACK	The serial master generates the acknowledge.
NACK	No acknowledge is generated by either device.
START	Serial start condition; falling edge of SID occurs when SIC is high.
STOP	Serial stop condition; rising edge of SID occurs when SIC is high.
D_ADDR	The device address is 88 hex with ALTADDR = 0, 8A when it is a 1.

- Next, load 46 hex into register 6C. This will write the EN_REG_RD bit to 1. This enables the serial master to read back all encoder registers.

Perform the following transaction with the serial master:

– START/D_ADDR/S_ACK/6C/S_ACK/46/S_ACK/STOP

- Next, use the serial master to write the register address from which read-back will occur:

– START/D_ADDR/S_ACK/<read_address>/S_ACK/STOP

Finally, read the data starting at the read_address previously issued:

– START/D_ADDR+1/S_ACK/<readdata(0)>/M_ACK/<readdata(1)>/M_ACK/
<readdata(2)>/M_ACK/.../.../<readdata(n-1)>/M_ACK/<readdata(n)>/
NACK/STOP

where:

readdata(0) is the data from CX25870/871 register <read_address>
readdata(1) is the data from CX25870/871 register <read_address>+1
readdata(2) is the data from CX25870/871 register <read_address>+2

As long as the CX25870/871 detects an acknowledge from the serial master (M_ACK) after providing the readdata, it will expect the read transaction to continue.

When no acknowledge is received, the encoder will end the read operation. Using this approach, consecutive register reads can be provided with less software overhead.

To read just one register location, every programming step remains the same up to the point where the read data transaction occurs.

In this case, the master should simply substitute a STOP in place of the M_ACK. The final step of the transaction will therefore be:

- START/8B/S_ACK/<readdata>/NACK/STOP

Table 2-3 contains the bitmap for the encoder's read-only registers. Table 2-4 contains the data details for these registers. As mentioned previously, to enable full register read back, the EN_REG_RD bit must be set to 1.

Table 2-3. Bit Map for Read-Only Registers

Register Address	7	6	5	4	3	2	1	0
00	ID[2:0]			VERSION[4:0]				
02	MONSTAT_A	MONSTAT_B	MONSTAT_C	CCSTAT_E	CCSTAT_O	FIELD_CNT[2:0]		
04	Reserved	SECAM	PLL_RESET_ OUT	PLL_LOCK	FIFO_OVER	FIFO_ UNDER	PAL	Reserved
06	MONSTAT_A	MONSTAT_B	MONSTAT_C	MONSTAT_D	FIELD_CNT[3:0]			

Table 2-4. Data Details Defined for Read-Only Registers

Bit Names	Data Definition
ID[2:0]	Indicates the part number of the Conexant VGA Encoder: 000 is returned from the Bt868, 001 is returned from the Bt869, 010 is returned from the CX25870, and 011 is returned from the CX25871.
VERSION[4:0]	Version number; for Revision A of the CX25870/871, these bits are all 00000. Revision C (25870/871-13) is denoted by 00001 of the CX25870/871. Revision D (25870/871-14) is denoted by 00010 of the CX25870/871. Revision E (25870/871-15) is denoted by 00011 of the CX25870/871.
MONSTAT_A	Monitor connection status for DACA output, 1 denotes monitor connected to DACA.
MONSTAT_B	Monitor connection status for DACB output, 1 denotes monitor connected to DACB.
MONSTAT_C	Monitor connection status for DACC output, 1 denotes monitor connected to DACC.
MONSTAT_D	Monitor connection status for DACD output, 1 denotes monitor connected to DACD.
CCSTAT_E	High if closed-caption data has been written for the even field; it is low immediately after the clock run-in on the extended service line for the even field.
CCSTAT_O	High if closed-caption data has been written for the odd field; it is low immediately after the clock run-in on the closed caption line for the odd field.
FIELD_CNT[3:0]	Field number, where 0000 indicates the first field, 1111 indicates the 15th field. An extra bit was added to accommodate the SECAM standard.
SECAM	Indicates status of SECAM mode. If the encoder is outputting SECAM, this bit will be set to 1.
PLL_RESET_OUT	PLL reset state.
PLL_LOCK	High when PLL is locked. Will be low if PLL loses lock.
FIFO_OVER	Set to one if FIFO overflows. Reset on read.
FIFO_UNDER	Set to one if FIFO underflows. Reset on read.
PAL	Indicates status of PAL mode. If the encoder is outputting PAL, this bit will be set to 1. If the encoder is transmitting NTSC, this bit is set to 0.

Table 2-5 contains the data details for the CX25870/871 read/write registers.

Table 2-5. Programming Detail For All Read/Write Registers *(1 of 16)*

Bit/Register Names	Bit Location	Bit/Register Definition
14318_XTAL	Bit 4–3A	0 = 13.500 crystal operation. (DEFAULT) 1 = 14.318 MHz crystal operation. Adjusts autoconfiguration register values for the alternative crystal frequency.
625LINE	Bit 2–A2	The default state of this bit will be 1 if the PAL pin is 1. 0 = 525-line format (NTSC-M, NTSC-J, PAL-M). 1 = 625-line format (PAL-BDGHI, PAL-N, PAL-Nc, SECAM).
ADPT_FF	Bit 7–34	0 = Disable adaptive flicker filter. (DEFAULT) 1 = Enable adaptive flicker filter.
AUTO_CHK	Bit 7–32	0 = Normal operation. (DEFAULT) 1 = The status of the monitor connections will be automatically checked once per frame during the VBI (vertical blanking interval).
BLANKI	Bit 5–D6	0 = Active low BLANK* pin. (DEFAULT) 1 = Active high BLANK* pin.
BLNK_IGNORE	Bit 4–6C	0 = Use BLANK* pin to indicate the active pixel region in CCIR 656 mode. (DEFAULT) 1 = Use registers H_BLANKI & V_BLANKI to determine the active pixel region in CCIR 656 mode.
BPB_SYNC_DIS	Bit 3–2E	This bit is only effective when OUT_MODE[1:0] = 11, HDTV_EN = 1, and RASTER_SEL is nonzero. 0 = Enables trilevel sync on HDTV Blue or P_B output. (DEFAULT) 1 = Disables trilevel sync on HDTV Blue or P_B output. This bit will have to be set manually for EIA-770.3 compliance.
BST_AMP[7:0]	Bits[7:0]–A6	Color burst amplitude factor. Each bit adjustment represents 1.25 mV of burst amplitude.
BY_PLL	Bit 6–A0	0 = Use on chip PLL (DEFAULT) 1 = Bypass PLL (encoder clock is crystal frequency).
BY_YCCR	Bit 6–D8	0 = Normal operation (DEFAULT) 1 = Bypass luma cross color reduction filter. Optimal standard definition quality most often realized with this setting.
C_ALTFF[1:0]	Bits [4:3]–34	Chroma alternate flicker filter selection. This bit will only have an effect when ADPT_FF is set. C_ALTFF should always be programmed to a value greater than or equal to F_SELC. 00 = 5 line (DEFAULT) 01 = 2 line 10 = 3 line 11 = 4 line
C_THRESH[2:0]	Bits [5:3]–36	Controls the sensitivity or limit of turning on the alternate flicker filter for chroma in adaptive mode. (DEFAULT = 000)

***Table 2-5. Programming Detail For All Read/Write Registers** (2 of 16)*

Bit/Register Names	Bit Location	Bit/Register Definition
CATTENUATE[2:0]	Bits [2:0]–CC	Chroma Attenuation. Used for saturation control. 000 = 1.0 gain No Attenuation (DEFAULT) 001 = 15/16 gain 010 = 7/8 gain 011 = 3/4 gain 100 = 1/2 gain 101 = 1/4 gain 110 = 1/8 gain 111 = 0 gain (Force Chroma to 0)
CC_ADD[11:0]	Bits [3:0]–D4 and bits [7:0]–D2	Closed-captioning DTO increment.
CCF1B1[7:0]	Bits [7:0]–C0	This is the first byte of closed-caption information for the odd field, line 21 for NTSC or line 22 for PAL. Data is encoded LSB first.
CCF1B2[7:0]	Bits [7:0]–C2	This is the second byte of closed-caption information for the odd field, line 21 for NTSC or line 22 for PAL. Data is encoded LSB first.
CCF2B1[7:0]	Bits [7:0]–BC	This is the first byte of closed-caption information for the even field, line 284 for NTSC or line 335 for PAL. Data is encoded LSB first.
CCF2B2[7:0]	Bits [7:0]–BE	This is the second byte of closed-caption information for the even field, line 284 for NTSC or line 335 for PAL. Data is encoded LSB first.
CCORING[2:0]	Bits [5:3]–CC	Chroma Coring. Values below the CCORING[2:0] limit are automatically clamped to a saturation value of 0. 000 = Bypass (DEFAULT) 001 = 1/128 of range (± 1/256 of range) 010 = 1/64 of range (± 1/128 of range) 011 = 1/32 of range (± 1/64 of range) 100 = 1/16 of range (± 1/32 of range) 101 = 1/8 of range (± 1/16 of range) 110 = 1/4 of range (± 1/8 of range) 111 = Reserved
CCR_START[9] CCR_START[8] CCR_START[7:0]	Bit 7 of D6, bit 4 of D4, and bits [7:0] of D0	Closed-captioning clock run-in start in clock cycles from leading edge of HSYNC*.
CCSEL[3:0]	Bits [3:0]–5E	Line position of Closed Captioning (CC) Content. Controls which line Closed Captioning (CC) data is encoded. Each line enable is independent. 0001 = Closed Captioning (CC) on line 19 (525-line) and line 21 (625-line) 0010 = Closed Captioning (CC) on line 20 (525-line) and line 22 (625-line) 0100 = Closed Captioning (CC) on line 21 (525-line) and line 23 (625-line) (DEFAULT) 1000 = Closed Captioning (CC) on line 22 (525-line) and line 24 (625-line)
CHECK_STAT	Bit 6–BA	Writing a 1 to this bit checks the status of the monitor connections at the DAC output. This is also automatically performed on any reset condition, including a software reset. This bit must be cleared by the serial interface master.
CHROMA_BW	Bit7–D8	0 = Normal chroma bandwidth. See Figure 1-28 (DEFAULT). 1 = Wide chroma bandwidth. See Figure 1-29.

Table 2-5. Programming Detail For All Read/Write Registers *(3 of 16)*

Bit/Register Names	Bit Location	Bit/Register Definition
CLPF[1:0]	Bits [7:6]–96	Chroma Post-Flicker Filter/Scaler Horizontal Low Pass Filter: 00 = Bypass (DEFAULT) 01 = Reserved 10 = Chroma Horizontal LPF2 setting 11 = Chroma Horizontal LPF3 setting

Table 2-5. Programming Detail For All Read/Write Registers *(4 of 16)*

Bit/Register Names	Bit Location	Bit/Register Definition
CONFIG[5:0]	Bits [6:4] and bits [2:0]–B8	The combination of CONFIG[5:3] and CONFIG[2:0] determines the autoconfiguration mode entered by the CX25870/871 immediately after register 0xB8 is written. Check Appendix C for a list of all register values by autoconfiguration mode.

CONFIG [5:0]	Input Format	Active Resolution	Output	Output Ratio	Mode
000000	= RGB	640x480	NTSC	Overscan = Lower	Mode 0
000001	= RGB	640x480	PAL-BDGHI	Overscan = Standard	Mode 1
000010	= RGB	800x600	NTSC	Overscan = Alternate	Mode 2
000011	= RGB	800x600	PAL-BDGHI	Overscan = Lower	Mode 3
000100	= YCrCb	640x480	NTSC	Overscan = Lower	Mode 4
000101	= YCrCb	640x480	PAL-BDGHI	Overscan = Standard	Mode 5
000110	= YCrCb	800x600	NTSC	Overscan = Alternate	Mode 6
000111	= YCrCb	800x600	PAL-BDGHI	Overscan = Lower	Mode 7
001000	= RGB	640x400	NTSC	Overscan = Standard	Mode 8
001001	= RGB	640x400	PAL-BDGHI	Overscan = Standard	Mode 9
001010	= RGB	1024x768	NTSC	Overscan = Standard	Mode 10
001011	= RGB	1024x768	PAL-BDGHI	Overscan = Standard	Mode 11
001100	= RGB	320x240	NTSC	Pix Double Set = Standard	Mode 12
001101	= RGB	320x240	PAL-BDGHI	Pix Double Set = Standard	Mode 13
001110	= YCrCb	1024x768	NTSC	Overscan = Higher	Mode 14
001111	= YCrCb	1024x768	PAL-BDGHI	Overscan = Higher	Mode 15
010000	= Reserved				Mode 16
010001	= RGB	640x480	PAL-BDGHI	Overscan = Lower	Mode 17
010010	= RGB	800x600	NTSC	Overscan = Lower	Mode 18
010011	= RGB	800x600	PAL-BDGHI	Overscan = Standard	Mode 19
010100	= Reserved				Mode 20
010101	= YCrCb	640x480	PAL-BDGHI	Overscan = Lower	Mode 21
010110	= YCrCb	800x600	NTSC	Overscan = Lower	Mode 22
010111	= YCrCb	800x600	PAL-BDGHI	Overscan = Standard	Mode 23
011000	= RGB	720x400	NTSC	9-dot font for DOS Overscan =Standard	Mode 24
011001	= RGB	720x400	PAL-BDGHI	9-dot font for DOS Overscan =Standard	Mode 25
011010	= RGB	1024x768	NTSC	Overscan = Lower	Mode 26
011011	= Reserved				Mode 27
011100	= YCrCb	720x480	NTSC	Interlaced Input, Slave Interface Overscan = 0% DIV2 set	Mode 28

Table 2-5. Programming Detail For All Read/Write Registers *(5 of 16)*

Bit/Register Names	Bit Location	Bit/Register Definition
		011101 =YCrCb 720x576 PAL-BDGHI Interlaced Input, Slave Interface Overscan = 0% DIV2 set Mode 29 011110 = YCrCb 1024x768 NTSC Overscan = Lower Mode 30 011111 = Reserved Mode 31 100000 = RGB 640x480 NTSC Overscan = Higher Mode 32 100001 = RGB 640x480 PAL-BDGHI Overscan = Higher Mode 33 100010 = RGB 800x600 NTSC Overscan = Higher Mode 34 100011 = RGB 800x600 PAL-BDGHI Overscan = Higher Mode 35 100100 = YCrCb 640x480 NTSC Overscan = Higher Mode 36 100101 = YCrCb 640x480 PAL-BDGHI Overscan = Higher Mode 37 100110 = YCrCb 800x600 NTSC Overscan = Higher Mode 38 100111 = YCrCb 800x600 PAL-BDGHI Overscan = Higher Mode 39 101000 = RGB 800x600 NTSC Overscan = Standard Mode 40 101001 = RGB 320x200 PAL-BDGHI Pix Double Set Overscan = Standard Mode 41 101010 = RGB 1024x768 NTSC Overscan = Higher Mode 42 101011 = RGB 1024x768 PAL-BDGHI Overscan = Higher Mode 43 101100 = RGB 720x480 NTSC Noninterlaced Input for DVD Overscan = Very Low Mode 44 101101 = RGB 320x200 NTSC Pix Double Set Overscan = Standard Mode 45 101110 = RGB 640x480 PAL-M (Brazil) Overscan = Standard Mode 46 101111 = RGB 640x480 PAL-Nc (Argentina) Overscan = Standard Mode 47
CSC_SEL	Bit 0–32	This bit is only effective when OUT_MODE[1:0] = 11, HDTV_EN = 1, and RASTER_SEL is nonzero. 0 = Standard color space conversion for RGB to Y (R-Y) (B-Y) based on Y =0 .299R +0 .587G +0 .114 B (DEFAULT) 1 = HDTV color space conversion for RGB to Y (R-Y) (B-Y) based on Y = 0.2126R + 0.7152G + 0.0722B
CVBSD_INV	Bit 2–D8	0 = Normal operation. (DEFAULT) 1 = Invert CVBS_DLY output.
DACDISA	Bit 0–BA	No more than 1 DAC should be disabled at any time. 0 = Normal operation. (DEFAULT) 1 = Disables DACA output. Current is set to 0 mA; output will go to 0 V.
DACDISB	Bit 1–BA	No more than 1 DAC should be disabled at any time. 0 = Normal operation. (DEFAULT) 1 = Disables DACB output. Current is set to 0 mA; output will go to 0 V.

***Table 2-5. Programming Detail For All Read/Write Registers** (6 of 16)*

Bit/Register Names	Bit Location	Bit/Register Definition
DACDISC	Bit 2–BA	No more than 1 DAC should be disabled at any time. 0 = Normal operation. (DEFAULT) 1 = Disables DACC output. Current is set to 0 mA; output will go to 0 V.
DACDISD	Bit 3–BA	No more than 1 DAC should be disabled at any time. 0 = Normal Operation. (DEFAULT) 1 = Disables DACD output. Current is set to 0 mA; output will go to 0 V.
DACOFF	Bit 4–BA	0 = Normal operation. (DEFAULT) 1 = Disables DAC output current and internal voltage reference for all DACs. This will limit power consumption to just the internal digital circuitry.
DATDLY	Bit 7–74	0 = No delay in falling edge pixel data. (DEFAULT) 1 = Delays the falling edge pixel data by 1 full clock period. This bit is used to correct a multiplexed input data sequence that delivers a pixel on a falling edge and the following rising edge (rather than a rising edge and the following falling edge, as expected).
DATDLY_RE	Bit 2–32	0 = No delay in rising edge pixel data. (DEFAULT) 1 = Delays the rising edge pixel data by 1 full clock period. This bit is used together with DATSWP to correct a multiplexed input data sequence that delivers a pixel on a falling edge and the following rising edge with the falling edge and rising edge data swapped.
DATSWP	Bit 6–74	0 = VGA Encoder expects an order of rising edge data/falling edge data coming from the graphics controller (DEFAULT). 1 = Swaps the falling edge pixel data with the rising edge pixel data at the input of the pixel port.
DB_LIMITN[10:8} DB_LIMITN[7:0]	Bits [5:3]–54 and bits [7:0]–52	Lower bound limit for DB frequency deviation in SECAM. Review SECAM Output Section.
DB_LIMITP[10:8} DB_LIMITP[7:0]	Bits [2:0]–54 and bits [7:0]–50	Upper bound limit for DB frequency deviation in SECAM. Review SECAM Output Section.
DCHROMA	Bit 1–C4	0 = Normal operation. (DEFAULT) 1 = Disable the chrominance portion of video output. Composite and S-Video outputs appear as gray scale.
DIS_CLKI	Bit 3–30	0 = Normal operation. (DEFAULT) 1 = Disable CLKI input. Disabling the CLKI input is separate from the sleep bit and SLEEP pin. This forces the CX25870/871 to use an external clock as the clock source for the CX25870/871 or as the PLL input.
DIS_CLKO	Bit 1–30	0 = Enable CLKO output. (DEFAULT) 1 = Three-state CLKO output. This will disable the CLKO output when not needed, i.e., an external clock is used (Slave Interface). Disabling CLKO is also effective in reducing the current draw in SLEEP mode.
DIS_FFILT	Bit 6–C8	0 = Enables Standard Flicker Filter. (DEFAULT) 1 = Disables Standard Flicker Filter.
DIS_GMSHC	Bit 6–CC	0 = Enables Chroma Pseudo Gamma Removal. 1 = Disables Chroma Pseudo Gamma Removal. (DEFAULT)
DIS_GMSHY	Bit 6–CA	0 = Enables Luma Pseudo Gamma Removal. 1 = Disables Luma Pseudo Gamma Removal. (DEFAULT)
DIS_GMUSHC	Bit 7–CC	0 = Enables Chroma Anti-Pseudo Gamma Removal. 1 = Disables Chroma Anti-Pseudo Gamma Removal. (DEFAULT)

Table 2-5. Programming Detail For All Read/Write Registers *(7 of 16)*

Bit/Register Names	Bit Location	Bit/Register Definition
DIS_GMUSHY	Bit 7–CA	0 = Enables Luma Anti-Pseudo Gamma Removal. 1 = Disables Luma Anti-Pseudo Gamma Removal. (DEFAULT)
DIS_PLL	Bit 2–30	0 = PLL enable. (DEFAULT) 1 = PLL disable. In nonsleep mode, if an external clock is being used and the PLL is not needed, this bit will disable the PLL function. ***NOTE(S):*** Some of the special modes are not available when the PLL is disabled.
DIS_SCRST	Bit 4–A2	0 = Normal operation. The subcarrier phase is reset to 0 at the beginning of each color field sequence. (DEFAULT) 1 = Disables subcarrier reset event at beginning of field sequence.
DIS_YLPF	Bit 7–C8	0 = Enable Luma Initial Horizontal Low Pass filter. (DEFAULT) 1 = Disable Luma Initial Horizontal Low Pass filter.
DIV2	Bit 6–D4 and bit 4–38	0 = Normal operation. (DEFAULT) 1 = Divides input pixel rate by two (for CCIR601 interlaced timing input). Useful for DVD playback resolutions. The DIV2 bit in register D4 was kept for Bt868/869 compatibility purposes. The DIV2 bit in register 38 is autoconfigurable. These bit values always mirror each other. Changing the state of one DIV2 register field automatically updates the other DIV2 register field.
DIV2_LATCH	Bit 0–3A	This bit only has an effect when DIV2 = 1. 0 = Data is clocked at rising edge of CLKI while encoder is in DIV2 mode. (DEFAULT) 1 = Data is clocked at rising and falling edges of CLKI.
DR_LIMITN[10:8} DR_LIMITN[7:0]	Bits [5:3]–4E and bits [7:0]–4C	Lower bound limit for DR frequency deviation in SECAM. Review SECAM Output Section.
DR_LIMITP[10:8} DR_LIMITP[7:0]	Bits [2:0]–4E and bits [7:0]–4A	Upper bound limit for DR frequency deviation in SECAM. Review SECAM Output Section.
DRVS[1:0]	Bits [6:5]–32	Controls the low voltage pad drive strength. Review Low Voltage Graphics Interface section. 00 = 3.3 V peak-to-peak signal levels (DEFAULT) 01 = 1.8 V peak-to-peak signal levels 10 = 1.5 V and 1.3 V peak-to-peak signal levels 11 = 1.1 V peak-to-peak signal levels
E656	Bit 6–D6	0 = Input pixel format defined by IN_MODE[3:0] register. (DEFAULT) 1 = CCIR 656 input on P[7:0] port.
EACTIVE	Bit 2–6C	0 = Black burst. 1 = Enable normal video. (DEFAULT)
EBLUE	Bit 4–D6	0 = Normal operation. (DEFAULT) 1 = Generate blue field.
ECBAR	Bit 2–C4	0 = Normal operation. (DEFAULT) 1 = Enable standard color bars.
ECCF1(ECC)	Bit 4–C4	0 = Disables closed-caption encoding on field 1. (DEFAULT) 1 = Enables closed-caption encoding on field 1.
ECCF2(EXDS)	Bit 5–C4	0 = Disables closed-caption encoding on field 2. (DEFAULT) 1 = Enables closed-caption encoding on field 2.

***Table 2-5. Programming Detail For All Read/Write Registers** (8 of 16)*

Bit/Register Names	Bit Location	Bit/Register Definition
ECCGATE	Bit 3–C4	0 = Normal closed-caption encoding. (DEFAULT) 1 = Enables closed-caption encoding constraints. After encoding, future encoding is disabled until a complete pair of new data bytes is received. This prevents encoding of redundant or incomplete data.
ECLIP	Bit 6–A2	0 = Normal operation. (DEFAULT) 1 = Enable clipping; DAC values less than 31 hex are made 31 by the encoder.
EN_ASYNC	Bit 5–D4	0 = Normal operation. (DEFAULT) 1 = Enable asynchronous flicker filer and encoder block timing operation. Use CLKI for flicker filter and input blocks and PLL for encoder block. Allows for additional clock ratios between flicker filter and encoder blocks to provide more overscan solutions similar to the 3:2 clocking mode.
EN_BLANKO	Bit 7–C6	Interface bit: Works in conjunction with EN_DOT, EN_OUT, and SLAVER. Controls direction of BLANK* signal. 0 = Enables BLANK* as an input. 1 = Enables BLANK* pin as an output, or no BLANK* signal is utilized in the system interface. (DEFAULT)
EN_DOT	Bit 6–C6	Interface bit: Works in conjunction with EN_BLANKO, EN_OUT, and SLAVER. Controls blanking method. 0 = Encoder uses its internal counters to determine the active-versus-blanked regions of input data. (DEFAULT) 1 = Encoder uses the BLANK* signal being received to determine where active video starts (rising edge by default) and where blanking region starts (falling edge by default).
EN_OUT	Bit 0–C4	Interface bit: Works in conjunction with EN_BLANKO, EN_DOT, and SLAVER. Turns timing outputs on or off. 0 = Three-state (CLKO, HSYNC*, VSYNC*, BLANK* and FIELD) timing outputs. (DEFAULT) 1 = Allows CLKO and other outputs to be enabled (depending upon EN_BLANKO register bit and the OR combination of the SLAVE pin and the SLAVER bit).
EN_REG_RD	Bit 6–6C	0 = Use ESTATUS[1:0] register to select read back status registers. Enable Bt869-like Legacy read-back method. (DEFAULT) 1 = Enable Standard serial register read back of all registers.
EN_SCART	Bit 3–6C	Enables SCART video output for Europe. OUT_MODE[1:0] field must be set to 11 (VGA Mode) and HDTV_EN bit must be set to 0. 0 = Enables VGA mode. DACs will output analog RGB with standard bilevel (-40 IRE) analog syncs (DEFAULT). 1 = Enables SCART output mode. DAC will transmit SCART compatible RGB outputs and a composite video output which includes an analog sync.
EN_XCLK	Bit 7–A0	0 = Encoder generates pixel clock. (DEFAULT) 1 = Use CLKI pin as pixel clock source. This bit must be set for slave interface.
ESTATUS[1:0]	Bits [7:6]–C4	Bt868/869 Legacy serial read back status bit selection. Used in conjunction with EN_REG_RD, CHECK_STAT, and AUTO_CHK. Review Table 1-30.
EWSSF1	Bit 6–60	0 = Disable field 1 WSS data. (DEFAULT) 1 = Enable field 1 WSS data.
EWSSF2	Bit 7–60	0 = Disable field 2 WSS data. (DEFAULT) 1 = Enable field 2 WSS data (525 line only).

Table 2-5. Programming Detail For All Read/Write Registers *(9 of 16)*

Bit/Register Names	Bit Location	Bit/Register Definition
F_SELC[2:0]	Bits [5:3]–C8	Chroma Standard Flicker Filter: 000 = 5 Line (DEFAULT) 001 = 2 Line 010 = 3 Line 011 = 4 Line 100 = Alternate 5 Line 101 = Alternate 5 Line 110 = Alternate 5 Line 111 = Alternate 5 Line
F_SELY[2:0]	Bits [2:0]–C8	Luma Standard Flicker Filter: 000 = 5 Line (DEFAULT) 001 = 2 Line 010 = 3 Line 011 = 4 Line 100 = Alternate 5 Line 101 = Alternate 5 Line 110 = Alternate 5 Line 111 = Alternate 5 Line
FFCBAR	Bit 5–6C	0 = Normal operation. (DEFAULT) 1 = Enable flicker filtered color bars.
FFRTN	Bit 7–36	Alternate flicker filter detect and select. This bit is effective only when ADPT_FF = 1. 0 = Once the adaptive algorithm selects the alternate filter, use that filter's coefficients for the rest of the samples for that line. For example, the sequence could be STD/STD/ALT/ALT/ALT; (DEFAULT) 1 = Once the adaptive algorithm selects the alternate filter, use the filter's coefficients for that sample only. For example, the sequence with FFRTN=1 could be STD/STD/ALT/STD/STD.
FIELD_ID	Bit 3–D8	0 = Suppress the SECAM field synchronization signal. (DEFAULT) 1 = Enable the SECAM field synchronization signal (bottle-neck pulses).
FIELDI	Bit 5–C6	0 = Logical 1 from the FIELD pin indicates an even field. (DEFAULT) 1 = Logical 1 from the FIELD pin indicates an odd field.
FILFSCONV[5:0]	Bits [5:0]–58	Adjust SECAM high frequency preemphasis filter according to the clock frequency. Review the SECAM Output section for the correct equations.
FIL4286INCR[7:0]	Bits [7:0]–56	Adds a phase offset to the UV digital components. Review the SECAM Output section for the correct equations.
FLD_MODE[1:0]	Bits [1:0]–6C	CX25870/871 uses this bit to interpret HSYNC* and VSYNC* edges and field detection in slave mode. 00 = A leading edge of VSYNC* that occurs within ±1/4 of HCLKI from the leading edge of HSYNC* indicates the beginning of odd field. A leading edge of VSYNC* that occurs within ±1/4 of HCLKI from the center of the line indicates the beginning of even field. 01 = A leading edge of VSYNC* occurs during HSYNC* active indicates the beginning of odd field. A leading edge of VSYNC* occurs during HSYNC* inactive indicates the beginning of even field. 10 = A leading edge of VSYNC* coincides with the leading edge of HSYNC* indicates the beginning of odd field. A leading edge of VSYNC* does not coincide with the leading edge of HSYNC* indicated the beginning of even field. (DEFAULT) 11 = Reserved.

Table 2-5. Programming Detail For All Read/Write Registers *(10 of 16)*

Bit/Register Names	Bit Location	Bit/Register Definition
FM	Bit 7–A2	This bit must be enabled for a valid SECAM video output. 0 = QAM color encoding (NTSC/PAL). (DEFAULT) 1 = FM color encoding (SECAM).
GY_SYNC_DIS	Bit 4–2E	This bit is only effective when OUT_MODE[1:0] = 11, HDTV_EN = 1, and RASTER_SEL is nonzero. 0 = Enables trilevel sync on HDTV Green or Y output. (DEFAULT) 1 = Disables trilevel sync on HDTV Green or Y output.
H_ACTIVE[10:8] H_ACTIVE[7:0]	Bits [6:4]–86 and bits [7:0]–78	Number of active input and output pixels.
H_BLANKI[9] H_BLANKI[8] H_BLANKI[7:0]	Bit 0–38, bit 3–8E, and bits[7:0]–8C	Number of CLKI clock cycles between the digital HSYNC* leading edge and first active pixel.
H_BLANKO[9:8] H_BLANKO[7:0]	Bits [7:6]–9A and bits [7:0]–80	Number of CLKO clock cycles between leading edge of analog horizontal sync and active video.
H_CLKI[10:8] H_CLKI[7:0]	Bits [2:0]–8E and bits [7:0]–8A	Number of CLKI clock cycles between consecutive leading edges of the digital HSYNC* signal.
H_CLKO[11:8] H_CLKO[7:0]	Bits [3:0]–86 and bits [7:0]–76	Number of CLKO clock cycles per analog line.
H_FRACT[7:0]	Bits [7:0]–88	Fractional number of input clocks per line. No effect if 00.
HALF_CLKO	Bit 3–3A	0 = Normal operation. (DEFAULT) 1 = CLKO (clock output) frequency divided by 2 while being transmitted.
HBURST_BEGIN[8] HBURST_BEGIN [7:0]	Bit2–38 and bits [7:0]–7C	This register contains the number of CLKO clock cycles between the analog horizontal sync falling edge and the 50% point of the first colorburst cycle.
HBURST_END[8] HBURST_END[7:0]	Bit 3–38 and bits [7:0]–7E	This register contains the number of CLKO clock cycles minus 128 between the analog horizontal sync falling edge and the 50% point of the last colorburst cycle. Make sure to subtract 128 CLKO clock cycles from the calculated 50% point of the last colorburst cycle value and load into this register.
HD_SYNC_EDGE	Bit 2–2E	This bit is only effective when OUT_MODE[1:0] = 11, HDTV_EN = 1 and RASTER_SEL is nonzero. 0 = Trilevel sync edges transition time is equal to 4 input clocks. (DEFAULT) 1 = Trilevel sync edges transition time is equal to 2 input clocks.
HDTV_EN	Bit 7–28	Enable HDTV output mode, OUT_MODE[1:0] register bits must be set to 11 (VGA mode) and EN_SCART must = 0. 0 = Enables VGA mode. DACs will output analog RGB with standard bilevel (-40 IRE) analog syncs. (DEFAULT) See Section 1.3.45 for details. 1 = Enables HDTV output mode. DACs will output HDTV compatible RGB or component video (Y/ P_R/ P_B) outputs. Trilevel syncs and vertical synchronizing/broad pulses will be inserted automatically if RASTER_SEL[1:0] = nonzero. ***NOTE(S):*** The EN_SCART bit must be 0 for HDTV Output Mode to be functional.
HSYNC_WIDTH [7:0]	Bits [7:0]–7A	Analog horizontal sync width in number of CLKO clock cycles.

Table 2-5. Programming Detail For All Read/Write Registers *(11 of 16)*

Bit/Register Names	Bit Location	Bit/Register Definition
HSYNCI	Bit 3–C6	0 = Configures the encoder to send/receive an active low HSYNC* digital signal (DEFAULT) 1 = Configures the encoder to send/receive an active high HSYNC* digital signal.
HSYNOFFSET[9:8] HSYNOFFSET[7:0]	Bits [7:6]–70 and bits [7:0]–6E	A 2s-complement number. The values range from –512 pixels to +511 pixels. This register manipulates the falling edge position of the digital HSYNC* output from the CX25870/871. The default value is 0 and denotes the standard position of the HSYNC* leading edge. This register is only effective in master interface.
HSYNWIDTH[5:0]	Bits [5:0]–70	Controls the duration/width of the digital HSYNC output pulse. Value will be hexadecimal and its units are in terms of pixels. A value of 0 is a disallowed condition. The acceptable range is 0x02 pixels to 0x3F pixels (=63 decimal). The default value is 0x02. Never set to 0. This register is only effective in master interface.
HUE_ADJ[7:0]	Bits [7:0]–5C	Adjust the color subcarrier phase during the video active region. Increasing this value by 1 unit has the effect of increasing the phase by (360/256) = 1.406 degrees.
IN_MODE[3] and IN_MODE[2:0]	Bit 3–32 and bits [2:0]–C6	This bit is used in conjunction with IN_MODE[2:0] to configure the encoder to receive a desired input pixel format. Format of input pixels when IN_MODE[3] = 0 (MSb of this 4-bit sequence): 0000 = 24-bit RGB multiplexed 0001 = 16-bit RGB multiplexed 0010 = 15-bit RGB multiplexed 0011 = 24-bit RGB nonmultiplexed 0100 = 24-bit YCrCb multiplexed 0101 = 16-bit YCrCb multiplexed 0110 = Alternate 16-bit YCrCb multiplexed 0111 = 24-bit YCrCb nonmultiplexed Format of input pixels when IN_MODE[3] = 1(MSb of this 4-bit sequence): 1000 = Alternate 24-bit RGB multiplexed 1001 = Reserved 1010 = Alternate 16-bit RGB nonmultiplexed 1011 = Alternate 24-bit RGB nonmultiplexed 1100 = Alternate 24-bit YCrCb multiplexed 1101 = Reserved 1110 = Alternate 16-bit YCrCb nonmultiplexed 1111 = Alternate 24-bit YCrCb nonmultiplexed
LUMADLY[1:0]	Bits [1:0]–D6	Used to program the luminance delay in pixels for the CVBS_DLY and Y_DLY output modes. 00 = No delay (DEFAULT) 01 = 1 pixel 10 = 2 pixels 11 = 3 pixels
MCB[7:0]	Bits [7:0]–AA	Multiplication factor for Cb (or B-Y) component prior to subcarrier modulation.
MCOMPU[7:0]	Bits [7:0]–3E	Multiplication factor for component video U output. Value 0x80 (DEFAULT) represents 1.0 scale factor.
MCOMPV[7:0]	Bits [7:0]–40	Multiplication factor for component video V output. Value 0x80 (DEFAULT) represents 1.0 scale factor.
MCOMPY[7:0]	Bits [7:0]–3C	Multiplication factor for component video Y output. Value 0x80 (DEFAULT) represents 1.0. scale factor.
MCR[7:0]	Bits [7:0]–A8	Multiplication factor for Cr (or R-Y) component prior to subcarrier modulation.

***Table 2-5. Programming Detail For All Read/Write Registers** (12 of 16)*

Bit/Register Names	Bit Location	Bit/Register Definition
MODE2X	Bit 7–D4	0 = Normal operation (DEFAULT). 1 = Divides selected input clock by two (allows for single edge rather than double-edge clock input for pixel latching).
MSC[31:0]	Bits [7:0]–B4, B2, B0, AE	Subcarrier increment.
MSC_DB[31:0]	Bits [7:0]–48, -46, -44, -42	Subcarrier increment for Db component of SECAM. MSC_DB = int ((272/H_CLKO) * 2^{32} + 0.5)
MY[7:0]	Bits [7:0]–AC	Multiplication factor for Luma component. Controls adjustment of contrast.
NI_OUT	Bit 0–A2	0 = Interlaced analog video output. (DEFAULT) 1 = Noninterlaced analog video output.
OFFSET_RGB	Bit 1–32	This bit is only effective when OUT_MODE[1:0] = 11, HDTV_EN = 1, and RASTER_SEL is nonzero. 0 = Standard RGB digital input. Range is 0 – 255 decimal. (DEFAULT) 1 = HDTV OFFSET RGB digital input. Range is 16 – 235 decimal.
OUT_MODE[1:0]	Bits [3:2]–D6	00 = Video[0] = Composite (CVBS), Video[1] = Luminance (Y), Video[2] = Chrominance (C), Video[3] = Luma_Delay (Y_DLY) (DEFAULT) 01 = Video[0-3] is CVBS_DLY/ Y/ C/ Y_DLY 10 = Video[0-3] is V/ Y/ U/ Y_DLY 11 = Video[0-3] is VGA (RGB/x), SCART, or HDTV output mode. See EN_SCART and HDTV_EN bit descriptions for more programming detail.
OUT_MUXA[1:0]	Bits [1:0]–CE	00 = Output Video[0] on DACA (DEFAULT = Composite (CVBS)) 01 = Output Video[1] on DACA 10 = Output Video[2] on DACA 11 = Output Video[3] on DACA
OUT_MUXB[1:0]	Bits [3:2]–CE	00 = Output Video[0] on DACB 01 = Output Video[1] on DACB (DEFAULT = Luminance (Y) 10 = Output Video[2] on DACB 11 = Output Video[3] on DACB
OUT_MUXC[1:0]	Bits [5:4]–CE	00 = Output Video[0] on DACC 01 = Output Video[1] on DACC 10 = Output Video[2] on DACC (DEFAULT = Chrominance) 11 = Output Video[3] on DACC
OUT_MUXD[1:0]	Bits [7:6]–CE	00 = Output Video[0] on DACD 01 = Output Video[1] on DACD 10 = Output Video[2] on DACD 11 = Output Video[3] on DACD (DEFAULT = Luma Delay (Y_DLY))
PAL_MD	Bit 5–A2	Video output switch bit after power-up. 0 = Disable phase alternation (NTSC and SECAM). (DEFAULT) 1 = Enable phase alternation (PAL). ***NOTE(S):*** The PAL pin (#50) determines the power-up standard definition video output. This bit overrides the PAL pin after power-up.
PHASE_OFF[7:0]	Bits [7:0]–B6	Subcarrier phase offset. Default value is 00. SCH Phase increased by 1.406 degrees per bit increment.

Table 2-5. Programming Detail For All Read/Write Registers *(13 of 16)*

Bit/Register Names	Bit Location	Bit/Register Definition
PIX_DOUBLE	Bit 6–38	Low resolution pixel doubling bit. 0 = Encoder accepts each pixel input individually and processes it. (DEFAULT) 1 = Encoder replicates/copies each input pixel received. This bit is automatically set for autoconfiguration modes #12, #13, and #41.
PKFIL_SEL[1:0]	Bits [5:4]–D8	Text sharpening filter. Also referred to as the luma peaking filter selection (Refer to Section 1.3.36 and Figure 1-27 for details). 00 = Bypass (DEFAULT) 01 = Filter 1 (1 dB gain) 10 = Filter 2 (2 dB gain) 11 = Filter 3 (3.5 dB gain)
PLL_32CLK	Bit 5–38	Use this bit primarily to support the 1024 x 768 resolution and additional 800 x 600 overscan options. For more details, review the 3:2 Clocking Mode section. 0 = Use PLL 3x pixel clock output. (DEFAULT) 1 = Use PLL generated 2x pixel clock to run the encoder and output timing section. Use PLL generated 3x pixel clock to run the flicker filter. ***NOTE(S):*** The 3x pixel clock will be output from the CLKO pin during either state of this bit.
PLL_DIV10	Bit 2–3A	Scales the CLKO frequency. (See Section 1.3.6 for details) 0 = PLL equation divided by 6. (DEFAULT) 1 = PLL equation divided by 10.
PLL_FRACT[15:0]	Bits [7:0]–9E, -9C	Fractional portion of PLL multiplier.
PLL_INPUT	Bit 1–3A	0 = PLL uses the crystal between XTALIN and XTALOUT pins to generate the CLKO programmed frequency. (DEFAULT) 1 = PLL uses CLKI/2 as the reference for the PLL.
PLL_INT[5:0]	Bits [5:0]–A0	Integer portion of PLL multiplier.
PLL_KEEP_ALIVE	Bit 4–30	0 = Normal operation. (DEFAULT) 1 = Keeps PLL enabled during the sleep mode. This bit is overwritten by DIS_PLL. If the PLL is used to provide a system clock, this bit keeps it functioning if the rest of the chip is slept through either the sleep pin or sleep bit. This bit has no affect if DIS_PLL is set.
PROG_SC	Bit 0–D8	SECAM subcarrier control bit. PROG_SC only has an effect when FM bit is set. 0 = SECAM subcarrier is generated on lines 23–310 and 336–623. (DEFAULT) 1 = SECAM subcarrier is generated on the active lines defined by V_BLANKO[7:0] and V_ACTIVEO[8:0].
RASTER_SEL[1:0]	Bits [1:0]–28	This bit is only effective when HDTV_EN = 1, and OUT_MODE[1:0] = 11 00 = Device does not generate trilevel sync automatically in HDTV output mode. Trilevel sync periods dictated by active HSYNC* input signal (as HIGHSYNC) and active VSYNC* input signal (as LOWSYNC). (DEFAULT) 01 = Trilevel sync generation for 480P format. 10 = Trilevel sync generation for 720P format. 11 = Trilevel sync generation for 1080I format.
REGFSCONV[5:0]	Bits [5:0]–58	Works in conjunction with FIL_4286INCR[7:0] to set gain on UV digital component. Review the SECAM output section for the correct equations.
Reserved	Various	Reserved for future software compatibility; should be set to 0 for normal operation.

Table 2-5. Programming Detail For All Read/Write Registers *(14 of 16)*

Bit/Register Names	Bit Location	Bit/Register Definition
RGB2YP$_R$P$_B$	Bit 6–28	HDTV output switching bit. This bit is only effective when HDTV_EN = 1, OUT_MODE[1:0] = 11, RASTER_SEL[1:0] = nonzero, and IN_MODE[3:0] = a RGB input format. 0 = Digital RGB Input to HDTV RGB output. (DEFAULT) 1 = Digital RGB Input to HDTV YP$_R$P$_B$ output.
RPR_SYNC_DIS	Bit 5–28	This bit is only effective when OUT_MODE[1:0] = 11, HDTV_EN = 1, and RASTER_SEL is nonzero. 0 = Enables trilevel sync on HDTV Red or P$_R$ output. (DEFAULT) 1 = Disables trilevel sync on HDTV Red or P$_R$ output. This bit will have to be set manually for EIA-770.3 compliance.
SC_PATTERN	Bit 1–D8	SECAM phase sequence. SC_PATTERN only has an effect when FM bit is set. 0 = 0° 0° 180° 0° 0° 180° SECAM subcarrier phase sequence. (DEFAULT) 1 = 0° 0° 0° 180° 180° 180° SECAM subcarrier phase sequence.
SERIALTEST[7:0]	Bits [7:0]–28	Use this register for testing the write and read ability of the serial master. A consecutive write and read sequence will return the original value. The default value is 0x00.
SETUP	Bit 1–A2	0 = Setup off. The 7.5 IRE pedestal setup is disabled for active video lines (NTSC-J, PAL, and SECAM). 1 = Setup on. The 7.5 IRE pedestal setup is enabled for active video lines (NTSC-M). (DEFAULT)
SETUP_HOLD_ADJ	Bit 4–32	0 = Graphic port inputs must have minimum setup = 3 ns, hold = 0 ns (DEFAULT). This setting is compatible with Bt868/869. 1 = Graphics port inputs must have minimum setup = 1.25 ns, hold = 1.5 ns. This is a new option for interfacing the CX25870/871 to other data master devices.
SLAVER	Bit 5–BA	Interface bit: Works in conjunction with EN_BLANKO, EN_DOT, and EN_OUT Controls whether the interface will be timing Master or timing Slave. 0 = Configures encoder as the timing master. HSYNC* and VSYNC* will be transmitted as outputs when this bit or a combination of this bit and SLAVE pin is 0. (DEFAULT) 1 = Configures encoder as the timing slave (pseudo-master or slave interface). HSYNC* and VSYNC* will be received as inputs when this bit or a combination of this bit and SLAVE pin is 1.
SLEEP_EN	Bit 7–30	0 = Normal operation. (DEFAULT) 1 = Enables sleep state. Shuts down all internal clocks except the serial port interface clock. Disables all digital I/O pins except: SLEEP, ALTADDR, CLKI, CLKO, and XTALOUT. Disables the PLL. Turns off all DACs and VREF. SLEEP and RESET* pins are never disabled.
SRESET	Bit 7–BA	0 = Normal Operation. (DEFAULT) 1 = Setting this bit performs a software reset. All registers are reset to their default state. This bit is automatically cleared.
SYNC_AMP[7:0]	Bits [7:0]–A4	Multiplication factor for controlling the analog sync amplitude. SYNC_AMP + 1 LSb (least significant bit) = +1.25 mV increase in the analog sync amplitude.
TIMING_RST	Bit 7–6C	0 = Normal Operation. (DEFAULT) 1 = Enable timing reset. Resets timing and pixel counters to 1 This bit is automatically cleared. The designer should wait a minimum of 1 ms, after the last register write before enabling TIMING_RST.
V_ACTIVEI[9:8] V_ACTIVEI[7:0]	Bits [3:2]–96 and Bits [7:0]–94	Number of active input lines.

Table 2-5. Programming Detail For All Read/Write Registers *(15 of 16)*

Bit/Register Names	Bit Location	Bit/Register Definition
V_ACTIVEO[8] V_ACTIVEO[7:0]	Bit 7–86 and Bits [7:0]–84	Number of active output lines/field.
V_BLANKI[7:0]	Bits [7:0]–92	Number of input lines between VSYNC* leading edge and first active line.
V_BLANKO[7:0]	Bits [7:0]–82	Line number of first active output line (number of blank lines + 1).
V_LINESI[10] V_LINESI[9:8] V_LINESI[7:0]	Bit 1–38, Bits [1:0]–96, Bits [7:0]–90	Number of vertical input lines. This register value must match the graphic controller's VTOTAL register for a new overscan ratio.
V_SCALE[13:8] V_SCALE[7:0]	Bits [5:0]–9A and Bits {7:0]–98	Vertical scaling coefficient. VSR = V_ACTIVEI / (ALO * (1 – VOC)) V_SCALE[13:0] = (int) ((VSR – 1) * 2^{12})
VBLANKDLY	Bit 4–8E	0 = Normal operation. (DEFAULT) 1 = The effective vertical blanking value in the second field is V_BLANKI+1. Commonly used in CCIR601 input. No effect if 0.
VSYNC_DUR	Bit 3–A2	0 = Generates 2.5 line VSYNC analog output (found in equalization and serration pulse region). Common for most PAL and SECAM formats. 1 = Generates 3 line VSYNC analog output (found in equalization and serration pulse region). Common for all NTSC, PAL-N, PAL-M, and PAL-60 formats. (DEFAULT)
VSYNCI	Bit 4–C6	0 = CX25870/871 transmits or receives active digital low VSYNC*. (DEFAULT) 1 = CX25870/871 transmits or receives active digital high VSYNC*.
VSYNWIDTH[2:0]	Bits [2:0]–74	Controls the width of the VSYNC* output pulse. Denotes the number of lines the VSYNC* digital signal remains low on field transitions. Value will be hexadecimal and its units are in terms of lines. A value of 0 is a disallowed condition. The acceptable range is 1 line to (2^3 –1) lines. The default value is 1. Never set to 0. This register is only effective in master interface.
WSSDAT[20:1]	Bits [7:0]–64, - 62, and bits [3:0]–60	Wide screen signaling (WSS) data bits. Review WSS section for more details.
WSSINC[19:0]	Bits [3:0]–6A and bits [7:0]–68, - 66	WSS DTO increment bits. Review WSS section for more details.
XDSSEL[3:0]	Bits [7:4]–5E	Line position of Extended Data Services (XDS) Content. Controls which line contains Extended Data Services data. Each line enable is independent of the other. 0001 = Extended Data Services on line 282 (525-line) and line 333 (625-line). 0010 = Extended Data Services on line 283 (525-line) and line 334 (625-line). 0100 = Extended Data Services on line 284 (525-line) and line 335 (625-line). (DEFAULT) 1000 = Extended Data Services on line 285 (525-line) and line 336 (625-line).
XTL_BFO_DIS	Bit 5–30	On power-up, a 50% duty cycle buffered output will be transmitted at the frequency found between the XTALIN and XTALOUT ports from the XTL_BFO pin #3. 0 = Enable buffer crystal clock output. [DEFAULT] 1 = Disable buffer crystal clock output.
XTAL_PAD_DIS	Bit 6–30	0 = Normal operation. (DEFAULT) 1 = Disable XTALIN and XTALOUT crystal pin. Encoder must receive main clock through CLKI pin.

***Table 2-5. Programming Detail For All Read/Write Registers** (16 of 16)*

Bit/Register Names	Bit Location	Bit/Register Definition
Y_ALTFF[1:0]	Bits [1:0]–34	Luma alternate flicker filter selection. This bit will only have an effect when ADPT_FF is set. Y_ALTFF should always be programmed to a value greater than or equal to F_SELY. 00 = 5 line (DEFAULT) 01 = 2 line 10 = 3 line 11 = 4 line
Y_OFF[7:0]	Bits [7:0]–5A	Brightness control. This is the luminance level offset. Expressed as a 2's complement number. (DEFAULT = 0x00) The luminance level offset is referenced from black, and can be adjusted from -22.31 IRE (below black) to +22.14 IRE (above black). Active video will be added to the offset level. Y_OFF is a two's complement number, such that 0x00 = 0 IRE offset 0x7 is +22.14 IRE offset and 0x8 is -22.31 IRE offset. 1 lsb =1.25 mV or .175 IRE of adjustment.
Y_THRESH[2:0]	Bits [2:0]–36	Controls the sensitivity or limit of turning on the alternate flicker filter for luma in adaptive flicker filter mode. (DEFAULT = 000)
YATTENUATE[2:0]	Bits {2:0]–CA	Works in conjunction with register MY for contrast control. This bit field is for Luma Attenuation in discrete steps. 000 = 1.0 gain (no attenuation) (DEFAULT) 001 = 15/16 gain 010 = 7/8 gain 011 = 3/4 gain 100 = 1/2 gain 101 = 1/4 gain 110 = 1/8 gain 111 = 0 gain (Force Luma to 0)
YCORING[2:0]	Bits [5:3]–CA	Luma Coring. Values below the YCORING[2:0] limits that follow are automatically clamped to pure black by the encoder. 000 = Bypass (DEFAULT) 001 = 1/128 of range 010 = 1/64 of range 011 = 1/32 of range 100 = 1/16 of range 101 = 1/8 of range 110 = 1/4 of range 111 = Reserved
YLPF[1:0]	Bits [5:4]–96	Luma Post-Flicker Filter/Scaler Horizontal Low Pass Filter: 00 = Bypass (DEFAULT) 01 = Luma Horizontal LPF1 setting 10 = Luma Horizontal LPF2 setting 11 = Luma Horizontal LPF3 setting
YSELECT	Bit 6–36	This bit will only have an effect when ADPT_FF is set. 0 = Use the C_THRESH value to determine the threshold for turning on the alternate flicker filter setting for chrominance. (DEFAULT) 1 = Use the Y_THRESH value to determine the threshold for turning on the alternate flicker filter setting for chrominance. Both chroma and luma digital data is automatically processed with their alternate flicker filter settings when the Y_THRESH limit is exceeded.

3.0 PC Board Considerations

For optimum performance of the CX25870/871, proper CMOS layout techniques should be studied before PC board layout is begun.

The layout should be optimized for lowest noise on the power and ground planes by providing good decoupling. The trace length between groups of VAA (or VDD) and GND (or VSS) pins should be as short as possible to minimize inductive ringing.

A well-designed power distribution network is critical to eliminating digital switching noise. The ground plane must provide a low-impedance return path for the digital circuits. A PC board with a minimum of four layers is recommended, with layers 1 (top) and 4 (bottom) for signals, and layers 2 and 3 for ground and power, respectively.

3.1 Component Placement

Components should be placed as close as possible to the associated pin in order for traces to be connected point to point. The optimum layout places the CX25870/871 as close as possible to the power supply connector and the video output connector, as illustrated in Figure 3-1.

Some other PC board layout tips to follow are:

- Include a silk screen layer of labels in your layout artwork showing each component and its reference designation. Label numbered test nodes and the correct polarity of diodes and electrolytic capacitors.
- Leave adequate space around components so ESD transients only have minimally adverse effects on ICs.
- Make sure signals that need access for troubleshooting or analysis are easy to find and probe.

3.2 Power and Ground Planes

For optimum performance, a common digital and analog ground plane and a common digital and analog power plane are recommended. The power plane should provide power to all CX25870/871 power pins, reference voltage (VREF) circuitry, and COMP decoupling.

The CX25870/871 power plane should be connected to the graphics system power plane (VCC) at a single point through a ferrite bead, as illustrated in Figures 3-1 and 3-2. This bead should be located within 3 inches of the CX25870/871. The bead provides resistance to switching currents by acting as a resistor at high frequencies. A low-resistance bead should be used, such as Ferroxcube 5659065-3B, Fair-Rite 2723021447, or TDK BF45-4001. See Table 3-1 for a typical parts list for key passive components.

Figure 3-1. Power Plane Illustration

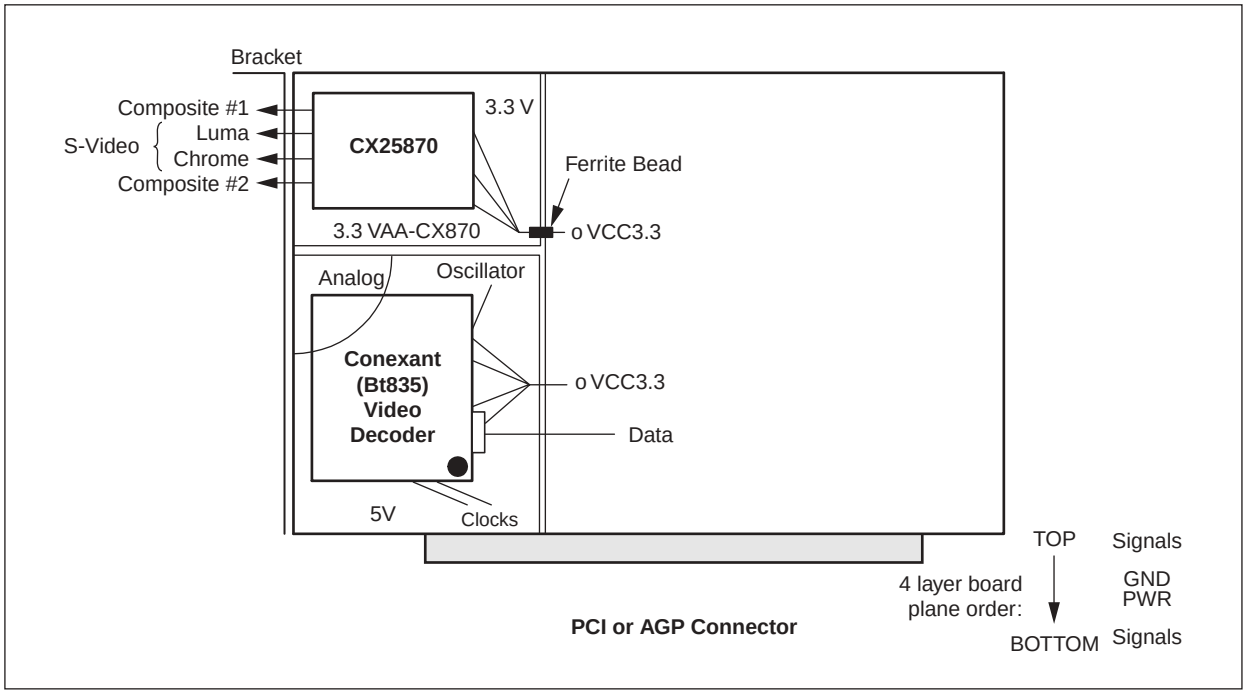

Figure 3-2. Connection Diagram for Output Filters and Other Key Passive Components/Standard Definition TV Out Only

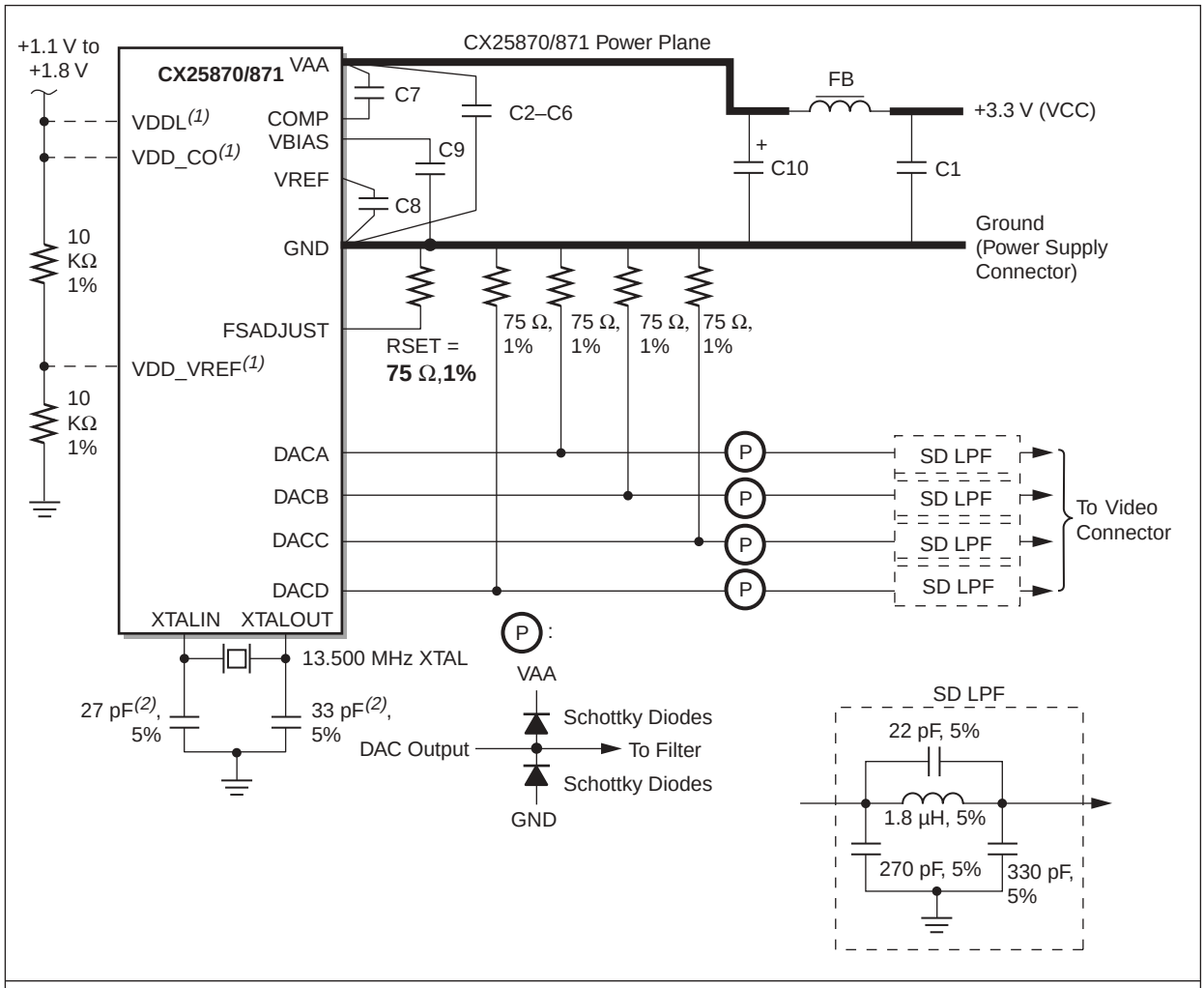

Note(s):

(1) VDDL VDD_CO, VDD_VREF must be tied to 3.3 V CX25870/871 Power Plane unless interface to low power graphics controller is required.

(2) Depending on the parasitic capacitance of your PCB and loading expectations of your crystals, these capacitor values may change slightly. Generally, the 27 pF and 33 pF combination matches a 20 pF internal XTAL load.

(3) No RF Modulator has been included on any of the DAC outputs. Baseband video is always generated by the CX25870.

100381_018a

Figure 3-3. Connection Diagram for Output Filters and Other Key Passive Components/Standard and HDTV Out

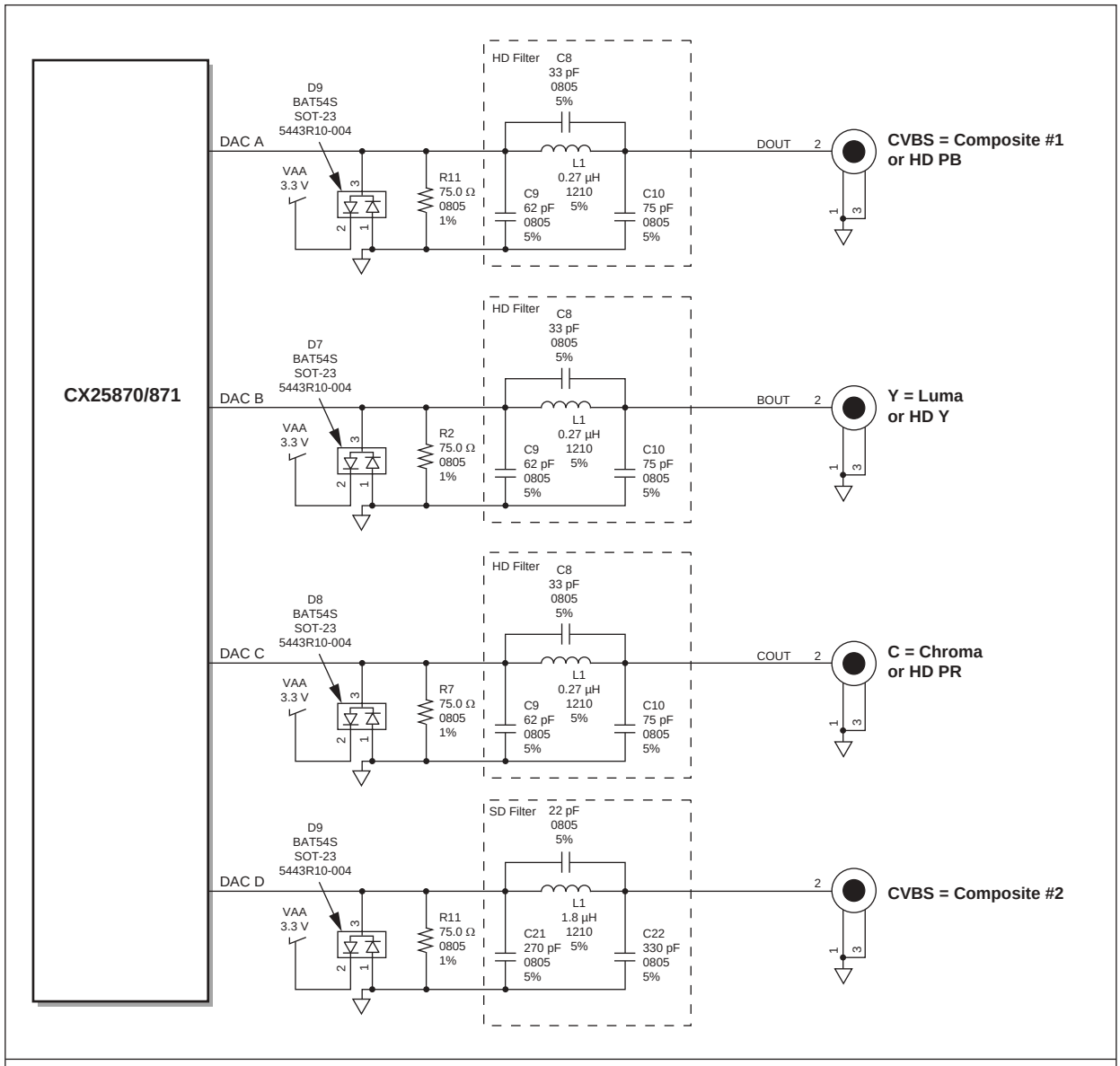

NOTE(S):

1. HD Filter imparts a passband of DC to 30 MHz.
2. SD Filter imparts a passband of DC to 8 MHz.

100381_084

Table 3-1. Typical Parts List for Key Passive Components

Location	Description	Vendor Part Number
C1–C7, C9	0.1 µF Ceramic Capacitor	Erie RPE112Z5U104M50V, or equivalent
C8	1.0 µF Ceramic Capacitor	Erie RPE11224U104M5V, or equivalent
C10	47 µF Capacitor	Mallory CSR13F476KM, or equivalent
FB	Ferrite Bead–Surface Mount	Fair-Rite 2743021447
RSET	75 Ω, 1% Metal Film Resistor	Dale CMF-55C, Many others
TRAP	Ceramic Resonator	Murata TPSx.xMJ or MB2 (where x.x = sound carrier frequency in MHz)
—	Schottky Diodes	BAT85 (BAT54F Dual) HP 5082-2305 (1N6263) Siemens BAT 64-04 (Dual)
XTAL	13.5000 MHz Fundamental, Parallel Resonant, 20 pF load, Crystal Oscillator with 25 ppm Total Tolerance over 0 °C – 70 °C range.	See Appendix B
NOTE(S): Vendor numbers are listed only as a guide. Substitution of devices with similar characteristics will not affect CX25870/871 performance.		

Figure 3-4. CX25870/871 3.3 V Recommended Layout for Connection with 3.3 V Master Device Standard Definition TV Out Only

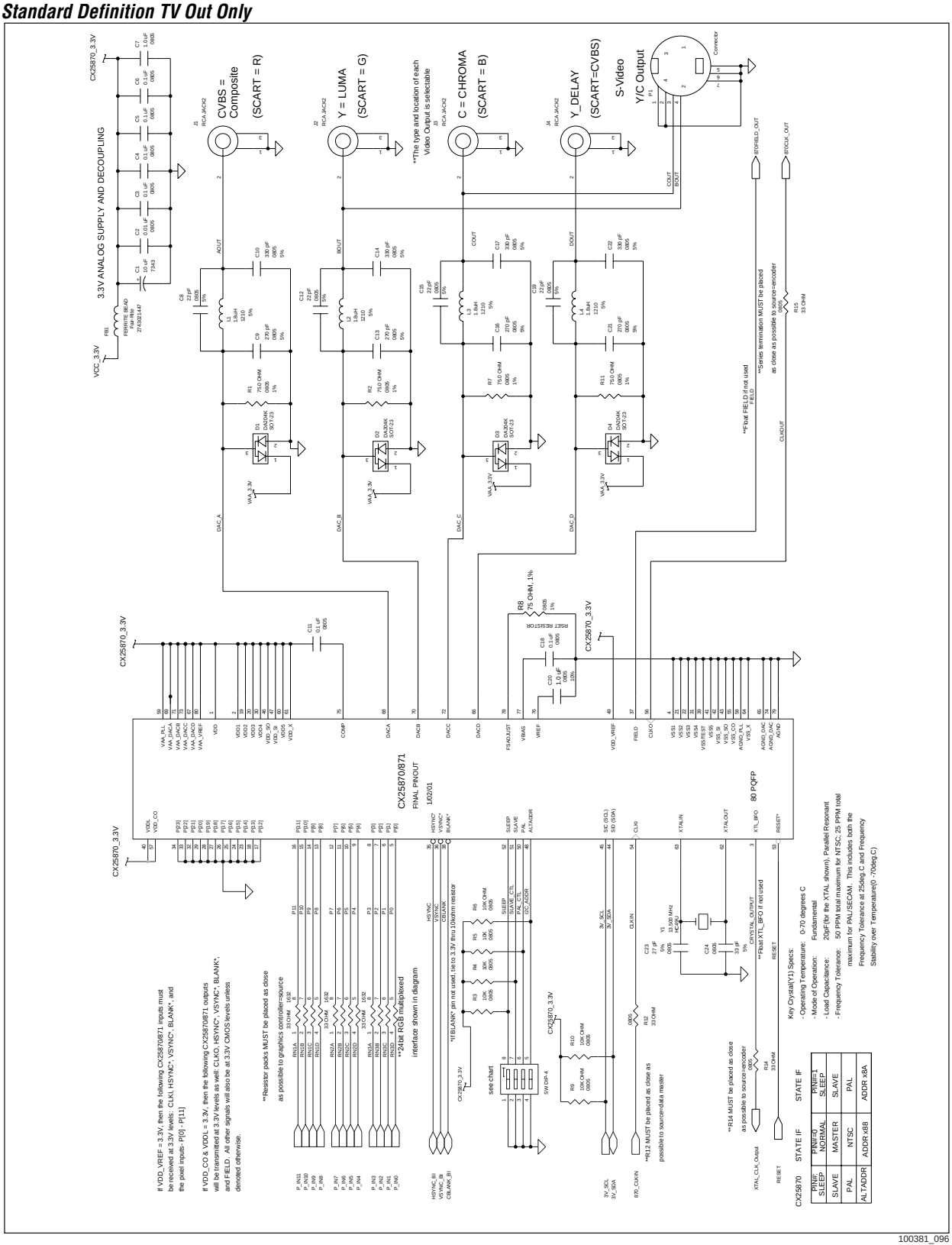

Figure 3-5. CX25870/871 3.3 V/1.8 V Recommended Layout for Connection with 1.8 V Master Device Standard Definition TV Out Only

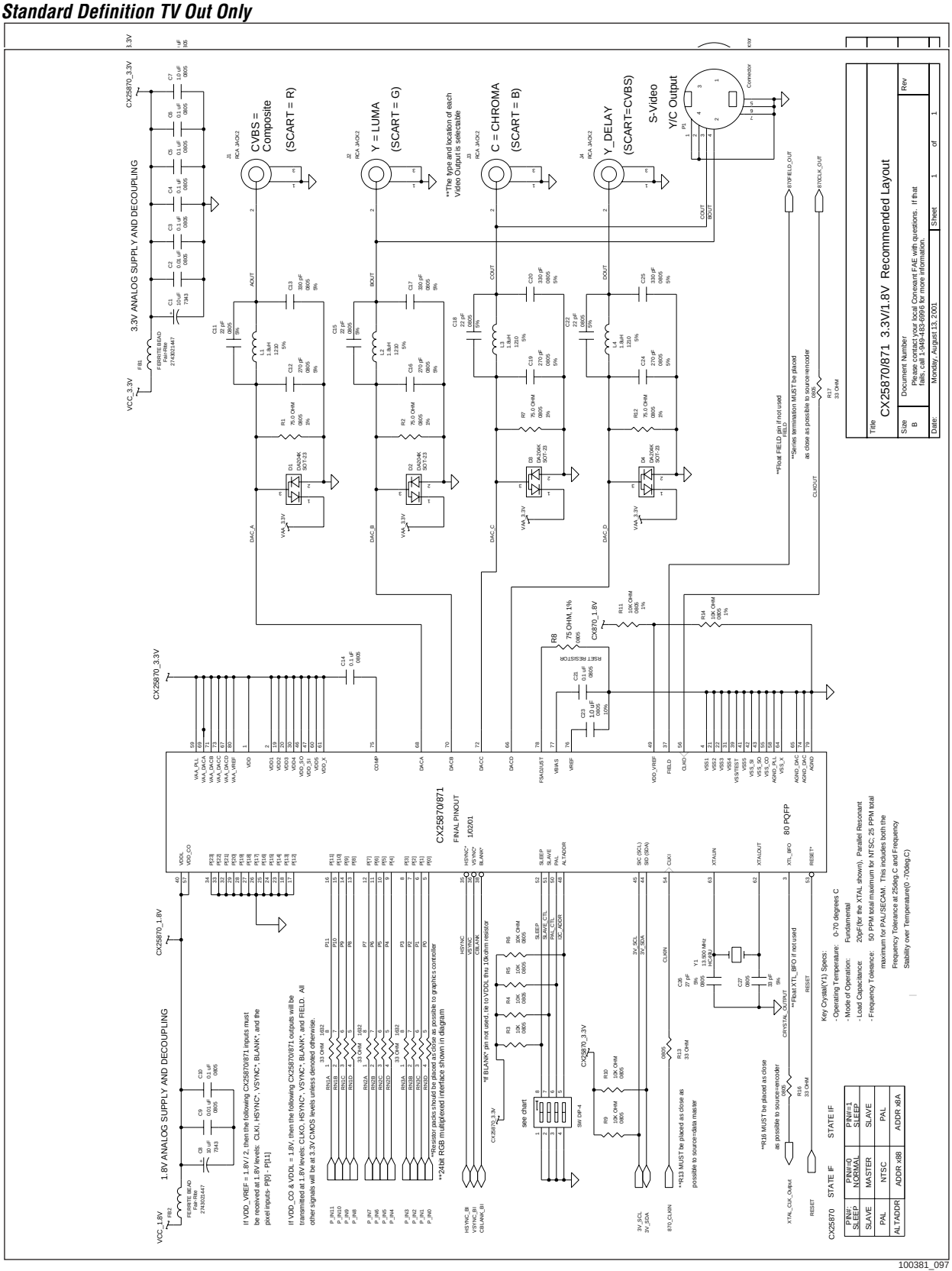

100381_097

3.3 Recommended Schematics and Layout for CX25870/871

For the CX25870/871 to operate at an optimal technical level, it is imperative to adopt the passive components, values, tolerances, and guidelines contained in the following figures.

Conexant has done extensive lab testing with these components, and found that they yield the best combination of performance and price.

The complete schematic diagram for a 3.3 V only design is illustrated in Figure 3-4.

The complete schematic diagram for a mixed 3.3 V and 1.8 V design environment is illustrated in Figure 3-5.

For a complete schematic diagram for a mixed 3.3V and lower voltage (1.5 V or 1.1 V) design environment, request assistance from your local FAE. The finished schematic for the 3.3 V/1.5 V or 3.3 V/1.1 V case will look similar to Figure 3-5.

Substitution of resistors, capacitors, inductors, and crystals with nonrecommended values or greater than recommended tolerances may degrade the video output quality of the CX25870/871 encoder.

3.4 Decoupling

3.4.1 Device Decoupling

For optimum performance, all capacitors should be located as close as possible to the device, and the shortest possible leads (consistent with reliable operation) should be used to reduce the lead inductance. Chip capacitors are recommended for minimum lead inductance. Radial lead ceramic capacitors can be substituted for chip capacitors and are better than axial lead capacitors for self-resonance. Values are chosen to have self-resonance above the pixel clock.

3.4.2 Power Supply Decoupling

The best power supply performance is obtained with a 0.1 µF ceramic capacitor decoupling each group of VAA pins and each group of VDD pins to GND. The capacitors should be placed as close as possible to the device VAA/VDD pins and GND pins and connected with short, wide traces.

The 47 µF capacitor shown in Figure 3-2 is for low-frequency power supply ripple; the 0.1 µF capacitors are for high-frequency power supply noise rejection. Inclusion of a 0.01 µF and a 1.0 µF capacitor between the group of VAA/VDD pins and GND/VSS pins will improve power supply decoupling at intermediate frequencies as well.

When a linear regulator is used, the proper power-up sequence must be verified to prevent latchup. A linear regulator is recommended to filter the analog power supply if the power supply noise is greater than or equal to 200 mV. This is especially important when a switching power supply is used, or low voltage interface is implemented, and the switching frequency is close to the raster scan frequency. About 5 percent of the power supply hum and ripple noise less than 1 MHz will couple onto the analog outputs.

3.4.3 COMP Decoupling

The COMP pin must be decoupled to the closest VAA pin, typically with a 0.1 µF ceramic capacitor. Low-frequency supply noise will require a larger value. The COMP capacitor must be as close as possible to the COMP and VAA pins. A surface-mount ceramic chip capacitor is preferred for minimal lead inductance. Lead inductance degrades the noise rejection of the circuit. Short, wide traces will also reduce lead inductance.

3.4.4 VREF Decoupling

A 1.0 µF ceramic capacitor should be used to decouple this input to GND.

3.4.5 VBIAS Decoupling

A 0.1 µF ceramic capacitor should be used to decouple this output to GND.

3.5 Signal Interconnect

3.5.1 Digital Signal Interconnect

The digital inputs to the CX25870/871 should be isolated as much as possible from the analog outputs and other analog circuitry. Also, these input signals should not overlay the analog power plane or analog output signals.

Most of the noise on the analog outputs will be caused by fast transitioning clock edges, data edges (less than 3 ns), and overshoot, undershoot, and ringing on the digital inputs.

The digital edge rates should not be faster than necessary because feedthrough noise is proportional to the digital edge rates. Lower-speed applications will benefit from using lower-speed logic (3–5 ns edge rates) to reduce data-related noise on the analog outputs.

Transmission lines will mismatch if the lines do not match the source and destination impedance. This will degrade signal fidelity if the line length reflection time is greater than one-fourth the signal edge time. Line termination or line-length reduction is the solution. For example, logic edge rates of 2 ns require line lengths of less than 4 inches without use of termination. Ringing can be reduced by damping the line with a series resistor (30–50 Ω).

Radiation of digital signals can also be picked up by the analog circuitry. This is prevented by reducing the digital edge rates (rise/fall time), minimizing ringing with damping resistors, and minimizing coupling through PC board capacitance by routing the digital signals at a 90-degree angle to any analog signals.

The clock driver and all other digital devices must be adequately decoupled to prevent noise generated by the digital devices from coupling into the analog circuitry.

3.5.2 Analog Signal Interconnect

The CX25870/871 analog output traces should be located as close as possible to the output connectors and be of equal length to minimize noise pickup and reflections caused by impedance mismatch.

The analog outputs are susceptible to crosstalk from digital lines; therefore digital traces must not be routed under or adjacent to the analog output traces.

To maximize the high-frequency power supply rejection, the video output signals should overlay the ground plane.

For maximum performance, the analog video output impedance, cable impedance, and load impedance should be the same. The load resistor connection between the video outputs and GND should be as close as possible to the CX25870/871 to minimize reflections. Unused DAC analog outputs should be left floating.

3.6 Applications Information

3.6.1 Changes Required to Accommodate CX25870/871 in Bt868/869-Designs

3.6.1.1 Software

The CX25870/871 is software backward compatible with Conexant's first generation VGA Encoder, the Bt868/869. This means that all register indices for the Bt868/869 were carried forward to the exact same indices for the CX25870/871. For Conexant's second generation encoder, new registers were added, but the actual addresses used were outside of the 0x6C to 0xD6 range reserved for the Bt868/869 legacy functionality. Some reserved bits within the Bt868/869 did take on significance with the CX25870/871 where necessary.

Table 3-2. Relative Register Map for CX25870/871

Shared CX25870/871 & Bt868/869 registers	Register Addresses 0x00 to 0x04 (Read Only) (Must be accessed through 'Legacy' read procedure with ESTATUS[1:0] bits in Bt868/869) ('Standard' or 'Legacy' read-back procedure ok for CX25870/871)
CX25870/871 specific registers	Register Address 0x06(Read Only) and Register Addresses 0x28E to 0x6A (Read/Write)
Shared CX25870/871 & Bt868/869 registers	Register Address 0x6C(Read/Write) to Register Address 0xD6(Read/Write)
CX25870/871 specific register	Register Address 0xD8(Read/Write)

The most significant difference in software between the two encoders is the fact that the CX25870/871 can be read from using the Standard serial method as well as the Legacy serial method. To use the Standard procedure, the master issues CX25870's device ID and subaddress in consecutive bytes, and the slave acknowledges with a pulse after each transaction. Upon completion of these 2 steps, the slave transmits the final byte which contains the 8 bits of data. The Bt868/869 cannot be read from in this manner and instead relies solely on the Legacy method. This process is explained step-by-step in the 'TV Auto-Detection Procedures' section of this specification.

Another difference in terms of software between the two encoders is the power-up video output routing. The CX25870 after power-up or a signal-driven reset transmits Video0 = composite on DAC_A, Video1 = Luma (Y) on DAC_B, Video2 = Chroma (C) on DAC_C, and Video3 = Luma Delay on DAC_D.

The Bt868 was different in this respect. On power-up, it sent out Video0 = composite from DAC_A, DAC_B, and DAC_C. Reprogramming register 0xCE correctly ensures proper video output routing.

Another difference between the two encoders is the default video output routing through the on-chip DACs. On power-up, the Bt868 transmitted Video[0] = Composite from all three of its DACs. Due to the popularity of S-Video out, the CX25871, on power-up, broadcasts Video[0] = Composite from DAC_A, Video[1] = Luminance from DAC_B, Video[2] = Chrominance from DAC_C, and Video[3] = Delayed Luminance from DAC_D. For Bt868 drivers that did not program register 0xCE, this step may be necessary to re-route the Video outputs with the CX25870.

As a result of software register compatibility, no modifications to a customer's source code are required to enable the same features that exist within both Conexant VGA encoders. Of course, to exploit the new features within the CX25870/871, such as display of 1024x768 resolution on a TV, HDTV output, SECAM output, and others, some software changes and new register sets will be necessary. This usually equates to the release of a new driver and/or graphics BIOS for support of the CX25870.

3.6.1.2 Hardware

Similarly, the Bt868/869 is pin-for-pin backward compatible with the newest Conexant encoder. Both devices are housed in exactly the same compact 80-pin, [14 mm x 14 mm x 2.4 mm] plastic PQFP package. Furthermore, aside from pins 2, 3, 65, 66, and 67, which were no connects within the Bt868/869, the CX25870/871 is identical in its pinout to the previous generation.

Consequently, if the customer's Bt868-designed PCB actually has no connects for the pins listed as N/C on the Bt868/869, then no PC board changes are needed except for some passive component stuffing changes when upgrading to the CX25870/871. However, if the Bt868/869 N/C pins were actually grounded or utilization of the new external features within the CX25870/871 is desired, then a few changes to a customer's Bt868/869-based PC Board are definitely required to accommodate the new CX25870/871. Table 3-3 summarizes all the likely alterations that need to be performed to existing designs.

Table 3-3. Hardware Modifications to Bt868/869-based PCB Required to Accommodate the CX25870/871 (1 of 3)

Pin #	Bt868/9 Pin Name	CX25870/1 Pin Name	Comment
1	AGND	VDD	This pin should be tied to VDD (3.3V) for both the CX25870/1 and Bt868/9, so the encoder's output video levels match the IRE levels that it was designed to transmit. Conexant has seen 2-3 IRE excursions away from the correct color bar and other test pattern IRE levels and have verified that either encoder's pin #1 being tied to GND to be the root cause. An output video difference of 2-3 IRE is a very small amplitude AND would only be noticeable if you used a VM700T from Tektronix or some other advanced piece of video measuring equipment. Visually, it is quite difficult to even detect a 2-3 IRE excursion. In conclusion, tie Pin #1 which was the Bt868/9's 'AGND' to VDD/VAA = 3.3V for both the CX25870/1 and Bt868/9 for best operation. Rename this pin (#1) on any schematics so it says 'VDD.'
2	N/C	VDD	The digital power pin needs to be tied to 3.3V. This was a no connect for the Bt868/9.
3	N/C	XTL_BFO	The buffered crystal clock output pin should be floated if not used. This was a no connect for the Bt868/9. For CX25870/1-designs, a small (e.g. 33 ohm) series resistor should be added in series to XTL_BFO as close as possible to the signal source device. This reduces overshoot and undershoot on this signal as it changes states.

Table 3-3. Hardware Modifications to Bt868/869-based PCB Required to Accommodate the CX25870/871 (2 of 3)

49	VDDMAX	VDD_VREF	Pin 49 has been renamed for the CX25870/1. For 3.3V swings on the interface signals for CX25870/1-designs, this pin should be tied directly to 3.3V as was the case with Bt868/9-designs. For lower voltage swings for the digital interface signals, using a voltage divider circuit or some other method, tie the CX25870/871's VDD_VREF input (pin 49) to (VDDL / 2). See Figure 3-5 for an illustration of this concept.
50	PAL	PAL	If the desired video output at power-up is PAL, then a 10 kΩ pull-up resistor is recommended for this pin for CX25870/1-designs. No pull-up resistor was advocated for Bt868/9-designs. If the desired video output at power-up is NTSC, then this pin should be tied directly to GND.
51	SLAVE	SLAVE	If desired interface at power-up is slave or pseudo-master (i.e. slave video timing), then a 10 kΩ pull-up resistor is recommended for this pin for CX25870/1-designs. No pull-up resistor was advocated for Bt868/9-designs. If desired interface at power-up is master (i.e. master video timing), then this pin should be tied directly to GND.
52	SLEEP	SLEEP	If desired power management state at power-up is Normal Operation, then this pin should be tied directly to GND. If desired power management state at power-up is Sleep, then a 10 kΩ pull-up resistor is recommended for this pin for CX25870/1-designs. No pull-up resistor was advocated for Bt868/9-designs.
62 63	XTALOUT XTALIN	XTALOUT XTALIN	The recommended capacitor value from XTALIN to GND has been altered from 33 pF to 27 pF for a 20 pF load crystal. This ensures an output-to-input voltage gain sufficient to make up signal losses through the crystal since the ratio of $C_{XTALOUT}$ / C_{XTALIN} = 1.1 to 1.5. The buffered clock crystal output frequency, which can be measured from the CX25870/1's XTL_BFO output port, should be within 25 ppM = +/- 337 Hz. of 13.5000 MHz. at all times. The high amount of tolerance is necessary so the encoder can generate sufficient accuracy for the subcarrier frequencies for SECAM, PAL, and NTSC. If this type of accuracy does not exist when using C_{XTALIN} = 27 pF then C_{XTALIN} should be increased to 30 pF or 33 pF and the frequency re-measured. Different PCBs exhibit different amounts of parasitic capacitance so one value for C_{XTALIN} does not necessarily fit for all designs. For Bt868/9-designs, C_{XTALIN} and $C_{XTALOUT}$ were recommended to be equal (33 pF). The 1 MΩ resistor, a requirement of Bt868/9-designs as an external passive between these 2 pins, is no longer necessary with CX25870/1-designs. If it is present, then this has no adverse effects on the CX25870/1's overall video performance.
65	N/C	AGND_DAC	Whether or not DACD is actually used as a video output within the CX25870/1 design, this pin must be tied to GND. For Bt868/9-based designs, this pin was a No Connect and for best performance should be tied to GND or left open.
66	N/C	DACD	Pin 66 for the CX25870/1 is the fourth DAC = DACD. If DACD is used, connect this output to a video connector. If DACD is not used, leave this pin no connected for CX25870/1-designs. The circuitry for the low pass filter for DACD will also need to be added for CX25870/1 designs. For Bt868/9-based designs, this pin was a No Connect and for best performance should be tied to GND or left open.
67	N/C	VAA_DACD	This is the power pin for DACD. Whether or not DACD is actually used within the design, this pin must be tied to VDD=VAA=3.3V for all CX25870/1-designs. For Bt868/9-based designs, this pin was a No Connect and for best performance should be tied to GND or left open.

Table 3-3. Hardware Modifications to Bt868/869-based PCB Required to Accommodate the CX25870/871 (3 of 3)

75	COMP	COMP	A 0-10 ohm resistor between COMP and 0.1 µF capacitor (which is connected to VAA) was originally recommended for Bt868/9-designs. The 0-10 ohm resistor placed between the 0.1 µF cap and the COMP pin was recommended to better tune the COMP circuit to prevent an internal op-amp from oscillating. Based on the Bt868/9's DAC performance over time and the CX25870/1's continued usage of these same DACs, this resistor was deemed to not be necessary and should be removed for all CX25870/1 designs.
76	VREF	VREF	Capacitor from VREF to GND must be 1.0 µF for the CX25870/1. Capacitor from VREF to GND must be 0.1 µF for the Bt868/9.
78	FSADJUST	FSADJUST	RSET, the resistor from FSADJUST pin to GND, must be 75 Ω, +/- 1% for all CX25870/1-based designs. RSET must be 100 ohm, +/- 1% for all Bt868/9-based designs.
NOTE(S): N/C = No connect			

To ensure proper operation of the CX25870/871, the designer must adhere to each recommendation contained in Table 3-3.

3.6.2 Programmable Video Adjustment Controls

The quality of the TV Out picture can be altered depending on the digital input content, the settings of various output video adjustment control registers, and the TV itself. The values of the CX25870/871's Y_OFF, MY, Y_ATTEN, MCB, MCR, C_ATTEN, and PHASE_OFF registers all definitely impact the perceived quality of the analog NTSC/PAL/SECAM video signal. For this reason, for graphics cards that utilize the encoder, Conexant recommends the inclusion of a Graphical User Interface (GUI) for TV Out. By designing this intelligent control panel, the end-user can improve his TV image quality by adjusting the proper slider or other controls at his disposal. Behind these controls, intelligence must be embedded in the TV Out source code and driver so the values of certain registers get adjusted depending on the status of the radio button, checkbox, slider, or pulldown menu.

An illustration of a sample GUI for TV Out is shown in Figure 3-6.

Figure 3-6. Conexant Recommended TV Out GUI for CX25870/871

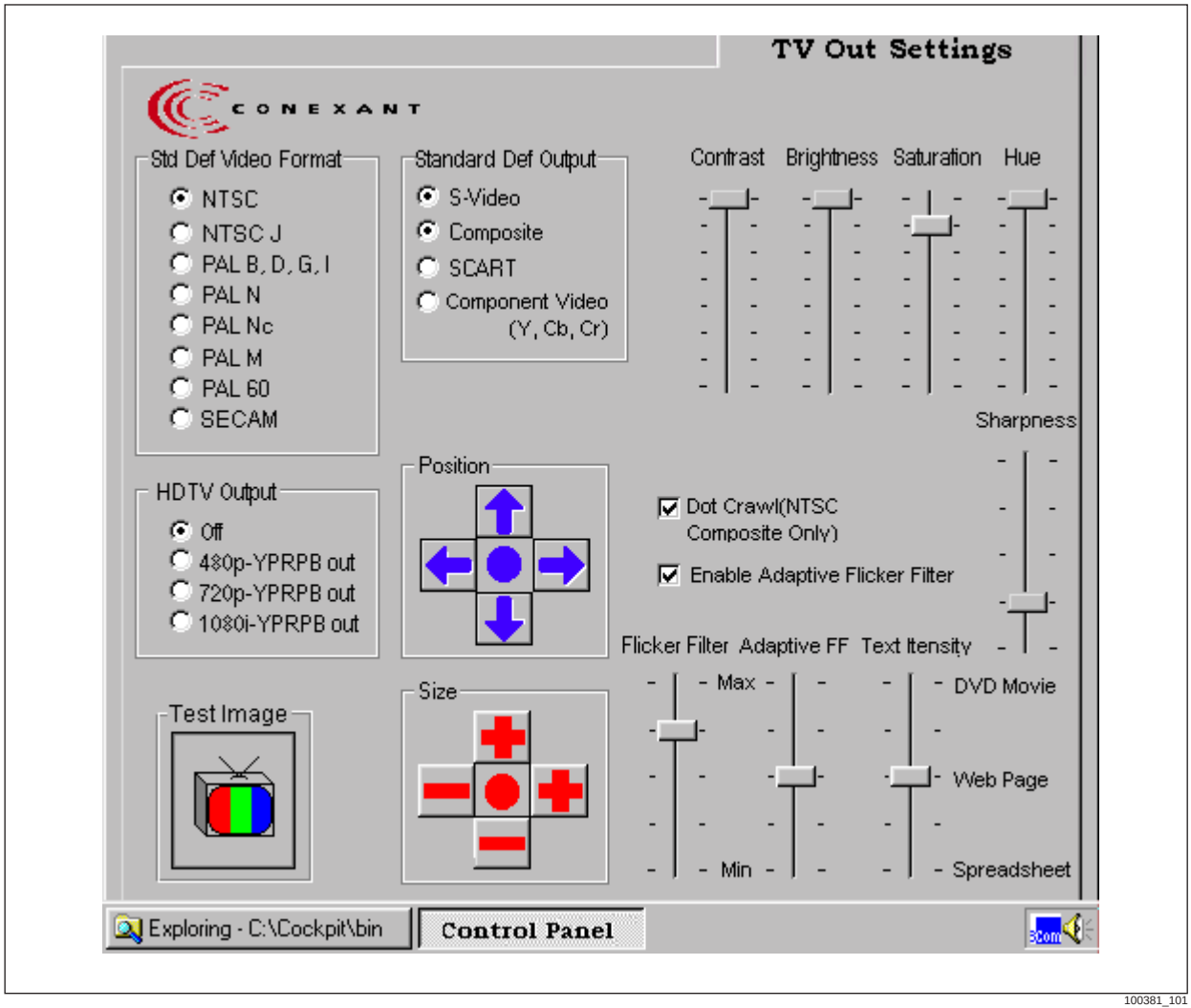

3.6.2.1 Contrast

Contrast is a video quality that refers to how far the whitest whites are from the blackest blacks in an analog video waveform. If the peak white is far away from the peak black, the image is said to have high contrast. With high contrast, the image is very pure like a black and white tile floor. If the two parameters are very close together, the image is said to have poor, or low, contrast. With low amounts of contrast, an image may be referred to as being washed-out. Instead of easily recognized black portions of the image versus white parts, the image with low contrast looks gray.

Register MY[7:0] in conjunction with register Y_ATTENUATE[2:0] controls adjustment of contrast. Y_ATTENUATE has 8 possible values ranging from 1.0 gain (No attenuation) to 0 gain (Force Luminance to 0). Conexant recommends inclusion of an 8-level slider to control the Contrast level. Each single movement of the slider should reprogram this bit field to a different fractional value. Lab testing has shown that values from ¾ gain (Y_ATTENUATE=011) to 15/16 gain (i.e., 001) yield the crispest TV picture.

Register MY modifies the luminance multiplier allowing for a larger or smaller luminance range. For more drastic changes in the Contrast, change MY. For more subtle changes, shifting the Y_OFF register as the end-user moves the slider should be sufficient.

Since the difference between contrast and brightness is usually understood by video professionals only, Conexant recommends the designer increment or decrement the YATTENUATE[2:0] field for either brightness or contrast adjustments.

3.6.2.2 Saturation

Saturation is the amount of color present. For example, a lightly saturated green looks olive-green to gray while a fully saturated green looks like the color of a pine tree. Saturation does not mean the brightness of a color, just how much pigment is used to make the color itself. The less pigment, the less saturated the color is, effectively adding white to the pure color.

The amount of Saturation is controlled by the bit field named CATTENUATE[2:0]. CATTENUATE has eight possible values ranging from 1.0 gain (No attenuation) to 0 gain (Force Chrominance to 0). Conexant recommends inclusion of an 8-level slider to control Saturation level. Each single movement of the slider should reprogram this bit field to a different fractional value. Lab testing has shown that values from ¾ gain (CATTENUATE=011) to 1.0 gain (i.e., 000) yield the crispest TV picture.

3.6.2.3 Brightness

Brightness is defined to be the intensity of the video level and refers to how much light is emitted from the display. The amount of Brightness is controlled by the register named Y_OFF[7:0].

Y_OFF[7:0] is a 2s complement number, such that a value of 0x00 is 0 IRE offset, a value of 0x7F is an increase of 22.14 IRE above black level. Active video will then be added to the offset level set by the Y_OFF value.

Since the difference between contrast and brightness is usually understood by video professionals only, Conexant recommends the designer increment or decrement the YATTENUATE[2:0] field for either brightness or contrast adjustments.

3.6.2.4 Hue

Hue refers to the wavelength of the color. That means that hue is the term used to represent the base color–red, green, magenta, yellow, and so forth. Hue is completely separate from the intensity or the saturation of the color. For example, a red hue could look brown at low saturation, fire-engine red at a higher level of saturation, or pink at a high brightness level. All three colors have the same hue however.

Occasionally, the end user may need to alter the hue. The method for adjusting this parameter with the CX25870/871 is to program a different value to the HUE_ADJ register. This method changes the hue in the composite and S-Video signals for NTSC, PAL, and SECAM waveforms according to the following equation:

Desired Phase Offset (in degrees) = [360° / 256] * (HUE_ADJ)

A slider labeled 'HUE' should be included in the GUI so minor alterations (±20°) in this parameter are possible. Major alterations(>20°) in the phase offset are not recommended since dramatic hue shifts will result in different colors than the original.

3.6.2.5 Sharpness

Occasionally, drastic phase shifts occur at the borders of dialog boxes within applications programs and with certain combinations of text and background colors. This is due to the primary and secondary colors being at opposite ends of the UV hue spectrum. The result of these phase differences is that the edges or text look blurry to the observer.

The CX25870/871 has a bit field available named PKFIL_SEL[1:0] to sharpen these edges so they look crisper on the television. Four choices are available, each of which enables a different type of peaking filter. The 0 dB (Bypass) filter is the defaulted level while gains of 1 dB, 2 dB, and 3.5 dB are also possible.

3.6.2.6 Dot Crawl

Dot crawl refers to a specific image artifact that is the result of the NTSC standard. When some computer generated text shows up on top of a video clip being shown, close viewing of the TV will show some pixels or jaggies rolling up or down the picture in the area of a dialog box's edges. Another term for this phenomenon is creepy-crawlies or the zipper effect.

Conexant has derived software code to minimize the dot crawl. This is not a register or bit within the CX25870/871 but rather a complicated software algorithm that modifies the 90-degree color subcarrier shift exhibited in four consecutive NTSC fields. To obtain this code, file a request with your local Conexant sales office. The algorithm/function for dot crawl should be enabled with the NTSC Composite output only. It will have no effect for PAL or SECAM outputs.

3.6.2.7 Standard and Adaptive Flicker Filter

Flicker occurs when the refresh rate of the video is too low. In digital encoders, flicker can also occur when processing an image that contains many fine vertical divisions such as lines that are only 1 or 2 lines wide. When the encoder stores, combines (by vertically interpolating data), and converts two consecutive incoming frames into 1 output field, portions of the image containing just a few lines can be placed on different analog output lines. Since the position of the output line is not equivalent from field to field, it appears to flicker at the vertical refresh rate.

This annoying artifact can be eliminated by selecting an appropriate flicker filter setting, one that trades off vertical resolution and text clarity against flicker reduction. The flicker filter slider shown in Figure 3-6 modifies the F_SELY[2:0] and F_SELC[2:0] bit fields together anytime the end-user changes the particular level. Internal testing has shown that certain application programs such as spreadsheets look best with more flicker filtering while others, such as games and DVD movies, look best with less. In addition, the active resolution also affects the amount of flicker filtering required. 640x480 and lower resolutions rarely require a maximum flicker filter setting, whereas the 1024x768 resolution often does.

With five standard flicker filter levels available, Conexant recommends programming the following bit values according to the slider level.

Flicker Filter Slider Level	F_SELY[2:0]	F_SELC[2:0]
Level 5 = Maximum	000 = 5 line. DIS_FFILT = 0.	011 = 4 line. DIS_FFILT = 0.
Level 4	011 = 4 line. DIS_FFILT = 0.	010 = 3 line. DIS_FFILT = 0.
Level 3	010 = 3 line. DIS_FFILT = 0.	001 = 2 line. DIS_FFILT = 0.
Level 2	001 = 2 line. DIS_FFILT = 0.	001 = 2 line. DIS_FFILT = 0.
Level 1 = Minimum	Do not care. DIS_FFILT = 1.	Do not care. DIS_FFILT = 1.

NOTE: The optimal performance for the Standard Flicker Filter is usually achieved by configuring F_SELC to 1 line less than F_SELY.

The CX25870/871 also has an adaptive flicker filter (i.e., Adaptive FF). This feature is explained in section 1 of the data sheet. The recommended TV Out Graphical User Interface allows the usage of the adaptive flicker filter only if the box to enable it is checked. Once this is done, the ADPT_FF bit should get set (=1).

Table 3-4. CX25870 Optimal Adaptive Flicker Filter Bit Settings by Active Resolution

	Adaptive Flicker Filter Bit/Bit Field Settings									Register 0x34	Register 0x36
Adaptive Flicker Filter Slider Level	**ADPT FF**	**Y ALTFF**	**C ALTFF**	**Y THRESH**	**C THRESH**	**Y SELECT**	**FFRTN**	**BYYCR**	**CHROMA BW**	**Final Hex Value**	**Final Hex Value**
Level 1=Min=640x480	On=Checked	4-line	4-line	000	000	On	On	1	0	9B	C0
Level 2	On=Checked	4-line	4-line	100	100	Off	Off	1	0	9B	24
Level 3 = 800x600	On=Checked	5-line	5-line	010	010	Off	On	1	0	80	92
Level 4	On=Checked	5-line	5-line	100	100	On	Off	1	0	80	64
Level 5=Max=1024x768	On=Checked	5-line	5-line	110	110	On	On	1	0	80	F6

When the Adaptive Flicker Filter is on, the Standard Flicker Filter continues to work normally. Indeed, many of the lines and/or pixels will still be filtered at the more moderate standard flicker filter level. However, as the encoder analyzes and processes each pixel, it will periodically come across certain regions requiring a more aggressive filter setting. For these areas only, more forceful Adaptive Flicker Filter value is used. With the dynamic ability of the CX25870, the end-user can enjoy an optimal TV Out environment without having to manually adjust the amount of flicker filtering depending on his given application. The CX25870 provides this functionality so long as the Adaptive Flicker Filter slider and control boxes are included. When the adaptive element is turned on, an additional five flicker reduction settings can be applied by moving the control pad to another level.

Through testing, Conexant recommends the following bit settings get reprogrammed according to the state of the Adaptive Flicker Filter slider.

Integrating both flicker filter sliders and the correct intelligence behind them makes the CX25870/871 ideal for Internet browsing, DVD movie watching, or game playing by overcoming many of the quality problems like image flicker, illegible text, and low-definition graphics that plague other TV encoders.

3.6.2.8 Position

There are many TV manufacturers, and most models display the active picture in a slightly different position relative to the bezel of the television itself. To allow the end-user the ability to position the TV picture directly in the middle of his screen, or any other reasonable location, Conexant recommends inclusion of several Position control buttons.

There should be four directional controls included; two for horizontal adjustment and two for vertical adjustment. For practical usage, the maximum or limit adjustment amounts should be 25 pixels horizontally and 10 lines vertically from the default position. Values greater than these cause a good portion of the active region to be hidden behind the bezel of the TV thus rendering this area useless.

From experience, Conexant recommends incrementing the graphics controller's HSYNC_START register by 5 pixels every time the LEFT(= '–') or RIGHT(= '+') button is clicked within the GUI. Every mouse click will also require reprogramming the CX25870/871's H_BLANKI register so the active data does not get chopped off on the opposite side.

Vertically, the software driver should add or subtract two lines from the prior vertical position every time the UP(= '+') or DOWN(= '–') button is clicked within the GUI. This means that the VSYNC_START register should be increased or decreased by two lines for every vertical click by the end-user. The corresponding modification that needs to be made to the CX25870/871 is an add/subtract of two lines to the original value in its V_BLANKI register.

As an illustration, assume the end user clicked on the Right button once. Internally, this action would mean that the graphics controller's new HSYNC_START register value needs to be $\{HSYNC_START_{default} - 5 \text{ pixels}\}$. As the timing master, this would force the controller to issue its HSYNC* digital signal's leading edge five pixel clock cycles earlier in time. The software engineer also must add five pixels to the controller's HSYNC_END register to maintain the original HSYNC* pulse duration (8–20 pixels is common). Finally, within the CX25870/871, the H_BLANKI[9:0] register must be increased by five pixels so the encoder can accommodate the five extra pixels of blanking to start each line and still display the original active portion of the line.

Now, assume the end-user clicked on the Down button once. This action dictates that more blanking will exist before the active region is displayed. This operation requires decrementing the graphics controller's new VSYNC_START register value to ($VSYNC_START_{default}$ - 5 lines). As the timing master, this would force the controller to issue its VSYNC* digital signal's leading edge five lines earlier in time than before. The software engineer must also subtract five lines to the controller's VSYNC_END register to maintain the same VSYNC* pulse duration (nominally two-to-six lines). Within the encoder, the V_BLANKI[7:0] register must be incremented by 5 lines so the encoder can accommodate the five more lines of blanking required to start the field and still display the original active area of the frame.

For an explanation of the Left and Up buttons, simply apply the opposite offsets to the values explained for the Right and Down operations. Remember that SYNC_START/END always works in the opposite direction of picture movement. If the Position control works correctly, the end user should see a gradual change to either the X and Y position of the active image after each corresponding mouse click.

3.6.2.9 Size

This control pad is used by the end-user to change the active X and Y dimensions of the TV Out picture. This is done by modifying the amount of horizontal (X dimension) and vertical (Y dimension) overscan compensation. Ideally, there should be four directional controls included: two for horizontal adjustment and two for vertical adjustment. For practical usage, the maximum amounts of Horizontal Overscan Compensation (HOC) and Vertical Overscan Compensation (VOC) should be limited to 25 percent (or three mouse clicks in any direction). The minimal amounts of HOC and VOC should be capped at 10 percent since percentages smaller than this often make the TV image so large that all edges are behind the bezel of the TV, rendering the outer regions of the Windows desktop useless.

Based on testing, Conexant recommends changing the HOC percentage by ~ 3 percent from its previous value for each'+ or – horizontal mouse click within the GUI. The + symbol denotes a larger picture size in that direction (and a decrease in the amount of horizontal blanking or HOC percent) and a - sign corresponds to smaller picture size.

In addition, TV Out software designers should vary the VOC percentage by ~ 3 percent from its previous value for each + or – vertical mouse click within the GUI. The + symbol denotes a larger picture size in that direction and a – sign corresponds to smaller picture size (and an increase in the amount of vertical blanking or VOC percent).

The overscan percentages horizontally and vertically are independent of each other. However, the TV Out picture looks best when HOC and VOC are equal or within 2 percent of each other. Having realized this fact, Conexant has incorporated many autoconfiguration modes that have a minimal difference (i.e., Delta) between the HOC and VOC ratios.

The autoconfiguration modes for the CX25870/871 that pertain to the desktop resolutions are summarized in Figures 3-5 through 3-12.

Figure 3-7. CX25870/871 Autoconfiguration Modes for 640x480 RGB In, NTSC Out Desktop Resolutions

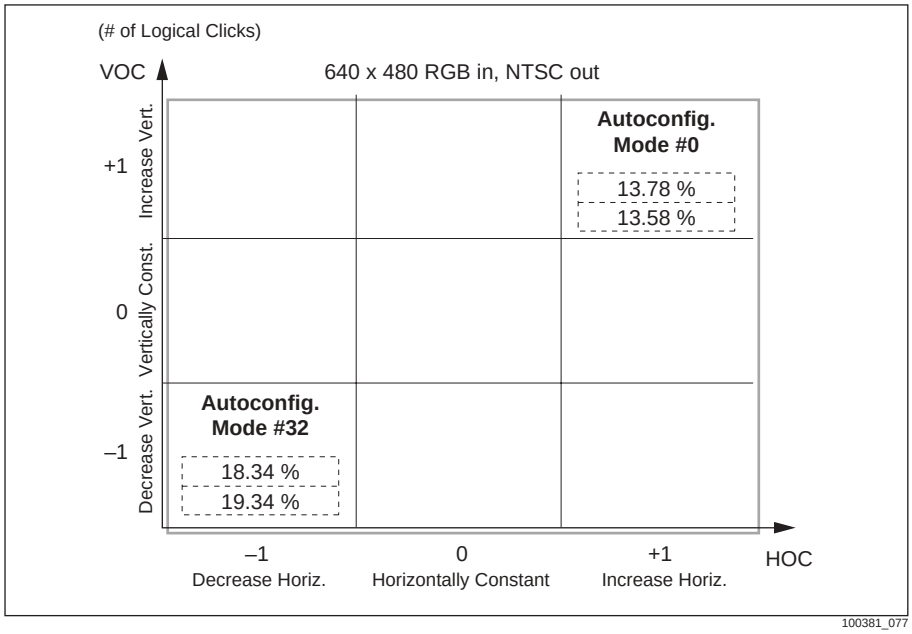

Figure 3-8. CX25870/871 Autoconfiguration Modes for 640x480 RGB In, PAL-BDGHI Out Desktop Resolutions

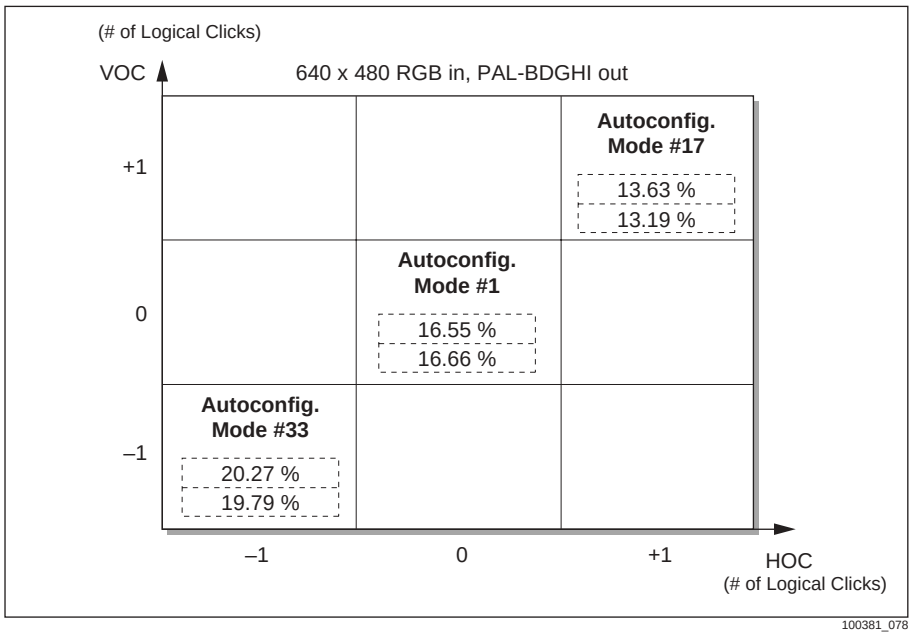

Figure 3-9. CX25870/871 Autoconfiguration Modes for 800 x 600 RGB In, NTSC Out Desktop Resolutions

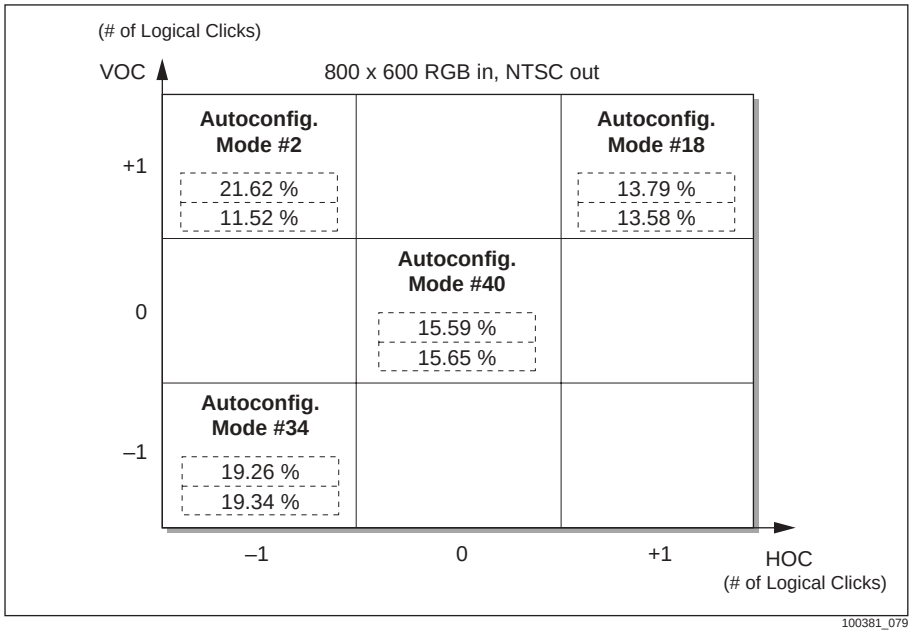

Figure 3-10. CX25870/871 Autoconfiguration Modes for 800 x 600 RGB In, PAL-BDGHI Out Desktop Resolutions

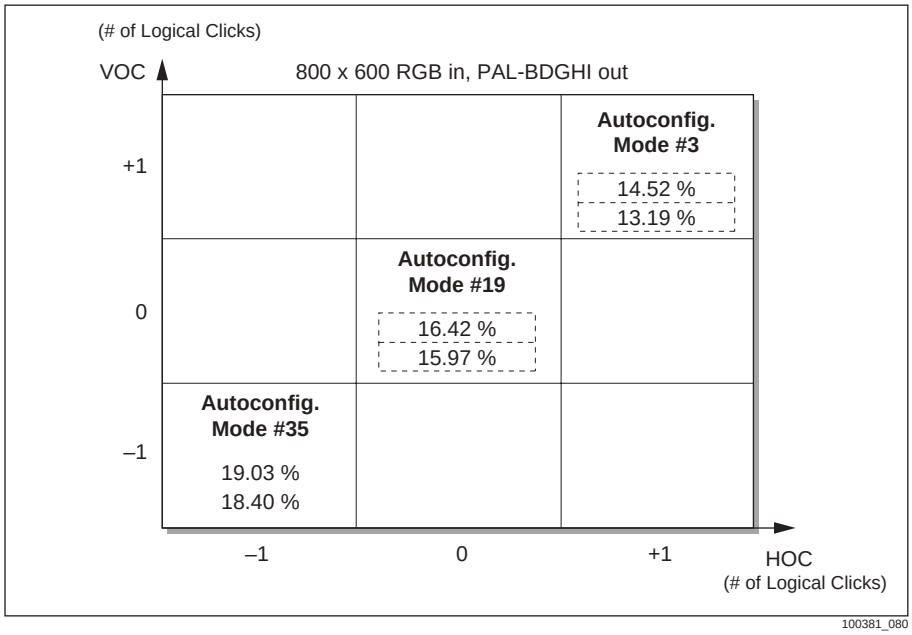

Figure 3-11. CX25870/871 Autoconfiguration Modes for 1024 x 768 RGB In, NTSC Out Desktop Resolutions

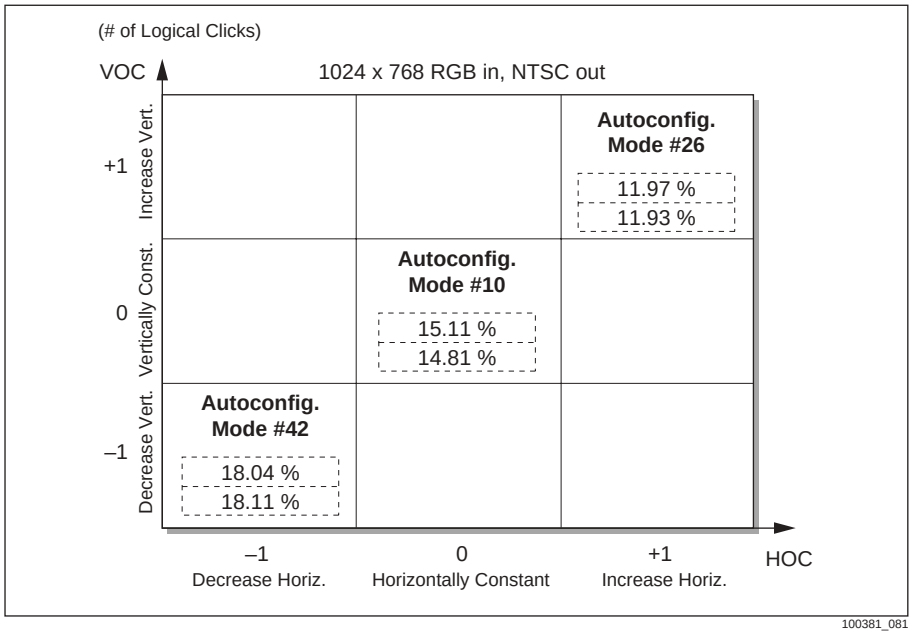

Figure 3-12. CX25870/871 Autoconfiguration Modes for 1024 x 768 RGB In, PAL-BDGHI Out Desktop Resolutions

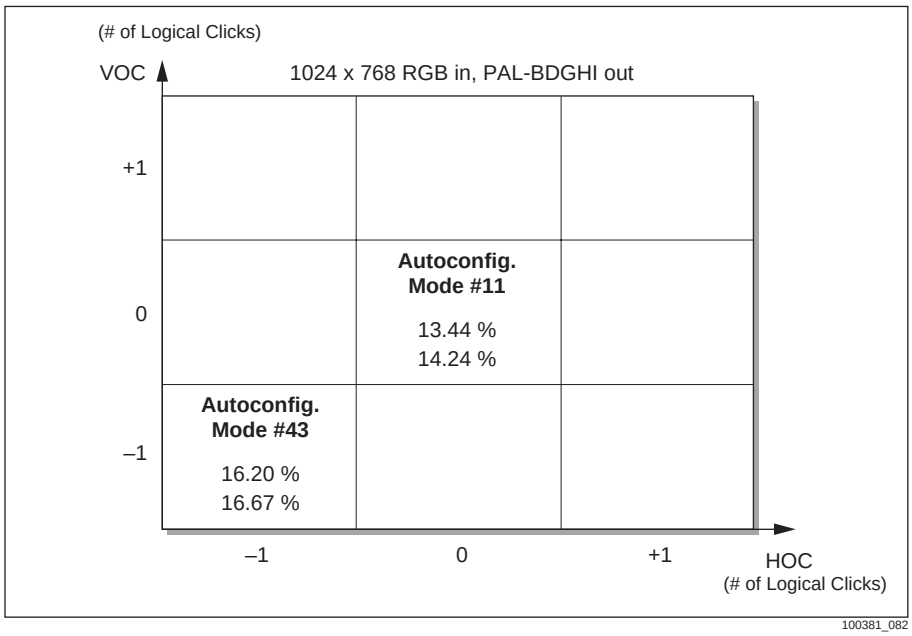

Customers are urged to enable the autoconfiguration mode that is in the middle of each chart as the default Size for each active resolution. To accomplish this, the encoder's CONFIG[5:0] bit field must be programmed to the desired mode. In addition, the graphics controller's HTOTAL register must be programmed to match the CX25870/871's H_CLKI[10:0] value, and VTOTAL register must be programmed to match the CX25870/871's V_LINESI[10:0] value. Other minor modifications may be necessary. The specific procedure to follow to enable different overscan ratios is explained in an application note titled *Supporting TV Out with Non-Standard Graphics Input Resolutions*. Request this document from your local Conexant Sales representative for help on the Size video adjustment.

A simpler alternative to independent horizontal and vertical size buttons is to replace the directional control pad with a slider. This slider would only have 3 tick marks and would cycle through the different sizes available based on the autoconfiguration modes that exist for the specific desktop resolution and video output type. This concept is illustrated in Figure 3-13.

Figure 3-13. Direction-less Size Control Pad

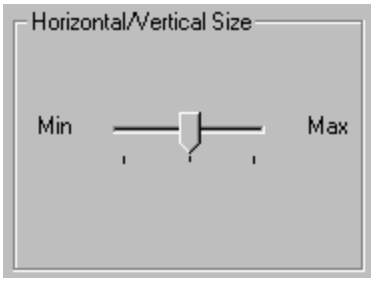

The slider would alter the horizontal and vertical size of the TV picture simultaneously by changing the overscan percentages by the same amount. Size control should only be effective for desktop resolutions such as 640x480, 800x600, and 1024x768. Nonstandard resolutions should choose a single size with a moderate amount of overscan compensation (HOC/VOC = 11 percent–16 percent) and not allow the end-user to deviate from this choice by graying out the Size slider.

3.6.3 System Block Diagrams

The CX25870/871 can be designed into any system that requires analog standard definition television outputs (NTSC/PAL/SECAM/SCART) or high definition television outputs (YP_BP_R/HD RGB) based on a digital RGB or YCrCb set of inputs.

The following system block diagrams are meant to illustrate several common applications which presently utilize the CX25870/871 encoder.

Figure 3-14. System Block Diagram for Desktop/Portable PC with TV Out

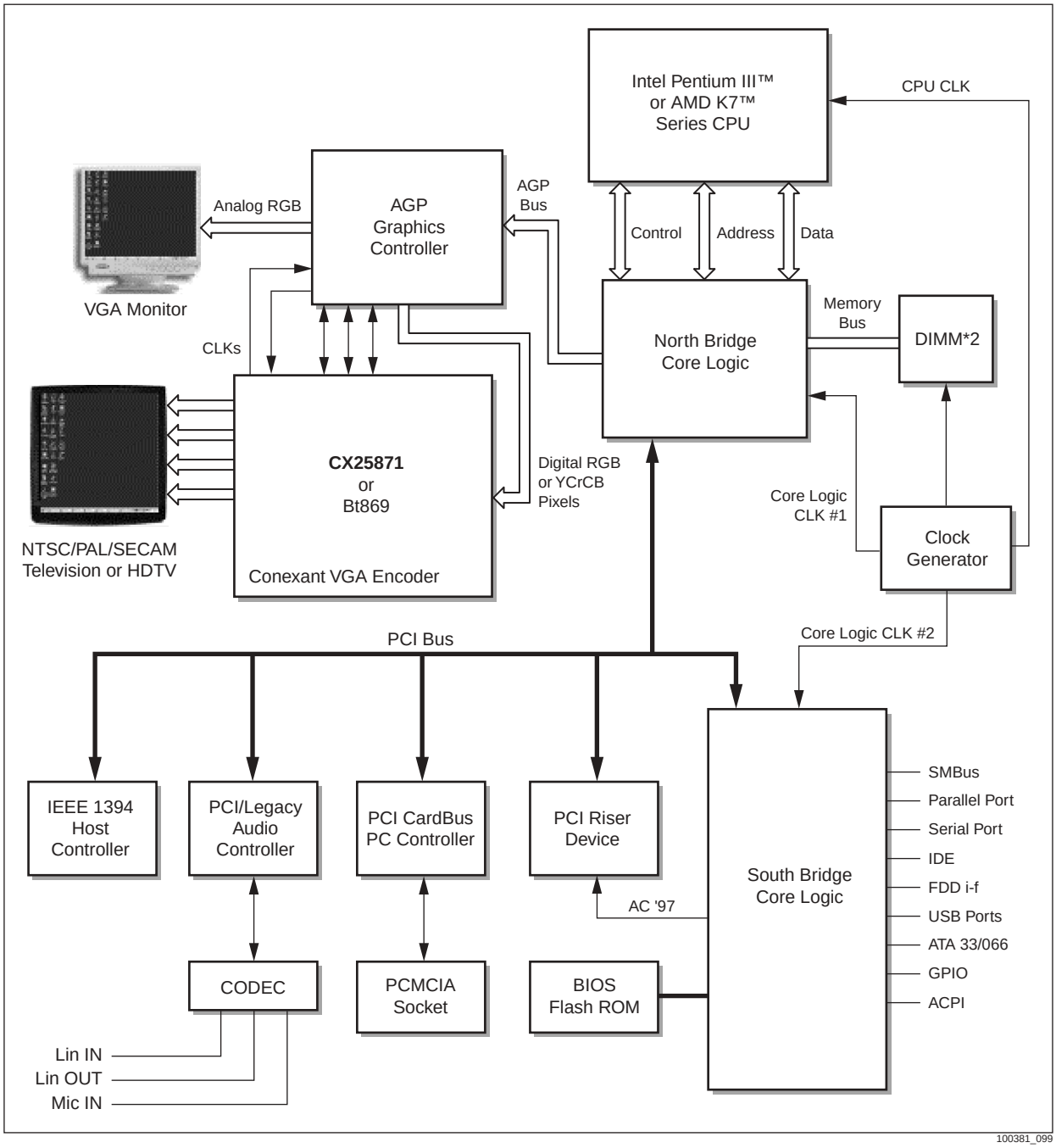

Figure 3-15. System Block Diagram for Graphics Card with TV Out

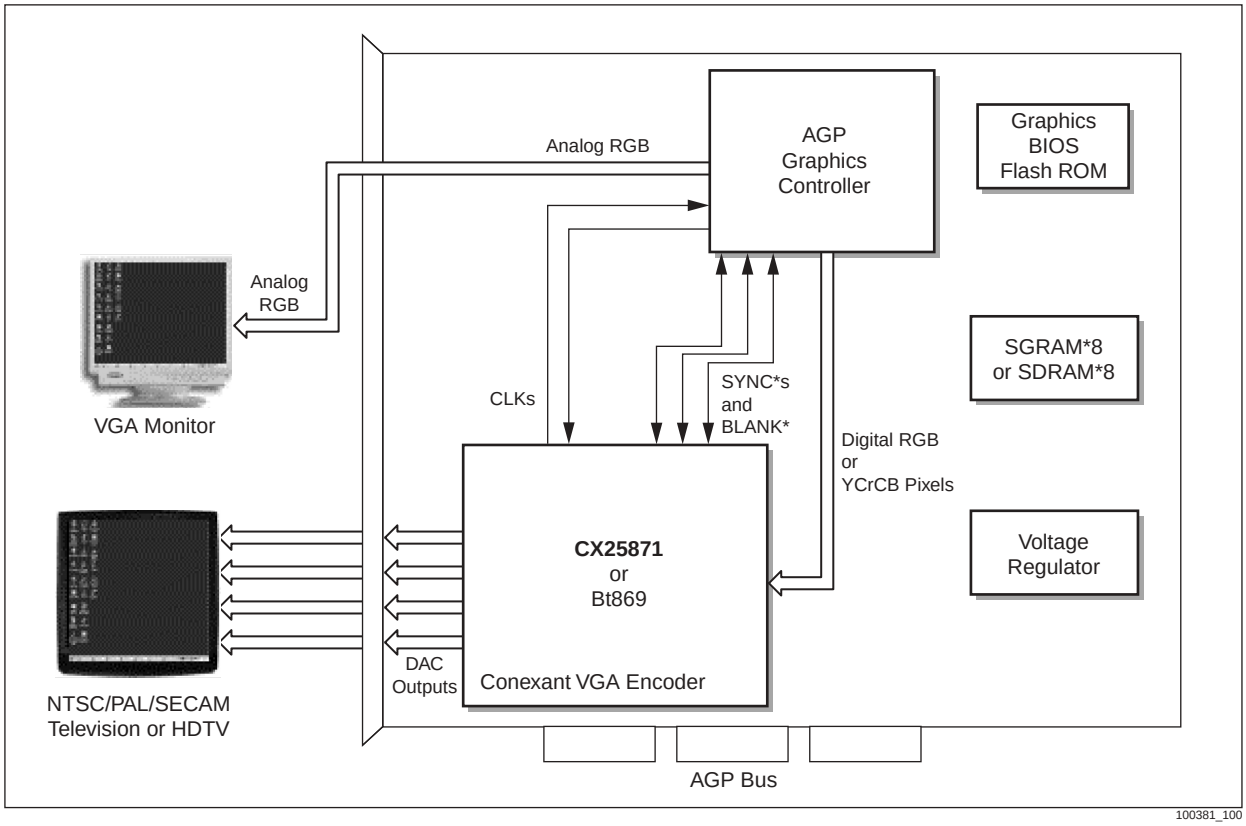

3.6.4 Electrostatic Discharge and Latchup Considerations

Correct electrostatic discharge (ESD)-sensitive handling procedures are required to prevent device damage. Device damage can produce symptoms of catastrophic failure or erratic device behavior with leaky inputs.

All logic inputs should be held low until power to the device has settled to the specified tolerance. DAC power decoupling networks with large time constants should be avoided; they could delay VAA and VDD power to the device. Ferrite beads must be used only for analog power VAA decoupling. Inductors cause a time-constant delay that induces latchup, and should not be substituted for a ferrite bead.

Latchup can be prevented by ensuring that all VAA and VDD pins are at the same potential and by forcing all AGND and VSS pins to be at the same potential. The VAA and VDD supply voltage must be applied before the signal pin voltages. The correct power-up sequence ensures that any signal pin voltage will never exceed the power supply voltage.

3.6.5 Clock and Subcarrier Stability

The color subcarrier frequency is derived directly from the XTALIN/XTALOUT ports when EN_XCLK=0. The color subcarrier frequency is derived directly from the main clock input, CLKI, when EN_XCLK=1 (slave interface). In either case any jitter or frequency deviation from 13.500 MHz (XTALIN/XTALOUT) or the CLKI (slave interface) rate will be transferred directly to the color subcarrier. Jitter within the valid clock cycle interval will result in hue noise on the color subcarrier on the order of 0.9–1.6 degrees per nanosecond. Random hue noise can result in degradation in the AM/PM noise ratio (typically around 40 dB for consumer media such as Videodiscs and VCRs). Periodic or coherent hue noise can result in differential phase error (which is limited to 10 degrees by FCC cable TV standards).

Any frequency deviation of CLKI from the transmitted clock (i.e., CLKO) will challenge the subcarrier tracking capability of the destination receiver. This may range from a few parts-per-million (ppm) for broadcast equipment, to 100 ppm for industrial equipment and to >100 ppm for consumer equipment. Greater subcarrier tracking range generally results in poorer subcarrier decoding dynamic range. So, receivers that tolerate jitter and wide subcarrier frequency deviation will introduce more noise in the decoded image. Crystal-based clock sources with a maximum total deviation of 50 ppm (NTSC) or 25 ppm (PAL, SECAM) across the temperature range of 0 °C to 70 °C produce the best results for consumer and industrial applications. In rare cases, temperature-compensated clock sources with tighter tolerances may be warranted for broadcast or more stringent PAL (e.g., type I) applications.

Some applications call for maintaining correct Subcarrier-Horizontal (SC-H) phasing for correct color framing. This requires subcarrier coherence within specified tolerances over a four-field interval for 525-line systems or 8 fields for 625-line systems. Any clock interruption (even during vertical blanking interval) which results in mis-registration of the CLKI input or nonstandard pixel counts per line, can result in SC-H excursions outside the NTSC limit of ±40 degrees (reference EIA RS170A) or the PAL limit of ±20 degrees (reference EBU D23-1984).

In slave interface, any deviation exceeding the 50 ppm (NTSC) or 25 ppm (PAL, SECAM) limits of the number clock cycles between HSYNC* falling edges may result in a switch to Master Mode.

A list of recommended crystals and crystal vendors is contained in Appendix B.

3.6.6 Filtering Radio Frequency Modulator Connection

The CX25870/871 internal upsampling filter alleviates external filtering requirements by moving significant sampling alias components above 19 MHz and reducing the sinx/x aperture loss up to the filter's passband cutoff of 5.75 MHz. While typical chrominance subcarrier decoders can handle the CX25870/871 output signals without analog filtering, the higher frequency alias products pose some EMI concerns and may create troublesome images when introduced to a radio frequency (RF) modulator. When the video is presented to an RF modulator, it should be free of energy in the region of the aural subcarrier (4.5 MHz for NTSC, 5.5–6.5 MHz for PAL). Hence some additional frequency traps may be necessary when the video signal contains fundamental or harmonic energy (as from unfiltered character generators) in that region. Where better frequency response flatness is required, some peaking in the analog filter is appropriate to compensate for residual digital filter losses with sufficient margin to tolerate 10 percent reactive components.

A three-pole elliptic filter (one inductor, three capacitors) with a 6.75 MHz passband can provide at least 45 dB attenuation (including sinx/x loss) of frequency components above 20 MHz and provide some flexibility for mild peaking or special traps. An inductor value with a self-resonant frequency above 80 MHz is chosen so that its intrinsic capacitance contributes less than 10 percent of the total effective circuit value. The inductor itself may induce 1 percent (0.1 dB) loss. Any additional ferrites introduced for EMI control should have less than 5 Ω impedance below 5 MHz to minimize additional losses. The capacitor to ground at the CX25870/871 output pin is compensating for the parasitic capacitance of the chip plus any protection diodes and lumped circuit traces (about 22 pF + 5 pF/diode). Some filter peaking can be accomplished by splitting the 75 Ω source impedance across the reactive PI filter network. However, this will also introduce some chrominance-luminance delay distortion in the range of 10–20 ns for a maximum of 0.5 dB boost at the subcarrier frequency.

The filter network feeding an RF modulator may include the aforementioned trap, which could take two forms depending on the depth of attenuation and type of resonator device employed.

The trap circuitry can interact with the low-pass filter, compromising frequency response flatness. A simple PNP buffer can preserve the benefits of an oversampling encoder when simultaneous Composite Video Baseband Signals (CVBS) are required for driving external cables. In addition, an active video buffer, serves to isolate the RF modulator signal amplitude from anomalies in the external termination. This buffer can be implemented with a transistor array or video amplify IC which provides a gain of two (before series termination), capable of driving 740 µA into the 75 Ω destination, and is biased within its input/output compliance range. When simultaneous Y/C (s-video) outputs are not required, a second CVBS signal can be created (with a 600 mV sync to tip offset) by tying these pins together with a single termination resistor (typically 75 Ω) and driving the low-pass filter circuit.

The RF modulator typically has a high input impedance (about 1 k Ω ±30 percent) and loose tolerance. Consequently, the amplitude variation at the modulator input will be greater, especially when the trap is properly terminated at the modulator input for maximum effect. Some modulators, video or aural fidelity, degrade dramatically when overdriven, so the value of the effective termination (nominally 37.5 Ω) may need to be adjusted downward to maintain sufficient linearity (or depth of modulation margin) in the RF signal.

A two-section trap (with associated inductor) may be warranted to achieve better than 20 dB attenuation when stereo, SAP, or AM aural carriers are generated, or when >40 dB audio dynamic range is desired. Some impedance isolation (e.g., buffer) may be required before the trap to obtain the flattest frequency response.

3.7 CX870EVK Evaluation Kit

A new reference design kit is available now to facilitate implementation of Conexant's VGA encoder into a graphics subsystem. This kit is called the ***GeForce2 MX-400 CX870EVK*** and can be obtained through your local Conexant Systems sales office.

The new CX25870 Evaluation Kit uses the NVidia P36 model reference design AGP card, containing the popular NVidia GeForce2 MX-400™ graphics-processing unit (GPU), as a high-performance data master to provide digital data to the CX25870 PC video encoder. The Conexant device has been mounted directly on this graphics card along with all necessary passive components (resistors, capacitors, inductors, video connectors, etc.) to ensure proper device operation. This two-chip combination is controlled by a set of drivers for the graphics accelerator written by NVidia and a separate Windows program called Super Cockpit created by Conexant that allows direct manipulation of the encoder device by circumventing the driver software. All the necessary documents and cables have been within the kit as well. The multipronged DV-H cable from JIC USA is included with the kit and will be necessary for viewing of HDTV, 480i Component Video Out, S-Video, Composite, and any other TV output from the CX25870 encoder.

To obtain the necessary CX870EVK software, find a PC with Internet access and visit the CX25870 https://site. For the site address, username, and password, contact your local Conexant Systems sales office. Once you have been given user identification information, you can download the GeForce2 MX-400 CX870EVK instruction manual, Super Cockpit, test images, and other pertinent software.

The CX870EVK was designed to be both a demonstration unit and development unit depending on a customer's needs. For demonstration purposes, many script files have been created and will be automatically extracted and placed into a /ScriptFiles subdirectory under the CX870EVK's main directory. To execute a script file, launch a DOS-BOX, type the desired script filename (without the extension) on the command line, and then press the <ENTER> key. After execution, the script file will have configured both the CX25870 encoder and the GeForce2 MX-400 graphics controller to a specific mode in terms of resolution and video output. This is the most effective method for achieving the optimal TV Out picture quickly.

For development purposes, several new pages have been added to Super Cockput including the handy Clipboard pages which allow the end-user to try out register values and restore them if the result is not desirable. All registers can be read from as well—an improvement over the Bt868/9. Write access to all the new bits and registers found within the CX25870 are also possible. Note that the GeForce2 MX-400 controller supports the CX25870 in a pseudo-master interface. As a result, HDTV YP_RP_B Output is possible with the GeForce2 MX-400 CX870EVK kit.

In addition, the ability to switch between the most popular desktop resolutions (640x480, 800x600, and 1024x768) and video output types (NTSC/PAL/SECAM) is much simpler now than with the original Bt868EVK. Finally, sliders commonly found on TV Out Display Properties pages such as brightness, contrast, saturation, flicker filtering and hue have been integrated into the Super Cockpit application itself on the Display page. Users are encouraged to manipulate these controls to achieve their desired TV outputs and save the encoder settings for future usage.

3.8 Serial Interface

3.8.1 Data Transfer on the Serial Interface Bus

Figure 3-16 illustrates the relationship between SID (Serial Interface Data) and SIC (Serial Interface Clock) to be used when programming the internal registers via the Serial Interface bus. If the bus is not being used, both SID and SIC lines must be left high.

Every byte put onto the SID line should be 8 bits long (MSB first), followed by an acknowledge bit, which is generated by the receiving device. Each data transfer is initiated with a start condition and ended with a stop condition. The first byte after a start condition is always the slave device address byte. If this is the device's own address, the device will generate an acknowledge by pulling the SID line low during the ninth clock pulse, then accept the data in subsequent bytes (auto-incrementing the subaddress) until another stop condition is detected.

The eighth bit of the address byte is the read/write bit (high = read from addressed device; low = write to the addressed device). Data bytes are always acknowledged during the ninth clock pulse by the addressed device.

NOTE: During the acknowledge period, the transmitting device must leave the SID line high.

Premature termination of the data transfer is allowed by generating a stop condition at any time. When this happens, the CX25870/871 will remain in the state defined by the last complete data byte transmitted and any master acknowledge subsequent to reading the chip ID (subaddress 0x89 if ALTADDR pin is 0) is ignored.

The maximum serial interface speed for the CX25870/871 is 400 kHz.

Figure 3-16. SID/SIC Serial Programming Diagram

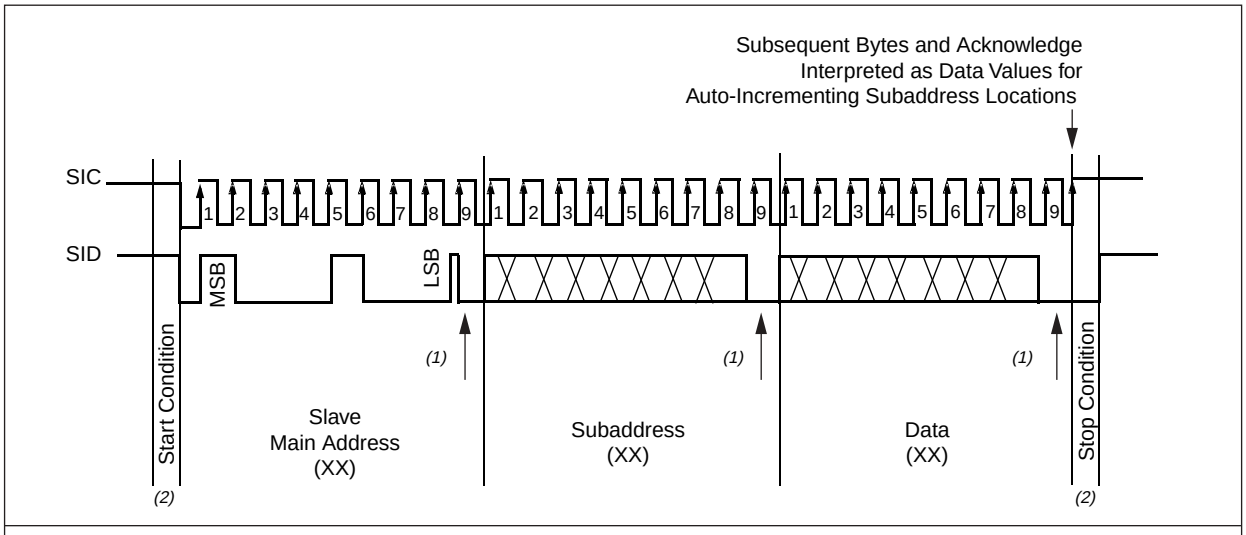

NOTE(S):
(1) ACK = Acknowledge generated by CX25870/871.
(2) Conditions generated by master device.

100381_021

4.0 Parametric Information

4.1 DC Electrical Parameters

DC electrical parameters are defined in Tables 4-1 through 4-3. AC electrical parameters are defined in Table 4-4. Figures 4-1 through 4-10 provide timing diagrams.

Table 4-1. Recommended Operating Condition

Parameter	Symbol	Min	Typical	Max	Units
Power Supply	VAA, VDD	3.15	3.30	3.45	V
Serial Input Supply (CX25870/871's serial bus always operates at 3.3 V.)	VDD_SI	3.15	3.30	3.45	V
Low Voltage Supply (For interface to 1.8 V master)	VDDL, VDD_CO	1.71	1.80	1.89	V
Low Voltage Supply (For interface to 1.5 V master)	VDDL, VDD_CO	1.425	1.50	1.575	V
Low Voltage Supply (For interface to 1.3 V master)	VDDL, VDD_CO	1.235	1.30	1.365	V
Low Voltage Supply (For interface to 1.1 V master)	VDDL, VDD_CO	1.045	1.10	1.155	V
Voltage Supply (For interface to 3.3 V master)	VDDL, VDD_CO	3.15	3.30	3.45	V
Ambient Operating Temperature	T_A	0	—	70	°C
Total DAC Terminated Load	R_{TERM}	—	37.5	—	Ω
Nominal RSET	R_{SET}	74.25	75.0	75.75	Ω

Table 4-2. Absolute Maximum Rating

Parameter	Symbol	Min	Typ	Max	Units
VAA, VDD (measured to GND)	—	—	—	7.0	V
VDD_SI (measured to GND)	—	—	—	7.0	V
Voltage on Any Signal Pin *(1)*	—	GND –0.5		VDD_SI+ 0.5	V
Analog Output Short Circuit Duration to Any Power Supply or Common Ground	I_{SC}	—	—	Unlimited	Sec
Storage Temperature	T_S	–65	—	+150	°C
Junction Temperature	T_J	—	—	+125	°C
Vapor Phase Soldering (1 Minute)	T_{VSOL}	—	—	220	°C
Thermal Resistance of Package	θ_{JA}	—	38.5	—	°C/W

NOTE(S):

1. This device employs high-impedance CMOS circuitry on all signal pins. It should be handled as an ESD-sensitive device. Voltage on any signal pin that exceeds the power supply or ground voltage by more than 0.5 V can cause destructive latchup.
2. Stresses above those listed under “Absolute Maximum Ratings” can cause permanent damage to the device. This is a stress rating only, and functional operation of the device at these or any other conditions above those listed in the operational sections of this specification is not implied. Exposure to absolute maximum rating conditions for extended periods can affect device reliability.

Table 4-3. DC Characteristics for CX25870/871

Parameter	Symbol	Min	Typical	Max	Units
Video D/A Resolution	—	10	10	10	Bits
Output Current-DAC Code 1023 (Iout Full Scale)	—	—	34.13	—	mA
Output Voltage-DAC Code 1023	—	—	1.28	—	V
Video Level Error (Nominal Resistors)	—	—	—	5	%
Output Capacitance (of DAC output)	—	—	22	—	pF
Input High Voltage @ 3.3 V (Normal Operation)	VIH	2.0	—	VDD + 0.5	V
Input High Voltage @ 1.8 V (Low voltage pins only)	VIH	1.0	—	VDDL + 0.5	V
Input High Voltage @ 1.1 V (Low voltage pins only)	VIH	0.7	—	VDDL + 0.5	V
Input Low Voltage @ 3.3 V (Normal Operation)	VIL	GND–0.5	—	0.8	V
Input Low Voltage @ 1.8 V (Low voltage pins only)	VIL	GND – 0.5	—	0.45	V
Input Low Voltage @ 1.1 V (Low voltage pins only)	VIL	GND – 0.5	—	0.2	V
Input High Current (Vin = 2.4 V)	IIH	—	—	1	µA
Input Low Current (Vin = 0.4 V)	IIL	—	—	–1	µA
Input Capacitance (f =1 MHz, Vin = 2.4 V)	CIN	—	7	—	pF
Input High Voltage (SIC, SID)	VIH	0.7* VDD	—	VDD + 0.5	V
Input Low Voltage (SIC, SID)	VIL	GND – 0.5	—	0.3 * VDD	V
Input High Voltage (CLKI)	VIH	2.4	—	VDD_I + 0.5	V
Input Low Voltage (CLKI)	VIL	GND – 0.5	—	0.8	V
Output High Voltage (IOH = –400 µA)	VOH	2.4	—	VDD	V
Output Low Voltage (IOL = 3.2 mA)	VOL	GND	—	0.4	V
Three-State Current	IOZ	—	—	50	µA
Output Capacitance	CDOUT	—	10	—	pF
NOTE(S): The above parameters are guaranteed over the full temperature range (0 °C to 70 °C), temperature coefficients are not specified or required. Typical values are based on nominal temperature, i.e., room temperature, and nominal voltage, i.e., 3.3 V.					

4.2 AC Electrical Parameters

Table 4-4. AC Characteristics for CX25870/871 (1 of 3)

Parameter	EIA/TIA 250C Ref	CCIR 567	Symbol	Min	Typical	Max	Units
Hue Accuracy(2)	—	—	—	1.05	1.45	1.64	deg p–p
Chroma Amplitude Accuracy(2)	—	—	—	0.42	1.15	1.64	% p–p
Chroma AM Noise	1 MHz Red Field	—	—	–65.70	–64.90	–62.40	dB rms
Chroma PM Noise	1 MHz Red Field	—	—	–54.40	–50.70	–47.90	dB rms
Differential Gain	6.2.2.1	C3.4.1.3	—	0.26	0.5	0.7	% p–p
Differential Phase	6.2.2.2	C3.4.1.4	—	0.64	0.71	1.19	deg p–p
RMS SNR (Unweighted 100 IRE Y Ramp Tilt Correct)	6.3.1	—	—	–53.70	–51.04	–46.9	dB rms
Peak Periodic SNR @ 3.58 MHz	6.3.2	—	—	–82.7	–79.2	–73.4	dB p–p
100 IRE Multiburst	6.1.1	—	—	101.9	103.5	105.4	IRE
Multiburst @ 0.50 MHz	—	—	—	–0.15	–0.1	–0.06	dB
Multiburst @ 1.25 MHz	—	—	—	–0.27	–0.21	–0.16	dB
Multiburst @ 2.00 MHz	—	—	—	–0.45	–0.36	–0.31	dB
Multiburst @ 3.00 MHz	—	—	—	–0.73	–0.61	–0.54	dB
Multiburst @ 3.58 MHz	—	—	—	–0.88	–0.74	–0.66	dB
Multiburst @ 4.05 MHz	—	—	—	–1.03	–0.89	–0.81	dB
Chroma/Luma Gain Ineq	6.1.2.2	C3.5.3.1	—	94.8	96.2	97.1	%
Chroma/Luma Delay Ineq	6.1.2	C3.5.3.2	—	–7.00	–3.04	–0.20	ns
Short Time Distortion 100 IRE/PIXEL rising edge	6.1.6	—	—	1.70	1.79	2.0	%
Luminance Nonlinearity	6.2.1	—	—	0.20	0.82	1.5	% p–p
Chroma/Luma Intermod	6.2.3	—	—	0.00	0.28	0.5	%
Chroma Nonlinear Gain	6.2.4.1	—	—	–1.9	–1.59	–1.30	%
Chroma Nonlinear Phase	6.2.4.2	—	—	0.10	0.53	1.30	deg
Pixel/Control Setup Time (SETUP_HOLD_ADJ bit = 0)	—	—	1	3	—	—	ns
Pixel/Control Setup Time (SETUP_HOLD_ADJ bit = 1)	—	—	1	1.25	—	—	ns

Table 4-4. AC Characteristics for CX25870/871 (2 of 3)

Parameter	EIA/TIA 250C Ref	CCIR 567	Symbol	Min	Typical	Max	Units
Pixel/Control Hold Time (SETUP_HOLD_ADJ bit = 0)	—	—	2	0	—	—	ns
Pixel/Control Hold Time (SETUP_HOLD_ADJ bit = 1)	—	—	2	1.5	—	—	ns
Control Output Delay Time(4)	—	—	3	—	—	10.0	ns
Control Output Hold Time(4)	—	—	4	2	—		ns
CLKI/O Frequency (standard mode)	—	—	—	—	—	53.3333	MHz
CLKI/O Pulse Width Low Duty Cycle(3)	—	—	—	40	50	60	%
CLKI/O Pulse Width High Duty Cycle(3)	—	—	—	40	50	60	%
CLKO to CLKI Delay	—	—	7	—	—	0.8	CLKO cycles
SLAVE to HSYNC*/VSYNC* Three-state(3)	—	—	5	2	—	—	CLKI cycles
SLAVE to HSYNC*/VSYNC* Active(3)	—	—	6	—	—	2	CLKI cycles
VAA Supply Current (minimum 3 DACS on)(8)	—	—	—	—	190	—	mA
VDD Supply Current (minimum 3 DACS on)(8)	—	—	—	—	220	—	mA
Total Supply Current (minimum 3 DACS on)(8)	—	—	—	—	410	—	mA
Power-Down Current	—	—	—	—	3(7)	—	mA
Power-Down Current (need a Hardware RESET to bring the part up)	—	—	—	—	1.5(6)	—	mA

Table 4-4. AC Characteristics for CX25870/871 (3 of 3)

HDTV Output Timing Characteristics: 1080i (see Figure 4-9)					
Parameter	**Symbol**	**Min**	**Typical**	**Max**	**Units**
Lowsync width	α	—	598.8	—	ns
Start of line to end of active video	β	—	28.385	—	µs
Highsync width	χ	—	598.8	—	ns
Rising edge of sync to start of broad pulse	δ	—	1.796	—	µs
Start of line to start of active video	ε	—	2.588	—	µs
Sync rise time	ϕ	—	54.5	—	ns
Total line time	—	—	29.685	—	µs
Active line time	—	—	25.778	—	µs
HDTV Output Timing Characteristics: 720p (see Figure 4-10)					
Parameter	**Symbol**	**Min**	**Typical**	**Max**	**Units**
Lowsync width	a	—	548	—	ns
Start of line to end of active video	b	—	20.54	—	µs
High sync width	c	—	548	—	ns
Rising edge of sync to start of broad pulse	d	—	3.53	—	µs
Rising edge of sync to start of active video	e	—	3.53	—	µs
Sync rise time	—	—	54.7	—	ns
Total line time	—	—	22.2	—	µs
Active line time	—	—	17.16	—	µs

NOTE(S):

1. Guaranteed by characterization; NTSC output, no vertical or horizontal scaling. Flicker Filter and other internal low-pass filters bypassed, and contrast, brightness, saturation levels set to full scale.

(2) 100/7.5/100/7.5 Color bars normalized to burst.

(3) Guaranteed by design.

(4) Control pins are defined as: BLANK*, HSYNC*, VSYNC*, FIELD, CLKO, CLKI, RESET*, PAL, and SLAVE.

(5) DAC output load ≤ 75 pF. HSYNC*, VSYNC*, BLANK*, and FIELD output load ≤ 75 pF. As the above parameters are guaranteed over the full temperature range, temperature coefficients are not specified or required. Typical values are based on nominal temperature, i.e., room temperature, and nominal voltage, i.e., 3.3 V.

(6) There are numerous power-down options. This value was determined by setting SLEEP_EN, DIS_CLKI, DIS_CLKO, BY_PLL, XTL_BFO_DIS, XTAL_PAD_DIS bits and pulling the SLEEP pin high.

(7) This value was determined by setting BY_PLL, SLEEP_ED, DIS_CLKI, DIS_CLKO, XTAL_BFO_DIS bits.

(8) To ensure that the encoder performance falls within DC and AC electrical limits, no more than one DAC should be disabled at any time.

Figure 4-1. Timing Details for All Interfaces

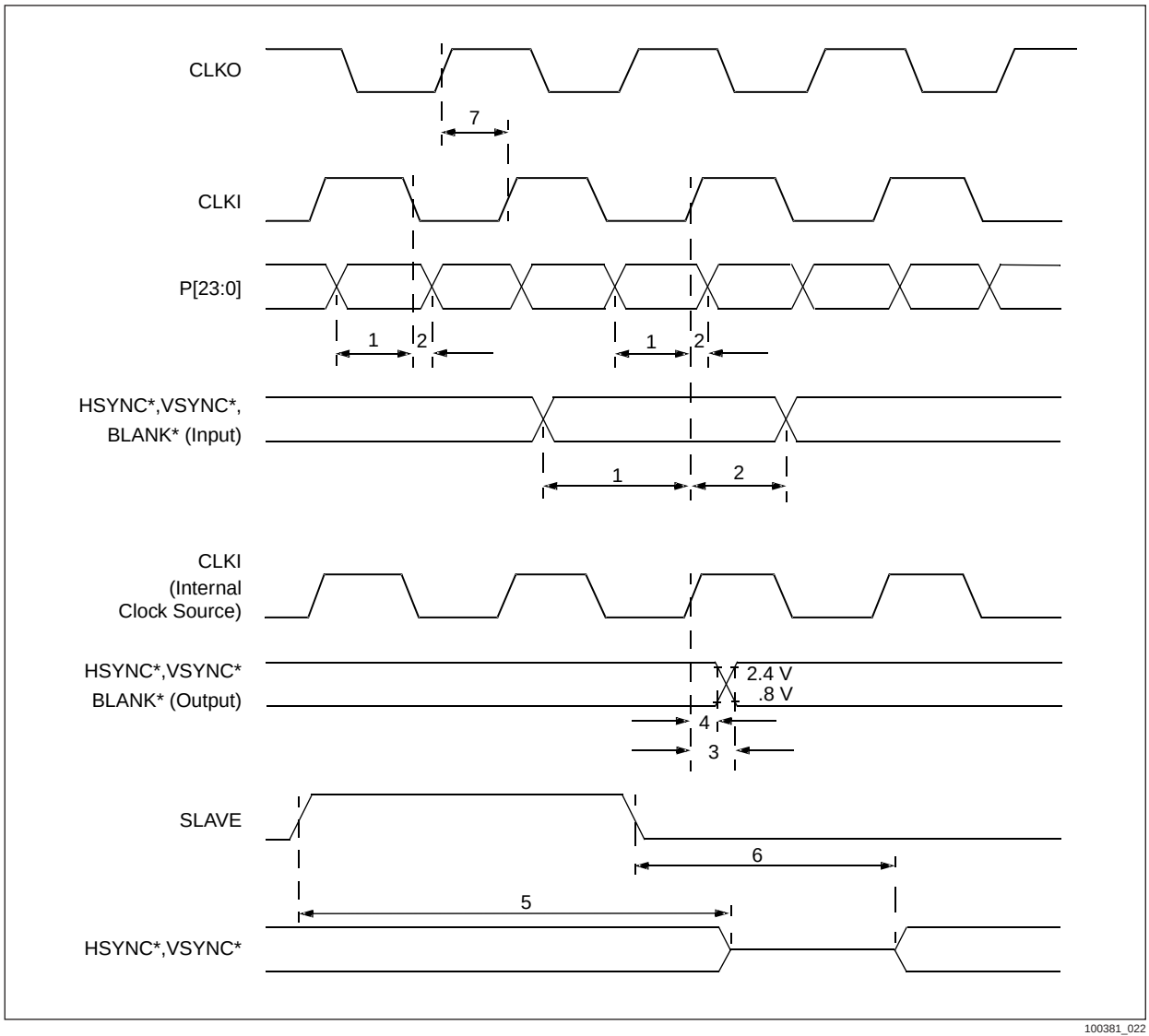

Figure 4-2. Master Interface Timing Relationship/Noninterlaced RGB/YCrCb Input

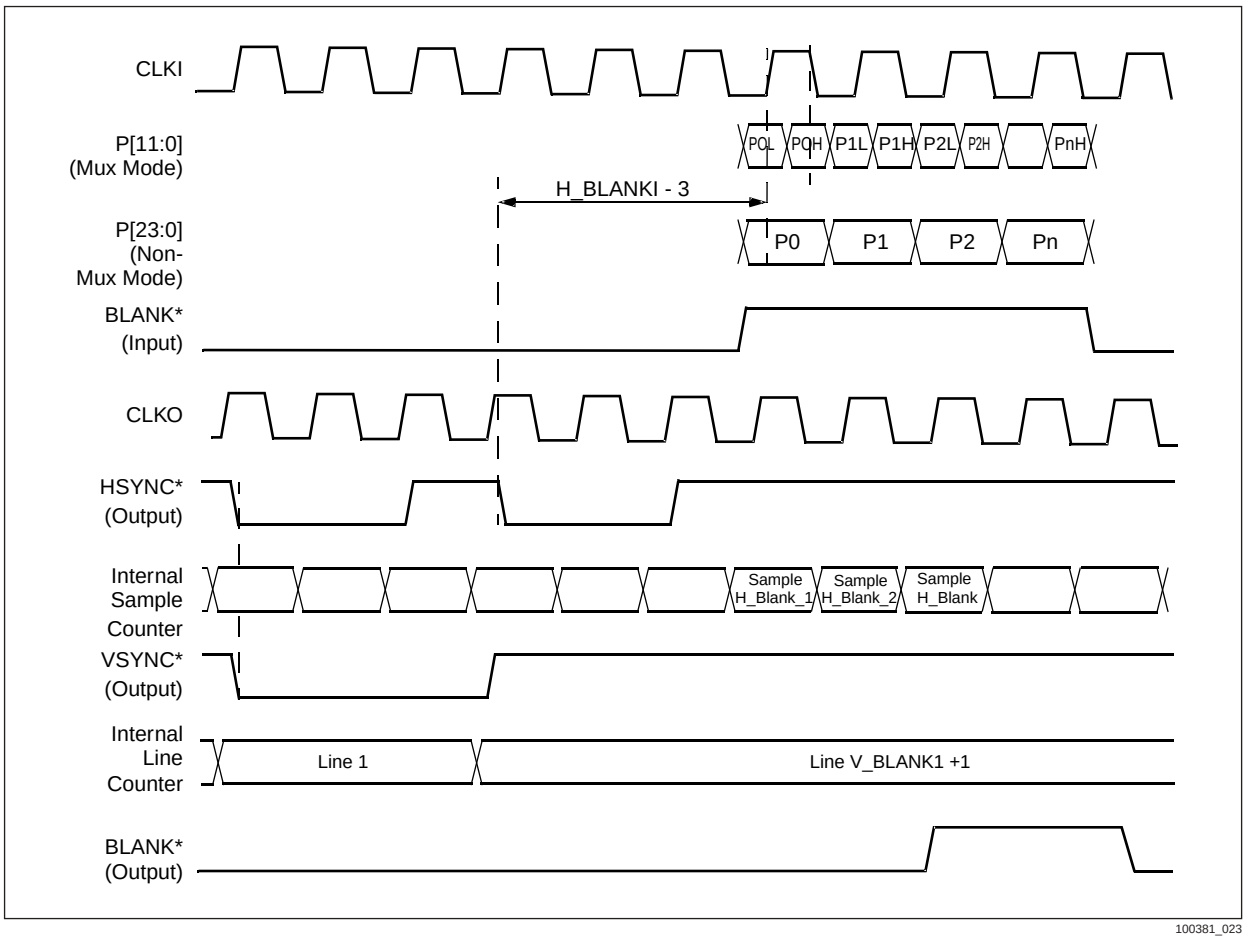

Figure 4-3. Pseudo-Master Interface Timing Relationship – Active Line/Noninterlaced RGB Input

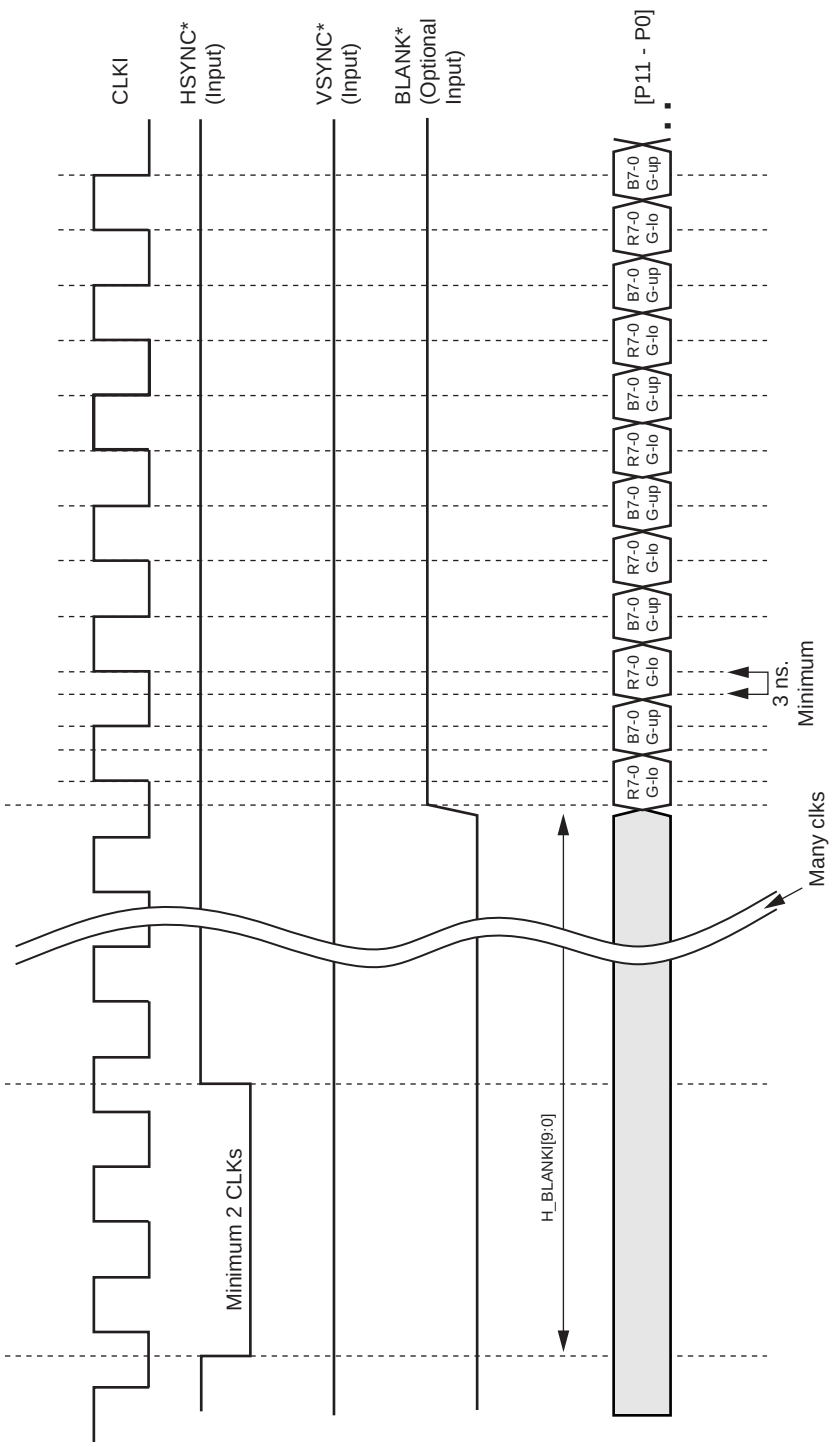

NOTE(S):

1. The leading edge pixel data (R pixel + G4, G3, G2, and G0 in the 24-bit RGB multiplexed case) and trailing edge pixel data (B pixel + G7, G6, G5, and G1) is clocked in on the rising and falling edge of CLKI, respectively.
2. The CX25870's HSYNCI and VSYNCI bits (register 0 x C6) must be set to 0 (=DEFAULT) in these timing diagrams. This configures the CX25870 to check for active low signals on the HSYNC* and VSYNC* pins from the graphics controller.
3. The {R[7:0], G4, G3, G2, and G0} - {B[7:0], G7, G6, G5, and G1} sequence begins with rising edge of BLANK* or the H_BLANKI[9:0] pixel count.
4. The clock frequency (i.e., CLKI) transmitted by the graphics controller must not deviate 25 pPM from the CLKO frequency sent by the CX25870/871. The CX25870 is the timing slave device to the Graphics Controller in pseudo-master interface.
5. 24-bit RGB multiplexed input format is illustrated in this diagram. It is assumed CX25870's IN_MODE[3:0] bits = 0000.

100381_058

Figure 4-4. Pseudo-Master Timing Relationship Blank Line/Noninterlaced RGB/YCrCb Input

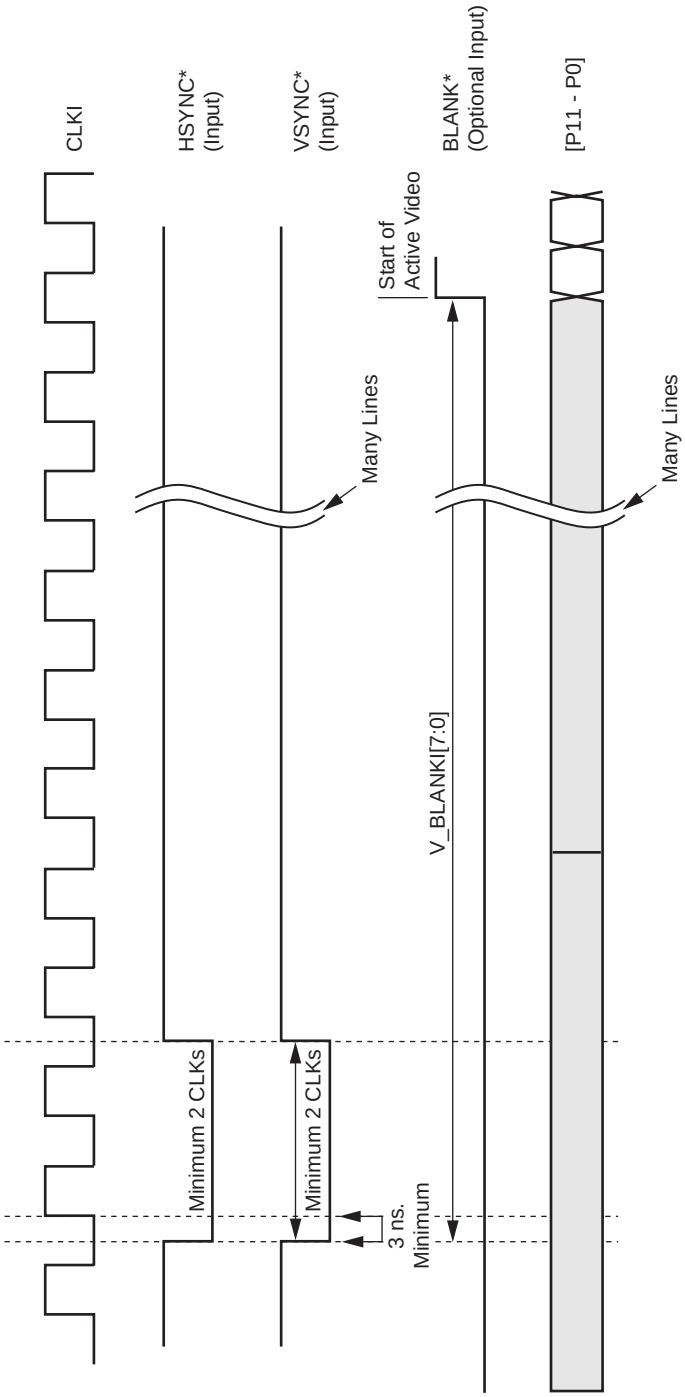

NOTE(S):

1. For noninterlaced data transmission, to start each frame, the leading edge of HSYNC* and the leading edge of VSYNC* must be coincident (within 1 CLKI clock cycle). The location of these signals' respective trailing edges is not important relative to each other.
2. The duration of the HSYNC* pulse **MUST** be at least 2 complete CLKI cycles. The duration of the VSYNC* pulse **MUST** be a minimum of 2 CLKI cycles as well. It is acceptable for the HSYNC* to remain low for longer than 2 CLKI cycles but the signal's rising edge must be received by the CX25870 at least 1 pixel before the next HSYNC* falling edge which denotes the start of the next line. Likewise, VSYNC* can stay low for much longer than 2 CLKI cycles but the signal's rising edge must be received by the CX870 at least 1 complete line before the next VSYNC* falling edge which denotes the start of the next frame.
3. If a BLANK* signal is not used as part of the physical interface to a graphics controller, then the CX25870's H_BLANK[9:0] and V_BLANKI[7:0] registers must be programmed with values equivalent to the correct amount of horizontal pixel blanking and vertical line blanking from the master.

100381_059

Figure 4-5. Slave Interface Timing Relationship/Noninterlaced RGB/YCrCb Input

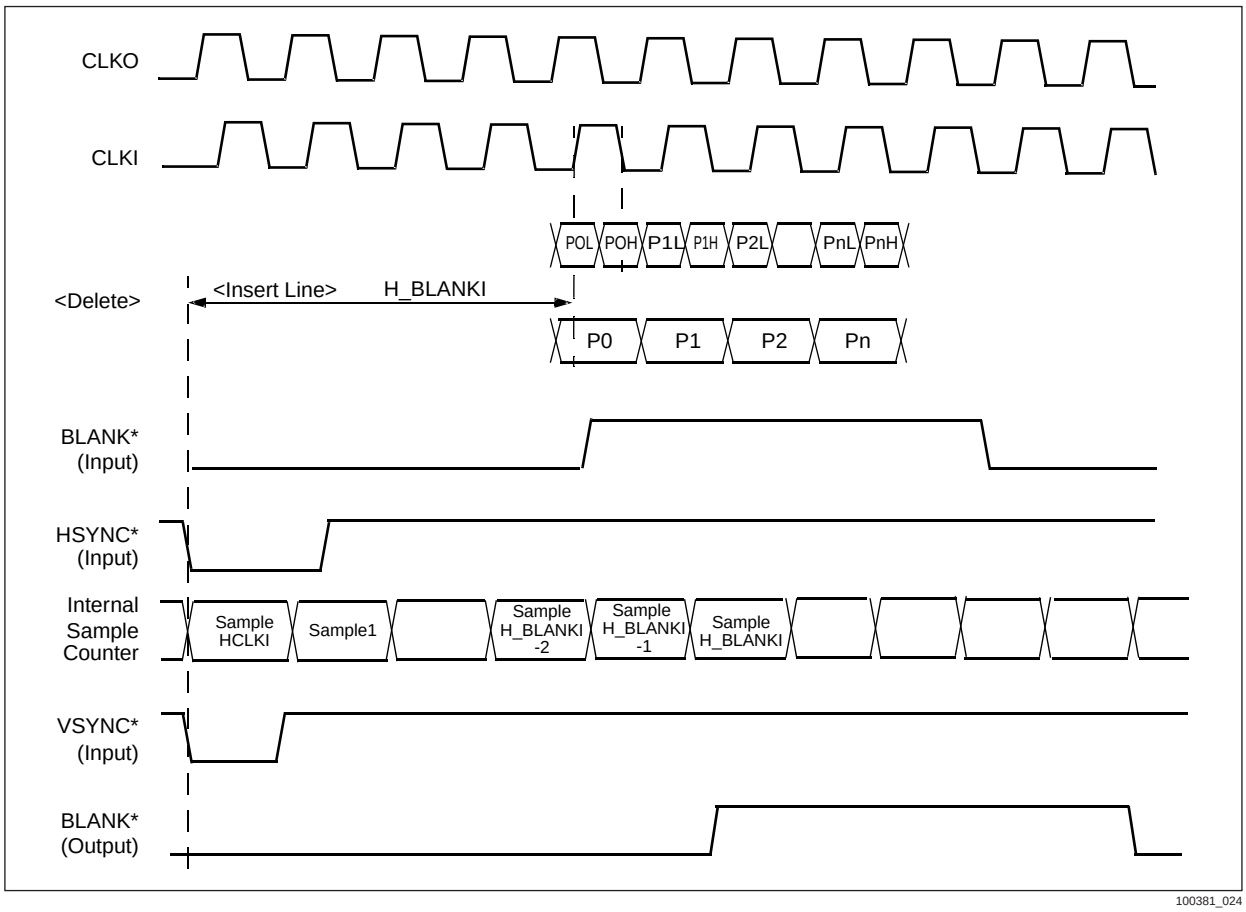

Figure 4-6. Slave Interface Timing Relationship/Interlaced Nonmultiplexed RGB Input (FLD_MODE = 10 – Default)

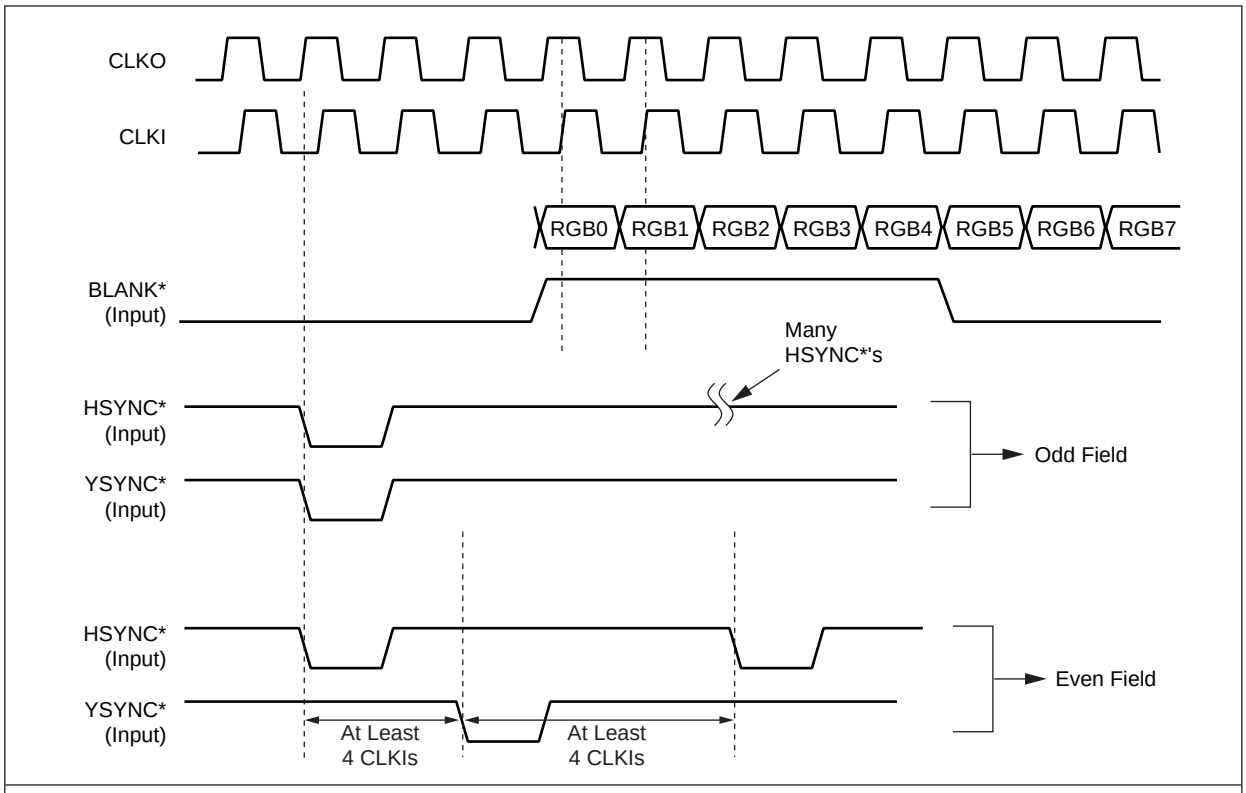

NOTE(S):

1. The CX25870's DIV2 bit must be set.
2. FLD_MODE[1:0] defined in Table 2-5.

100381_074

Figure 4-7. Slave Interface Timing Relationship/Interlaced Nonmultiplexed YCrCb Input (FLD_MODE = 01)

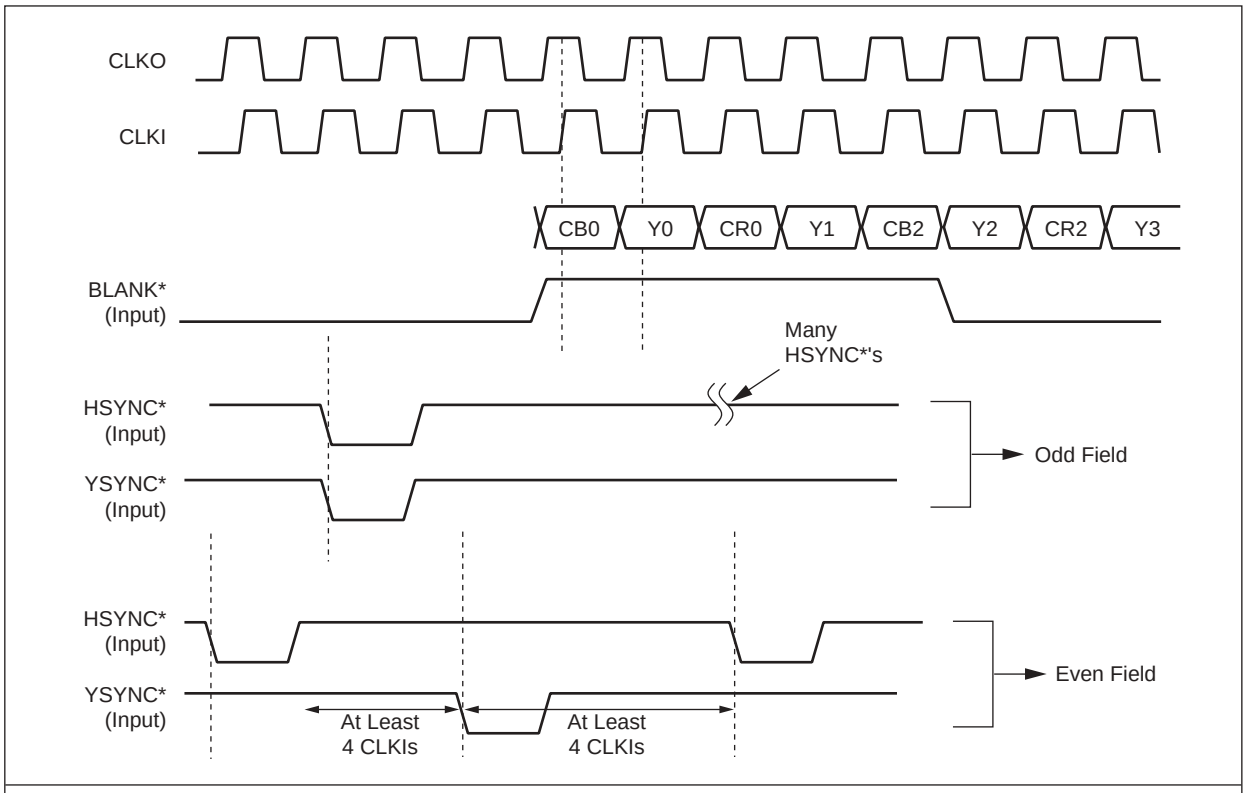

NOTE(S):
1. The CX25870's DIV2 bit must be set.
2. FLD_MODE[1:0] defined in Table 2-5.

100381_075

Figure 4-8. Slave Interface Timing Relationship/Interlaced Nonmultiplexed YCrCb Input (FLD_MODE = 00)

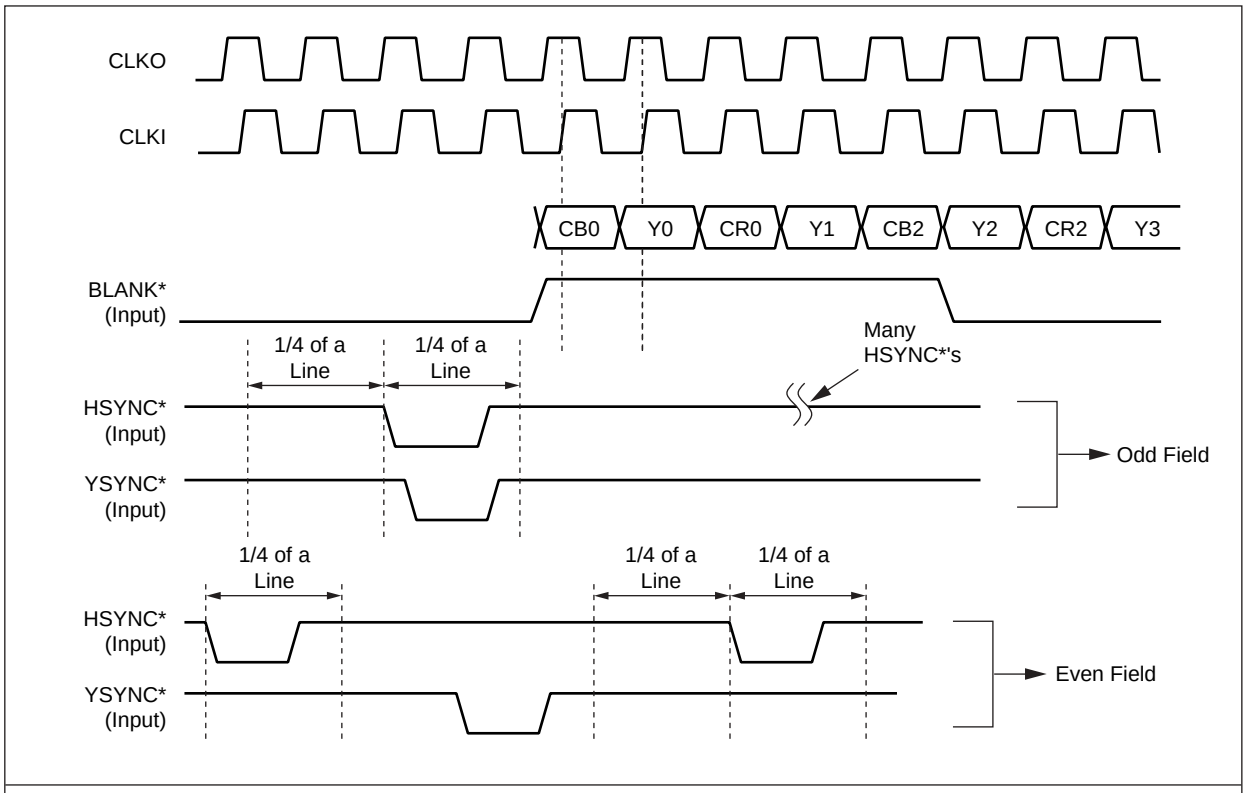

NOTE(S):

1. The CX25870's DIV2 bit must be set.
2. FLD_MODE[1:0] defined in Table 2-5.

100381_076

Figure 4-9. HDTV Output Horizontal Timing Details: 1080i

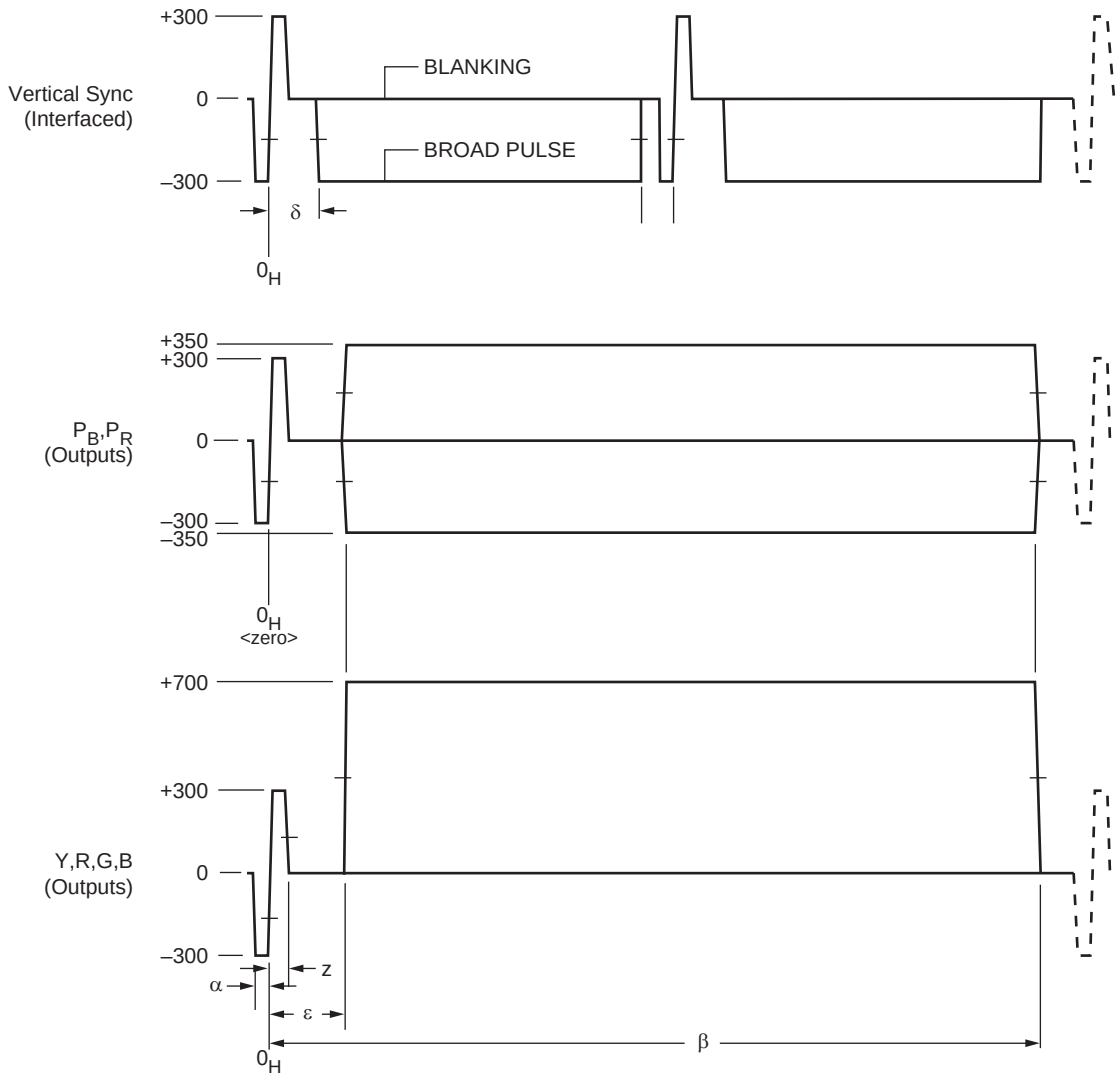

NOTE(S):

1. Values for α, β, χ, δ, ε, and σ are given in Table 4-4.
2. Sync rise time (σ) is not shown here.
3. Amplitudes are expressed in mV.

100381_089

Figure 4-10. HDTV Output Horizontal Timing Details: 720p

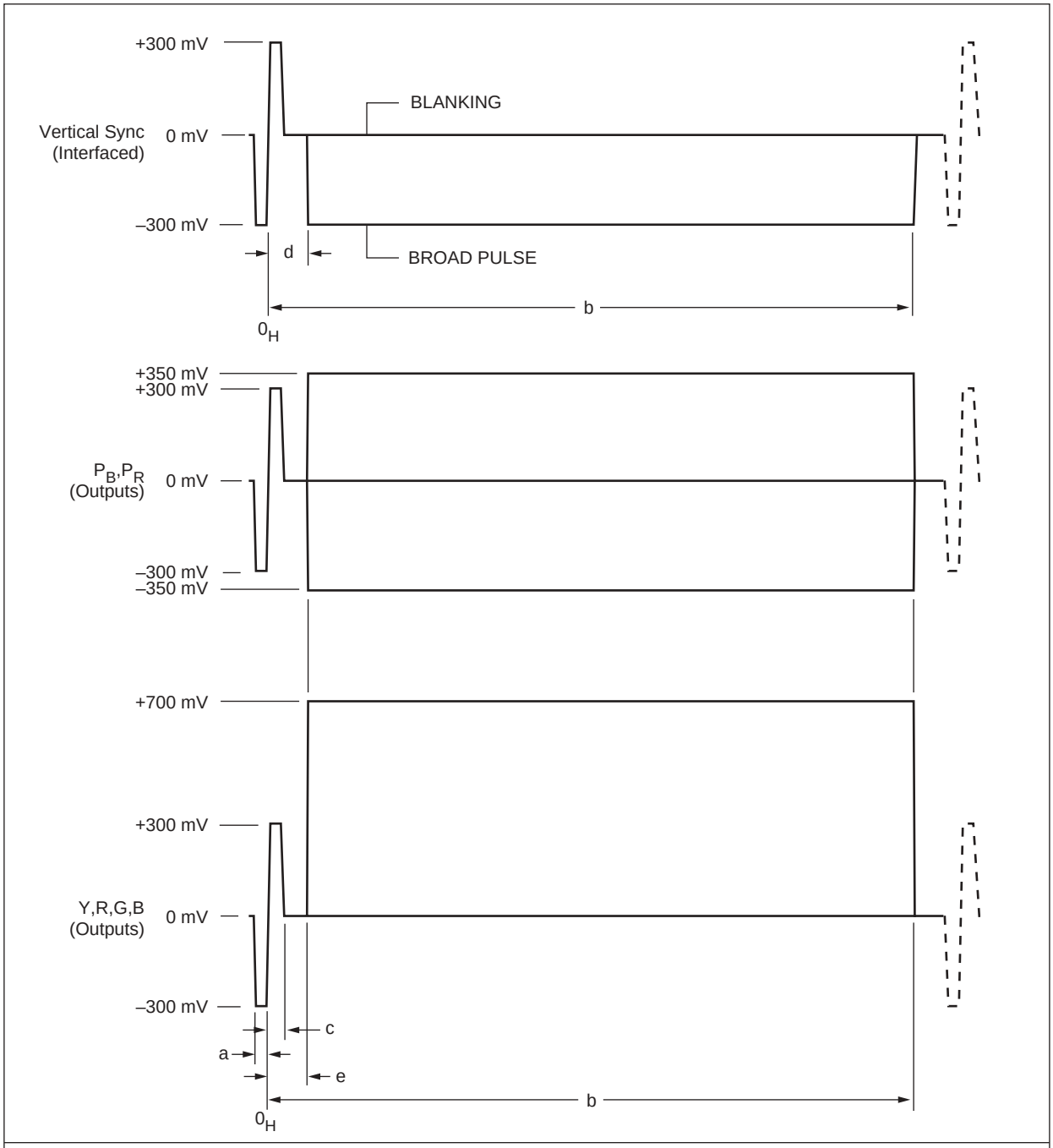

NOTE(S):

1. Values for a, b, c, d, and e are given in Table 4-4.
2. Sync rise time is not shown here.
3. Amplitudes are expressed in mV.

100381_090

4.3 Mechanical Drawing for 80-Pin PQFP

A detailed mechanical diagram for the CX25870 and the CX25871 intergrated circuit is illustrated in Figure 4-11.

Figure 4-11. 80-Pin PQFP Package Diagram

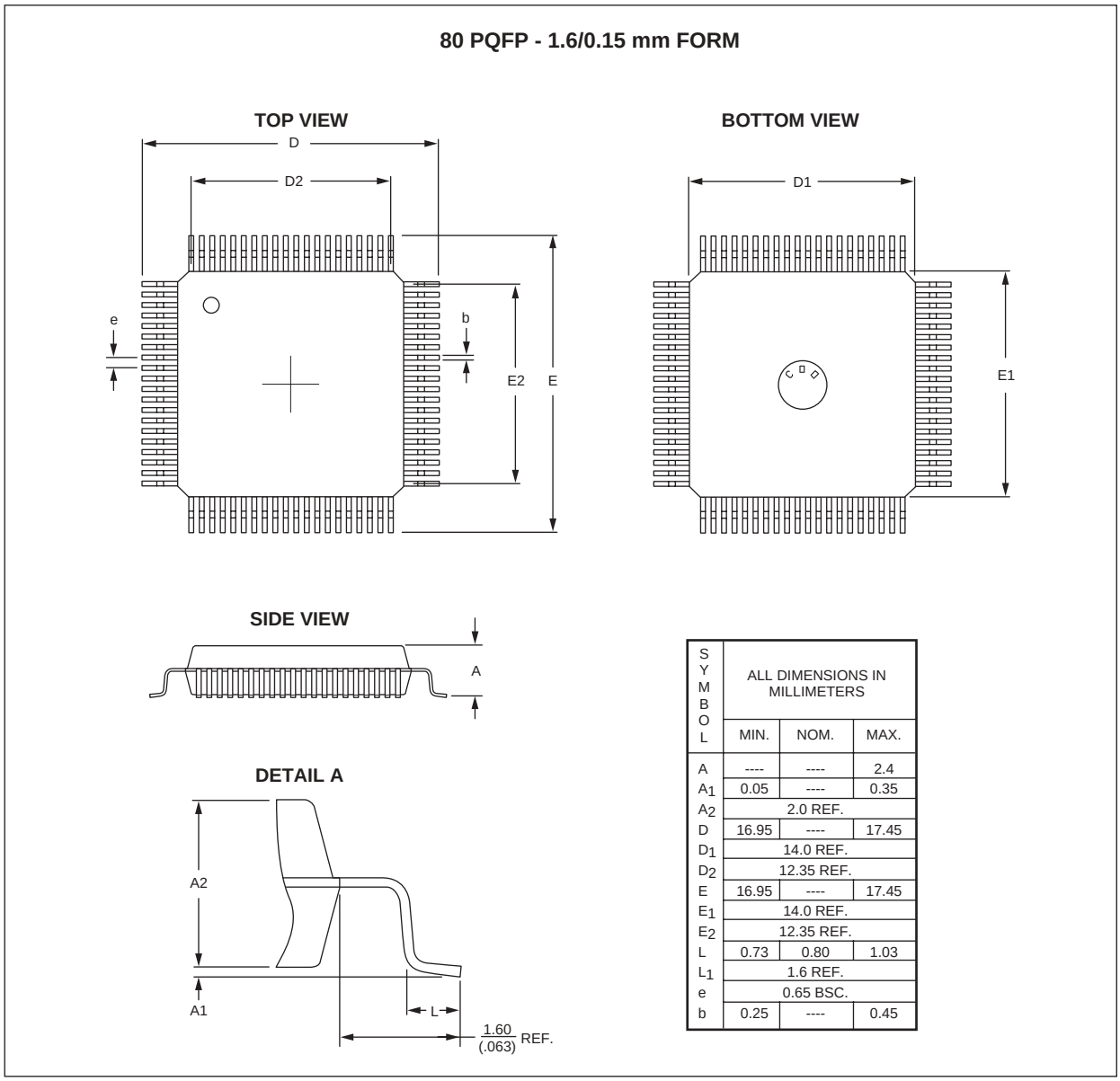

SYMBOL	ALL DIMENSIONS IN MILLIMETERS		
	MIN.	NOM.	MAX.
A	----	----	2.4
A_1	0.05	----	0.35
A_2	2.0 REF.		
D	16.95	----	17.45
D_1	14.0 REF.		
D_2	12.35 REF.		
E	16.95	----	17.45
E_1	14.0 REF.		
E_2	12.35 REF.		
L	0.73	0.80	1.03
L_1	1.6 REF.		
e	0.65 BSC.		
b	0.25	----	0.45

Appendix A Scaling and I/O Timing Register Calculations

The calculated values are used to program the registers controlling the total active pixels and lines in the input frame and the output field, as well as the vertical scaling register and the clock PLL registers. These calculations assume pixel resolution for synchronizing the graphics controller, master interface operation unless otherwise stated, and require the following input values:

MFP—Minimum Front Porch Blanking in the Input in Clocks = max (12, Controller_Minimum_Front_Porch_Blanking_Clocks);
MBP—Minimum Back Porch Blanking in the Input in Clocks = max (4, Controller_Minimum_Back_Porch_Blanking_Clocks);

VOC—desired Vertical Overscan Compensation (e.g., 0.15)
HOC—desired Horizontal Overscan Compensation (e.g., 0.15)
V_ACTIVEI—Active Lines per Input Frame (e.g., 480 or 600 or 768)
H_ACTIVE—Active Pixels per Input Line (e.g., 640 or 800 or 1024)
ALO—Target Active Lines per Output Field (See Table A-3)
TLO—Total Lines per Output Field (See Table A-3)
ATO—Active Time per Output Line (See Table A-3)
TTO—Total Time per Output Line (See Table A-3)

Tables A-1 and A-2 contain details of the supported video output formats. Table A-3 details the constant software values depending on the video output. Figures A-1 through A-8 illustrate allowable overscan compensation pairs for the most common desktop active resolutions. Tables A-3 through A-27 list the most common overscan values for the 640 x 480, 800 x 600, and 1024 x 768 active resolutions that enable dual display on both the VGA monitor and TV.

Table A-1. Target Video Parameters for Standard Definition TV Output Formats (1 of 2)

Parameter Description	NTSC-M	NTSC-J	PAL-M	PAL-60	PAL-B,D,G,H,I	PAL-N	PAL-Nc	SECAM
HSYNC Width (μs)	4.7	4.7	4.7	4.7	4.7	4.7	4.7	4.7
HSYNC and VSYNC Height (V)	0.286	0.286	0.287	0.3	0.3	0.2857	0.3	0.3
HSYNC Rise/Fall Time (10% to 90%) (ns)	150	150	150	150	200(1)	200	200	200
Burst or Subcarrier Start (μs)	5.3	5.3	5.8	5.3	5.6	5.6	5.6	5.6
Burst Width (μs)	2.514 (9 cycles)	2.514 (9 cycles)	2.52 (9cycles)	2.25 (10 cycles)	2.25 (10 cycles)	2.25 (10 cycles)	2.51 (9 cycles)	N/A
Subcarrier Frequency(5) (Hz)	3579545	3579545	3579611.49	4433618.75	4433618.75	4433618.75	3582056.25	for=4406250 fob=4250000
Burst or Subcarrier Height (V)	0.2857	0.2857	0.306	0.3	0.3	0.3	0.3	0.161
Phase Alternation	NO	NO	YES	YES	YES	YES	YES	NO
Number of Lines per Frame	525	525	525	525	625	625	625	625
Line Frequency (Hz)	15734.264	15734.264	15734.264	15734.264	15625	15625	15625	15625
Field Frequency (Hz)	59.94	59.94	59.94	59.94	50	50	50	50
Setup	YES	NO	YES	NO	NO	YES	NO	NO
First Active Line	22(3)	22(3)	22(3)	22(3)	23(4)	23(4)	23(4)	23(4)
Last Active Line	262(3)	262(3)	262(3)	262(3)	309(4)	309(4)	309(4)	309(4)
HSYNC to Blank End (μs)	9.2[9.037]	9.2	9.2	9.2	10.5[9.778]	9.2	10.5	10.5
Blank Begin to HSYNC (μs)	1.5[1.185]	1.5	1.5	1.5	1.5[0.889]	1.5	1.5	1.5
Black to 100% White (V)	0.661	0.714	0.661	0.7	0.7	0.661	0.7	0.7

Table A-1. Target Video Parameters for Standard Definition TV Output Formats (2 of 2)

Parameter Description	NTSC-M	NTSC-J	PAL-M	PAL-60	PAL-B,D,G,H,I	PAL-N	PAL-Nc	SECAM
Number of Lines each for Vertical Serration, Equalization	3	3	3	3	2.5	3	2.5	2.5

NOTE(S):
(1) Value for PAL-I is 250 ns.
2. ITU-R BT.601 blanking values given in square brackets [].
(3) Using NTSC line numbering convention from ITU-R BT.470.
(4) Using PAL line numbering convention from ITU-R BT.470.
(5) When programming the subcarrier increment, use relationship of F_{sc} to F_h as given in ITU-R BT.470 instead of F_{sc} to F_{clk}.

Table A-2. Key Parameters for Supported Standard Definition Video Output Formats

Mode	NTSC	NTSC-60Hz	PAL-BDGHI	PAL-N	PAL-Nc	PAL-M	PAL-60
FSC (Hz)	3,579,545	3,579,545	4,433,618.75	4,433,618.75	3,582,056.25	3,575,611.88	4,433,619.49
Burst Start	5.3 µs	5.3 µs	5.60 µs	5.60 µs	5.60 µs	5.80 µs	5.60 µs
Burst End	7.82 µs	7.82 µs	7.85 µs	7.85 µs	8.11 µs	8.32 µs	7.85 µs
HSYNC Width(1)	4.70 µs	4.70 µs	4.70 µs	4.70 µs	4.70 µs	4.70 µs	4.70 µs
HSYNC Frequency(1)	63.555 µs	64 µs	64 µs	64 µs	64 µs	63.555 µs	64 µs
Active Begin	9.40 µs	9.40 µs	10.5 µs	9.40 µs	10.5 µs	9.40 µs	10.5 µs
Image Center	35.667 µs	35.667 µs	36.407 µs	35.667 µs	36.407 µs	35.667 µs	36.407 µs
Blank Begin to HSYNC(1)	1.50 µs	1.50 µs	1.50 µs	1.50 µs	1.50 µs	1.50 µs	1.50 µs

NOTE(S):
(1) HSYNC in this table refers to the analog horizontal synchronization pulse that starts every scan line.

Table A-3. Constant Values Dependent on Encoding Mode

Modes	Interlaced		NonInterlaced	
	PAL	NTSC	PAL	NTSC
ALO	288	243	288	243
TLO	312.5	262.5	312	262
ATO	52.0 µs	52.65556 µs	52.0 µs	52.65556 µs
TTO	64.0 µs	63.55556 µs	64.0 µs	63.55556 µs

Figure A-1. Allowable Overscan Compensation Ratios for Dual Display, 640x480 Input, NTSC Output with 20 Clock HBlank Period

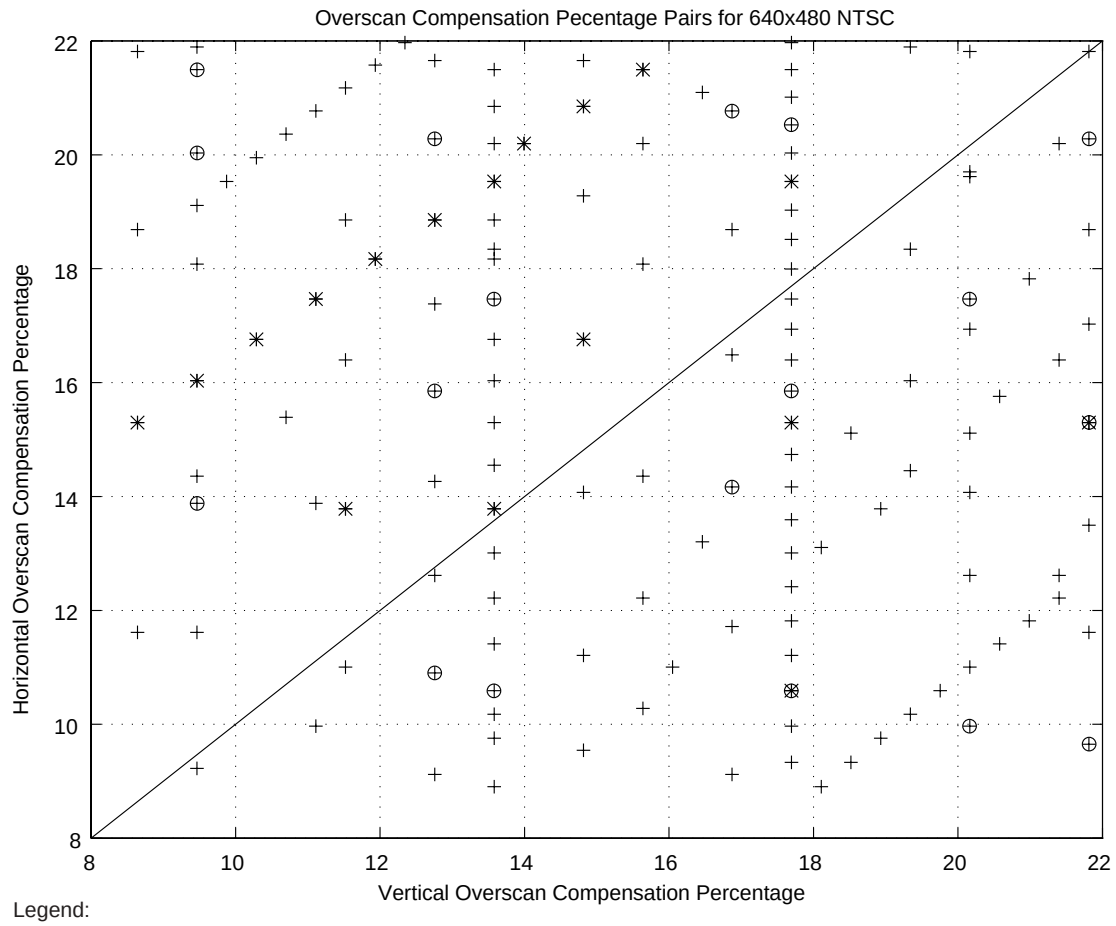

NOTE(S):
Use this chart for PAL-M and PAL-60 allowable overscan ratios.

100381_026

Figure A-2. Allowable Overscan Compensation Ratios for Dual Display, 640x480 Input, PAL-BDGHI Output with 20 Clock HBlank Period

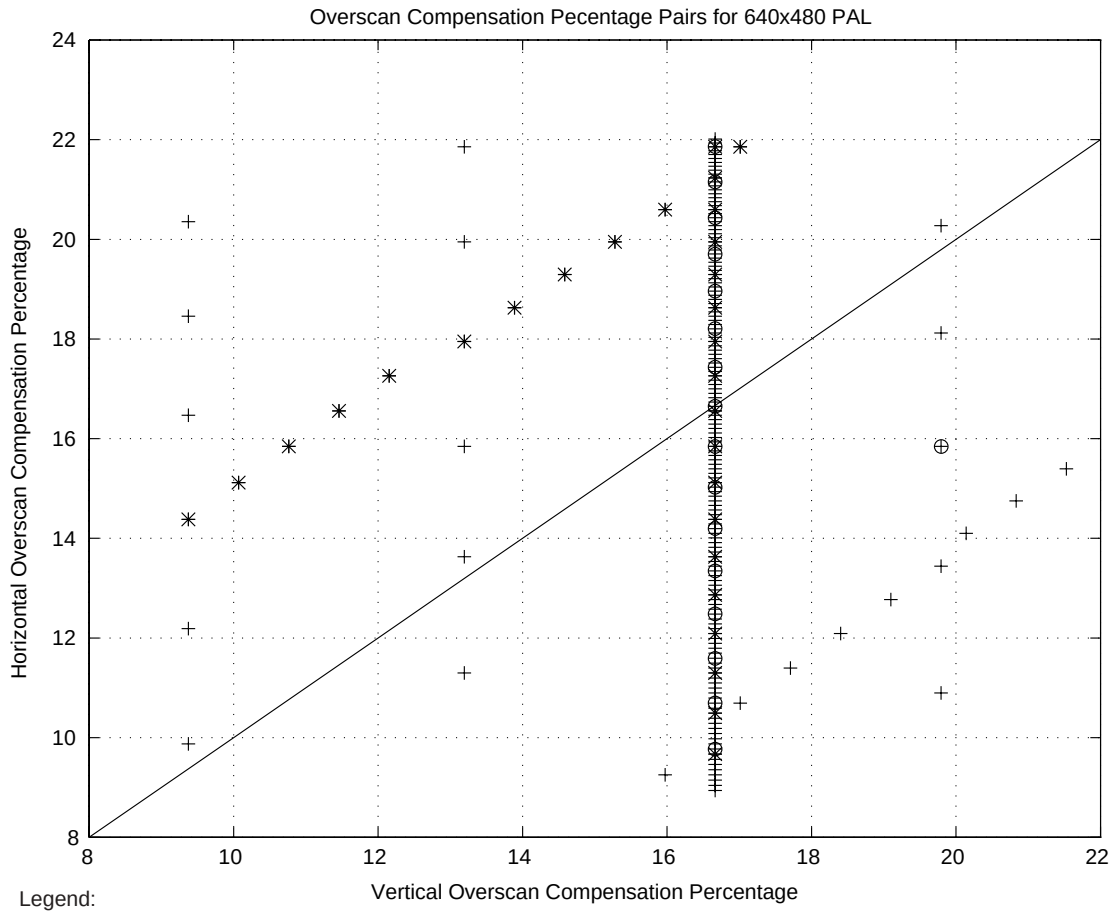

NOTE(S):
Use this chart for SECAM, PAL-N, and PAL-Nc allowable overscan compensation ratios.

100381_027

Figure A-3. Allowable Overscan Compensation Ratios for Dual Display, 800x600 Input, NTSC Output

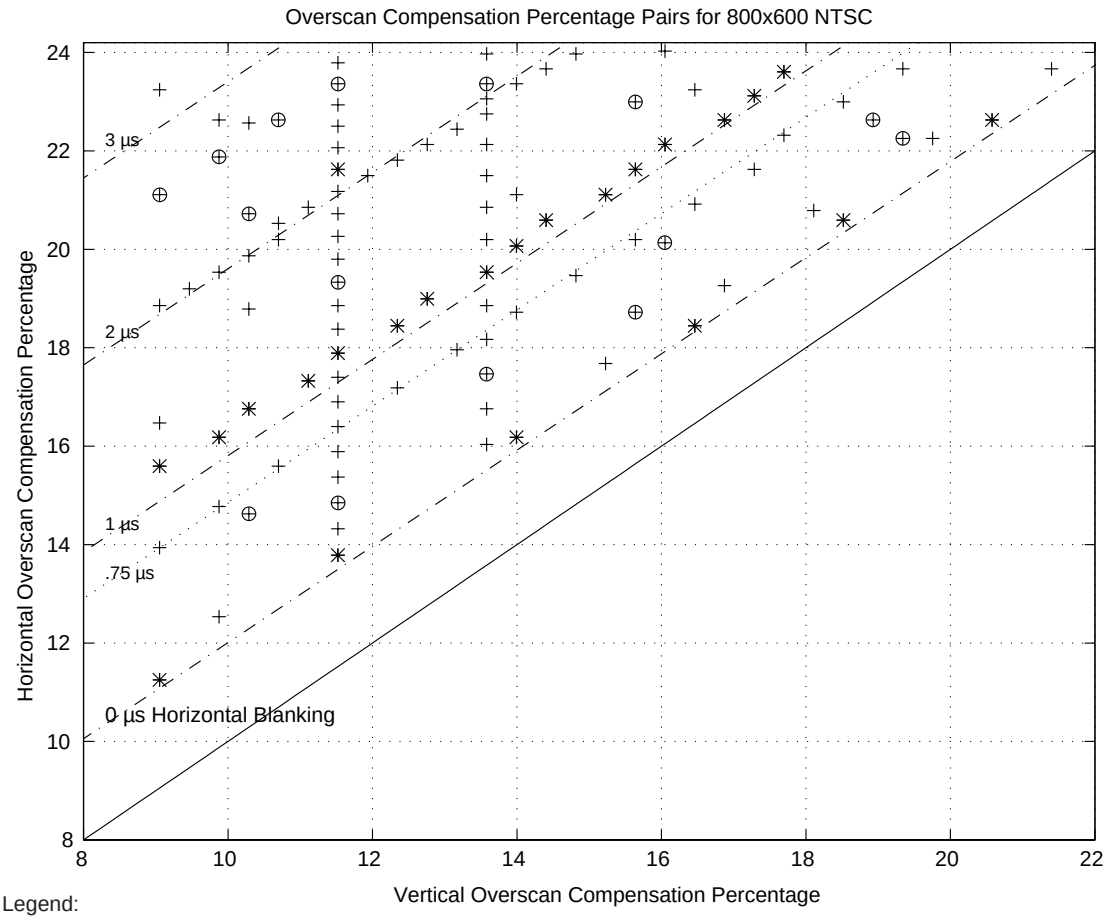

Legend:

+ = Pixel Clock Solution

✳ = 8-Cycle Character Clock Solution

○ = 9-Cycle Character Clock Solution

NOTE(S):

Use this chart for PAL-M and PAL-60 allowable overscan ratios.

100381_028

Figure A-4. Allowable Overscan Compensation Ratios for Dual Display, 800x600 Input, PAL–BDGHI Output, Standard Clocking Mode

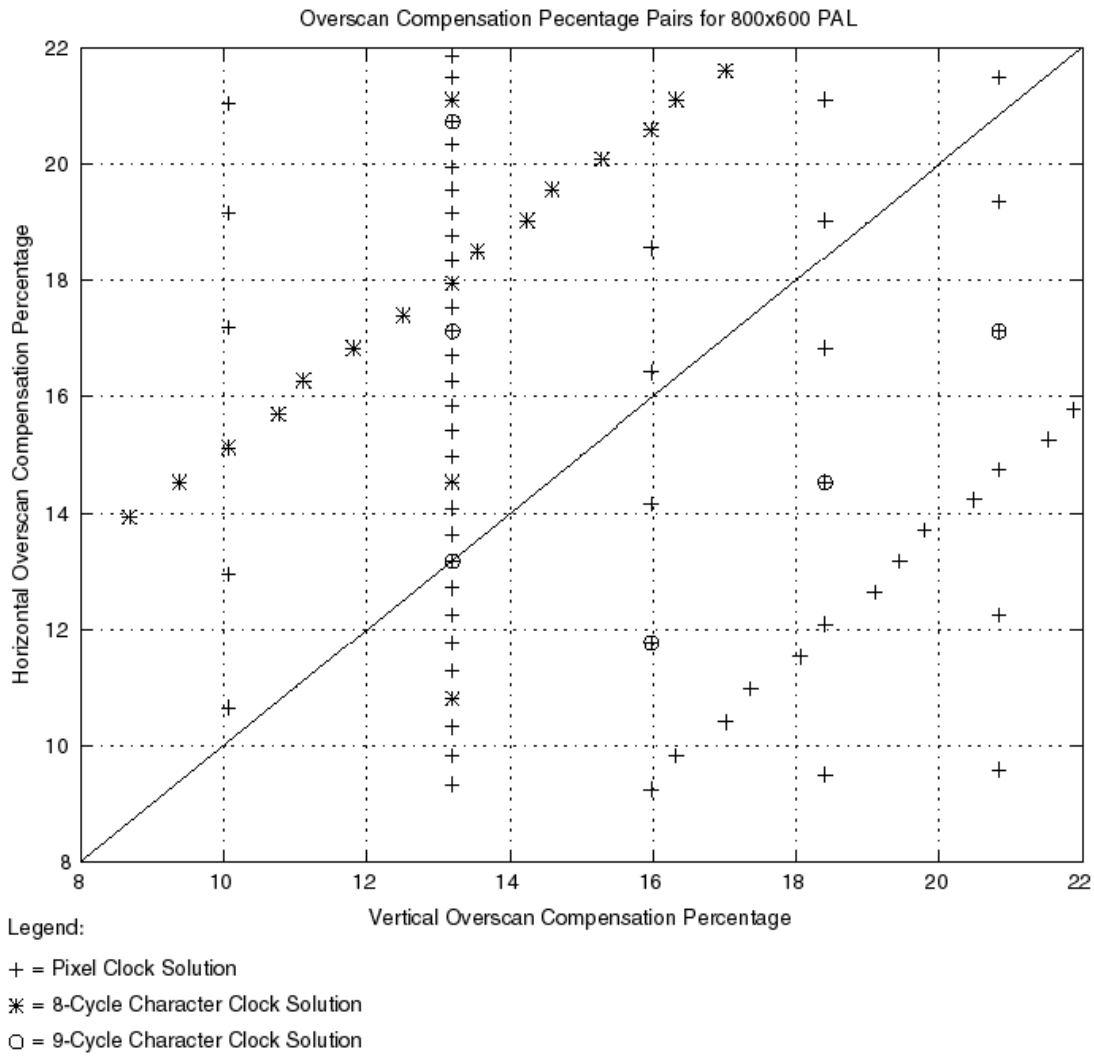

NOTE(S):
Use this chart for SECAM, PAL-N, and PAL-Nc allowable overscan

100381_029

Figure A-5. Allowable Overscan Compensation Ratios for Dual Display, 800x600 Input, NTSC Output in 3:2 Clocking Mode

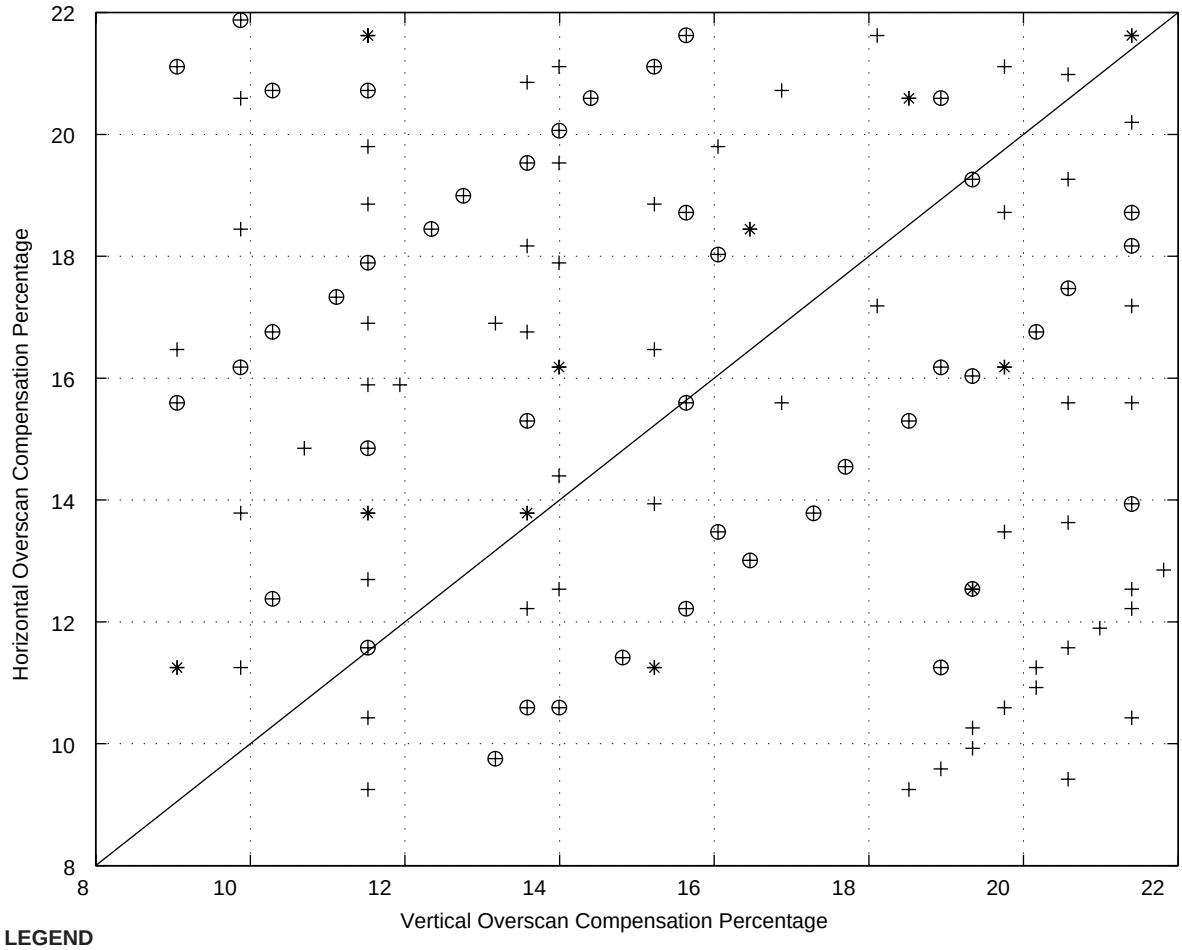

LEGEND

+ = Pixel Clock Solution

✳ = 8-Cycle Character Clock Solution

○ = 9-Cycle Character Clock Solution

NOTE(S):

1. All overscan solutions on this chart can be enabled by a data master that requires no more than 4 µs of MBlank time per line.
2. Use this chart for PAL-M and PAL-60 allowable overscan ratios.

Figure A-6. Allowable Overscan Compensation Ratios for Dual Display, 800x600 Input, PAL-BDGHI Output in 3:2 Clocking Mode

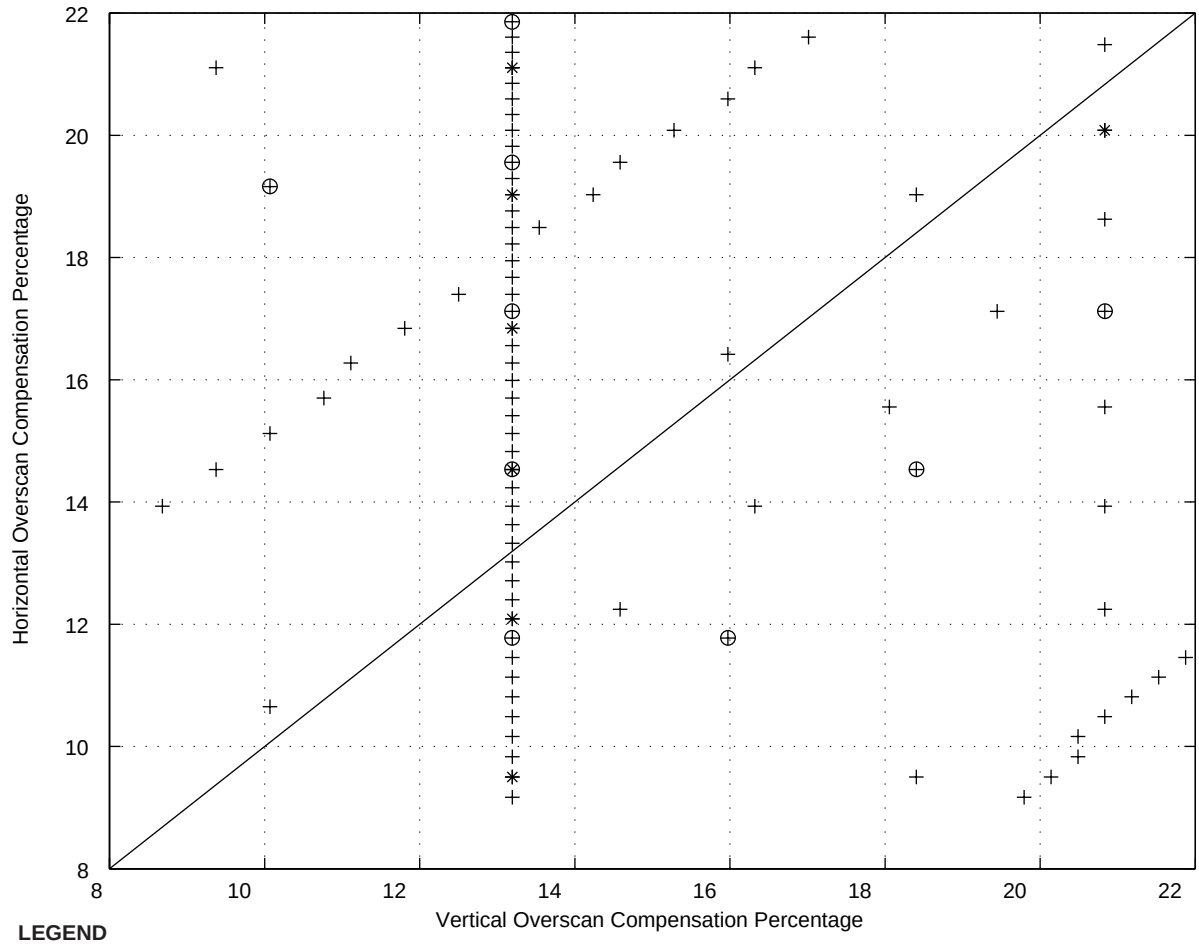

NOTE(S):

1. All overscan solutions on this chart can be enabled by a data master that requires no more than 8 µs of HBlank time per line.
2. Use this chart for SECAM, PAL-N, and PAL-Nc allowable overscan compensation ratios.

100381_066

Figure A-7. Allowable Overscan Compensation Ratios for Dual Display, 1024x768 Input, NTSC Output

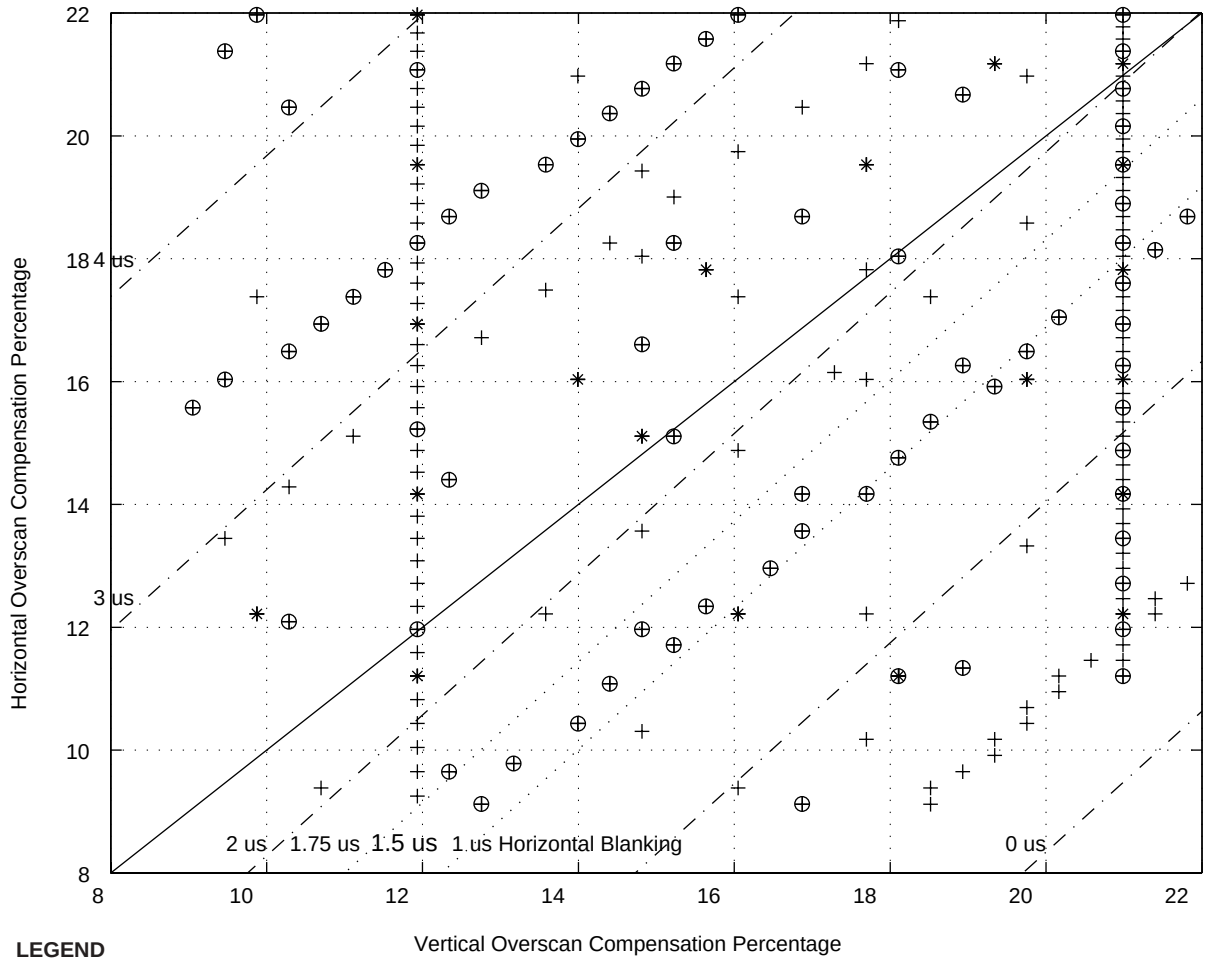

LEGEND

+ = Pixel Clock Solution

✳ = 8-Cycle Character Clock Solution

○ = 9-Cycle Character Clock Solution

NOTE(S):

Use this chart for PAL-M and PAL-60 allowable overscan ratios.

100381_063

Figure A-8. Allowable Overscan Compensation Ratios for Dual Display, 1024x768 Input, PAL-BDGHI Output

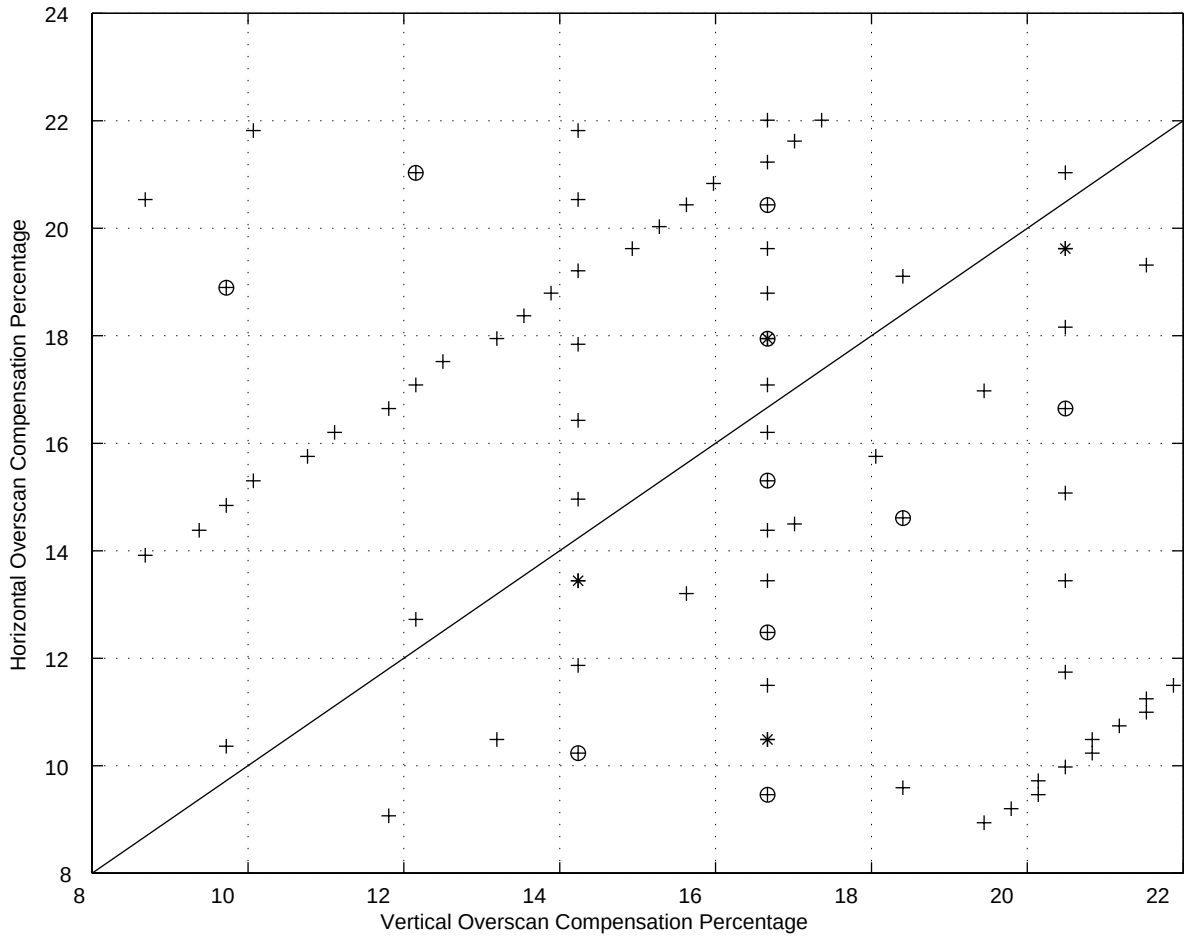

NOTE(S):

1. All overscan solutions on this chart can be enabled by a data master that requires no more than 3 µs of HBlank time per line.
2. Use this chart for SECAM, PAL-N, and PAL-Nc allowable overscan compensation ratios.

100381_065

Table A-4. Overscan Values, 640 x 480 NTSC, Pixel-Based Controller, 1-Pixel Resolution, 2.5 µs HBlank (1 of 2)

Controller Pixels		Encoder Pixels		Overscan (Percent)		
Total		Active	Total			
H_CLKI	V_LINESI	V_ACTIVEO	H_CLKO	Horizontal	Vertical	Resolution
780	665	190	988	21.81	21.81	0.00
780	595	212	884	12.61	12.76	–0.14
784	600	210	896	13.79	13.58	0.21
780	630	200	936	17.47	17.70	–0.23
777	575	220	851	9.23	9.47	–0.24
785	630	200	942	18.00	17.70	0.30
777	625	202	925	16.49	16.87	–0.38
777	650	194	962	19.70	20.16	–0.46
775	588	215	868	11.00	11.52	–0.52
775	651	194	961	19.62	20.16	–0.55
777	600	210	888	13.01	13.58	–0.57
775	609	207	899	14.07	14.81	–0.74
775	630	200	930	16.94	17.70	–0.76
790	630	200	948	18.51	17.70	0.82
791	600	210	904	14.55	13.58	0.97
770	645	196	946	18.34	19.34	–1.00
770	585	216	858	9.97	11.11	–1.14
770	660	191	968	20.20	21.40	–1.20
770	615	205	902	14.36	15.64	–1.28
770	630	200	924	16.40	17.70	–1.30
795	630	200	954	19.03	17.70	1.33
770	600	210	880	12.22	13.58	–1.36
795	595	212	901	14.26	12.76	1.51
765	665	190	969	20.28	21.81	–1.53
798	650	194	988	21.81	20.16	1.65
798	600	210	912	15.30	13.58	1.72
798	625	202	950	18.69	16.87	1.81
800	630	200	960	19.53	17.70	1.84
765	630	200	918	15.85	17.70	–1.84
765	595	212	867	10.90	12.76	–1.86
800	609	207	928	16.76	14.81	1.94

Table A-4. Overscan Values, 640 x 480 NTSC, Pixel-Based Controller, 1-Pixel Resolution, 2.5 µs HBlank (2 of 2)

Controller Pixels		Encoder Pixels		Overscan (Percent)		
Total		Active	Total			
H_CLKI	V_LINESI	V_ACTIVEO	H_CLKO	Horizontal	Vertical	Resolution
798	575	220	874	11.62	9.47	2.15
763	600	210	872	11.41	13.58	–2.17
800	588	215	896	13.79	11.52	2.26
805	630	200	966	20.03	17.70	2.34
760	630	200	912	15.30	17.70	–2.40
805	615	205	943	18.08	15.64	2.44
805	600	210	920	16.03	13.58	2.45
805	645	196	989	21.89	19.34	2.55
756	650	194	936	17.47	20.16	–2.69
756	625	202	900	14.17	16.87	–2.70
805	585	216	897	13.88	11.11	2.77
810	630	200	972	20.53	17.70	2.83
755	630	200	906	14.74	17.70	–2.96
805	570	222	874	11.62	8.64	2.97
756	600	210	864	10.59	13.58	–2.99

Table A-5. Overscan Values, 640 x 480 NTSC, Character Clock-Based Controller, 8-Pixel Resolution, 2.5 µs HBlank

Controller Pixels		Encoder Pixels		Overscan (Percent)		
Total		Active	Total			
H_CLKI	V_LINESI	V_ACTIVEO	H_CLKO	Horizontal	Vertical	Resolution
784	600	210	896	13.79	13.58	0.21
800	630	200	960	19.53	17.70	1.84
800	609	207	928	16.76	14.81	1.94
800	588	215	896	13.79	11.52	2.26
760	630	200	912	15.30	17.70	–2.40
840	615	205	984	21.50	15.64	5.86
840	600	210	960	19.53	13.58	5.95
840	610	207	976	20.85	14.81	6.04
840	595	212	952	18.86	12.76	6.10
840	605	209	968	20.20	13.99	6.21
840	590	214	944	18.17	11.93	6.23
840	585	216	936	17.47	11.11	6.36
840	580	218	928	16.76	10.29	6.47
720	665	190	912	15.30	21.81	–6.51
840	575	220	920	16.03	9.47	6.57
840	570	222	912	15.30	8.64	6.66
720	630	200	864	10.59	17.70	–7.10

Table A-6. Overscan Values, 640 x 480 NTSC, Character Clock-Based Controller, 9-Pixel Resolution, 2.5 µs HBlank

Controller Pixels		Encoder Pixels		Overscan (Percent)		
Total		Active	Total			
H_CLKI	V_LINESI	V_ACTIVEO	H_CLKO	Horizontal	Vertical	Resolution
765	665	190	969	20.28	21.81	–1.53
765	630	200	918	15.85	17.70	–1.84
765	595	212	867	10.90	12.76	–1.86
756	650	194	936	17.47	20.16	–2.69
756	625	202	900	14.17	16.87	–2.70
810	630	200	972	20.53	17.70	2.83
756	600	210	864	10.59	13.58	–2.99
810	595	212	918	15.85	12.76	3.09
819	600	210	936	17.47	13.58	3.89
819	625	202	975	20.77	16.87	3.90
819	575	220	897	13.88	9.47	4.42
720	665	190	912	15.30	21.81	–6.51
720	630	200	864	10.59	17.70	–7.10
855	595	212	969	20.28	12.76	7.52
693	650	194	858	9.97	20.16	–10.20
882	575	220	966	20.03	9.47	10.57
900	574	220	984	21.50	9.47	12.03
675	665	190	855	9.65	21.81	–12.16

Table A-7. Overscan Values, 640 x 480 PAL-BDGHI, Pixel-Based Controller, 1-Pixel Resolution, 2.5 µs HBlank (1 of 3)

Controller Pixels		Encoder Pixels		Overscan (Percent)		
Total		Active	Total			
H_CLKI	V_LINESI	V_ACTIVEO	H_CLKO	Horizontal	Vertical	Resolution
945	625	240	945	16.65	16.67	–0.02
946	625	240	946	16.73	16.67	0.07
944	625	240	944	16.56	16.67	–0.11
947	625	240	947	16.82	16.67	0.16
943	625	240	943	16.47	16.67	–0.20
948	625	240	948	16.91	16.67	0.24
942	625	240	942	16.38	16.67	–0.29
949	625	240	949	17.00	16.67	0.33
941	625	240	941	16.29	16.67	–0.37
950	625	240	950	17.09	16.67	0.42
950	600	250	912	13.63	13.19	0.44
940	625	240	940	16.20	16.67	–0.46
950	650	231	988	20.27	19.79	0.48
950	575	261	874	9.88	9.38	0.50
951	625	240	951	17.17	16.67	0.51
939	625	240	939	16.11	16.67	–0.55
952	625	240	952	17.26	16.67	0.59
938	625	240	938	16.02	16.67	–0.64
953	625	240	953	17.35	16.67	0.68
937	625	240	937	15.93	16.67	–0.73
954	625	240	954	17.43	16.67	0.77
936	625	240	936	15.84	16.67	–0.82
955	625	240	955	17.52	16.67	0.85
935	625	240	935	15.75	16.67	–0.91
956	625	240	956	17.61	16.67	0.94
934	625	240	934	15.66	16.67	–1.00
957	625	240	957	17.69	16.67	1.02
933	625	240	933	15.57	16.67	–1.09
958	625	240	958	17.78	16.67	1.11
932	625	240	932	15.48	16.67	–1.18
959	625	240	959	17.86	16.67	1.20

Table A-7. Overscan Values, 640 x 480 PAL-BDGHI, Pixel-Based Controller, 1-Pixel Resolution, 2.5 µs HBlank (2 of 3)

Controller Pixels		Encoder Pixels		Overscan (Percent)		
Total		Active	Total			
H_CLKI	V_LINESI	V_ACTIVEO	H_CLKO	Horizontal	Vertical	Resolution
931	625	240	931	15.39	16.67	–1.27
960	625	240	960	17.95	16.67	1.28
930	625	240	930	15.30	16.67	–1.36
961	625	240	961	18.03	16.67	1.37
962	625	240	962	18.12	16.67	1.45
929	625	240	929	15.21	16.67	–1.46
963	625	240	963	18.20	16.67	1.54
928	625	240	928	15.12	16.67	–1.55
964	625	240	964	18.29	16.67	1.62
927	625	240	927	15.03	16.67	–1.64
925	650	231	962	18.12	19.79	–1.67
965	625	240	965	18.37	16.67	1.71
926	625	240	926	14.94	16.67	–1.73
966	625	240	966	18.46	16.67	1.79
925	625	240	925	14.84	16.67	–1.82
967	625	240	967	18.54	16.67	1.88
925	600	250	888	11.30	13.19	–1.90
924	625	240	924	14.75	16.67	–1.91
968	625	240	968	18.63	16.67	1.96
923	625	240	923	14.66	16.67	–2.01
969	625	240	969	18.71	16.67	2.04
922	625	240	922	14.57	16.67	–2.10
970	625	240	970	18.79	16.67	2.13
921	625	240	921	14.47	16.67	–2.19
971	625	240	971	18.88	16.67	2.21
920	625	240	920	14.38	16.67	–2.29
972	625	240	972	18.96	16.67	2.30
973	625	240	973	19.04	16.67	2.38
919	625	240	919	14.29	16.67	–2.38
974	625	240	974	19.13	16.67	2.46
918	625	240	918	14.19	16.67	–2.47

Table A-7. Overscan Values, 640 x 480 PAL-BDGHI, Pixel-Based Controller, 1-Pixel Resolution, 2.5 µs HBlank (3 of 3)

Controller Pixels		Encoder Pixels		Overscan (Percent)		
Total		Active	Total			
H_CLKI	V_LINESI	V_ACTIVEO	H_CLKO	Horizontal	Vertical	Resolution
975	625	240	975	19.21	16.67	2.54
917	625	240	917	14.10	16.67	–2.57
976	625	240	976	19.29	16.67	2.63
975	600	250	936	15.84	13.19	2.65
916	625	240	916	14.01	16.67	–2.66
977	625	240	977	19.38	16.67	2.71
915	625	240	915	13.91	16.67	–2.75
978	625	240	978	19.46	16.67	2.79
975	575	261	897	12.19	9.38	2.81
914	625	240	914	13.82	16.67	–2.85
979	625	240	979	19.54	16.67	2.87
913	625	240	913	13.72	16.67	–2.94
980	625	240	980	19.62	16.67	2.96

Table A-8. Overscan Values, 640 x 480 PAL-BDGHI, Character Clock-Based Controller, 8-Pixel Resolution, 2.5 µs HBlank

Controller Pixels		Encoder Pixels		Overscan (Percent)		
Total		Active	Total			
H_CLKI	V_LINESI	V_ACTIVEO	H_CLKO	Horizontal	Vertical	Resolution
944	625	240	944	16.56	16.67	–0.11
952	625	240	952	17.26	16.67	0.59
936	625	240	936	15.84	16.67	–0.82
960	625	240	960	17.95	16.67	1.28
928	625	240	928	15.12	16.67	–1.55
968	625	240	968	18.63	16.67	1.96
920	625	240	920	14.38	16.67	–2.29
976	625	240	976	19.29	16.67	2.63
912	625	240	912	13.63	16.67	–3.04
984	625	240	984	19.95	16.67	3.28
904	625	240	904	12.87	16.67	–3.80
992	625	240	992	20.60	16.67	3.93
1000	625	240	1000	21.23	16.67	4.56
896	625	240	896	12.09	16.67	–4.58
1000	620	242	992	20.60	15.97	4.62
1000	615	244	984	19.95	15.28	4.67
1000	610	246	976	19.29	14.58	4.71
1000	605	248	968	18.63	13.89	4.74
1000	600	250	960	17.95	13.19	4.75
1000	630	239	1008	21.86	17.01	4.84
1000	575	261	920	14.38	9.38	5.01
1000	580	259	928	15.12	10.07	5.05
1000	585	257	936	15.84	10.76	5.08
1000	590	255	944	16.56	11.46	5.10
1000	595	253	952	17.26	12.15	5.11
1008	625	240	1008	21.86	16.67	5.19
888	625	240	888	11.30	16.67	–5.37
880	625	240	880	10.49	16.67	–6.18
872	625	240	872	9.67	16.67	–7.00

Table A-9. Overscan Values, 640 x 480 PAL-BDGHI, Character Clock-Based Controller, 9-Pixel Resolution, 2.5 µs HBlank

Controller Pixels		Encoder Pixels		Overscan (Percent)		
Total		Active	Total			
H_CLKI	V_LINESI	V_ACTIVEO	H_CLKO	Horizontal	Vertical	Resolution
945	625	240	945	16.65	16.67	–0.02
954	625	240	954	17.43	16.67	0.77
936	625	240	936	15.84	16.67	–0.82
963	625	240	963	18.20	16.67	1.54
927	625	240	927	15.03	16.67	–1.64
972	625	240	972	18.96	16.67	2.30
918	625	240	918	14.19	16.67	–2.47
981	625	240	981	19.71	16.67	3.04
909	625	240	909	13.35	16.67	–3.32
990	625	240	990	20.44	16.67	3.77
900	650	231	936	15.84	19.79	–3.95
900	625	240	900	12.48	16.67	–4.19
999	625	240	999	21.15	16.67	4.49
891	625	240	891	11.59	16.67	–5.07
1008	625	240	1008	21.86	16.67	5.19
882	625	240	882	10.69	16.67	–5.97
873	625	240	873	9.77	16.67	–6.89

Table A-10. Overscan Values, 800 x 600 NTSC, Pixel-Based Controller, 1-Pixel Resolution (1 of 4)

Controller Pixels		Encoder Pixels		Overscan (Percent)		
Total		Active	Total			
H_CLKI	V_LINESI	V_ACTIVEO	H_CLKO	Horizontal	Vertical	Resolution
800	777	203	1184	18.45	16.46	1.98
800	819	193	1248	22.63	20.58	2.05
800	798	198	1216	20.59	18.52	2.07
800	756	209	1152	16.18	13.99	2.19
800	714	221	1088	11.25	9.05	2.20
800	735	215	1120	13.79	11.52	2.26
805	825	191	1265	23.67	21.40	2.27
805	780	202	1196	19.26	16.87	2.39
805	750	210	1150	16.03	13.58	2.45
805	765	206	1173	17.68	15.23	2.45
805	810	195	1242	22.25	19.75	2.50
805	720	219	1104	12.54	9.88	2.66
805	795	199	1219	20.79	18.11	2.68
805	735	215	1127	14.32	11.52	2.80
810	805	196	1242	22.25	19.34	2.91
810	770	205	1188	18.72	15.64	3.08
812	750	210	1160	16.76	13.58	3.18
810	735	215	1134	14.85	11.52	3.33
819	800	197	1248	22.63	18.93	3.70
815	735	215	1141	15.37	11.52	3.85
819	750	210	1170	17.47	13.58	3.89
819	775	204	1209	20.13	16.05	4.08
825	805	196	1265	23.67	19.34	4.33
819	725	218	1131	14.62	10.29	4.34
825	784	201	1232	21.62	17.28	4.34
820	735	215	1148	15.89	11.52	4.37
825	777	203	1221	20.92	16.46	4.46
825	798	198	1254	23.00	18.52	4.48
825	770	205	1210	20.20	15.64	4.56
826	750	210	1180	18.17	13.58	4.59
825	791	200	1243	22.32	17.70	4.62

Table A-10. Overscan Values, 800 x 600 NTSC, Pixel-Based Controller, 1-Pixel Resolution (2 of 4)

Controller Pixels		Encoder Pixels		Overscan (Percent)		
Total		Active	Total			
H_CLKI	V_LINESI	V_ACTIVEO	H_CLKO	Horizontal	Vertical	Resolution
825	763	207	1199	19.47	14.81	4.65
825	756	209	1188	18.72	13.99	4.73
825	749	211	1177	17.96	13.17	4.79
825	742	213	1166	17.19	12.35	4.84
825	735	215	1155	16.40	11.52	4.88
825	714	221	1122	13.94	9.05	4.89
825	728	217	1144	15.59	10.70	4.89
825	721	219	1133	14.77	9.88	4.90
833	750	210	1190	18.86	13.58	5.28
830	735	215	1162	16.90	11.52	5.38
840	780	202	1248	22.63	16.87	5.76
840	785	201	1256	23.12	17.28	5.84
835	735	215	1169	17.40	11.52	5.88
840	765	206	1224	21.11	15.23	5.88
840	790	200	1264	23.61	17.70	5.91
840	750	210	1200	19.53	13.58	5.95
840	770	205	1232	21.62	15.64	5.99
840	755	209	1208	20.07	13.99	6.07
840	775	204	1240	22.13	16.05	6.08
840	740	213	1184	18.45	12.35	6.10
840	760	208	1216	20.59	14.40	6.19
840	730	216	1168	17.33	11.11	6.22
840	745	212	1192	18.99	12.76	6.24
840	720	219	1152	16.18	9.88	6.30
840	735	215	1176	17.89	11.52	6.37
840	725	218	1160	16.76	10.29	6.47
840	715	221	1144	15.59	9.05	6.54
847	750	210	1210	20.20	13.58	6.62
850	777	203	1258	23.24	16.46	6.78
845	735	215	1183	18.38	11.52	6.85
850	756	209	1224	21.11	13.99	7.12

Table A-10. Overscan Values, 800 x 600 NTSC, Pixel-Based Controller, 1-Pixel Resolution (3 of 4)

Controller Pixels		Encoder Pixels		Overscan (Percent)		
Total		Active	Total			
H_CLKI	V_LINESI	V_ACTIVEO	H_CLKO	Horizontal	Vertical	Resolution
854	750	210	1220	20.85	13.58	7.27
850	735	215	1190	18.86	11.52	7.33
855	770	205	1254	23.00	15.64	7.36
850	714	221	1156	16.47	9.05	7.42
855	735	215	1197	19.33	11.52	7.81
861	750	210	1230	21.50	13.58	7.92
861	775	204	1271	24.03	16.05	7.98
860	735	215	1204	19.80	11.52	8.28
861	725	218	1189	18.79	10.29	8.50
868	750	210	1240	22.13	13.58	8.55
865	735	215	1211	20.26	11.52	8.74
875	762	207	1270	23.97	14.81	9.15
875	750	210	1250	22.75	13.58	9.17
870	735	215	1218	20.72	11.52	9.20
875	759	208	1265	23.67	14.40	9.26
875	747	211	1245	22.44	13.17	9.27
875	744	212	1240	22.13	12.76	9.37
875	756	209	1260	23.36	13.99	9.37
875	741	213	1235	21.81	12.35	9.47
875	753	210	1255	23.06	13.58	9.48
875	726	217	1210	20.20	10.70	9.50
875	738	214	1230	21.50	11.93	9.56
875	723	218	1205	19.87	10.29	9.58
875	735	215	1225	21.18	11.52	9.65
875	720	219	1200	19.53	9.88	9.66
875	717	220	1195	19.20	9.47	9.73
875	732	216	1220	20.85	11.11	9.74
882	750	210	1260	23.36	13.58	9.78
875	714	221	1190	18.86	9.05	9.80
875	729	217	1215	20.53	10.70	9.83
880	735	215	1232	21.62	11.52	10.10

Table A-10. Overscan Values, 800 x 600 NTSC, Pixel-Based Controller, 1-Pixel Resolution (4 of 4)

Controller Pixels		Encoder Pixels		Overscan (Percent)		
Total		Active	Total			
H_CLKI	V_LINESI	V_ACTIVEO	H_CLKO	Horizontal	Vertical	Resolution
889	750	210	1270	23.97	13.58	10.39
882	725	218	1218	20.72	10.29	10.43
885	735	215	1239	22.07	11.52	10.54
890	735	215	1246	22.50	11.52	10.98
895	735	215	1253	22.94	11.52	11.41
900	735	215	1260	23.36	11.52	11.84
900	728	217	1248	22.63	10.70	11.93
900	721	219	1236	21.88	9.88	12.00
900	714	221	1224	21.11	9.05	12.06
905	735	215	1267	23.79	11.52	12.27
903	725	218	1247	22.57	10.29	12.28
910	720	219	1248	22.63	9.88	12.75
925	714	221	1258	23.24	9.05	14.19

Table A-11. Overscan Values, 800 x 600 NTSC, Character Clock-Based Controller, 8-Pixel Resolution, 0–1.5 µs HBlank

Controller Pixels		Encoder Pixels		Overscan (Percent)		
Total		Active	Total			
H_CLKI	V_LINESI	V_ACTIVEO	H_CLKO	Horizontal	Vertical	Resolution
800	777	203	1184	18.45	16.46	1.98
800	819	193	1248	22.63	20.58	2.05
800	798	198	1216	20.59	18.52	2.07
800	756	209	1152	16.18	13.99	2.19
800	714	221	1088	11.25	9.05	2.20
800	735	215	1120	13.79	11.52	2.26
840	780	202	1248	22.63	16.87	5.76
840	785	201	1256	23.12	17.28	5.84
840	765	206	1224	21.11	15.23	5.88
840	790	200	1264	23.61	17.70	5.91
840	750	210	1200	19.53	13.58	5.95
840	770	205	1232	21.62	15.64	5.99
840	755	209	1208	20.07	13.99	6.07
840	775	204	1240	22.13	16.05	6.08
840	740	213	1184	18.45	12.35	6.10
840	760	208	1216	20.59	14.40	6.19
840	730	216	1168	17.33	11.11	6.22
840	745	212	1192	18.99	12.76	6.24
840	720	219	1152	16.18	9.88	6.30
840	735	215	1176	17.89	11.52	6.37
840	725	218	1160	16.76	10.29	6.47
840	715	221	1144	15.59	9.05	6.54
880	735	215	1232	21.62	11.52	10.10

Table A-12. Overscan Values, 800 x 600 NTSC, Character Clock-Based Controller, 9-Pixel Resolution, 0–3.0 µs HBlank

Controller Pixels		Encoder Pixels		Overscan (Percent)		
Total		Active	Total			
H_CLKI	V_LINESI	V_ACTIVEO	H_CLKO	Horizontal	Vertical	Resolution
810	805	196	1242	22.25	19.34	2.91
810	770	205	1188	18.72	15.64	3.08
810	735	215	1134	14.85	11.52	3.33
819	800	197	1248	22.63	18.93	3.70
819	750	210	1170	17.47	13.58	3.89
819	775	204	1209	20.13	16.05	4.08
819	725	218	1131	14.62	10.29	4.34
855	770	205	1254	23.00	15.64	7.36
855	735	215	1197	19.33	11.52	7.81
882	750	210	1260	23.36	13.58	9.78
882	725	218	1218	20.72	10.29	10.43
900	735	215	1260	23.36	11.52	11.84
900	728	217	1248	22.63	10.70	11.93
900	721	219	1236	21.88	9.88	12.00
900	714	221	1224	21.11	9.05	12.06

Table A-13. Overscan Values 800 x 600 NTSC, Pixel-Based Controller, 1-Pixel Resolution, 3:2 Clocking Mode (1 of 4)

Controller Pixels		Encoder Pixels		Overscan (Percent)		
Total		Active	Total			
H_CLKI	V_LINESI	V_ACTIVEO	H_CLKO	Horizontal	Vertical	Delta
1170	770	205	1144	15.59	15.64	–0.04
1170	735	215	1092	11.57	11.52	0.05
1170	805	196	1196	19.26	19.34	–0.08
1176	750	210	1120	13.79	13.58	0.21
1176	825	191	1232	21.62	21.40	0.22
1175	756	209	1128	14.40	13.99	0.40
1175	819	193	1222	20.98	20.58	0.41
1155	795	199	1166	17.19	18.11	–0.92
1155	810	195	1188	18.72	19.75	–1.03
1155	735	215	1078	10.43	11.52	–1.10
1185	735	215	1106	12.69	11.52	1.17
1155	825	191	1210	20.20	21.40	–1.20
1190	765	206	1156	16.47	15.23	1.24
1155	780	202	1144	15.59	16.87	–1.28
1155	765	206	1122	13.94	15.23	–1.29
1150	819	193	1196	19.26	20.58	–1.31
1190	810	195	1224	21.11	19.75	1.36
1155	750	210	1100	12.22	13.58	–1.36
1190	720	219	1088	11.25	9.88	1.37
1150	756	209	1104	12.54	13.99	–1.46
1197	800	197	1216	20.59	18.93	1.66
1197	750	210	1140	15.30	13.58	1.72
1197	775	204	1178	18.03	16.05	1.98
1200	777	203	1184	18.45	16.46	1.98
1200	798	198	1216	20.59	18.52	2.07
1197	725	218	1102	12.38	10.29	2.09
1200	756	209	1152	16.18	13.99	2.19
1200	714	221	1088	11.25	9.05	2.20
1200	735	215	1120	13.79	11.52	2.26
1140	735	215	1064	9.25	11.52	–2.27

Table A-13. Overscan Values 800 x 600 NTSC, Pixel-Based Controller, 1-Pixel Resolution, 3:2 Clocking Mode (2 of 4)

Controller Pixels		Encoder Pixels		Overscan (Percent)		
Total		Active	Total			
H_CLKI	V_LINESI	V_ACTIVEO	H_CLKO	Horizontal	Vertical	Delta
1134	775	204	1116	13.48	16.05	–2.57
1134	825	191	1188	18.72	21.40	–2.68
1134	800	197	1152	16.18	18.93	–2.75
1134	750	210	1080	10.59	13.58	–2.99
1215	770	205	1188	18.72	15.64	3.08
1125	819	193	1170	17.47	20.58	–3.11
1125	791	200	1130	14.55	17.70	–3.15
1218	750	210	1160	16.76	13.58	3.18
1125	798	198	1140	15.30	18.52	–3.22
1125	826	191	1180	18.17	21.40	–3.23
1125	805	196	1150	16.03	19.34	–3.31
1215	735	215	1134	14.85	11.52	3.33
1125	756	209	1080	10.59	13.99	–3.40
1125	763	207	1090	11.41	14.81	–3.40
1125	812	194	1160	16.76	20.16	–3.41
1125	749	211	1070	9.76	13.17	–3.41
1125	770	205	1100	12.22	15.64	–3.42
1125	777	203	1110	13.01	16.46	–3.45
1125	784	201	1120	13.79	17.28	–3.50
1225	792	199	1232	21.62	18.11	3.52
1120	810	195	1152	16.18	19.75	–3.57
1225	765	206	1190	18.86	15.23	3.63
1225	747	211	1162	16.90	13.17	3.73
1225	774	204	1204	19.80	16.05	3.75
1225	783	202	1218	20.72	16.87	3.85
1225	756	209	1176	17.89	13.99	3.90
1225	720	219	1120	13.79	9.88	3.91
1225	738	214	1148	15.89	11.93	3.95
1120	765	206	1088	11.25	15.23	–3.98
1225	729	217	1134	14.85	10.70	4.15

Table A-13. Overscan Values 800 x 600 NTSC, Pixel-Based Controller, 1-Pixel Resolution, 3:2 Clocking Mode (3 of 4)

Controller Pixels		Encoder Pixels		Overscan (Percent)		
Total		Active	Total			
H_CLKI	V_LINESI	V_ACTIVEO	H_CLKO	Horizontal	Vertical	Delta
1113	825	191	1166	17.19	21.40	–4.21
1230	735	215	1148	15.89	11.52	4.37
1239	750	210	1180	18.17	13.58	4.59
1100	819	193	1144	15.59	20.58	–4.98
1245	735	215	1162	16.90	11.52	5.38
1250	756	209	1200	19.53	13.99	5.54
1092	825	191	1144	15.59	21.40	–5.81
1260	765	206	1224	21.11	15.23	5.88
1260	750	210	1200	19.53	13.58	5.95
1260	770	205	1232	21.62	15.64	5.99
1260	755	209	1208	20.07	13.99	6.07
1260	740	213	1184	18.45	12.35	6.10
1260	760	208	1216	20.59	14.40	6.19
1260	730	216	1168	17.33	11.11	6.22
1260	745	212	1192	18.99	12.76	6.24
1085	810	195	1116	13.48	19.75	–6.28
1260	720	219	1152	16.18	9.88	6.30
1260	735	215	1176	17.89	11.52	6.37
1260	725	218	1160	16.76	10.29	6.47
1260	715	221	1144	15.59	9.05	6.54
1080	805	196	1104	12.54	19.34	–6.81
1075	819	193	1118	13.63	20.58	–6.95
1275	756	209	1224	21.11	13.99	7.12
1281	750	210	1220	20.85	13.58	7.27
1275	735	215	1190	18.86	11.52	7.33
1275	714	221	1156	16.47	9.05	7.42
1071	825	191	1122	13.94	21.40	–7.46
1071	800	197	1088	11.25	18.93	–7.68
1290	735	215	1204	19.80	11.52	8.28
1295	720	219	1184	18.45	9.88	8.57
1050	828	191	1104	12.54	21.40	–8.86

Table A-13. Overscan Values 800 x 600 NTSC, Pixel-Based Controller, 1-Pixel Resolution, 3:2 Clocking Mode (4 of 4)

Controller Pixels		Encoder Pixels		Overscan (Percent)		
Total		Active	Total			
H_CLKI	V_LINESI	V_ACTIVEO	H_CLKO	Horizontal	Vertical	Delta
1050	816	194	1088	11.25	20.16	–8.92
1050	831	190	1108	12.85	21.81	–8.96
1050	819	193	1092	11.57	20.58	–9.00
1050	807	196	1076	10.26	19.34	–9.08
1050	822	192	1096	11.90	20.99	–9.09
1050	810	195	1080	10.59	19.75	–9.16
1050	825	191	1100	12.22	21.40	–9.18
1305	735	215	1218	20.72	11.52	9.20
1050	813	194	1084	10.92	20.16	–9.24
1050	798	198	1064	9.25	18.52	–9.27
1050	801	197	1068	9.59	18.93	–9.34
1050	804	196	1072	9.92	19.34	–9.42
1320	735	215	1232	21.62	11.52	10.10
1323	725	218	1218	20.72	10.29	10.43
1330	720	219	1216	20.59	9.88	10.72
1029	825	191	1078	10.43	21.40	–10.97
1025	819	193	1066	9.42	20.58	–11.16
1350	721	219	1236	21.88	9.88	12.00
1350	714	221	1224	21.11	9.05	12.06

Table A-14. Overscan Values 800 x 600 NTSC, Character Clocked-Based Controller, 8-Pixel Resolution, 3:2 Clocking Mode

Controller Pixels		Encoder Pixels		Overscan (Percent)		
Total		Active	Total			
H_CLKI	V_LINESI	V_ACTIVEO	H_CLKO	Horizontal	Vertical	Delta
1176	750	210	1120	13.79	13.58	0.21
1176	825	191	1232	21.62	21.40	0.22
1200	777	203	1184	18.45	16.46	1.98
1200	798	198	1216	20.59	18.52	2.07
1200	756	209	1152	16.18	13.99	2.19
1200	714	221	1088	11.25	9.05	2.20
1200	735	215	1120	13.79	11.52	2.26
1120	810	195	1152	16.18	19.75	–3.57
1120	765	206	1088	11.25	15.23	–3.98
1080	805	196	1104	12.54	19.34	–6.81
1320	735	215	1232	21.62	11.52	10.10

Table A-15. Overscan Values 800 x 600 NTSC, Character Clocked-Based Controller, 9-Pixel Resolution, 3:2 Clocking Mode (1 of 2)

Controller Pixels		Encoder Pixels		Overscan (Percent)		
Total		Active	Total			
H_CLKI	V_LINESI	V_ACTIVEO	H_CLKO	Horizontal	Vertical	Delta
1170	770	205	1144	15.59	15.64	–0.04
1170	735	215	1092	11.57	11.52	0.05
1170	805	196	1196	19.26	19.34	–0.08
1197	800	197	1216	20.59	18.93	1.66
1197	750	210	1140	15.30	13.58	1.72
1197	775	204	1178	18.03	16.05	1.98
1197	725	218	1102	12.38	10.29	2.09
1134	775	204	1116	13.48	16.05	–2.57
1134	825	191	1188	18.72	21.40	–2.68
1134	800	197	1152	16.18	18.93	–2.75
1134	750	210	1080	10.59	13.58	–2.99
1215	770	205	1188	18.72	15.64	3.08
1125	819	193	1170	17.47	20.58	–3.11
1125	791	200	1130	14.55	17.70	–3.15
1125	798	198	1140	15.30	18.52	–3.22
1125	826	191	1180	18.17	21.40	–3.23
1125	805	196	1150	16.03	19.34	–3.31
1215	735	215	1134	14.85	11.52	3.33
1125	756	209	1080	10.59	13.99	–3.40
1125	763	207	1090	11.41	14.81	–3.40
1125	812	194	1160	16.76	20.16	–3.41
1125	749	211	1070	9.76	13.17	–3.41
1125	770	205	1100	12.22	15.64	–3.42
1125	777	203	1110	13.01	16.46	–3.45
1125	784	201	1120	13.79	17.28	–3.50
1260	765	206	1224	21.11	15.23	5.88
1260	750	210	1200	19.53	13.58	5.95
1260	770	205	1232	21.62	15.64	5.99
1260	755	209	1208	20.07	13.99	6.07
1260	740	213	1184	18.45	12.35	6.10

Table A-15. Overscan Values 800 x 600 NTSC, Character Clocked-Based Controller, 9-Pixel Resolution, 3:2 Clocking Mode (2 of 2)

Controller Pixels		Encoder Pixels		Overscan (Percent)		
Total		Active	Total			
H_CLKI	V_LINESI	V_ACTIVEO	H_CLKO	Horizontal	Vertical	Delta
1260	760	208	1216	20.59	14.40	6.19
1260	730	216	1168	17.33	11.11	6.22
1260	745	212	1192	18.99	12.76	6.24
1260	720	219	1152	16.18	9.88	6.30
1260	735	215	1176	17.89	11.52	6.37
1260	725	218	1160	16.76	10.29	6.47
1260	715	221	1144	15.59	9.05	6.54
1080	805	196	1104	12.54	19.34	–6.81
1071	825	191	1122	13.94	21.40	–7.46
1071	800	197	1088	11.25	18.93	–7.68
1305	735	215	1218	20.72	11.52	9.20
1323	725	218	1218	20.72	10.29	10.43
1350	721	219	1236	21.88	9.88	12.00
1350	714	221	1224	21.11	9.05	12.06

Table A-16. Overscan Values, 800 x 600 PAL-BDGHI, Pixel-Based Controller, 1-Pixel Resolution, >2.5 µs HBlank (1 of 2)

Controller Pixels		Encoder Pixels		Overscan (Percent)		
Total		Active	Total			
H_CLKI	V_LINESI	V_ACTIVEO	H_CLKO	Horizontal	Vertical	Resolution
945	750	250	1134	13.17	13.19	–0.02
950	750	250	1140	13.63	13.19	0.44
950	775	242	1178	16.42	15.97	0.44
940	750	250	1128	12.71	13.19	–0.48
950	725	259	1102	10.65	10.07	0.58
950	800	235	1216	19.03	18.40	0.63
950	825	228	1254	21.48	20.83	0.65
955	750	250	1146	14.08	13.19	0.89
935	750	250	1122	12.24	13.19	–0.95
960	750	250	1152	14.53	13.19	1.34
930	750	250	1116	11.77	13.19	–1.42
925	825	228	1221	19.36	20.83	–1.47
925	800	235	1184	16.84	18.40	–1.56
965	750	250	1158	14.97	13.19	1.78
925	775	242	1147	14.16	15.97	–1.81
925	750	250	1110	11.30	13.19	–1.90
970	750	250	1164	15.41	13.19	2.22
920	750	250	1104	10.81	13.19	–2.38
975	775	242	1209	18.56	15.97	2.59
975	750	250	1170	15.84	13.19	2.65
975	800	235	1248	21.10	18.40	2.70
915	750	250	1098	10.33	13.19	–2.87
975	725	259	1131	12.94	10.07	2.87
980	750	250	1176	16.27	13.19	3.08
910	750	250	1092	9.83	13.19	–3.36
985	750	250	1182	16.70	13.19	3.50
900	825	228	1188	17.12	20.83	–3.71
905	750	250	1086	9.34	13.19	–3.86
900	800	235	1152	14.53	18.40	–3.87
990	750	250	1188	17.12	13.19	3.93
900	775	242	1116	11.77	15.97	–4.20

Table A-16. Overscan Values, 800 x 600 PAL-BDGHI, Pixel-Based Controller, 1-Pixel Resolution, >2.5 µs HBlank (2 of 2)

Controller Pixels		Encoder Pixels		Overscan (Percent)		
Total		Active	Total			
H_CLKI	V_LINESI	V_ACTIVEO	H_CLKO	Horizontal	Vertical	Resolution
995	750	250	1194	17.54	13.19	4.34
1000	785	239	1256	21.61	17.01	4.59
1000	775	242	1240	20.60	15.97	4.62
1000	750	250	1200	17.95	13.19	4.75
1000	780	241	1248	21.10	16.32	4.79
1000	760	247	1216	19.03	14.24	4.79
1000	770	244	1232	20.08	15.28	4.80
1000	745	252	1192	17.40	12.50	4.90
1000	730	257	1168	15.70	10.76	4.94
1000	755	249	1208	18.49	13.54	4.95
1000	765	246	1224	19.56	14.58	4.97

Table A-17. Overscan Values, 800 x 600 PAL-BDGHI, Character Clock-Based Controller, 8-Pixel Resolution

Controller Pixels		Encoder Pixels		Overscan (Percent)		
Total		Active	Total			
H_CLKI	V_LINESI	V_ACTIVEO	H_CLKO	Horizontal	Vertical	Resolution
960	750	250	1152	14.53	13.19	1.34
920	750	250	1104	10.81	13.19	–2.38
1000	785	239	1256	21.61	17.01	4.59
1000	775	242	1240	20.60	15.97	4.62
1000	750	250	1200	17.95	13.19	4.75
1000	780	241	1248	21.10	16.32	4.79
1000	760	247	1216	19.03	14.24	4.79
1000	770	244	1232	20.08	15.28	4.80
1000	745	252	1192	17.40	12.50	4.90
1000	730	257	1168	15.70	10.76	4.94
1000	755	249	1208	18.49	13.54	4.95
1000	765	246	1224	19.56	14.58	4.97
1000	740	254	1184	16.84	11.81	5.03
1000	725	259	1160	15.12	10.07	5.05
1000	720	261	1152	14.53	9.38	5.15
1000	735	256	1176	16.27	11.11	5.16
1000	715	263	1144	13.93	8.68	5.25
1040	750	250	1248	21.10	13.19	7.91

Table A-18. Overscan Values, 800 x 600 PAL-BDGHI, Character Clock-Based Controller, 9-Pixel Resolution

Controller Pixels		Encoder Pixels		Overscan (Percent)		
Total		Active	Total			
H_CLKI	V_LINESI	V_ACTIVEO	H_CLKO	Horizontal	Vertical	Resolution
945	750	250	1134	13.17	13.19	–0.02
900	825	228	1188	17.12	20.83	–3.71
900	800	235	1152	14.53	18.40	–3.87
990	750	250	1188	17.12	13.19	3.93
900	775	242	1116	11.77	15.97	–4.20
1035	750	250	1242	20.72	13.19	7.53

Table A-19. Overscan Values 800 x 600 PAL-BDGHI, Pixel-Based Controller, 1-Pixel Resolution, 3:2 Clocking Mode (1 of 3)

Controller Pixels		Encoder Pixels		Overscan (Percent)		
Total		Active	Total			
H_CLKI	V_LINESI	V_ACTIVEO	H_CLKO	Horizontal	Vertical	Delta
1420	750	250	1136	13.33	13.19	0.13
1415	750	250	1132	13.02	13.19	–0.17
1425	750	250	1140	13.63	13.19	0.44
1425	775	242	1178	16.42	15.97	0.44
1410	750	250	1128	12.71	13.19	–0.48
1425	725	259	1102	10.65	10.07	0.58
1425	800	235	1216	19.03	18.40	0.63
1425	825	228	1254	21.48	20.83	0.65
1430	750	250	1144	13.93	13.19	0.74
1400	825	228	1232	20.08	20.83	–0.75
1405	750	250	1124	12.40	13.19	–0.79
1435	750	250	1148	14.23	13.19	1.04
1400	750	250	1120	12.09	13.19	–1.11
1440	750	250	1152	14.53	13.19	1.34
1395	750	250	1116	11.77	13.19	–1.42
1445	750	250	1156	14.83	13.19	1.63
1390	750	250	1112	11.46	13.19	–1.74
1450	750	250	1160	15.12	13.19	1.92
1385	750	250	1108	11.14	13.19	–2.06
1375	825	228	1210	18.63	20.83	–2.21
1455	750	250	1164	15.41	13.19	2.22
1375	810	232	1188	17.12	19.44	–2.32
1375	765	246	1122	12.24	14.58	–2.34
1380	750	250	1104	10.81	13.19	–2.38
1375	780	241	1144	13.93	16.32	–2.39
1375	795	236	1166	15.56	18.06	–2.50
1460	750	250	1168	15.70	13.19	2.51
1375	750	250	1100	10.49	13.19	–2.70
1465	750	250	1172	15.99	13.19	2.79
1370	750	250	1096	10.16	13.19	–3.03

Table A-19. Overscan Values 800 x 600 PAL-BDGHI, Pixel-Based Controller, 1-Pixel Resolution, 3:2 Clocking Mode (2 of 3)

Controller Pixels		Encoder Pixels		Overscan (Percent)		
Total		Active	Total			
H_CLKI	V_LINESI	V_ACTIVEO	H_CLKO	Horizontal	Vertical	Delta
1470	750	250	1176	16.27	13.19	3.08
1365	750	250	1092	9.83	13.19	–3.36
1475	750	250	1180	16.56	13.19	3.36
1480	750	250	1184	16.84	13.19	3.65
1360	750	250	1088	9.50	13.19	–3.69
1350	825	228	1188	17.12	20.83	–3.71
1350	800	235	1152	14.53	18.40	–3.87
1485	750	250	1188	17.12	13.19	3.93
1355	750	250	1084	9.17	13.19	–4.03
1350	775	242	1116	11.77	15.97	–4.20
1490	750	250	1192	17.40	13.19	4.20
1495	750	250	1196	17.67	13.19	4.48
1500	785	239	1256	21.61	17.01	4.59
1500	775	242	1240	20.60	15.97	4.62
1500	750	250	1200	17.95	13.19	4.75
1500	780	241	1248	21.10	16.32	4.79
1500	760	247	1216	19.03	14.24	4.79
1500	770	244	1232	20.08	15.28	4.80
1500	745	252	1192	17.40	12.50	4.90
1500	730	257	1168	15.70	10.76	4.94
1500	755	249	1208	18.49	13.54	4.95
1500	765	246	1224	19.56	14.58	4.97
1505	750	250	1204	18.22	13.19	5.03
1500	740	254	1184	16.84	11.81	5.03
1500	725	259	1160	15.12	10.07	5.05
1500	720	261	1152	14.53	9.38	5.15
1500	735	256	1176	16.27	11.11	5.16
1500	715	263	1144	13.93	8.68	5.25
1325	825	228	1166	15.56	20.83	–5.28
1510	750	250	1208	18.49	13.19	5.30

Table A-19. Overscan Values 800 x 600 PAL-BDGHI, Pixel-Based Controller, 1-Pixel Resolution, 3:2 Clocking Mode (3 of 3)

Controller Pixels		Encoder Pixels		Overscan (Percent)		
Total		Active	Total			
H_CLKI	V_LINESI	V_ACTIVEO	H_CLKO	Horizontal	Vertical	Delta
1515	750	250	1212	18.76	13.19	5.57
1520	750	250	1216	19.03	13.19	5.83
1525	750	250	1220	19.29	13.19	6.10
1530	750	250	1224	19.56	13.19	6.36
1535	750	250	1228	19.82	13.19	6.63
1540	750	250	1232	20.08	13.19	6.89
1300	825	228	1144	13.93	20.83	–6.90
1545	750	250	1236	20.34	13.19	7.14
1550	750	250	1240	20.60	13.19	7.40
1555	750	250	1244	20.85	13.19	7.66
1560	750	250	1248	21.10	13.19	7.91
1565	750	250	1252	21.36	13.19	8.16
1570	750	250	1256	21.61	13.19	8.41
1275	825	228	1122	12.24	20.83	–8.59
1575	750	250	1260	21.86	13.19	8.66
1275	800	235	1088	9.50	18.40	–8.90
1575	725	259	1218	19.16	10.07	9.09
1250	822	229	1096	10.16	20.49	–10.32
1250	825	228	1100	10.49	20.83	–10.34
1250	828	227	1104	10.81	21.18	–10.37
1250	831	226	1108	11.14	21.53	–10.39
1250	834	225	1112	11.46	21.88	–10.42
1250	813	231	1084	9.17	19.79	–10.62
1250	816	230	1088	9.50	20.14	–10.64
1250	819	229	1092	9.83	20.49	–10.65
1625	720	261	1248	21.10	9.38	11.73

Table A-20. Overscan Values 800 x 600 PAL-BDGHI, Character Clock-Based Controller, 8-Pixel Resolution, 3:2 Clocking Mode

Controller Pixels		Encoder Pixels		Overscan (Percent)		
Total		Active	Total			
H_CLKI	V_LINESI	V_ACTIVEO	H_CLKO	Horizontal	Vertical	Delta
1400	825	228	1232	20.08	20.83	–0.75
1400	750	250	1120	12.09	13.19	–1.11
1440	750	250	1152	14.53	13.19	1.34
1480	750	250	1184	16.84	13.19	3.65
1360	750	250	1088	9.50	13.19	–3.69
1520	750	250	1216	19.03	13.19	5.83
1560	750	250	1248	21.10	13.19	7.91

Table A-21. Overscan Values 800 x 600 PAL-BDGHI, Character Clock-Based Controller, 9-Pixel Resolution, 3:2 Clocking Mode

Controller Pixels		Encoder Pixels		Overscan (Percent)		
Total		Active	Total			
H_CLKI	V_LINESI	V_ACTIVEO	H_CLKO	Horizontal	Vertical	Delta
1440	750	250	1152	14.53	13.19	1.34
1395	750	250	1116	11.77	13.19	–1.42
1350	825	228	1188	17.12	20.83	–3.71
1350	800	235	1152	14.53	18.40	–3.87
1485	750	250	1188	17.12	13.19	3.93
1350	775	242	1116	11.77	15.97	–4.20
1530	750	250	1224	19.56	13.19	6.36
1575	750	250	1260	21.86	13.19	8.66
1575	725	259	1218	19.16	10.07	9.09

Table A-22. Overscan Values 1024 x 768 NTSC, Pixel-Based Controller, 1-Pixel Resolution, >1.50 µs. Hblank (1 of 4)

Graphics Controller		Encoder Pixels		Overscan (Percent)		
Total		Active	Total			
H_CLKI	V_LINESI	V_ACTIVEO	H_CLKO	Horizontal	Vertical	Delta
1173	1050	192	1564	20.97	20.99	-0.01
1170	945	214	1404	11.97	11.93	0.03
1170	1015	199	1508	18.04	18.11	-0.07
1170	980	206	1456	15.11	15.23	-0.11
1175	1008	200	1504	17.82	17.7	0.13
1176	1050	192	1568	21.18	20.99	0.19
1170	1050	192	1560	20.77	20.99	-0.22
1176	975	207	1456	15.11	14.81	0.3
1165	945	214	1398	11.59	11.93	-0.34
1179	1050	192	1572	21.38	20.99	0.39
1175	945	214	1410	12.34	11.93	0.41
1167	1050	192	1556	20.57	20.99	-0.42
1182	1050	192	1576	21.58	20.99	0.59
1164	1050	192	1552	20.36	20.99	-0.63
1160	945	214	1392	11.21	11.93	-0.73
1180	945	214	1416	12.71	11.93	0.78
1185	1050	192	1580	21.77	20.99	0.79
1161	1050	192	1548	20.16	20.99	-0.83
1188	1050	192	1584	21.97	20.99	0.98
1158	1050	192	1544	19.95	20.99	-1.04
1155	945	214	1386	10.82	11.93	-1.11
1155	1005	201	1474	16.15	17.28	-1.14
1155	1020	198	1496	17.38	18.52	-1.14
1185	945	214	1422	13.08	11.93	1.15
1155	990	204	1452	14.88	16.05	-1.17
1155	1035	195	1518	18.58	19.75	-1.17
1190	1035	195	1564	20.97	19.75	1.22
1155	1050	192	1540	19.74	20.99	-1.25
1155	975	207	1430	13.57	14.81	-1.25
1155	930	217	1364	9.39	10.7	-1.31
1190	990	204	1496	17.38	16.05	1.33

Table A-22. Overscan Values 1024 x 768 NTSC, Pixel-Based Controller, 1-Pixel Resolution, >1.50 µs. Hblank (2 of 4)

Graphics Controller		Encoder Pixels		Overscan (Percent)		
Total		Active	Total			
H_CLKI	V_LINESI	V_ACTIVEO	H_CLKO	Horizontal	Vertical	Delta
1155	960	210	1408	12.22	13.58	-1.36
1152	1050	192	1536	19.53	20.99	-1.45
1150	945	214	1380	10.44	11.93	-1.5
1190	945	214	1428	13.45	11.93	1.51
1150	1008	200	1472	16.03	17.7	-1.66
1149	1050	192	1532	19.32	20.99	-1.66
1197	1025	197	1558	20.67	18.93	1.74
1197	975	207	1482	16.6	14.81	1.79
1197	925	218	1406	12.09	10.29	1.8
1197	1000	202	1520	18.69	16.87	1.81
1200	1029	196	1568	21.18	19.34	1.83
1200	1008	200	1536	19.53	17.7	1.84
1195	945	214	1434	13.81	11.93	1.88
1146	1050	192	1528	19.11	20.99	-1.88
1145	945	214	1374	10.05	11.93	-1.89
1200	966	209	1472	16.03	13.99	2.04
1197	950	213	1444	14.41	12.35	2.06
1143	1050	192	1524	18.9	20.99	-2.09
1200	987	205	1504	17.82	15.64	2.18
1200	945	214	1440	14.17	11.93	2.23
1140	945	214	1368	9.65	11.93	-2.28
1140	1050	192	1520	18.69	20.99	-2.3
1200	924	219	1408	12.22	9.88	2.34
1137	1050	192	1516	18.47	20.99	-2.52
1205	945	214	1446	14.52	11.93	2.59
1134	1025	197	1476	16.26	18.93	-2.67
1135	945	214	1362	9.25	11.93	-2.68
1134	950	213	1368	9.65	12.35	-2.69
1134	1000	202	1440	14.17	16.87	-2.7
1134	1050	192	1512	18.26	20.99	-2.73
1134	975	207	1404	11.97	14.81	-2.85

Table A-22. Overscan Values 1024 x 768 NTSC, Pixel-Based Controller, 1-Pixel Resolution, >1.50 µs. Hblank (3 of 4)

Graphics Controller		Encoder Pixels		Overscan (Percent)		
Total		Active	Total			
H_CLKI	V_LINESI	V_ACTIVEO	H_CLKO	Horizontal	Vertical	Delta
1210	945	214	1452	14.88	11.93	2.94
1215	1015	199	1566	21.07	18.11	2.97
1215	980	206	1512	18.26	15.23	3.03
1218	975	207	1508	18.04	14.81	3.22
1215	945	214	1458	15.23	11.93	3.29
1125	987	205	1410	12.34	15.64	-3.3
1125	973	208	1390	11.08	14.4	-3.32
1125	959	211	1370	9.78	13.17	-3.39
1225	1008	200	1568	21.18	17.7	3.48
1125	994	203	1420	12.96	16.46	-3.5
1125	980	206	1400	11.72	15.23	-3.51
1125	966	209	1380	10.44	13.99	-3.56
1225	999	202	1554	20.47	16.87	3.59
1125	952	212	1360	9.12	12.76	-3.64
1220	945	214	1464	15.58	11.93	3.64
1225	990	204	1540	19.74	16.05	3.69
1225	1017	199	1582	21.87	18.11	3.77
1225	981	206	1526	19.01	15.23	3.78
1225	972	208	1512	18.26	14.4	3.85
1225	963	210	1498	17.49	13.58	3.91
1225	954	212	1484	16.71	12.76	3.96
1225	918	220	1428	13.45	9.47	3.98
1225	945	214	1470	15.92	11.93	3.99
1225	927	218	1442	14.29	10.29	4
1225	936	216	1456	15.11	11.11	4
1230	945	214	1476	16.26	11.93	4.33
1239	975	207	1534	19.43	14.81	4.61
1235	945	214	1482	16.6	11.93	4.67
1240	945	214	1488	16.94	11.93	5
1245	945	214	1494	17.27	11.93	5.34
1250	945	214	1500	17.6	11.93	5.67

Table A-22. Overscan Values 1024 x 768 NTSC, Pixel-Based Controller, 1-Pixel Resolution, >1.50 µs. Hblank (4 of 4)

Graphics Controller		Encoder Pixels		Overscan (Percent)		
Total		Active	Total			
H_CLKI	V_LINESI	V_ACTIVEO	H_CLKO	Horizontal	Vertical	Delta
1260	990	204	1584	21.97	16.05	5.92
1260	985	205	1576	21.58	15.64	5.94
1260	980	206	1568	21.18	15.23	5.95
1260	960	210	1536	19.53	13.58	5.95
1260	975	207	1560	20.77	14.81	5.96
1260	965	209	1544	19.95	13.99	5.96
1260	970	208	1552	20.36	14.4	5.96
1255	945	214	1506	17.93	11.93	6
1260	925	218	1480	16.49	10.29	6.2
1260	930	217	1488	16.94	10.7	6.24
1260	935	216	1496	17.38	11.11	6.27
1260	940	215	1504	17.82	11.52	6.3
1260	945	214	1512	18.26	11.93	6.32
1260	950	213	1520	18.69	12.35	6.34
1260	955	212	1528	19.11	12.76	6.35
1260	915	221	1464	15.58	9.05	6.52
1260	920	220	1472	16.03	9.47	6.57
1265	945	214	1518	18.58	11.93	6.64
1270	945	214	1524	18.9	11.93	6.97
1275	966	209	1564	20.97	13.99	6.98

Table A-23. Overscan Values 1024 x 768 NTSC, Character Clock-Based Controller, 8-Pixel Resolution, >1.50 µs HBlank

Controller Pixels		Encoder Pixels		Overscan (Percent)		
Total		Active	Total			
H_CLKI	V_LINESI	V_ACTIVEO	H_CLKO	Horizontal	Vertical	Delta
1176	1050	192	1568	21.18	20.99	0.19
1176	975	207	1456	15.11	14.81	0.30
1160	945	214	1392	11.21	11.93	–0.73
1152	1050	192	1536	19.53	20.99	–1.45
1200	1029	196	1568	21.18	19.34	1.83
1200	1008	200	1536	19.53	17.70	1.84
1200	966	209	1472	16.03	13.99	2.04
1200	987	205	1504	17.82	15.64	2.18
1200	945	214	1440	14.17	11.93	2.23
1200	924	219	1408	12.22	9.88	2.34
1240	945	214	1488	16.94	11.93	5.00
1280	945	214	1536	19.53	11.93	7.60
1320	945	214	1584	21.97	11.93	10.04
1176	1050	192	1568	21.18	20.99	0.19
1176	975	207	1456	15.11	14.81	0.30
1160	945	214	1392	11.21	11.93	–0.73
1152	1050	192	1536	19.53	20.99	–1.45
1200	1029	196	1568	21.18	19.34	1.83
1200	1008	200	1536	19.53	17.70	1.84
1200	966	209	1472	16.03	13.99	2.04
1200	987	205	1504	17.82	15.64	2.18
1200	945	214	1440	14.17	11.93	2.23
1200	924	219	1408	12.22	9.88	2.34
1128	1050	192	1504	17.82	20.99	–3.17
1240	945	214	1488	16.94	11.93	5.00
1280	945	214	1536	19.53	11.93	7.60

Table A-24. Overscan Values 1024 x 768 NTSC, Character Clock-Based Controller, 9-Pixel Resolution (1 of 2)

Controller Pixels		Encoder Pixels		Overscan (Percent)		
Total		Active	Total			
H_CLKI	V_LINESI	V_ACTIVEO	H_CLKO	Horizontal	Vertical	Delta
1170	945	214	1404	11.97	11.93	0.03
1170	1015	199	1508	18.04	18.11	–0.07
1170	980	206	1456	15.11	15.23	–0.11
1170	1050	192	1560	20.77	20.99	–0.22
1179	1050	192	1572	21.38	20.99	0.39
1161	1050	192	1548	20.16	20.99	–0.83
1188	1050	192	1584	21.97	20.99	0.98
1152	1050	192	1536	19.53	20.99	–1.45
1197	1025	197	1558	20.67	18.93	1.74
1197	975	207	1482	16.60	14.81	1.79
1197	925	218	1406	12.09	10.29	1.80
1197	1000	202	1520	18.69	16.87	1.81
1197	950	213	1444	14.41	12.35	2.06
1143	1050	192	1524	18.90	20.99	–2.09
1134	1025	197	1476	16.26	18.93	–2.67
1134	950	213	1368	9.65	12.35	–2.69
1134	1000	202	1440	14.17	16.87	–2.70
1134	1050	192	1512	18.26	20.99	–2.73
1134	975	207	1404	11.97	14.81	–2.85
1215	1015	199	1566	21.07	18.11	2.97
1215	980	206	1512	18.26	15.23	3.03
1215	945	214	1458	15.23	11.93	3.29
1125	987	205	1410	12.34	15.64	–3.30
1125	1001	202	1430	13.57	16.87	–3.30
1125	973	208	1390	11.08	14.40	–3.32
1125	959	211	1370	9.78	13.17	–3.39
1125	994	203	1420	12.96	16.46	–3.50
1125	980	206	1400	11.72	15.23	–3.51
1125	966	209	1380	10.44	13.99	–3.56
1125	952	212	1360	9.12	12.76	–3.64

Table A-24. Overscan Values 1024 x 768 NTSC, Character Clock-Based Controller, 9-Pixel Resolution (2 of 2)

Controller Pixels		Encoder Pixels		Overscan (Percent)		
Total		Active	Total			
H_CLKI	V_LINESI	V_ACTIVEO	H_CLKO	Horizontal	Vertical	Delta
1260	990	204	1584	21.97	16.05	5.92
1260	985	205	1576	21.58	15.64	5.94
1260	980	206	1568	21.18	15.23	5.95
1260	960	210	1536	19.53	13.58	5.95
1260	975	207	1560	20.77	14.81	5.96
1260	965	209	1544	19.95	13.99	5.96
1260	970	208	1552	20.36	14.40	5.96
1260	925	218	1480	16.49	10.29	6.20
1260	930	217	1488	16.94	10.70	6.24
1260	935	216	1496	17.38	11.11	6.27
1260	940	215	1504	17.82	11.52	6.30
1260	945	214	1512	18.26	11.93	6.32
1260	950	213	1520	18.69	12.35	6.34
1260	955	212	1528	19.11	12.76	6.35
1260	915	221	1464	15.58	9.05	6.52
1260	920	220	1472	16.03	9.47	6.57

Table A-25. Overscan Values 1024 x 768 PAL-BDGHI, Pixel-Based Controller, 1-Pixel Resolution, >3 μs Hblank (1 of 3)

Graphics Controller		Encoder Pixels		Overscan (Percent)		
Total		Active	Total			
H_CLKI	V_LINESI	V_ACTIVEO	H_CLKO	Horizontal	Vertical	Delta
1425	1000	240	1520	17.09	16.67	0.42
1410	1000	240	1504	16.2	16.67	-0.46
1425	1050	229	1596	21.03	20.49	0.55
1425	950	253	1444	12.72	12.15	0.57
1425	925	260	1406	10.36	9.72	0.64
1425	1025	235	1558	19.11	18.4	0.7
1425	975	247	1482	14.96	14.24	0.72
1400	975	247	1456	13.44	14.24	-0.8
1400	1050	229	1568	19.62	20.49	-0.86
1440	1000	240	1536	17.95	16.67	1.28
1395	1000	240	1488	15.3	16.67	-1.36
1455	1000	240	1552	18.79	16.67	2.13
1450	975	247	1508	16.43	14.24	2.19
1375	1065	226	1562	19.31	21.53	-2.21
1380	1000	240	1472	14.38	16.67	-2.29
1375	1020	236	1496	15.75	18.06	-2.3
1375	1050	229	1540	18.16	20.49	-2.32
1375	975	247	1430	11.87	14.24	-2.37
1375	990	243	1452	13.2	15.62	-2.42
1375	1035	232	1518	16.98	19.44	-2.47
1375	1005	239	1474	14.5	17.01	-2.52
1375	960	250	1408	10.49	13.19	-2.7
1375	945	254	1386	9.07	11.81	-2.74
1470	1000	240	1568	19.62	16.67	2.96
1365	1000	240	1456	13.44	16.67	-3.23
1475	975	247	1534	17.84	14.24	3.61
1485	1000	240	1584	20.44	16.67	3.77
1350	1025	235	1476	14.61	18.4	-3.79
1350	1050	229	1512	16.65	20.49	-3.84
1350	975	247	1404	10.23	14.24	-4
1350	1000	240	1440	12.48	16.67	-4.19

Table A-25. Overscan Values 1024 x 768 PAL-BDGHI, Pixel-Based Controller, 1-Pixel Resolution, >3 μs Hblank (2 of 3)

Graphics Controller		Encoder Pixels		Overscan (Percent)		
Total		Active	Total			
H_CLKI	V_LINESI	V_ACTIVEO	H_CLKO	Horizontal	Vertical	Delta
1500	1000	240	1600	21.23	16.67	4.56
1500	1005	239	1608	21.62	17.01	4.61
1500	1010	238	1616	22.01	17.36	4.65
1500	980	245	1568	19.62	14.93	4.69
1500	985	244	1576	20.03	15.28	4.75
1500	960	250	1536	17.95	13.19	4.75
1500	990	243	1584	20.44	15.62	4.81
1500	965	249	1544	18.37	13.54	4.83
1500	945	254	1512	16.65	11.81	4.84
1500	995	242	1592	20.83	15.97	4.86
1500	970	248	1552	18.79	13.89	4.91
1500	950	253	1520	17.09	12.15	4.93
1500	975	247	1560	19.21	14.24	4.97
1500	935	257	1496	15.75	10.76	4.99
1500	920	261	1472	14.38	9.38	5.01
1500	955	252	1528	17.52	12.5	5.02
1500	940	256	1504	16.2	11.11	5.09
1500	925	260	1480	14.84	9.72	5.12
1335	1000	240	1424	11.5	16.67	-5.17
1500	930	259	1488	15.3	10.07	5.23
1500	915	263	1464	13.91	8.68	5.23
1515	1000	240	1616	22.01	16.67	5.34
1325	1050	229	1484	15.07	20.49	-5.41
1320	1000	240	1408	10.49	16.67	-6.18
1525	975	247	1586	20.54	14.24	6.3
1300	1050	229	1456	13.44	20.49	-7.05
1305	1000	240	1392	9.46	16.67	-7.21
1550	975	247	1612	21.82	14.24	7.58
1275	1050	229	1428	11.74	20.49	-8.74
1275	1025	235	1394	9.59	18.4	-8.81
1575	950	253	1596	21.03	12.15	8.88

Table A-25. Overscan Values 1024 x 768 PAL-BDGHI, Pixel-Based Controller, 1-Pixel Resolution, >3 μs Hblank (3 of 3)

Graphics Controller		Encoder Pixels		Overscan (Percent)		
Total		Active	Total			
H_CLKI	V_LINESI	V_ACTIVEO	H_CLKO	Horizontal	Vertical	Delta
1575	925	260	1554	18.9	9.72	9.18
1250	1065	226	1420	11.25	21.53	-10.2
1250	1056	228	1408	10.49	20.83	-10.3
1250	1068	225	1424	11.5	21.88	-10.3
1250	1047	230	1396	9.72	20.14	-10.4
1250	1059	227	1412	10.74	21.18	-10.4
1250	1038	232	1384	8.94	19.44	-10.5
1250	1050	229	1400	9.98	20.49	-10.5
1250	1062	226	1416	11	21.53	-10.5
1250	1041	231	1388	9.2	19.79	-10.5
1250	1053	228	1404	10.23	20.83	-10.6
1250	1044	230	1392	9.46	20.14	-10.6
1625	930	259	1612	21.82	10.07	11.75
1625	915	263	1586	20.54	8.68	11.85

Table A-26. 1024 x 768 PAL-BDGHI, Character Clock-Based Controller, 8-Pixel Resolution, >4 µs Hblank

Controller Pixels		Encoder Pixels		Overscan (Percent)		
Total		Active	Total			
H_CLKI	V_LINESI	V_ACTIVEO	H_CLKO	Horizontal	Vertical	Delta
1400	975	247	1456	13.44	14.24	-0.8
1400	1050	229	1568	19.62	20.49	-0.86
1440	1000	240	1536	17.95	16.67	1.28
1320	1000	240	1408	10.49	16.67	-6.18

Table A-27. Overscan Values 1024 x 768 PAL-BDGHI, Character Clock-Based Controller, 9-Pixel Resolution

Controller Pixels		Encoder Pixels		Overscan (Percent)		
Total		Active	Total			
H_CLKI	V_LINESI	V_ACTIVEO	H_CLKO	Horizontal	Vertical	Delta
1440	1000	240	1536	17.95	16.67	1.28
1395	1000	240	1488	15.3	16.67	-1.36
1485	1000	240	1584	20.44	16.67	3.77
1350	1025	235	1476	14.61	18.4	-3.79
1350	1050	229	1512	16.65	20.49	-3.84
1350	975	247	1404	10.23	14.24	-4
1350	1000	240	1440	12.48	16.67	-4.19
1305	1000	240	1392	9.46	16.67	-7.21
1575	950	253	1596	21.03	12.15	8.88
1575	925	260	1554	18.9	9.72	9.18

Appendix B Approved Crystal Vendors

Conexant conducted a series of internal tests and used the results to generate this list of approved crystal vendors for the CX25870/871. Manufacturers not appearing in this list may be acceptable, but verification testing on the target PCB with samples is recommended.

Standard Crystal (El Monte, CA)

Phone Number:	(626) 443-2121
FAX Number:	(626) 443-9049
E-mail:	stdxtl@pacbell.net

Part Numbers for 13.500 MHz, Fundamental, 20 pF Load Crystal with an HC49U Type of Package:

Full Height/50 ppm Total Tolerance:	AAL13M500000GXE20A
Half-Height/50 ppm:	AAK13M500000GXE20A
Full Height/25 ppm:	Did Not Qualify

MMD Components (Irvine, CA)

Phone Number:	(949) 753-5888
FAX Number:	(949) 753-5889
E-mail:	info@mmdcomp.com
Internet:	www.mmdcomp.com

Part Numbers for 13.500 MHz, Fundamental, 20 pF Load Crystal with an HC49U Type of Package:

Full Height/50ppm Total Tolerance:	A20BA1-13.500 MHz
Half-Height/50 ppm:	B20BA1-13.500 MHz
Full Height/25 ppm:	MMC-135-13.500 MHz (not tested)
Half Height/25 ppm:	MMC-136-13.500 MHz (not tested)

General Electronics Devices (San Marcos, CA)

Phone Number:	(760) 591-4170
FAX Number:	(760) 591-4164
E-mail:	gedlm@4dcomm.com
Internet:	www.gedlm.com

Part Numbers for 13.500 MHz, Fundamental, 20 pF Load Crystal with an HC49U Type of Package:

Full Height/50 ppm Total Tolerance:	PKHC49-13.500-.020-.005
Half-Height/50 ppm:	PKHC49/-13.500-.020-.005
Full Height/25 ppm:	PKHC49/-13.500-.020-.0025-15R
Half-Height/25 ppm:	PKHC49/-13.500-.020-.0025

Fox Electronics (Fort Myers, FL)

Phone Number:	(941) 693-0099
FAX Number:	(941) 693-1554
E-mail:	sales@foxonline.com
Internet:	www.foxonline.com

Part Numbers for 13.500 MHz, Fundamental, 20 pF Load Crystal with an HC49U Type of Package:

Full-Height/50 ppm Total Tolerance:	HC49U-13.500 /50/0/70/20 pF
Half-Height/50 ppm:	HC49S-13.500/50/0/70/20 pF
Full-Height/25 ppm:	HC49U-13.500 /25/0/70/20 pF
Half-Height/25 ppm:	HC49S-13.500 /25/0/70/20 pF (not tested)

Bomar Crystal Co. (Middlesex, NJ)

Phone Number:	(732) 356-7787
FAX Number:	(732) 356-7362
E-mail:	sales@bomarcrystal.com
Internet:	www.bomarcrystal.com

Part Numbers for 13.500 MHz, Fundamental, 20 pF Load Crystal with an HC49U Type of Package:

Full Height/50 ppm Total Tolerance:	BRC1C14F-13.50000 or (BC1DDA120-13.50000)
Half Height/50 ppm:	ACR-49S012025-13.50000 or (BC14DDA120-13.50000)
Full Height/25 ppm:	BRCIH14F-13.50000 or (BC1AAA120-13.50000
Half Height/25 ppm:	BC14AAA120-13.50000 (not tested)

ILSI America (Reno, NV)

Phone Number:	(775) 851-8880x103 / (888)355-4574
FAX Number:	(775) 851-8882
E-mail:	e-mail@ilsiamerica.com
Internet:	www.ilsiamerica.com

Part Numbers for 13.500 MHz, Fundamental, 20 pF Load Crystal with an HC49U Type of Package:

Full Height/50 ppm Total Tolerance:	HC49U-25/25-13.500-20
Half Height/50 ppm:	HC49US-FB1F20-13.500
Full Height/25 ppm:	Did Not Qualify

Cardinal Components (Wayne, NJ)

Phone Number:	(973) 785-1333
FAX Number:	(973) 785-0053
E-mail:	cardinal@cardinalxtal.com
Internet:	www.cardinalxtal.com

Part Numbers for 13.500 MHz, Fundamental, 20 pF Load Crystal with an HC49U Type of Package:

Full Height/50 ppm Total Tolerance:	C49-A4BRC7-50-13.5D20
Half Height/50 ppm:	CLP-A4BRC7-70-13.5D20
Full Height/25 ppm:	C49-A4B6C4-25-13.5D20
Half Height/25 ppm	CLP-A4B6C4-25-13.5D20

Raltron Electronics Corp. (Miami, FL)

Phone Number:	(305) 593-6033
FAX Number:	(305) 594-3973
E-mail:	Sales@raltron.com
Internet:	www.raltron.com

Part Numbers for 13.500 MHz, Fundamental, 20 pF Load Crystal with an HC49U Type of Package:

Full Height/50 ppm Total Tolerance:	A-13.500-20-RS1
Half Height/50 ppm:	AS-13.500-20-RS1
Full Height/25 ppm:	A-13.500-20-RS1
Half Height/25ppm:	AS-13.500-20-SMD-NV

Valpey-Fisher (Hopkinton, MA)

Phone Number:	(508) 435-6831
FAX Number:	(508) 435-5289
Internet:	www.valpeyfisher.com

Part Numbers for 13.500 MHz, Fundamental, 20 pF Load Crystal with an HC49U Type of Package:

Full Height/50 ppm Total Tolerance:	M490013.500020RSVM
Half Height/50 ppm:	M49K013.50002099VM
Full Height/25 ppm:	M490013.50002099VM

Corning Frequency Control (Mount Holly Springs, PA)

Phone Number:	(717) 486-3411
	FAX Number:(717) 486-5920
E-mail:	sales@ofc.come
Internet:	www.corningfrequency.com

Part Numbers for 13.500 MHz, Fundamental, 20 pF Load Crystal with an HC49U Type of Package:

Full Height/50 ppm Total Tolerance:	TQ RSD 13.5FH50
Half Height/50 ppm:	TQ RSD 13.5LP50
Full Height/25 ppm:	TQ RSD 13.5FH25
Half Height/25 ppm:	TQ RSD 13.5LP25 (not tested)

Appendix C Autoconfiguration Mode Register Values and Details

Table C-1. CX25870/871 Register Values for Autoconfiguration Modes 0–4 (1 of 3)

Autoconfiguration Mode #	0	1	2	3	4
Auto-Config Register (index 0xB8) Hexadecimal Value:	00	01	02	03	04
Purpose of mode:	Desktop	Desktop	Desktop	Desktop	Desktop
Type of Digital Input:	RGB	RGB	RGB	RGB	YCrCb
Active Resolution:	640x480	640x480	800x600	800x600	640x480
Overscan Ratio:	Lower	Standard	Alternate	Lower	Lower
Horizontal Overscan Ratio/Percentage (HOC):	13.79	16.56	21.62	14.53	13.79
Vertical Overscan Ratio/Percentage (VOC):	13.58	16.67	11.52	13.19	13.58
Overscan Percentages Delta (HOC - VOC):	0.21	–0.11	10.10	1.34	0.21
H_CLKI = HTOTAL	784	944	880	960	784
VLINES_I = VTOTAL	600	625	735	750	600
H_BLANKI = Horizontal Blanking Region	126	266	66	140	126
V_BLANKI = Vertical Blanking Region	75	90	86	95	75
Type of Video Output:	NTSC	PAL-BDGHI	NTSC	PAL-BDGHI	NTSC
Frequency of CLK (Hz)	28195793	29500008	38769241	36000000	28195793
Type of Clock:	Pixel or Character	Pixel or Character	Pixel or Character	Pixel or Character	Pixel or Character

Table C-1. CX25870/871 Register Values for Autoconfiguration Modes 0–4 (2 of 3)

Autoconfiguration Mode #	0	1	2	3	4
Register Address	**Register Value**	**Register Value**	**Register Value**	**Register Value**	**Register Value**
0x38	00	00	00	00	00
0x76	00	60	A0	00	00
0x78	80	80	20	20	80
0x7A	84	8A	B6	AA	84
0x7C	96	A6	CE	CA	96
0x7E	60	68	B4	9A	60
0x80	7D	C1	55	0D	7D
0x82	22	2E	20	29	22
0x84	D4	F2	D8	FC	D4
0x86	27	27	39	39	27
0x88	00	00	00	00	00
0x8A	10	B0	70	C0	10
0x8C	7E	0A	42	8C	7E
0x8E	03	0B	03	03	03
0x90	58	71	DF	EE	58
0x92	4B	5A	56	5F	4B
0x94	E0	E0	58	58	E0
0x96	36	36	3A	3A	36
0x98	92	00	CD	66	92
0x9A	54	50	9C	96	54
0x9C	0E	72	14	00	0E
0x9E	88	1C	3B	00	88
0xA0	0C	0D	11	10	0C
0xA2	0A	24	0A	24	0A
0xA4	E5	F0	E5	F0	E5
0xA6	76	58	74	57	76
0xA8	79	81	77	80	79
0xAA	44	49	43	48	44
0xAC	85	8C	85	8C	85
0xAE	00	0C	BA	18	00

Table C-1. CX25870/871 Register Values for Autoconfiguration Modes 0–4 (3 of 3)

Autoconfiguration Mode #	0	1	2	3	4
0xB0	00	8C	E8	28	00
0xB2	80	79	A2	87	80
0xB4	20	26	17	1F	20

NOTE(S):

1. RGB digital input denotes that the CX25870/871 will be configured to receive the RGB default pixel input mode after an autoconfiguration command which is 24-bit, RGB-multiplexed (i.e., IN_MODE[3:0] = 0000). If the desired RGB pixel input mode is NOT 24-bit RGB-multiplexed, the CX25870/871's IN_MODE[3:0] bits must be programmed to the desired RGB pixel input mode immediately before initiating a write to the CONFIG[5:0] bits.
2. YCrCb digital input denotes that the CX25870/871 will be configured to receive YCrCb pixel data after an autoconfiguration command. The CX25870/871's IN_MODE[3:0] bits must be programmed to the desired YCrCb pixel input mode immediately before initiating a write to the CONFIG[5:0] bits.
3. CX25870/871 registers not listed in this table (including IN_MODE[3:0]) do not get reprogrammed as a result of an autoconfiguration command.
4. Pixel or Character signifies that this overscan ratio is acceptable for 8-clock per character graphics controllers or pixel-clock controllers.
5. The CX25870/871 will be in master interface immediately after any autoconfiguration mode EXCEPT Mode 28 and Mode 29.
6. Mode 44 would ideally have 858 clocks per line. However, since 858 is not a multiple of 8, then 880 clocks per line was utilized instead.
7. These autoconfiguration values assume a 13.500 MHz crystal resides between the XTALIN and XTALOUT pins. If the 14318_XTAL bit is set, then these autoconfiguration values will automatically change to reflect the presence of a 14.318 MHz crystal.

Table C-2. CX25870/871 Register Values for Autoconfiguration Modes 5–10 (1 of 2)

Autoconfiguration Mode #	5	6	7	8	9	10
Auto-Config Register (index 0xB8) Hexadecimal Value:	05	06	07	10	11	12
Purpose of Mode:	Desktop	Desktop	Desktop	Boot-Up Screen	Boot-Up Screen	Desktop
Type of Digital Input:	YCrCb	YCrCb	YCrCb	RGB	RGB	RGB
Active Resolution:	640x480	800x600	800x600	640x400	640x400	1024x768
Overscan Ratio:	Standard	Alternate	Lower	Standard	Standard	Standard
Horizontal Overscan Ratio/Percentage (HOC):	16.56	21.62	14.53	17.47	15.12	15.11
Vertical Overscan Ratio/Percentage (VOC):	16.67	11.52	13.19	17.70	13.19	14.81
Overscan Percentages Delta (HOC - VOC):	–0.11	10.10	1.34	–0.23	1.93	0.30
H_CLKI = HTOTAL	944	880	960	936	1160	1176
VLINES_I = VTOTAL	625	735	750	525	500	975
H_BLANKI = Horizontal Blanking Region	266	66	140	259	363	133
V_BLANKI = Vertical Blanking Region	90	86	95	76	64	130
Type of Video Output:	PAL-BDGHI	NTSC	PAL-BDGHI	NTSC	PAL-BDGHI	NTSC
Frequency of CLK (Hz)	29500008	38769241	36000000	29454552	28999992	68727276
Type of Clock:	Pixel or Character	Pixel or Character	Pixel or Character	Pixel or Character	Pixel or Character	Pixel or Character
Register Address	**Register Value**	**Register Value**	**Register Value**	**Register Value**	**Register Value**	**Register Value**
0x38	00	00	00	00	00	20
0x76	60	A0	00	50	40	60
0x78	80	20	20	80	80	00
0x7A	8A	B6	AA	8A	88	D8
0x7C	A6	CE	CA	9C	A2	F2
0x7E	68	B4	9A	6A	64	EE
0x80	C1	55	0D	A9	AF	71
0x82	2E	20	29	27	29	24
0x84	F2	D8	FC	CA	FC	D0
0x86	27	39	39	27	27	4B
0x88	00	00	00	00	00	00
0x8A	B0	70	C0	A8	88	98

Table C-2. CX25870/871 Register Values for Autoconfiguration Modes 5–10 (2 of 2)

Autoconfiguration Mode #	5	6	7	8	9	10
0x8C	0A	42	8C	03	6B	85
0x8E	0B	03	03	0B	0C	04
0x90	71	DF	EE	0D	F4	CF
0x92	5A	56	5F	4C	40	82
0x94	E0	58	58	90	90	00
0x96	36	3A	3A	36	35	3F
0x98	00	CD	66	00	9A	6E
0x9A	50	9C	96	50	49	AB
0x9C	72	14	00	46	8E	A3
0x9E	1C	3B	00	17	E3	8B
0xA0	0D	11	10	0D	0C	1E
0xA2	24	0A	24	0A	24	0A
0xA4	F0	E5	F0	E5	F0	E5
0xA6	58	74	57	75	58	74
0xA8	81	77	80	79	82	77
0xAA	49	43	48	44	49	43
0xAC	8C	85	8C	85	8C	85
0xAE	0C	BA	18	C7	E9	00
0xB0	8C	E8	28	71	5D	00
0xB2	79	A2	87	1C	23	00
0xB4	26	17	1F	1F	27	14

NOTE(S):

1. RGB digital input denotes that the CX25870/871 will be configured to receive the RGB default pixel input mode after an autoconfiguration command, which is 24-bit, RGB-multiplexed (i.e., IN_MODE[3:0] = 0000). If the desired RGB pixel input mode is NOT 24-bit RGB-multiplexed, the CX25870/871's IN_MODE[3:0] bits must be programmed to the desired RGB pixel input mode immediately before initiating a write to the CONFIG[5:0] bits.
2. YCrCb digital input denotes that the CX25870/871 will be configured to receive YCrCb pixel data after an autoconfiguration command. The CX25870/871's IN_MODE[3:0] bits must be programmed to the desired YCrCb pixel input mode immediately before initiating a write to the CONFIG[5:0] bits.
3. CX25870/871 registers not listed in this table (including IN_MODE[3:0]) do not get reprogrammed as a result of an autoconfiguration command.
4. Pixel or Character signifies that this overscan ratio is acceptable for 8-clock per character graphics controllers or pixel-clock controllers.
5. The CX25870/871 will be in master interface immediately after any autoconfiguration mode EXCEPT Mode 28 and Mode 29.
6. Mode 44 would ideally have 858 clocks per line. However, since 858 is not a multiple of 8, then 880 clocks per line was utilized instead.
7. These autoconfiguration values assume a 13.500 MHz crystal resides between the XTALIN and XTALOUT pins. If the 14318_XTAL bit is set, then these autoconfiguration values will automatically change to reflect the presence of a 14.318 MHz crystal.

Table C-3. CX25870/871 Register Values for Autoconfiguration Modes 11–15 (1 of 2)

Autoconfiguration Mode #	11	12	13	14	15
Auto-Config Register (index 0xB8) Hexadecimal Value:	13	14	15	16	17
Purpose of Mode:	Desktop	Game	Game	Desktop	Desktop
Type of Digital Input:	RGB	RGB	RGB	YCrCb	YCrCb
Active Resolution:	1024x768	320x240, Pix_Double Set	320x240, Pix_Double Set	1024x768	1024x768
Overscan Ratio:	Standard	Standard	Standard	Higher	Higher
Horizontal Overscan Ratio/Percentage (HOC):	13.44	13.79	15.84	15.11	13.44
Vertical Overscan Ratio/Percentage (VOC):	14.24	13.58	19.79	14.81	14.24
Overscan Percentages Delta (HOC - VOC):	–0.80	0.21	–3.95	0.30	–0.80
H_CLKI = HTOTAL	1400	1568	1800	1176	1400
VLINES_I = VTOTAL	975	300	325	975	975
H_BLANKI = Horizontal Blanking Region	329	349	385	133	329
V_BLANKI = Vertical Blanking Region	131	37	50	130	131
Type of Video Output:	PAL-BDGHI	NTSC	PAL-BDGHI	NTSC	PAL-BDGHI
Frequency of CLK (Hz)	68249989	28195793	29250000	68727276	68249989
Type of Clock:	Pixel or Character	Pixel or Character	Pixel or Character	Pixel or Character	Pixel or Character
Register Address	**Register Value**	**Register Value**	**Register Value**	**Register Value**	**Register Value**
0x38	20	40	40	20	20
0x76	60	00	50	60	60
0x78	00	80	80	00	00
0x7A	D6	84	8A	D8	D6
0x7C	FE	96	A4	F2	FE
0x7E	E6	60	66	EE	E6
0x80	87	7D	B7	71	87
0x82	2B	22	32	24	2B
0x84	F8	D5	EA	D0	F8
0x86	4B	27	27	4B	4B
0x88	00	00	00	00	00
0x8A	78	20	08	98	78

Table C-3. CX25870/871 Register Values for Autoconfiguration Modes 11–15 (2 of 2)

Autoconfiguration Mode #	11	12	13	14	15
0x8C	49	5D	81	85	49
0x8E	0D	1E	1F	04	0D
0x90	CF	2C	45	CF	CF
0x92	83	25	32	82	83
0x94	00	F0	F0	00	00
0x96	3F	31	31	3F	3F
0x98	EC	49	A4	6E	EC
0x9A	A1	42	40	AB	A1
0x9C	55	0E	00	A3	55
0x9E	55	88	00	8B	55
0xA0	1E	0C	0D	1E	1E
0xA2	24	0A	24	0A	24
0xA4	F0	E5	F0	E5	F0
0xA6	56	76	58	74	56
0xA8	7F	79	81	77	7F
0xAA	47	44	49	43	47
0xAC	8C	85	8C	85	8C
0xAE	57	00	32	00	57
0xB0	F8	00	BB	00	F8
0xB2	F1	80	CD	00	F1
0xB4	18	20	26	14	18

NOTE(S):

1. RGB digital input denotes that the CX25870/871 will be configured to receive the RGB default pixel input mode after an autoconfiguration command, which is 24-bit, RGB-multiplexed (i.e., IN_MODE[3:0] = 0000). If the desired RGB pixel input mode is NOT 24-bit RGB multiplexed, the CX25870/871's IN_MODE[3:0] bits must be programmed to the desired RGB pixel input mode immediately before initiating a write to the CONFIG[5:0] bits.
2. YCrCb digital input denotes that the CX25870/871 will be configured to receive YCrCb pixel data after an autoconfiguration command. The CX25870/871's IN_MODE[3:0] bits must be programmed to the desired YCrCb pixel input mode immediately before initiating a write to the CONFIG[5:0] bits.
3. CX25870/871 registers not listed in this table (including IN_MODE[3:0]) do not get reprogrammed as a result of an autoconfiguration command.
4. Pixel or Character signifies that this overscan ratio is acceptable for 8-clock per character graphics controllers or pixel-clock controllers.
5. The CX25870/871 will be in master interface immediately after any autoconfiguration mode EXCEPT Mode 28 and Mode 29.
6. Mode 44 would ideally have 858 clocks per line. However, since 858 is not a multiple of 8, then 880 clocks per line was utilized instead.
7. These autoconfiguration values assume a 13.500 MHz crystal resides between the XTALIN and XTALOUT pins. If the 14318_XTAL bit is set, then these autoconfiguration values will automatically change to reflect the presence of a 14.318 MHz crystal.

Table C-4. CX25870/871 Register Values for Autoconfiguration Modes 16–21 (1 of 2)

Autoconfiguration Mode #	**16**	**17**	**18**	**19**	**20**	**21**
Auto-Config Register (index 0xB8) Hexadecimal Value:	Reserved	21	22	23	Reserved	25
Purpose of Mode:		Desktop	Desktop	Desktop		Desktop
Type of Digital Input:		RGB	RGB	RGB		YCrCb
Active Resolution:		640x480	800x600	800x600		640x480
Overscan Ratio:		Lower	Lower	Standard		Lower
Horizontal Overscan Ratio/Percentage (HOC):		13.63	13.79	16.42		13.63
Vertical Overscan Ratio/Percentage (VOC):		13.19	13.58	15.97		13.19
Overscan Percentages Delta (HOC - VOC):		0.44	0.21	0.45		0.44
H_CLKI = HTOTAL		950	1176	950		950
VLINES_I = VTOTAL		600	750	775		600
H_BLANKI = Horizontal Blanking Region		271	329	131		271
V_BLANKI = Vertical Blanking Region		76	94	109		76
Type of Video Output:		PAL-BDGHI	NTSC	PAL-BDGHI		PAL-BDGHI
Frequency of CLK (Hz)		28500011	52867138	36812508		28500011
Type of Clock:		Pixel Only	Pixel or Character	Pixel Only		Pixel Only
Register Address		**Register Value**	**Register Value**	**Register Value**		**Register Value**
0x38		00	20	00		00
0x76		20	C0	34		20
0x78		80	20	20		80
0x7A		86	A6	AE		86
0x7C		A0	BA	CE		A0
0x7E		60	98	A0		60
0x80		9D	D9	2B		9D
0x82		29	22	2D		29
0x84		FC	D4	F4		FC
0x86		27	38	39		27
0x88		00	00	00		00
0x8A		B6	98	B6		B6
0x8C		0F	49	83		0F

Table C-4. CX25870/871 Register Values for Autoconfiguration Modes 16–21 (2 of 2)

Autoconfiguration Mode #	16	17	18	19	20	21
0x8E		0B	0C	03		0B
0x90		58	EE	07		58
0x92		4C	5E	6D		4C
0x94		E0	58	58		E0
0x96		36	3A	3B		36
0x98		B8	B7	AE		B8
0x9A		4E	5D	97		4E
0x9C		AB	1B	72		AB
0x9E		AA	7F	5C		AA
0xA0		0C	17	10		0C
0xA2		24	0A	24		24
0xA4		F0	E5	F0		F0
0xA6		58	74	57		58
0xA8		82	78	80		82
0xAA		49	43	48		49
0xAC		8C	85	8C		8C
0xAE		2C	00	01		2C
0xB0		25	00	04		25
0xB2		D3	00	D5		D3
0xB4		27	1A	1E		27

NOTE(S):

1. RGB digital input denotes that the CX25870/871 will be configured to receive the RGB default pixel input mode after an autoconfiguration command, which is 24-bit, RGB-multiplexed (i.e., IN_MODE[3:0] = 0000). If the desired RGB pixel input mode is NOT 24-bit RGB-multiplexed, the CX25870/871's IN_MODE[3:0] bits must be programmed to the desired RGB pixel input mode immediately before initiating a write to the CONFIG[5:0] bits.
2. YCrCb digital input denotes that the CX25870/871 will be configured to receive YCrCb pixel data after an autoconfiguration command. The CX25870/871's IN_MODE[3:0] bits must be programmed to the desired YCrCb pixel input mode immediately before initiating a write to the CONFIG[5:0] bits.
3. CX25870/871 registers not listed in this Table (including IN_MODE[3:0]) do not get reprogrammed as a result of an autoconfiguration command.
4. Pixel or Character signifies that this overscan ratio is acceptable for 8-clock per character graphics controllers or pixel-clock controllers.
5. The CX25870/871 will be in master interface immediately after any autoconfiguration mode EXCEPT Mode 28 and Mode 29.
6. Mode 44 would ideally have 858 clocks per line. However, since 858 is not a multiple of 8, then 880 clocks per line was utilized instead.
7. These autoconfiguration values assume a 13.500 MHz crystal resides between the XTALIN and XTALOUT pins. If the 14318_XTAL bit is set, then these autoconfiguration values will automatically change to reflect the presence of a 14.318 MHz crystal.

Table C-5. CX25870/871 Register Values for Autoconfiguration Modes 22–26 (1 of 2)

Autoconfiguration Mode #	22	23	24	25	26
Auto-Config Register (index 0xB8) Hexadecimal Value:	26	27	30	31	32
Purpose of Mode:	Desktop	Desktop	Boot-Up Screen	Boot-Up Screen	Desktop
Type of Digital Input:	YCrCb	YCrCb	RGB	RGB	RGB
Active Resolution:	800x600	800x600	720x400	720x400	1024x768
Overscan Ratio:	Lower	Standard	Standard	Standard	Lower
Horizontal Overscan Ratio/Percentage (HOC):	13.79	16.42	17.47	15.12	11.97
Vertical Overscan Ratio/Percentage (VOC):	13.58	15.97	17.70	13.19	11.93
Overscan Percentages Delta (HOC - VOC):	0.21	0.45	–0.23	1.93	0.04
H_CLKI = HTOTAL	1176	950	1053	1305	1170
VLINES_I = VTOTAL	750	775	525	500	945
H_BLANKI = Horizontal Blanking Region	329	131	291	411	127
V_BLANKI = Vertical Blanking Region	94	109	76	64	115
Type of Video Output:	NTSC	PAL-BDGHI	NTSC	PAL-BDGHI	NTSC
Frequency of CLK (Hz)	52867138	36812508	33136345	32625000	66272724
Type of Clock:	Pixel or Character	Pixel Only	Pixel or 9-Character only	Pixel or 9-Character only	Pixel Only
Register Address	**Register Value**	**Register Value**	**Register Value**	**Register Value**	**Register Value**
0x38	20	00	00	00	20
0x76	C0	34	3A	28	F8
0x78	20	20	D0	D0	00
0x7A	A6	AE	9C	9A	D0
0x7C	BA	CE	B0	B6	EA
0x7E	98	A0	88	80	E0
0x80	D9	2B	DD	E3	37
0x82	22	2D	27	29	21
0x84	D4	F4	CA	FC	D7
0x86	38	39	28	28	4A
0x88	00	00	00	00	00

Table C-5. CX25870/871 Register Values for Autoconfiguration Modes 22–26 (2 of 2)

Autoconfiguration Mode #	22	23	24	25	26
0x8A	98	B6	1D	19	92
0x8C	49	83	23	9B	7F
0x8E	0C	03	0C	0D	04
0x90	EE	07	0D	F4	B1
0x92	5E	6D	4C	40	73
0x94	58	58	90	90	00
0x96	3A	3B	36	35	3F
0x98	B7	AE	00	9A	9A
0x9A	5D	97	50	49	A9
0x9C	1B	72	2E	00	5D
0x9E	7F	5C	BA	80	74
0xA0	17	10	0E	0E	1D
0xA2	0A	24	0A	24	0A
0xA4	E5	F0	E5	F0	E5
0xA6	74	57	75	57	74
0xA8	78	80	78	80	77
0xAA	43	48	43	48	43
0xAC	85	8C	85	8C	85
0xAE	00	01	95	97	2F
0xB0	00	04	81	1A	A1
0xB2	00	D5	A7	CA	BD
0xB4	1A	1E	1B	22	14

NOTE(S):

1. RGB digital input denotes that the CX25870/871 will be configured to receive the RGB default pixel input mode after an autoconfiguration command, which is 24-bit, RGB-multiplexed (i.e., IN_MODE[3:0] = 0000). If the desired RGB pixel input mode is NOT 24-bit RGB multiplexed, the CX25870/871's IN_MODE[3:0] bits must be programmed to the desired RGB pixel input mode immediately before initiating a write to the CONFIG[5:0] bits.
2. YCrCb digital input denotes that the CX25870/871 will be configured to receive YCrCb pixel data after an autoconfiguration command. The CX25870/871's IN_MODE[3:0] bits must be programmed to the desired YCrCb pixel input mode immediately before initiating a write to the CONFIG[5:0] bits.
3. CX25870/871 registers not listed in this table (including IN_MODE[3:0]) do not get reprogrammed as a result of an autoconfiguration command.
4. Pixel or Character signifies that this overscan ratio is acceptable for 8-clock per character graphics controllers or pixel-clock controllers.
5. The CX25870/871 will be in master interface immediately after any autoconfiguration mode EXCEPT Mode 28 and Mode 29.
6. Mode 44 would ideally have 858 clocks per line. However, since 858 is not a multiple of 8, then 880 clocks per line was utilized instead.
7. These autoconfiguration values assume a 13.500 MHz crystal resides between the XTALIN and XTALOUT pins. If the 14318_XTAL bit is set, then these autoconfiguration values will automatically change to reflect the presence of a 14.318 MHz crystal.

Table C-6. CX25870/871 Register Values for Autoconfiguration Modes 27–30 (1 of 2)

Autoconfiguration Mode #	27	28[5]	29[5]	30
Auto-Config Register (index 0xB8) Hexadecimal Value:	Reserved	34	35	36
Purpose of Mode:		"DVD/CCIR601 Input, Slave interface"	"DVD/CCIR601 Input, Slave interface"	Desktop
Type of Digital Input:		YCrCb	YCrCb	YCrCb
Active Resolution:		720x480	720x576	1024x768
Overscan Ratio:		None (DVD Playback)	None (DVD Playback)	Lower
Horizontal Overscan Ratio/Percentage (HOC):		0.00	0.00	11.97
Vertical Overscan Ratio/Percentage (VOC):		0.00	0.00	11.93
Overscan Percentages Delta (HOC - VOC):		0.00	0.00	0.04
H_CLKI = HTOTAL		858	864	1170
VLINES_I = VTOTAL		262	312	945
H_BLANKI = Horizontal Blanking Region		10	10	127
V_BLANKI = Vertical Blanking Region		19	22	115
Type of Video Output:		NTSC	PAL-BDGHI	NTSC
Frequency of CLK (Hz)		27000000	27000000	66272724
Type of Clock:		Pixel or Character	Pixel or Character	Pixel Only
Register Address		**Register Value**	**Register Value**	**Register Value**
0x38		10	10	20
0x76		B4	C0	F8
0x78		D0	D0	00
0x7A		7E	7E	D0
0x7C		90	98	EA
0x7E		58	54	E0
0x80		03	15	37
0x82		14	17	21
0x84		F0	20	D7
0x86		26	A6	4A
0x88		15	FA	00
0x8A		5A	60	92
0x8C		0A	0A	7F

Table C-6. CX25870/871 Register Values for Autoconfiguration Modes 27–30 (2 of 2)

Autoconfiguration Mode #	27	28[(5)]	29[(5)]	30
0x8E		13	13	04
0x90		06	38	B1
0x92		13	16	73
0x94		F0	20	00
0x96		31	35	3F
0x98		00	00	9A
0x9A		40	40	A9
0x9C		00	00	5D
0x9E		00	00	74
0xA0		8C	8C	1D
0xA2		0A	24	0A
0xA4		E5	F0	E5
0xA6		76	59	74
0xA8		C1	CF	77
0xAA		89	93	43
0xAC		9A	A4	85
0xAE		1F	CB	2F
0xB0		7C	8A	A1
0xB2		F0	09	BD
0xB4		21	2A	14

NOTE(S):

1. RGB digital input denotes that the CX25870/871 will be configured to receive the RGB default pixel input mode after an autoconfiguration command, which is 24-bit, RGB-multiplexed (i.e., IN_MODE[3:0] = 0000). If the desired RGB pixel input mode is NOT 24-bit RGB multiplexed, the CX25870/871's IN_MODE[3:0] bits must be programmed to the desired RGB pixel input mode immediately before initiating a write to the CONFIG[5:0] bits.
2. YCrCb digital input denotes that the CX25870/871 will be configured to receive YCrCb pixel data after an autoconfiguration command. The CX25870/871's IN_MODE[3:0] bits must be programmed to the desired YCrCb pixel input mode immediately before initiating a write to the CONFIG[5:0] bits.
3. CX25870/871 registers not listed in this table (including IN_MODE[3:0]) do not get reprogrammed as a result of an autoconfiguration command.
4. Pixel or Character signifies that this overscan ratio is acceptable for 8-clock per character graphics controllers or pixel-clock controllers.

(5) The CX25870/871 will be in master interface immediately after any autoconfiguration mode EXCEPT Mode 28 and Mode 29.

6. Mode 44 would ideally have 858 clocks per line. However, since 858 is not a multiple of 8, then 880 clocks per line was utilized instead.
7. These autoconfiguration values assume a 13.500 MHz crystal resides between the XTALIN and XTALOUT pins. If the 14318_XTAL bit is set, then these autoconfiguration values will automatically change to reflect the presence of a 14.318 MHz crystal.

Table C-7. CX25870/871 Register Values for Autoconfiguration Modes 31–36 (1 of 2)

Autoconfiguration Mode #	31	32	33	34	35	36
Auto-Config Register (index 0xB8) Hexadecimal Value:	Reserved	40	41	42	43	44
Purpose of Mode:		Desktop	Desktop	Desktop	Desktop	Desktop
Type of Digital Input:		RGB	RGB	RGB	RGB	YCrCb
Active Resolution:		640x480	640x480	800x600	800x600	640x480
Overscan Ratio:		Higher	Higher	Higher	Higher	Higher
Horizontal Overscan Ratio/Percentage (HOC):		18.34	20.27	19.26	19.03	18.34
Vertical Overscan Ratio/Percentage (VOC):		19.34	19.79	19.34	18.40	19.34
Overscan Percentages Delta (HOC - VOC):		–1.00	0.48	–0.08	0.63	–1.00
H_CLKI = HTOTAL		770	950	1170	950	770
VLINES_I = VTOTAL		645	650	805	800	645
H_BLANKI = Horizontal Blanking Region		113	271	323	131	113
V_BLANKI = Vertical Blanking Region		100	104	125	122	100
Type of Video Output:		NTSC	PAL-BDGHI	NTSC	PAL-BDGHI	NTSC
Frequency of CLK (Hz)		29769241	30875015	56454552	37999992	29769241
Type of Clock:		Pixel Only	Pixel Only	Pixel Only	Pixel Only	Pixel Only
Register Address		**Register Value**	**Register Value**	**Register Value**	**Register Value**	**Register Value**
0x38		00	00	20	00	00
0x76		64	B8	58	80	64
0x78		80	80	20	20	80
0x7A		8C	92	B0	B2	8C
0x7C		9E	AC	C8	D4	9E
0x7E		6E	72	AC	AA	6E
0x80		B5	F3	2D	57	B5
0x82		2A	33	2A	31	2A
0x84		C5	E9	C5	EC	C5
0x86		27	27	39	39	27
0x88		00	00	00	00	00
0x8A		02	B6	92	B6	02
0x8C		71	0F	43	83	71

Table C-7. CX25870/871 Register Values for Autoconfiguration Modes 31–36 (2 of 2)

Autoconfiguration Mode #	31	32	33	34	35	36
0x8E		03	0B	0C	03	03
0x90		85	8A	25	20	85
0x92		64	68	7D	7A	64
0x94		E0	E0	58	58	E0
0x96		36	36	3B	3B	36
0x98		50	48	11	F6	50
0x9A		57	51	A1	98	57
0x9C		14	E4	46	8E	14
0x9E		3B	B8	17	E3	3B
0xA0		0D	0D	19	10	0D
0xA2		0A	24	0A	24	0A
0xA4		E5	F0	E5	F0	E5
0xA6		75	58	74	57	75
0xA8		79	81	77	7F	79
0xAA		44	48	43	48	44
0xAC		85	8C	85	8C	85
0xAE		F2	3D	21	E1	F2
0xB0		40	E7	0B	5B	40
0xB2		C8	C2	59	DE	C8
0xB4		1E	24	18	1D	1E

NOTE(S):

1. RGB digital input denotes that the CX25870/871 will be configured to receive the RGB default pixel input mode after an autoconfiguration command, which is 24-bit, RGB-multiplexed (i.e., IN_MODE[3:0] = 0000). If the desired RGB pixel input mode is NOT 24-bit RGB multiplexed, the CX25870/871's IN_MODE[3:0] bits must be programmed to the desired RGB pixel input mode immediately before initiating a write to the CONFIG[5:0] bits.
2. YCrCb digital input' denotes that the CX25870/871 will be configured to receive YCrCb pixel data after an autoconfiguration command. The CX25870/871's IN_MODE[3:0] bits must be programmed to the desired YCrCb pixel input mode immediately before initiating a write to the CONFIG[5:0] bits.
3. CX25870/871 registers not listed in this table (including IN_MODE[3:0]) do not get reprogrammed as a result of an autoconfiguration command.
4. Pixel or Character signifies that this overscan ratio is acceptable for 8-clock per character graphics controllers or pixel-clock controllers.
5. The CX25870/871 will be in master interface immediately after any autoconfiguration mode EXCEPT Mode 28 and Mode 29.
6. Mode 44 would ideally have 858 clocks per line. However, since 858 is not a multiple of 8, then 880 clocks per line was utilized instead.
7. These autoconfiguration values assume a 13.500 MHz crystal resides between the XTALIN and XTALOUT pins. If the 14318_XTAL bit is set, then these autoconfiguration values will automatically change to reflect the presence of a 14.318 MHz crystal.

Table C-8. CX25870/871 Register Values for Autoconfiguration Modes 37–42 (1 of 2)

Autoconfiguration Mode #	37	38	39	40	41	42
Auto-Config Register (index 0xB8) Hexadecimal Value:	45	46	47	50	51	52
Purpose of Mode:	Desktop	Desktop	Desktop	Desktop	Game	Desktop
Type of Digital Input:	YCrCb	YCrCb	YCrCb	RGB	RGB	RGB
Active Resolution:	640x480	800x600	800x600	800x600	320x200, Pix_Double Set	1024x768
Overscan Ratio:	Higher	Higher	Higher	Standard	Standard	Higher
Horizontal Overscan Ratio/Percentage (HOC):	20.27	19.26	19.03	15.59	21.86	18.04
Vertical Overscan Ratio/Percentage (VOC):	19.79	19.34	18.40	15.64	30.90	18.11
Overscan Percentages Delta (HOC - VOC):	0.48	–0.08	0.63	–0.05	–9.04	–0.07
H_CLKI = HTOTAL	950	1170	950	1170	2000	1170
VLINES_I = VTOTAL	650	805	800	770	315	1015
H_BLANKI = Horizontal Blanking Region	271	323	131	323	453	127
V_BLANKI = Vertical Blanking Region	104	125	122	105	65	150
Type of Video Output:	PAL-BDGHI	NTSC	PAL-BDGHI	NTSC	PAL-BDGHI	NTSC
Frequency of CLK (Hz)	30875015	56454552	37999992	54000000	31500000	71181793
Type of Clock:	Pixel Only	Pixel Only	Pixel Only	Pixel Only	Pixel or Character	Pixel Only
Register Address	**Register Value**	**Register Value**	**Register Value**	**Register Value**	**Register Value**	**Register Value**
0x38	00	20	00	20	40	20
0x76	B8	58	80	F0	E0	C8
0x78	80	20	20	20	80	00
0x7A	92	B0	B2	AA	94	E0
0x7C	AC	C8	D4	BE	B0	FC
0x7E	72	AC	AA	9E	78	FA
0x80	F3	2D	57	F3	09	AB
0x82	33	2A	31	25	42	28
0x84	E9	C5	EC	CE	CA	C8
0x86	27	39	39	38	27	4B
0x88	00	00	00	00	00	00
0x8A	B6	92	B6	92	D0	92

Table C-8. CX25870/871 Register Values for Autoconfiguration Modes 37–42 (2 of 2)

Autoconfiguration Mode #	37	38	39	40	41	42
0x8C	0F	43	83	43	C5	7F
0x8E	0B	0C	03	0C	1F	04
0x90	8A	25	20	02	3B	F7
0x92	68	7D	7A	69	41	96
0x94	E0	58	58	58	C8	00
0x96	36	3B	3B	3B	31	3F
0x98	48	11	F6	EF	21	DE
0x9A	51	A1	98	5E	80	AD
0x9C	E4	46	8E	00	00	E8
0x9E	B8	17	E3	00	00	A2
0xA0	0D	19	10	18	0E	1F
0xA2	24	0A	24	0A	24	0A
0xA4	F0	E5	F0	E5	F0	E5
0xA6	58	74	57	74	58	74
0xA8	81	77	7F	78	81	77
0xAA	48	43	48	43	48	43
0xAC	8C	85	8C	85	8C	85
0xAE	3D	21	E1	17	D3	C2
0xB0	E7	0B	5B	5D	2D	72
0xB2	C2	59	DE	74	08	4F
0xB4	24	18	1D	19	24	13

NOTE(S):

1. RGB digital input denotes that the CX25870/871 will be configured to receive the RGB default pixel input mode after an autoconfiguration command, which is 24-bit, RGB-multiplexed (i.e., IN_MODE[3:0] = 0000). If the desired RGB pixel input mode is NOT 24-bit RGB multiplexed, the CX25870/871's IN_MODE[3:0] bits must be programmed to the desired RGB pixel input mode immediately before initiating a write to the CONFIG[5:0] bits.
2. YCrCb digital input denotes that the CX25870/871 will be configured to receive YCrCb pixel data after an autoconfiguration command. The CX25870/871's IN_MODE[3:0] bits must be programmed to the desired YCrCb pixel input mode immediately before initiating a write to the CONFIG[5:0] bits.
3. CX25870/871 registers not listed in this table (including IN_MODE[3:0]) do not get reprogrammed as a result of an autoconfiguration command.
4. Pixel or Character signifies that this overscan ratio is acceptable for 8-clock per character graphics controllers or pixel-clock controllers.
5. The CX25870/871 will be in master interface immediately after any autoconfiguration mode EXCEPT Mode 28 and Mode 29.
6. Mode 44 would ideally have 858 clocks per line. However, since 858 is not a multiple of 8, then 880 clocks per line was utilized instead.
7. These autoconfiguration values assume a 13.500 MHz crystal resides between the XTALIN and XTALOUT pins. If the 14318_XTAL bit is set, then these autoconfiguration values will automatically change to reflect the presence of a 14.318 MHz crystal.

Table C-9. CX25870/871 Register Values for Autoconfiguration Modes 43–47 (1 of 2)

Autoconfiguration Mode #	43	44	45	46	47
Auto-Config Register (index 0xB8) Hexadecimal Value:	53	54	55	56	57
Purpose of Mode:	Desktop	DVD/noninterlaced input	Game	Desktop for Brazil	Desktop for Argentina
Type of Digital Input:	RGB	RGB	RGB	RGB	RGB
Active Resolution:	1024x768	720x480	320x200, Pixel_Double Set	640x480	640x480
Overscan Ratio:	Higher	Very Low (DVD Playback)	Standard	Standard	Standard
Horizontal Overscan Ratio/Percentage (HOC):	16.20	1.24	20.20	13.79	16.56
Vertical Overscan Ratio/Percentage (VOC):	16.67	1.23	21.40	13.58	16.67
Overscan Percentages Delta (HOC - VOC):	–0.47	0.01	–1.20	0.21	–0.11
H_CLKI = HTOTAL	1410	880	1848	784	944
VLINES_I = VTOTAL	1000	525	275	600	625
H_BLANKI = Horizontal Blanking Region	337	140	429	126	266
V_BLANKI = Vertical Blanking Region	147	36	43	75	90
Type of Video Output:	PAL-BDGHI	NTSC	NTSC	PAL-M (Brazil)	PAL-Nc (Argentina)
Frequency of CLK (Hz)	70499989	27692310	30461552	28195793	29500008
Type of Clock:	Pixel Only	Pixel or Character	Pixel or Character	Pixel Only	Pixel Only
Register Address	**Register Value**	**Register Value**	**Register Value**	**Register Value**	**Register Value**
0x38	24	00	40	00	00
0x76	C0	E0	90	00	60
0x78	00	D0	80	80	80
0x7A	DC	82	90	84	8A
0x7C	08	92	A2	A4	A6
0x7E	F0	5C	72	6A	70
0x80	BF	1B	CD	7D	C1
0x82	2F	13	2B	22	2E
0x84	F1	F2	C2	D4	F2
0x86	4B	26	27	27	27
0x88	00	00	00	00	00

Table C-9. CX25870/871 Register Values for Autoconfiguration Modes 43–47 (2 of 2)

Autoconfiguration Mode #	43	44	45	46	47
0x8A	82	70	38	10	B0
0x8C	51	8C	AD	7E	0A
0x8E	0D	03	1F	03	0B
0x90	E8	0D	13	58	71
0x92	93	24	2B	4B	5A
0x94	00	E0	C8	E0	E0
0x96	3F	36	31	36	36
0x98	33	00	C3	92	00
0x9A	A3	50	40	54	50
0x9C	55	C5	D9	0E	72
0x9E	55	4E	89	88	1C
0xA0	1F	0C	0D	0C	0D
0xA2	24	0A	0A	2A	24
0xA4	F0	E5	E5	F0	F0
0xA6	56	76	75	57	57
0xA8	7E	79	78	80	80
0xAA	47	44	44	48	48
0xAC	8C	85	85	8C	8C
0xAE	9B	D1	33	6E	1E
0xB0	29	45	28	DB	C0
0xB2	26	17	15	76	15
0xB4	18	21	1E	20	1F

NOTE(S):

1. RGB digital input denotes that the CX25870/871 will be configured to receive the RGB default pixel input mode after an autoconfiguration command, which is 24-bit, RGB-multiplexed (i.e., IN_MODE[3:0] = 0000). If the desired RGB pixel input mode is NOT 24-bit RGB multiplexed, the CX25870/871's IN_MODE[3:0] bits must be programmed to the desired RGB pixel input mode immediately before initiating a write to the CONFIG[5:0] bits.
2. YCrCb digital input denotes that the CX25870/871 will be configured to receive YCrCb pixel data after an autoconfiguration command. The CX25870/871's IN_MODE[3:0] bits must be programmed to the desired YCrCb pixel input mode immediately before initiating a write to the CONFIG[5:0] bits.
3. CX25870/871 registers not listed in this table (including IN_MODE[3:0]) do not get reprogrammed as a result of an autoconfiguration command.
4. Pixel or Character signifies that this overscan ratio is acceptable for 8-clock per character graphics controllers or pixel-clock controllers.
5. The CX25870/871 will be in master interface immediately after any autoconfiguration mode EXCEPT Mode 28 and Mode 29.
6. Mode 44 would ideally have 858 clocks per line. However, since 858 is not a multiple of 8, then 880 clocks per line was utilized instead.
7. These autoconfiguration values assume a 13.500 MHz crystal resides between the XTALIN and XTALOUT pins. If the 14318_XTAL bit is set, then these autoconfiguration values will automatically change to reflect the presence of a 14.318 MHz crystal.

Appendix D Closed Caption Pseudo Code

```
/* Filename: CC_870_Function.C */
//Causes CX870/871 encoder to encode 2 bytes of data on every
Odd Field=Field 1

#include stdio.h
#include conio.h
<#include other necessary header files>

char   CCdatabyte1, CCdatabyte2;        // Define global vari-
ables

//Any graphics controller/MPEG2 Decoder is assumed to be the I2C
master for this design
//Controller/Data Master sends the CX870/871 the digital CC
bytes necessary for encoding into the Composite Video signal or
Luma signal for S-Video output
//H_CLKO[11:0] value should exist in hex format.  This register
equals bits3-0 //of register 0x86 and bits 7-0 of register 0x76


870_CCEncoding_onField1(int CCdatabyte1, int CCdatabyte2, int
H_CLKO)
{
       int CBITS, CC_PIPE1, CC_ADD_HEX, CCR_START_HEX, CCSEL,
ReadBit;
       int ReadBitArray[8] = {0}; //initializes all element of
ReadBitArray to 0
       float CC_ADD;
       float CCR_START;

       CBITS = 17;
       CC_PIPE1=60;
       CCSEL = 4;          //CCSEL[3:0] = 0100 so CC data is
       encoded on line 21
                        //for 525-line systems and line 23 for
                    625-line systems

                          //Initialization Section
       Write ECCGATE to 1;   //this is bit 3 of register C4 for
the CX870/871
                         //no further closed caption encoding
```

```
                    will be performed
                         //until CCF1B1 & CCF1B2 registers are
                    again written;
              //null will be transmitted on appropriate CC line
              in this case
      Write ECCF1 to 1;   //this is bit 4 of register C4 for
the CX870/871
                          //Enables CC encoding on Field 1
      Write ECCF2 to 0;   //this is bit 5 of register C4 for
the CX870/871
                          //Disables CC encoding for Field 2

      if (625LINE == 0)  //"625LINE" = bit 2 of register 0xA2

                    {            // 525-line format=NTSC is
                          being transmitted
                                 //by CX870/871.  This assumes
                                 PAL-M = another //525 line
                                 format is not allowed



                    [equation] CC_ADD  = ($pow(2,
                    CBITS+5)/1716)*1716.0/H_CLKO;
                                 //equation to determine CC_ADD
                    register for NTSC
                    CC_ADD_hex =
              DEC_TO_HEX_CONVERSION(float CC_ADD);
                                        //assumes
                                        DEC_TO_HEX_CONVERSION
                                        fxn //this should
                                        already exist //some-
                                        where in customer's
                                        code

                    Write CC_ADD(CC_ADD_hex);
                    //CC_ADD[11:0] register is
                                              //comprised of
                                        bits[3:0] of
                                              //register 0xD4
                                              and bits[7:0] of
                                              //CX870/871 reg-
                                              ister 0xD2

                    [equation] CCR_START =
                    H_CLKO*10.003*27/1716 + CC_PIPE1;
                                 //eqn to determine CCR_START
                    register for NTSC
                    CCR_START_hex = DEC_TO_HEX_CONVERSION(float
CCR_START);
                                        //assumes
                                        DEC_TO_HEX_CONVERSION
```

```
                                        fxn //this should
                                        already exist //some-
                                        where in customer's
                                        code

                    Write CCR_START(CCR_START_hex);
                                        //CCR_START[8:0] reg-
                                                   ister is
                                        //comprised of bit[4]
                                                   of regis-
                                                   ter
                                        //0xD4 and bits[7:0]
                                                   of
                                                   CX870/871
                                        //register 0xD0
                    }
else
                    {
            // 625-line format = PAL is being transmitted by
      CX870/871
            //this assumes PAL-M with its' 525 line format is
not allowed

                  [equation] CC_ADD  = ($pow(2,
            CBITS+5)/1716)*1728.0/H_CLKO;
                                        //eqn to determine CC_ADD
                                 register for PAL

                  CC_ADD_hex =
            DEC_TO_HEX_CONVERSION(float CC_ADD);
                       //assumes DEC_TO_HEX_CONVERSION fxn
                       //this should already exist //some-
                       where in customer's code
                  Write CC_ADD(CC_ADD_hex);
            //CC_ADD[11:0] register is
                                              //comprised of
                                        bits[3:0] of
                                              //register 0xD4
                                              and bits[7:0] of
                                              //CX870/871 reg-
                                              ister 0xD2

                  [equation] CCR_START =
            H_CLKO*10.003*27/1728  + CC_PIPE1;
                                 //eqn to determine CCR_START reg-
                                 ister for PAL
                  CCR_START_hex = DEC_TO_HEX_CONVERSION(float
CCR_START);
                       //assumes DEC_TO_HEX_CONVERSION fxn
                       //already exists somewhere in //cus-
                       tomer's code
```

```
                    Write CCR_START(CCR_START_hex);
                                        //CCR_START[8:0] reg-
                                                    ister is
                                        //comprised of bit[4]
                                                    of regis-
                                                    ter
                                        //0xD4 and bits[7:0]
                                                    of
                                                    CX870/871
                                        //register 0xD0
                    }

//Previous Initialization Code only needs to be performed once
by I2C master

            //Closed Caption Encoding Operation
      ReadBitArray[] = CX870ReadbackFxn(ESTATUS = 01);
            //CCSTAT_O will be ReadBitArray[3] after this
function executes
            Or
      ReadBit = ReadCCSTAT_O();
            //CX870/871 has full readback ability of all bits.
            //No longer is it necessary to use legacy Bt869
            method of reading //back status bits

            if (ReadBitArray[3] == 0)
            //alternative IF statement could be 'if (ReadBit
      == 0)'
            {
            //Closed Caption bytes for Field 1 = Odd Field
            have already been //encoded and CCSTAT_O has been
            cleared
            Write CCF1B1(CCdatabyte1); //assumes CCdatabyte1
                                       is in hex format
                                       //already.  Encode new
                                       CC data.
            Write CCF1B2(Ccdatabyte2); //assumes CCdatabyte2
                                       is in hex format
                                       //already.  Encode new
                                       CC data.
//data is not latched until second of the 2 byte data sequence
is written
//this prevents writing of partial data sequence
//for this reason, data must be written in order of Byte 1 and
then Byte 2

//CCSTAT_O will be automatically be set by the CX870/871 until
CC bytes for odd
//field = Field 1 have been encoded
            }
else
```

```
//CCSTAT_O = 1 because CC data has already been written for
Field 1=ODD field //& has not yet been encoded onto analog video
output signal for the odd field
//CCSTAT_O will be reset immediately after the clock run-in
online 284 for NTSC //and line 335 for PAL
return 0;           //CCSTAT_0 = 1 so CC bytes were not encoded
                    on this pass //through the
                    869_CCEncoding_onField1 procedure

return 0;
}
//*****************************************************
Bt869ReadbackFxn(int ESTATUS)
   //Unlike the previous Conexant VGA encoder, the CX870/871
   does have //registers than can be directly read-back.  As a
   result this //Bt869ReadbackFxn should only be used IF the
   software engineer seeks to use //the legacy method of read-
   back found in the Bt868/869.
{
int ReadMONSTAT_CCArray[8] = {0};  //entire array now holds 0

Write ESTATUS;              //ESTATUS[1:0]= {bits 7(MSb) and 6
of register 0xC4}                                          //
ESTATUS[1:0]= 01 from function call.
                          //     00 and 10 possible for ESTATUS
                          as well
                          //     yielding different readback
                    information

Graphics controller issues 0x89 or 0x8B for the CX870/871's
device address;
                          //no subaddress required here since
the CX870/871
                    //only has 1 read register to check with the
                    legacy method
          //This step has the effect of reading a single byte
          //of data from the CX870/871
                          //Table 2-2 Readback bit map says
                          that MONSTAT_A,B,C //bits = bits 7-5
                          //while Bit 4 = CCSTAT_E, bit 3 =
                    CCSTAT_O,
                          // bits 2-0 = FIELD[2:0]
// This ensures the least significant bit of the device
write portion of //the transaction is '1' which indicates
to the encoder that it must //send a byte of data on the
next I2C transaction.  Do not write a //subaddress to the
CX870/871(this is not necessary since the CX870/871
//only appears to have 1 read register with the legacy
method) and then //read the "next" byte after the ACK.

Controller_Transmits_I2C_STOP; //I2C Master must issue an
I2C STOP to
```

```
                                        //finish the Read transac-
                                        tion.  An ACK is //not nec-
                                        essary before closing the
                                        //transaction because the
                                        CX870/871 just //ignores
                                        the ACK anyways
return(ReadMONSTAT_CCArray[]);
}
```

Appendix E HDTV Output Mode

NOTE(S): Warning: Conexant is Pursuing Multiple Patents surrounding this Function

E.1 Introduction

A high definition television system can display images that are better than existing standard definition TV formats such as NTSC, PAL, and SECAM. HDTV pictures are more true-to-life because the resolution of the TV image is much higher, and the colors are more accurate.

Many HDTVs are being equipped with a HD Input port that accepts analog Component YP_BP_R or analog RGB or both.

Recognizing this fact, Conexant has included an HDTV Output Mode within the CX25870/871 which generates the analog Component YP_BP_R or analog RGB outputs necessary for driving an HDTV's HD Input port(s).

While in HDTV mode, the device will output either analog RGB or analog YP_BP_R signals and automatically insert trilevel synchronization pulses (when necessary) and vertical synchronizing broad pulses. The output waveforms and requirements related to the input timing and data on the input side of the CX25870/871 are explained in this section and in the various SMPTE standards governing the HDTV resolutions as listed in Table E-5.

E.2 Allowable Interfaces for HDTV Output Mode

The interface that the CX25870/871 must use in HD Output Mode is either type of video timing slave interface. In this configuration, the HSYNC* and VSYNC* signals must be received as inputs while the BLANK* signal's usage is optional. The encoder cannot transmit the timing signals that initiate the start of a line or the start of a frame in this mode at all. The CX25870/871 can provide a reference clock output—CLKO, or not transmit it, as needed. The EN_OUT bit will control whether or not a CLKO signal is active.

The BLANK* signal will not be required for the HDTV Output Mode interface if the graphics controller outputs the digital codes for the analog blanking level. For analog RGB component video outputs, the digital code for blanking is 00 hex for digital R, G, and B. For offset analog RGB component video outputs, the digital code for blanking is 10 hex for the digital R, G, and B pixel inputs. Finally, for analog Component YP_BP_R video outputs, the digital code for blanking is 10 hex for digital Y and 80 hex for digital Pr and Pb.

If the graphics controller does not possess the ability to output specific digital codes, then a BLANK* signal is a necessary part of this interface.

The allowable interfaces for HDTV Output Mode are illustrated in Figures E-1 and E-2.

Figure E-1. CX25870/871's Pseudo-Master interface with a Graphics Controller as the Timing Master

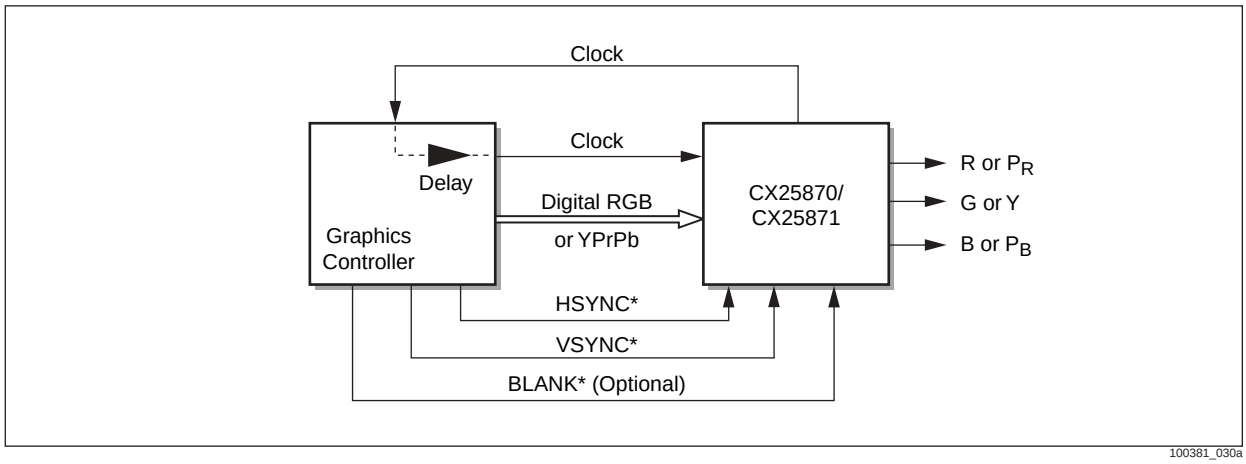

Figure E-2. CX25870/871's Slave interface with a Graphics Controller as the Timing Master

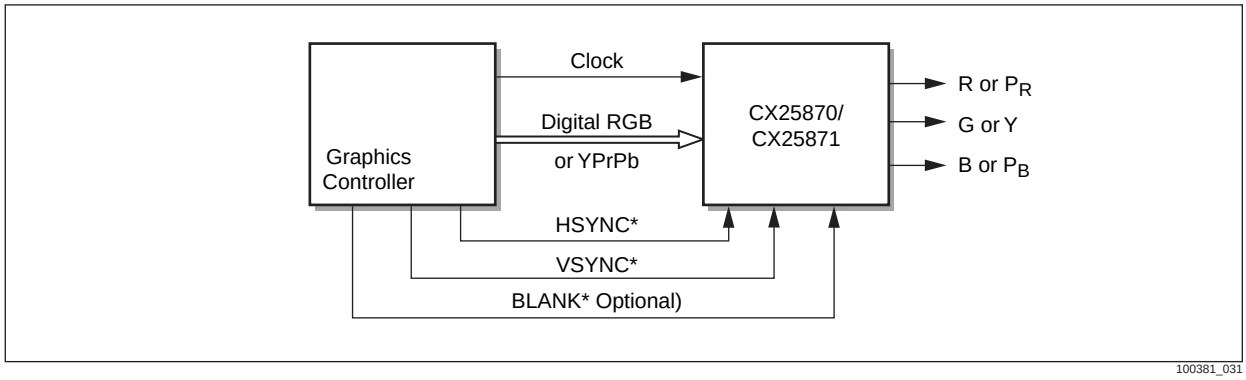

E.3 Interface Bit Functionality in HDTV Output Mode:

When the CX25870 is transmitting High-Definition Outputs, several interface bits behave differently than their operation while broadcasting standard-definition television. These bits and their technical functionality are summarized in the following list:

- The BLANK* pin must be an input regardless of the slave or pseudo-master interface. If the blank function is not enabled with the BLANK* pin, then the BLANK* pin (#38) should be tied high permanently.
- The EN_BLANKO bit has no effect because the BLANK* signal MUST be an input. The same rule holds for VGA(R/G/B) – DAC Output operation.
- The EN_DOT bit has no effect. This bit is related to the standard flicker filter.
- The FLD_MODE[1:0] bit field has no effect. For 1080i or any other HD-related interlaced input, VSYNC*'s leading edge must be received within ±5 clock cycles of the middle of the total line length. For 1080i, this means the VSYNC* leading edge must be received on any clock period between the (2200 / 2) ± 5 clocks = 1095th and 1106th clock pulse.
- The polarity reversing bits (HSYNCI, VSYNCI, and BLANKI) perform the same operations as they do with standard definition outputs.

E.4 Interface Timing between the HDTV Source Device (Master) and CX25870/ CX25871(Timing Slave)

While in HDTV Output Mode, the CX25870/871 encoder should receive interface signals from the MPEG2 decoder or display processor. The interface signals that should be shared between the two devices are the HSYNC*, VSYNC*, BLANK*, CLKI, and Pixel Data lines (P[23:0]). The BLANK* signal is optional. This signal is only necessary if the data master cannot transmit the digital codes representing the BLANK levels to the CX25870/871. To reiterate, the codes for the digital blanking levels of the R, G, B inputs are equal to 00 hex. The digital codes for blanking change to 10 hex for the R, G, and B pixel inputs if conversion to offset analog RGB component video outputs is desired. Finally, the values for digital Y must be 10 hex and for Pr and Pb, digital samples have to equal 80 hex for the BLANK period for Component Video Out (YPBPR). CLKO will only be necessary if Pseudo-Master is used as the chosen interface.

To switch the CX25870/871 encoder into HDTV Output mode, the serial master must program both the OUT_MODE[1:0] bits to 11(DAC Mode) and set the HDTV_EN bit to 1(bit 7 of the HDTV Register). Immediately after these and all other steps listed in Table E-1 and Table E-2, the encoder will be set up to properly generate a set of HDTV Outputs so long as the synchronization, clock, and data signals are transmitted in accordance with the timing diagrams found at the back of Appendix E by the master device.

Table E-1. CX25870 Register Settings for Alternate 24-bit RGB Multiplexed In—HDTV YP_BP_R Out and HDTV RGB Out

ATSC Resolution				
CX25870 Register Address	**1080i**	**720p**	**480p**	**Explanation**
0xD6	0C	0C	0C	OUT_MODE [1:0] field set to 11=DAC Mode to turn on HDTV outputs. Video[0-3] is HDTV Output Mode. HDTV_EN bit must be set as well. Video[0] = HD R or PR, Video[1] = HD G or Y, Video[2] = HD B or PB
0x2E	C3	C2	C5	HDTV_EN set. RGB2YPRPB set. RASTER_SEL[1:0] field adjusted for each ATSC resolution. HD_SYNC_EDGE set for 480p resolution only. For RGB out, RGB2YPRPB bit must be 0 so this register will be 83 / 82 / and 85. For EIA770.3 compliance, disable the trilevel sync on both the P_R and P_B outputs by setting the RPR_SYNC_DIS(bit 5) and BPB_SYNC_DIS(bit 3) bits.
0x32	01	01	00	SETUP_HOLD_ADJ bit is bit 4. CSC_SEL bit set for hi-frequency ATSC resolutions only.
0x3C	80	80	80	MCOMPY stays the same for 480p/720p/1080i in, Y/PR/PB out. or RGB out.
0x3E	45	45	48	MCOMPU must be changed for 480p and 720p/1080i in, Y/PR/PB out. MCOMPU must be changed to 80hex for 480p/720p/1080i in, RGB out.
0x40	51	51	5B	MCOMPV must be changed for 480p and 720p/1080i in, Y/PR/PB out. MCOMPV must be changed to 80hex for 480p/720p/1080i in, RGB out.
0xC4	01	01	01	State of EN_OUT varies according to interface used with master device. Hex value of 01 for this register corresponds to Pseudo-Master without a BLANK* interface.
0xC6	80	80	80	State of EN_BLANKO & EN_DOT varies according to interface used with master device. Hex value of 80 for this register corresponds to Pseudo-Master without a BLANK* interface. IN_MODE[2:0] = 000 - defines input format as 24-bit RGB multiplexed.
0xCE	24	24	24	Adjust this register as necessary to route Y/PR/PB out from the CX25870's 4 DACs OUT_MUXD[1:0]= 00 =Video[0] = PR = R {Disabled from DACDISD=1} OUT_MUXC[1:0]= 10 =Video[2] = PB = B OUT_MUXB[1:0]= 01 =Video[1] = Y = G OUT_MUXA[1:0]= 00 =Video[0] = PR = R
0xA0	21	21*	8C	PLL_INT[5:0] = 21 for 720p @ 74.25 MHz *PLL_INT[5:0] = 20 for 720p @ 74.16 MHz
0x9E	00	00**	00	PLL_FRACT[15:8] = 00 for 720p @ 74.25 MHz **PLL_FRACT[15:8] = F5 for 720p @ 74.16 MHz
0x9C	00	00**	00	PLL_FRACT[7:0] = 00 for 720p @ 74.25 MHz **PLL_FRACT[7:0] = C3 for 720p @ 74.16 MHz
0xBA	28	28	28	SLAVER set. Interface is slave timing (pseudo-master or slave) HSYNC*/VSYNC* sent to CX25870. DACD disabled. PR/Y/PB transmitted from DACA/DACB/DACC
WAIT state = 75 ms.	Yes	Yes	Yes	Ready encoder for timing reset operation. 75 ms = many factors of safety.
0x6C	C6	C6	C6	Set TIMING_RESET bit. Cleared automatically.
(*) = If graphics controller is character based with 8 pixel clocks/character, PLL_INT should be modified to generate a 74.16000 MHz. CLKO and CLKI frequency.				
(**) = If graphics controller is character based with 8 pixel clocks/character, PLL_FRACT should be modified to generate a 74.16000 MHz. CLKO and CLKI frequency.				

Table E-2. CX25870 Register Settings for 24-bit YPrPb Multiplexed In—HDTV YP_BP_R Out

ATSC Resolution				
CX25870 Register Address	**1080i**	**720p**	**480p**	**Explanation**
0xD6	0C	0C	0C	OUT_MODE [1:0] field set to 11=DAC Mode to turn on HDTV Outputs. Video[0-3] is HDTV Output Mode. HDTV_EN bit must be set as well. Video[0] = HD PR, Video[1] = HD Y, Video[2] = HD PB
0x2E	AB***	AA***	AD***	HDTV_EN set. RGB2YPRPB off. RASTER_SEL[1:0] field adjusted for each ATSC resolution. HD_SYNC_EDGE set for 480p resolution only. For EIA770.3 compliance, the trilevel sync has been disabled on both the PR and PB outputs by setting the RPR_SYNC_DIS(bit 5) and BPB_SYNC_DIS(bit 3) bits.
0x32	09	09	08	DRVS[1:0] = 00 for 3.3V interfacing. Should be adjusted to nonzero value for low voltage interface. IN_MODE[3] = 1 = input format is Alternate 24bit YP_RP_B multiplexed SETUP_HOLD_ADJ bit is bit 4. CSC_SEL bit set for hi-frequency ATSC resolutions only.
0x3C	80	80	80	MCOMPY stays the same for 480p/720p/1080i in, Y/PR/PB out.
0x3E	80	80	80	MCOMPU stays the same for 480p/720p/1080i in, Y/PR/PB out.
0x40	80	80	80	MCOMPV stays the same for 480p/720p/1080i in, Y/PR/PB out.
0xC4	01	01	01	State of EN_OUT varies according to interface used with master device. Hex value of 01 for this register corresponds to Pseudo-Master without a BLANK* interface.
0xC6	84	84	84	State of EN_BLANKO & EN_DOT varies according to interface used with master device. Hex value of 80 for this register corresponds to Pseudo-Master without a BLANK* interface. IN_MODE[2:0] = [1]100 - input format is Alternate 24bit YP_RP_B multiplexed
0xCE	24	24	24	Adjust this register as necessary to route Y PR PB out from the CX25870's 4 DACs OUT_MUXD[1:0]= 00 =Video[0] = PR {Disabled from DACDISD=1} OUT_MUXC[1:0]= 10 =Video[2] = PB OUT_MUXB[1:0]= 01 =Video[1] = Y OUT_MUXA[1:0]= 00 =Video[0] = PR
0xA0	21	21*	8C	PLL_INT[5:0] = 21 for 720p @ 74.25 MHz *PLL_INT[5:0] = 20 for 720p @ 74.16 MHz
0x9E	00	00**	00	PLL_FRACT[15:8] = 00 for 720p @ 74.25 MHz **PLL_FRACT[15:8] = F5 for 720p @ 74.16 MHz
0x9C	00	00**	00	PLL_FRACT[7:0] = 00 for 720p @ 74.25 MHz **PLL_FRACT[7:0] = C3 for 720p @ 74.16 MHz
0xBA	28	28	28	SLAVER set. Interface is slave timing (pseudo-master or slave) HSYNC* & VSYNC* sent to CX25870. DACD disabled. PR transmitted from DACA, Y transmitted from DACB, and PB transmitted from DACC
WAIT state = 75 ms	Yes	Yes	Yes	Ready encoder for timing reset operation. 75 ms = many factors of safety.
0x6C	C6	C6	C6	Set TIMING_RESET bit. Cleared automatically.

NOTE(S):
(*) = If graphics controller is character based with 8 pixel clocks/character, PLL_INT should be modified to generate a 74.16000 MHz CLKO and CLKI frequency.
(**) = If graphics controller is character based with 8 pixel clocks/character, PLL_FRACT should be modified to generate a 74.16000 MHz CLKO and CLKI frequency.
(***) = Conversion from YPrpb digital input to HDTV RGB Out not possible with CX25870/871.

In the default format, the HSYNC* signal is active low and must always be received as an input in HDTV Output Mode. Its function is to allow the graphics controller to tell the encoder when the start of a line occurs. Check the timing diagrams that appear later in this section for proper HSYNC* timing.

In the default format, the VSYNC* signal is active low and must always be received as an input in HDTV Output Mode. Its function is to allow the graphics controller to tell the encoder when the start of a frame occurs. Check the timing diagrams that appear later in this section for proper VSYNC* timing.

By default, the clock output signal will be transmitted via the CLKO port. Therefore, the CX25870/871 will be in Pseudo-Master interface. To switch into Slave interface, the user must reset the EN_OUT bit to turn off CLKO.

Table E-2 summarizes the default Pseudo-Master HDTV interface.

Table E-3. Default State of CX25870/871 Immediately After Switch into HDTV Output Mode

Input Signals			CLKO	State of the CX25870/871
BLANK*	**HSYNC***	**VSYNC***		**State of Encoder in HDTV Output Mode**
Optional	H	H	Active	Digital RGB—Analog HD RGB or Digital YP_RP_B—Analog HD YP_BP_R DAC Conversion
Optional	L	H	Active	Start of a New Line
Optional	L	L	Active	Start of a New Frame

The timing diagrams found at the end of this Appendix (Figures E-5 through E-9) must be replicated with actual timing by the MPEG2 Decoder or Display Processor for the encoder to provide correct HDTV analog RGB or analog YP_BP_R component video outputs.

E.5 Automatic Trilevel Sync Generation

The CX25870/871 will automatically generate an analog synchronization pulse with three distinct voltage levels for every leading edge it receives at its HSYNC* input (so long as RASTER_SEL[1:0] = 10 or 11). This trilevel pulse will be comprised of a –300 mV LOWSYNC level, a +300 mV HIGHSYNC level, and a 0 mV BLANKING level offset by +350 mVDC because the CX25870/871 cannot output negative voltages. Figure 3, "Analog and Digital Timing Relationships", of the SMPTE-274M specification, shows a very detailed diagram of the trilevel sync and start of a line in 1080i mode. Figure 11 of this same SMPTE standard illustrates the horizontal timing and trilevel sync in more detail.

For those formats which require trilevel syncs, such as 1080i and 720p, the timing for certain portions of the synchronization pulses differ slightly. For instance, the amount of time each pulse is at a voltage level of –300 mV (LOWSYNC) is not the same from one resolution (ATSC format) to another. For 1080i, the time for the LOWSYNC level each line is 44T(44 clock periods = 44*(1/74.25 MHz)= 592.5 ns For 720p, the same interval is 40T periods long which equates to 40 * (1/74.25 MHz)= 538.7 ns.

In 480p resolution, in accordance with the SMPTE-293M specification, the CX25870/871 outputs only bilevel analog synchronization pulses.

As Figure 3 "Analog and Digital Timing Relationships" of the SMPTE-274M and -296M standards show, the period of time for the HIGHSYNC also varies when moving from 1080i mode to 720p mode. In this first case, the HIGHSYNC output level will be active for 44 clock periods. For 1080i, 44 clock periods * (1/74.25 MHz) = 592.6 ns.

In 720p resolution, the HIGHSYNC output signal will be active for 40 clock periods per output line. For 720p, 40 clock periods * (1/74.25 MHz)= 538.7ns, so the HIGHSYNC signal will only be active for 538.7 ns per output line.

Due to these discrepancies, the data master will need to program the CX25870/871's RASTER_SEL[1:0] bits properly so the encoder knows exactly which ATSC format it is going to encode. The encoder will then take care of outputting the proper analog voltage levels (see Figures E-5 through E-9) for the appropriate amounts of time depending on the resolution.

The table below summarizes the different permutations of the RASTER_SEL[1:0] bits and the resolutions/modes supported with each option.

Table E-4. CX25870/CX25871 RASTER_SEL[1:0] Bit Functionality

RASTER_SEL [1]	RASTER_SEL [0]	HDTV/ATSC Mode	LOWSYNC period (ns)	HIGHSYNC period (ns)
1	1	1080i = SMPTE 274M (1)	44 clock periods = 592.6 ns	44 clock periods = 592.6 ns
1	0	720p = SMPTE 296M(2)	40 clock periods = 538.7ns	40 clock periods = 538.7ns
0	1	480p = SMPTE 293M	63 clock periods = 2.36 μs.	No HIGHSYNC period
0	0	Trilevel sync periods dictated by HSYNC*&VSYNC* input levels	LOWSYNC period = width of VSYNC* input	HIGHSYNC period = width of HSYNC* input

NOTE(S):

(1) The CX25870/871 can also be programmed for EIA-770.3 1080i format compliance. To do so, set RASTER_SEL[1:0] = 11 and set the BPB_SYNC_DIS and RPR_SYNC_DIS bits to 1 to disable the trilevel sync on the PB and PR signals.

(2) The CX25870/871 can also be programmed for EIA-770.3 720p format compliance. To do so, set RASTER_SEL[1:0] = 10 and set the BPB_SYNC_DIS and RPR_SYNC_DIS bits to 1 to disable the trilevel sync on the PB and PR signals.

(3) To obtain any of these SMPTE specifications, visit Global Engineering Documents at: http://global.ihs.com/

The inserted syncs will adhere to Figure 3 and the analog and digital timing relationships found in the various SMPTE specifications. All lines of the First and Second Fields of an Interlaced System will contain the trilevel syncs. This includes lines #1-5 and #564-567 of the 1080i format. Line 563 is an extraordinary case and the reader should defer to the SMPTE 274M specification for more details on this topic.

An illustration of the typical trilevel sync output from the CX25870/871is shown on the next page. Note that the CX25870/871 cannot transmit negative voltages. As a result, the video output is offset by +350mV to accommodate the negative sync levels listed in the governing specifications.

Figure E-3. 1080i and 720p Trilevel Sync provided by CX25870/871

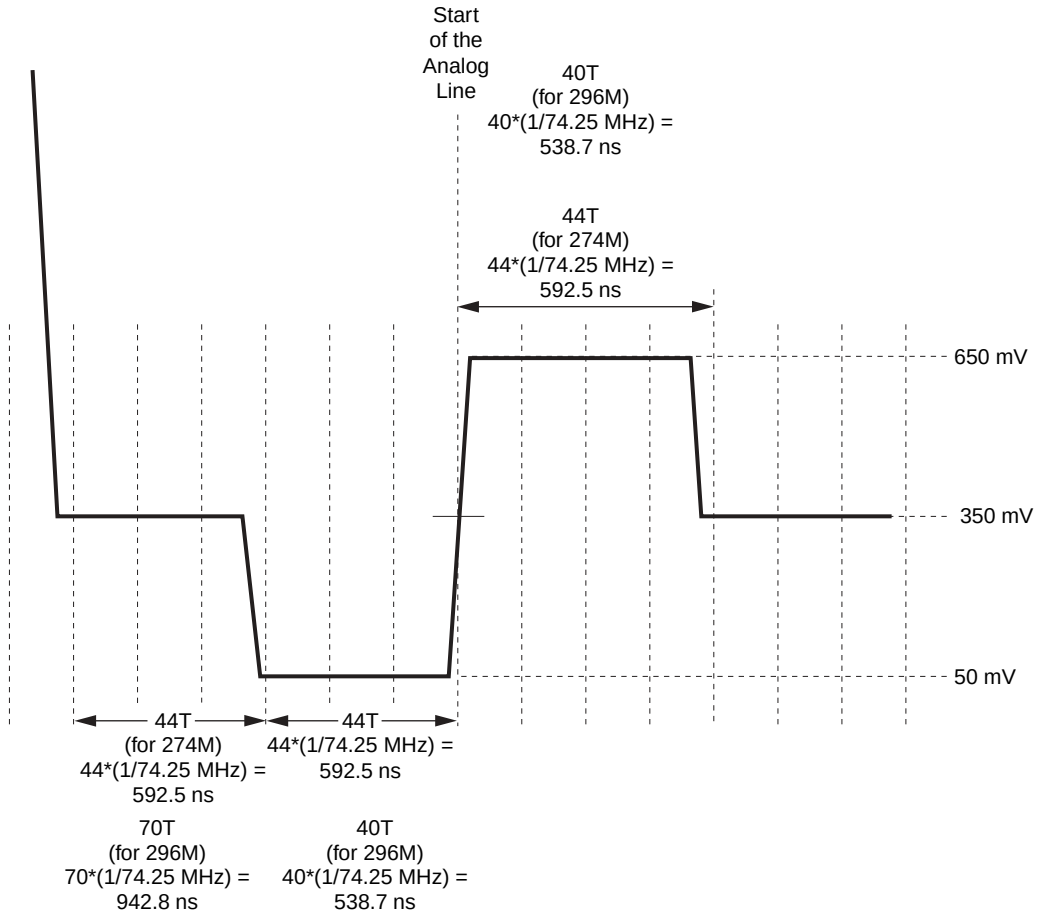

NOTE(S):

1. Trilevel Sync applies to Y P_B, P_R output signals as well as HD RGB output signals.
2. 720p Trilevel Sync timing differences are listed in RED.

100381_032

E.6 Allowable Resolutions

Table E-5 summarizes the most popular HD resolutions or ATSC video formats supported by the CX25870/871.

Table E-5. CX25870/CX25871 HDTV Supported Formats

Active Format (H x V)	Governing Standards	Input Data Format (can be muxed or nonmuxed)	OutputAspect Ratio	Frame Rate
1920x1080 = 1080i (contains trilevel syncs)	SMPTE-274M & EIA-770.3	15, 16, or 24 bit RGB or 16 or 24 bit Digital YP_BP_R	16 : 9	30 Hz. interlaced
1280x720 = 720p (contains trilevel syncs)	SMPTE-296M & EIA-770.3	15, 16, or 24 bit RGB or 16 or 24 bit Digital YP_BP_R	16 : 9	60 Hz. noninterlaced
720x480 = 480p (does not contain trilevel syncs)	SMPTE-293M	15, 16, or 24 bit RGB or 16 or 24 bit Digital YP_BP_R	16 : 9	60 Hz. noninterlaced

Conceivably, any HD format with a clock less than or equal to 80 MHz can be displayed with the RASTER_SEL[1:0] = 00 option. This flexibility allows the CX25870/871 to receive resolutions not yet standardized. All HDTV Output Mode resolutions will generate the new WSS wide screen format that provides an aspect ratio of 16:9 yielding a movie-theatre like viewing experience.

When the encoder is in HDTV Output Mode, the internal FIFO and flicker filter blocks are bypassed. Therefore, the $Y/P_B/P_R$ and R/G/B video outputs do not have any flickering filtering nor any overscan compensation applied to them. For 480p, 720p, and other progressive input formats, the lack of flicker filtering causes no degradation whatsoever in the video output quality as compared to the digital input. For 1080i and other interlaced input formats, the lack of flicker filtering sets off the appearance of minor flickering in screen regions with small vertical dimensions.

The lack of overscan compensation in HDTV Output Mode results in the outer horizontal and vertical edges of the active image to appear behind the bezel of the television. This annoyance can be overcome by the insertion of a solid colored border around the active image itself by the data master in the digital domain.

E.7 720p Support with Character Clock Based Data Masters

Character clock based graphics controllers with 8 pixel clocks per character will experience difficulty supporting the 720p ATSC resolution. The reason for this is because the total line length (i.e., Samples per Total Line = S/TL) of 1650 pixels for 720P is not evenly divisible by 8. Thus, each line is comprised of an amount of characters that contains a non-zero fraction (206 + ¼ of a character or 206.25 total characters). To get around this shortcoming, the graphics controller must set its total line length to 1648 (HTOTAL) pixels and change the pixel clock frequency to 74.1600 MHz. instead of the values of 1650 pixels and 74.2500 MHz. respectively as specified in the SMPTE-296M standard that governs the 720p resolution.

All of the analog timing will then fall within the guidelines listed in the SMPTE-296M specification and the CX25870 will generate the desired analog representation of the 720p ATSC resolution.

Internal analysis of different portions of the 720p R/G/B and $Y/P_B/P_R$ waveforms has revealed that this approach is valid. All of the analog timing falls within the tolerances of the SMPTE-296M standard including the length of the broad pulse. In terms of clock periods, using the 74.1600 MHz. clock yields a broad pulse length in time of 20.766 µs in duration. Using a 74.2500 MHz. clock yields a broad pulse of 20.741 µs in duration. This tiny deviation will not cause a problem for any High Definition television set.

To change the pixel clock frequency the encoder transmits and expects in return, the CX25870's PLL_INT and PLL_FRACT registers must be modified. For 720p support with Character Clock Based Data Masters, change the PLL_INT[5:0] bit field from 21 hex (for 74.25 MHz.) to 20hex for 74.1600 MHz. operation. Furthermore, reduce the 2-byte wide PLL_FRACT[15:0] from 0000 hex (for 74.25 MHz.) to F5C3 hex for 74.1600 MHz. operation. This reduction in the PLL_INT and PLL_FRACT registers will ensure the encoder transmits the modified 720p clock of 74.1600 MHz. to the data master through CLKO and expects to receive data at this frequency coming back (via CLKI). This step must be done to render 720p via Character Clock Based Data Masters with the CX25870. Programming the data master's HTOTAL register to 1648 is vital as well. Modifying the CX25870's H_CLKI register to 1648 decimal is optional because this register will have no effect while the encoder is outputting HDTV.

In summary, for data masters which are character clock based with 8 and 9 pixel clocks per character and wish to support the 720p resolution, slow down the pixel input clock frequency (CLKI) by 90 kHz. to 74.1600 MHz and compensate by reducing HTOTAL by 2 pixels per line to 1648 pixels.

E.8 Automatic Insertion of Broad Pulses

In HD televisions, a frame shall begin with five vertical sync lines each containing a broad pulse. Broad pulses are the HD equivalent to the vertical synchronizing Serration and Equalization pulses used with present-day analog TVs. In response to the correct timing provided through the VSYNC* input which triggers the start of a new frame, the CX25870/871 will automatically insert broad pulses and trilevel syncs on the first 5 lines of the First Field(#1-#5) and the first 5 lines in the Second Field (563-568 for 1080i format). These broad pulses will adhere to the timing and voltage amplitudes found in various SMPTE specifications.

Figure E-6 illustrates the proper interface timing between the HDTV Source Device (master) and CX25870/ CX25871(timing slave) during lines that include a BROAD PULSE in 1080i format. Figure E-8 shows the relationship between the digital input signals and HDTV output for lines that include a broad pulse in 720p format.

E.9 HDTV Output Mode Register and Bit Definitions

Table E-6. Register Bitmap for HDTV-Specific Registers

8-Bit Address	D7	D6	D5	D4	D3	D2	D1	D0
2E	HDTV_EN*	RGB2YPRPB*	RPR_SYNC _DIS*	GY_SYNC_ DIS*	BPB_SYNC_ DIS*	HD_SYNC_ EDGE*	RASTER_SEL[1:0]*	
32	AUTO_CHK	DRVS[1:0]		SETUP_ HOLD_ADJ	IN_MODE[3]	DATDLY_RE	OFFSET_RG B*	CSC_ SEL*
NOTE(S): * = HDTV-specific bits								

Table E-7. CX25870/871 Registers 0x2E & 0x32–HDTV Output Mode Bit Descriptions (1 of 2)

Bit/Register Names	Bit/Register Definition
HDTV_EN	Enable HDTV Output Mode. OUT_MODE[1:0] register bits must be set to 11(VGA Mode). 0 = Enables VGA mode. DACs will output analog R, G, B with standard bilevel(–40 IRE) analog syncs. (DEFAULT) 1 = Enables HDTV Output mode. DACs will output HDTV compatible R/G/B or component video (Y/PR/PB) outputs. Trilevel syncs and vertical synchronizing/broad pulses will be inserted automatically if RASTER_SEL[1:0] = nonzero. Note: EN_SCART bit must be 0 for HDTV Output Mode to be functional.
RGB2YPRPB	HDTV output switching bit. This bit is only effective when HDTV_EN = 1 and IN_MODE[3:0] = an RGB Input format. 0 = Digital RGB Input to Analog HDTV RGB Output (DEFAULT) 1 = Digital RGB Input to Analog HDTV YP_RP_B Output
RPR_SYNC_DIS	0 = Enables trilevel sync on Red or PR output. (DEFAULT) 1 = Disables trilevel sync on Red or PR output. This bit will have to be set manually for EIA-770.3 compliance.
GY_SYNC_DIS	0 = Enables trilevel sync on Green or Y output. (DEFAULT) 1 = Disables trilevel sync on Green or Y output
BPB_SYNC_DIS	0 = Enables trilevel sync on Blue or PB output. (DEFAULT) 1 = Disables trilevel sync on Blue or PB output. This bit will have to be set manually for EIA-770.3 compliance.
HD_SYNC_EDGE	This bit is only effective when HDTV_EN = 1 and RASTER_SEL is nonzero. 0 = Trilevel sync edges transition time is equal to 4 input clocks. (DEFAULT) 1 = Trilevel sync edges transition time is equal to 2 input clocks.
RASTER_SEL[1:0]	This bit is only effective when HDTV_EN = 1. 00 = Device does not generate trilevel sync automatically in HDTV output mode. Trilevel sync periods dictated by active HSYNC* input signal (as HIGHSYNC) and active VSYNC* input signal (as LOWSYNC). (DEFAULT) 01 = Bilevel sync generation for 480P format 10 = Trilevel sync generation for 720P format 11 = Trilevel sync generation for 1080i format

Table E-7. CX25870/871 Registers 0x2E & 0x32–HDTV Output Mode Bit Descriptions (2 of 2)

OFFSET_RGB	0 = Standard RGB graphic digital input. Range is 0–255 decimal (DEFAULT) 1 = HDTV OFFSET RGB graphic digital input. Range is 16–235 decimal.
CSC_SEL	0 = Standard color space conversion for RGB to Y (R-Y) (B-Y) based on Y = 0.299R + 0.587G + 0.114B (DEFAULT) 1 = HDTV color space conversion for RGB to Y (R-Y) (B-Y) based on Y = 0.2126R + 0.7152G + 0.0722B

E.10 Color Space Conversion Functionality to Support Analog RGB or YP_BP_R Component Video Outputs

The CX25870/871 has the ability to receive a digital RGB stream prevalent in graphics controllers or chipsets with integrated graphics with a width of 15/16/or 24-bits per pixel and transform it to a set of HDTV-compatible analog YP_BP_R component video outputs.

The option of not converting the digital RGB stream to analog YP_BP_R is available as well. In this case, the CX25870/871 would output a set of HDTV-compatible analog RGB component video outputs based on the same 15/16/or 24-bits per pixel RGB digital input.

The CX25870/871 can support the conversion from the HDTV color-difference digital YP_BP_R color space directly to analog YP_BP_R component video outputs seamlessly. No color space conversion nor register reprogramming is necessary for this case.

However, the HDTV color-difference digital YP_BP_R color space is slightly different from the standard digital 4:2:2 YCrCb (i.e., CCIR601) stream found within consumer applications such as set-top boxes. As a result, the CX25870/871 must be reprogrammed to new register values not found in Table E-1 to accommodate for the differences in the two formats. For this complete register set, contact your local Conexant Field Applications Engineer. Once obtained, program up the CX25870 as specified and it will provide analog YP_BP_R video outputs based on standard 4:2:2 YCrCb MPEG2 input data. The resulting outputs will be of high quality and viewable on SMPTE274M and SMPTE 296M standard HDTVs.

For design simplicity, Conexant recommends the data master just send digital YP_RP_B for consumer applications instead of YCrCb. For reference these matrix equations for conversion into digital Pb and digital Pr are listed below:

$$Pb = \{0.5 / (1 - 0.0722)\} (B' - Y')$$
$$\text{Where } (B' - Y') = Cb$$

$$Pr = \{0.5 / (1 - 0.2126)\} (R' - Y')$$
$$\text{Where } (R' - Y') = Cr$$

NOTE(S):

1. The CX25870/871's MCOMPU register must contain a value of 45 hex prior to performing a color space conversion from digital RGB to analog YPBPR. The CX25870/871's MCOMPV register must contain a value of 51 hex prior to performing a color space conversion from digital RGB to analog YPBPR.
2. Digital Pb and Digital Pr are expressed as P'B and P'R in the SMPTE specifications.

Finally, the CX25870/871 cannot provide analog RGB video outputs from either color-difference digital YPrPb or 4:2:2 YCrCb MPEG2 input data. The encoder will not perform this color space conversion whatsoever. For analog RGB component HD out, a digital RGB input stream must be sent by the data master.

E.11 Recommended Output Filters for HDTV & SDTV

According to the SMPTE274M standard that governs the 1080i ATSC resolution, “the Y signal for Component HD video output shall have a bandwidth nominally of 30 MHz. In addition, the P_R and P_B signals shall have the same bandwidth as that of the associated Y signal at the analog originating equipment.” Other filter criteria found in the various SMPTE standards include the amplitude limit for ripple tolerance in the passband of +/- 0.5 dB relative to insertion loss at 100 kHz. For Group-Delay, SMPTE states that the ”group delay in the filters (should be) sufficiently tight to produce good performance while allowing the practical implementation of the filters themselves" (from SMPTE 274M and SMPTE293M(720p) standards).

As result of these criteria, during High Definition Output Mode, each CX25870 DAC output requires a low pass filter with a passband from DC to 30 MHz. while adhering to the aforementioned group delay and passband ripple tolerances. Unfortunately, the filtering requirements for standard definition television are quite different in several areas than filtering for HDTV. The most important difference is that standard definition standards such as NTSC, PAL, and SECAM require a much lower 8 MHz. passband starting at DC than HDTV.

This bandwidth difference coupled with the differing voltage amplitudes of the signals themselves forced Conexant to design a new low pass filter with a wider passband to accommodate the HD outputs. After extensive testing and cost/benefit trade-offs, the company recommends that any customer using the encoder for both its standard definition and high definition capabilities design-in the low pass filter found in Figure E-4. This filter has been shown to exhibit many of the desired roll off, ripple, and passband characteristics defined in the aforementioned SMPTE standards.

Figure E-4. Recommended Low Pass Filter Configuration for each CX25870 DAC for Generation of High Definition and NTSC/PAL/SECAM TV Outputs

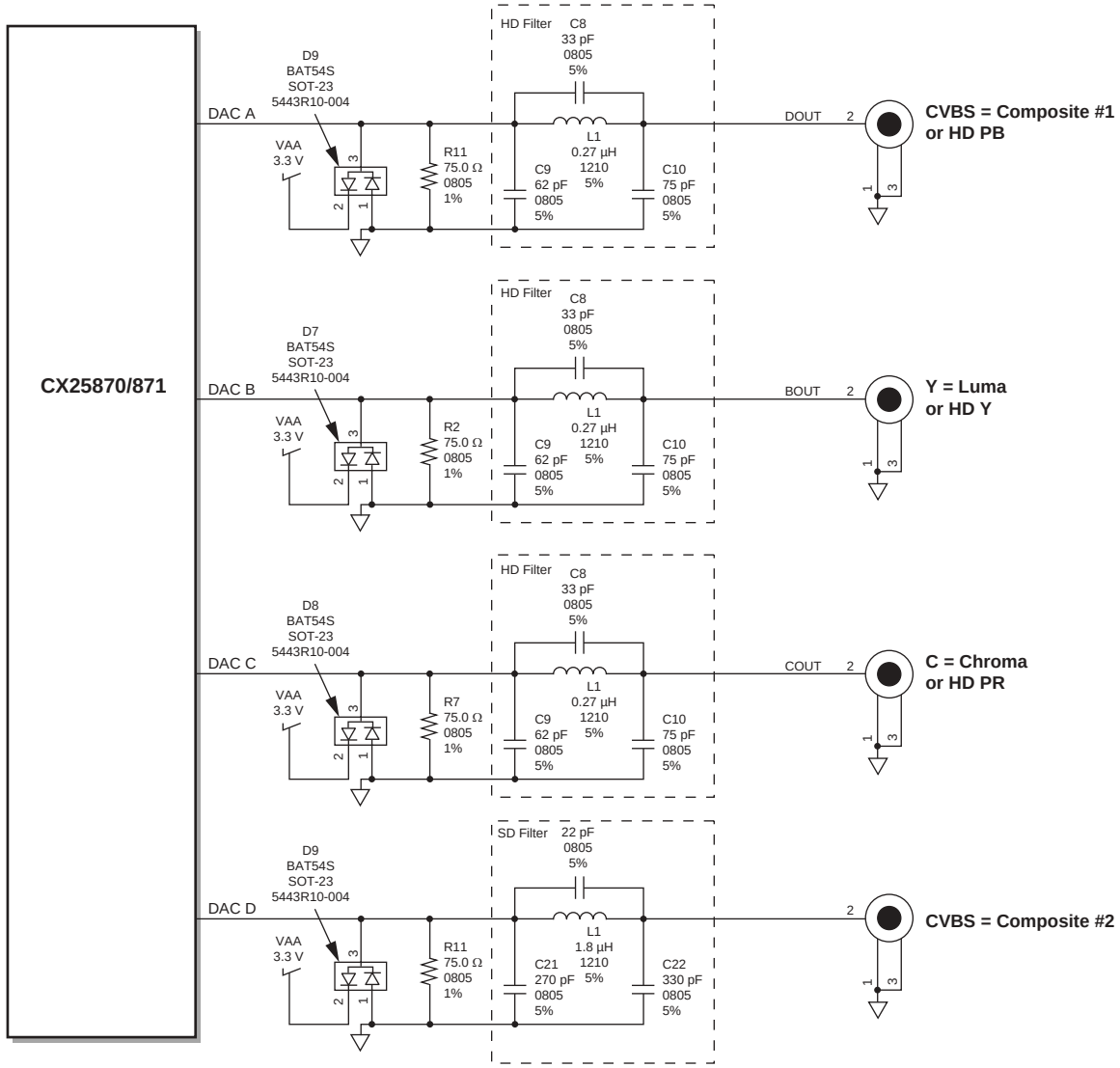

NOTE(S):

1. HD Filter imparts a passband of DC to 30 MHz.
2. SD Filter imparts a passband of DC to 8 MHz.

100381_084

E.12 Timing Diagrams for HDTV Output Mode

Review the next five pages (Figures E-4 through E-8) for illustrations of the relationship between the digital inputs received by the CX25870/871 and the HDTV Output signals transmitted by the encoder while in HDTV Output Mode.

Figure E-5. Proper Interface Timing between the HDTV Source Device (Master) and CX25870/871 (Timing Slave): Active Line in 1080i and 720p ATSC Format (RASTER SEL[1:0] = 11 or 10) for R, G, B, and Y Analog Outputs

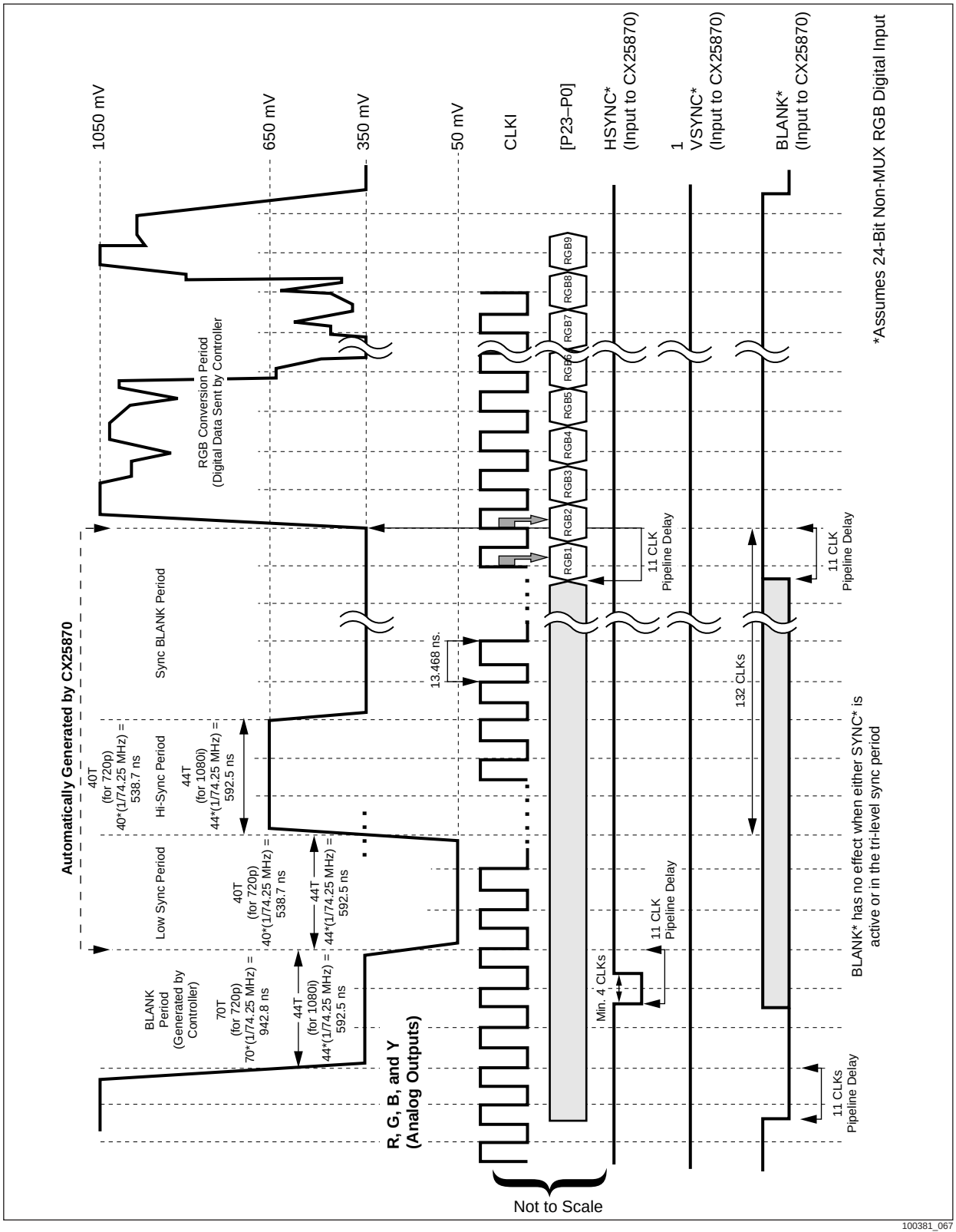

Figure E-6. Proper Interface Timing between the HDTV Source Device (Master) and CX25870/871 (Timing Slave): Active Line in 1080i and 720p ATSC Format (RASTER SEL[1:0] = 11 or 10) for P_B and P_R Analog Outputs

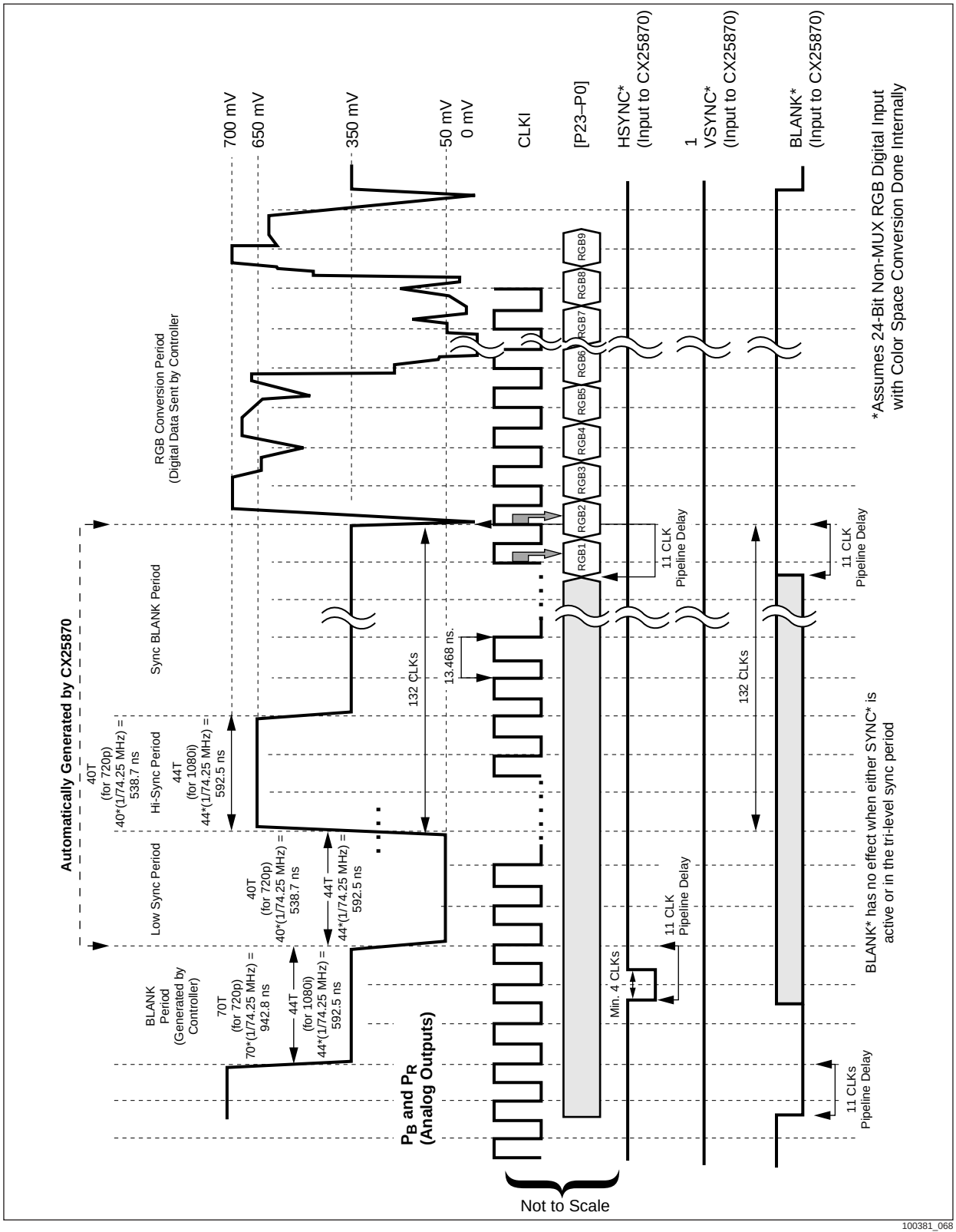

Figure E-7. Proper Interface Timing between the HDTV Source Device (Master) and CX25870/871 (Timing Slave): Broad Pulse Line in 1080i ATSC Format (RASTER SEL[1:0] = 11)—Odd Field

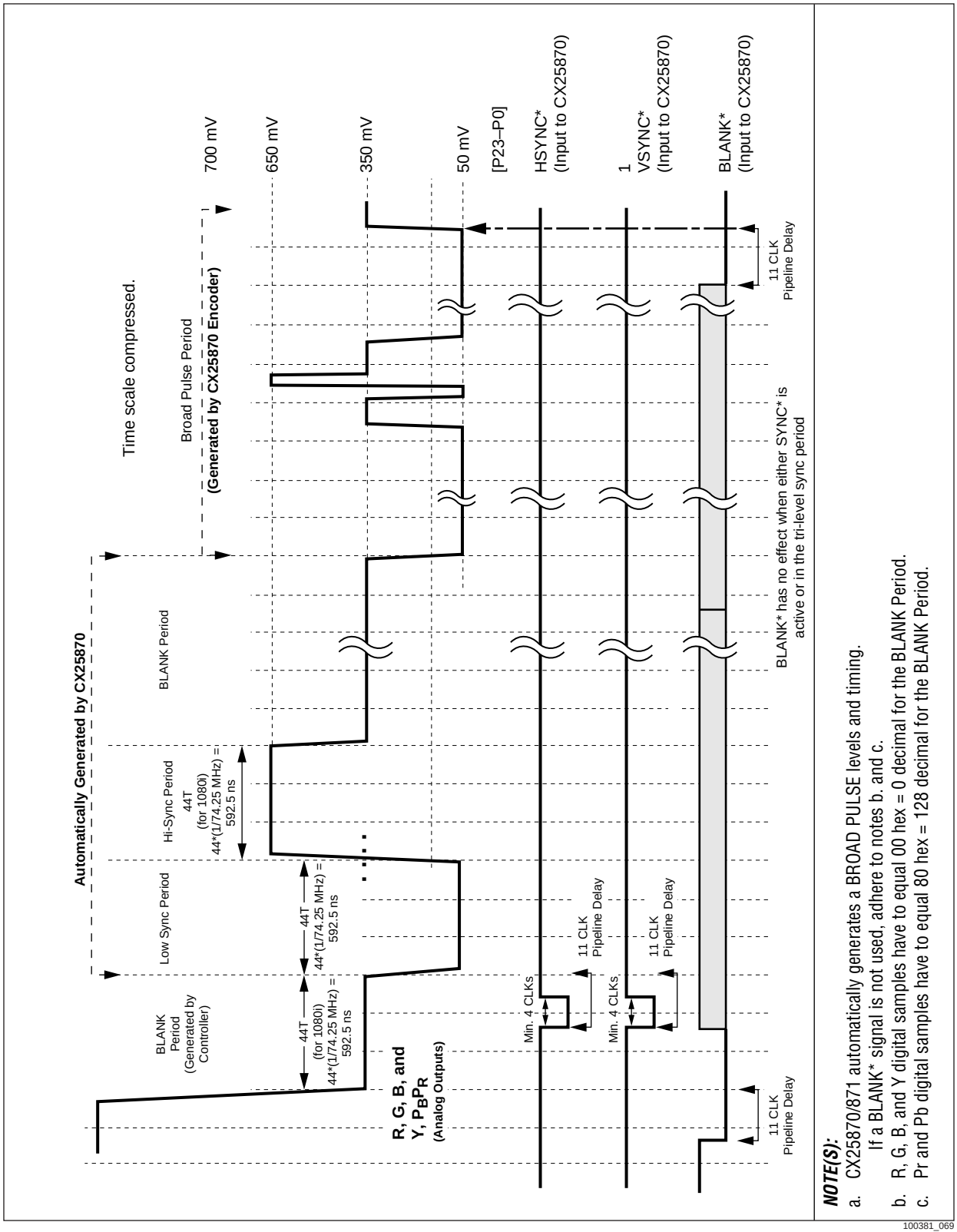

Figure E-8. Proper Interface Timing between the HDTV Source Device (Master) and CX25870/871 (Timing Slave): Two Successive Active Fields in 1080i ATSC Format (RASTER SEL[1:0] = 11)

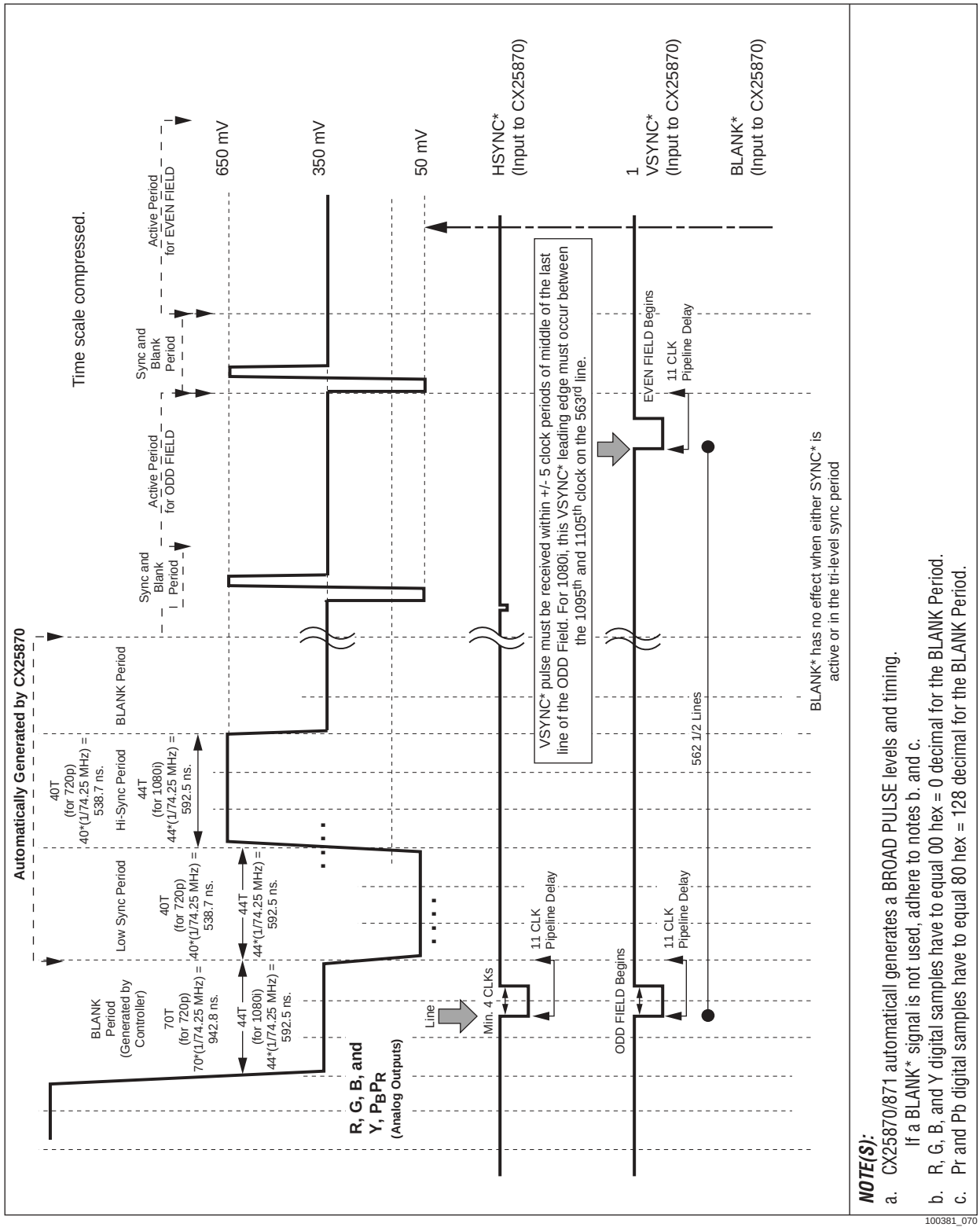

NOTE(S):

a. CX25870/871 automaticall generates a BROAD PULSE levels and timing.
If a BLANK* signal is not used, adhere to notes b. and c.

b. R, G, B, and Y digital samples have to equal 00 hex = 0 decimal for the BLANK Period.

c. Pr and Pb digital samples have to equal 80 hex = 128 decimal for the BLANK Period.

100381_070

Figure E-9. Proper Interface Timing between the HDTV Source Device (Master) and CX25870/871 (Timing Slave): Broad Pulse Line in 720p ATSC Format (RASTER SEL[1:0] = 10)

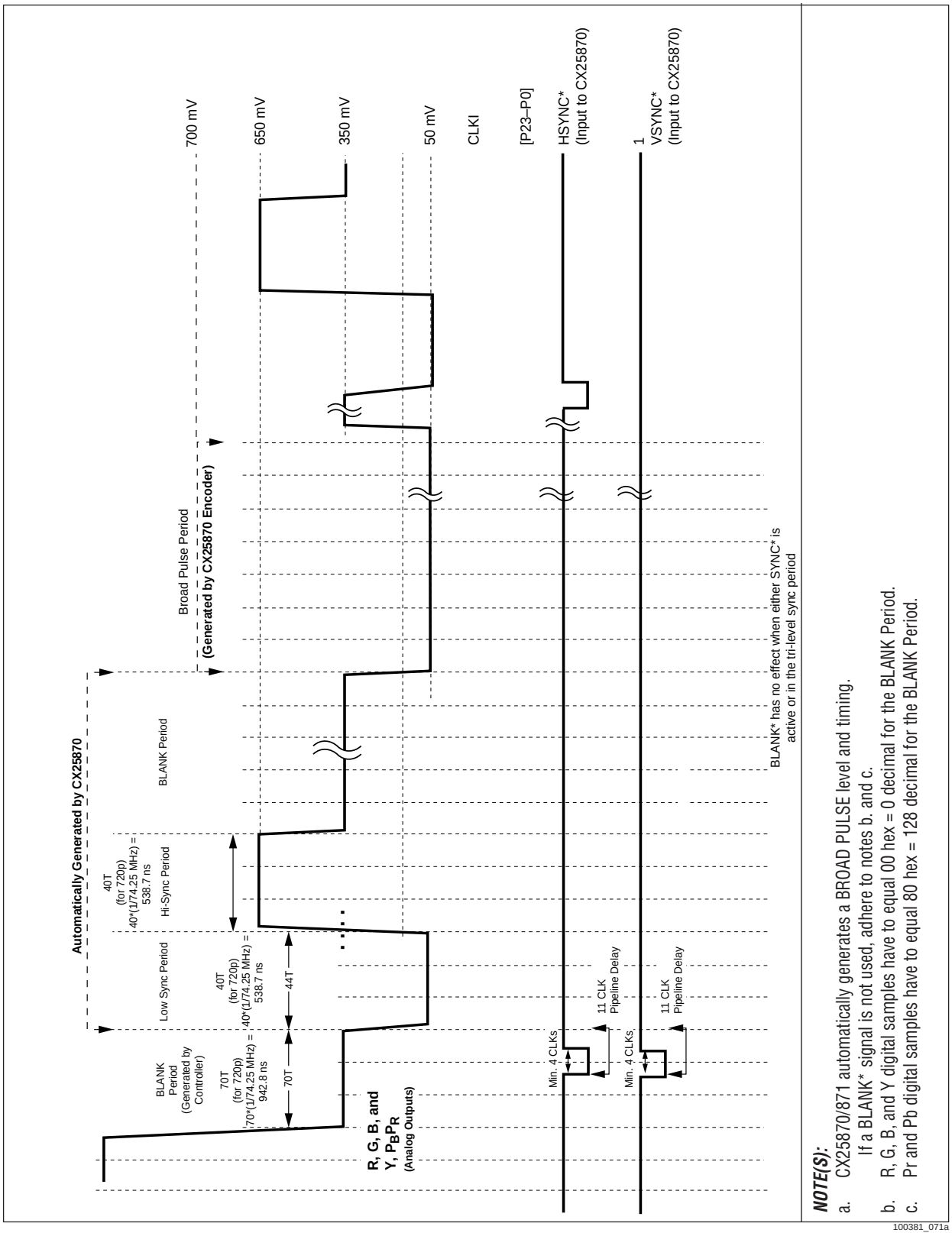

www.conexant.com
General Information:
U.S. and Canada: (800) 854-8099
International: (949) 483-6996
Headquarters – Newport Beach
4311 Jamboree Rd.
Newport Beach, CA. 92660-3007

CONEXANT™
What's next in communications technologies

Мы молодая и активно развивающаяся компания в области поставок электронных компонентов. Мы поставляем электронные компоненты отечественного и импортного производства напрямую от производителей и с крупнейших складов мира.

Благодаря сотрудничеству с мировыми поставщиками мы осуществляем комплексные и плановые поставки широчайшего спектра электронных компонентов.

Собственная эффективная логистика и склад в обеспечивает надежную поставку продукции в точно указанные сроки по всей России.

Мы осуществляем техническую поддержку нашим клиентам и предпродажную проверку качества продукции. На все поставляемые продукты мы предоставляем гарантию .

Осуществляем поставки продукции под контролем ВП МО РФ на предприятия военно-промышленного комплекса России , а также работаем в рамках 275 ФЗ с открытием отдельных счетов в уполномоченном банке. Система менеджмента качества компании соответствует требованиям ГОСТ ISO 9001.

Минимальные сроки поставки, гибкие цены, неограниченный ассортимент и индивидуальный подход к клиентам являются основой для выстраивания долгосрочного и эффективного сотрудничества с предприятиями радиоэлектронной промышленности, предприятиями ВПК и научно-исследовательскими институтами России.

С нами вы становитесь еще успешнее!

Наши контакты:

Телефон: +7 812 627 14 35

Электронная почта: sales@st-electron.ru

Адрес: 198099, Санкт-Петербург, Промышленная ул, дом № 19, литера Н, помещение 100-Н Офис 331