19-2672; Rev 5; 8/08

+1.2V to +5.5V, ±15kV ESD-Protected, 0.1µA, 35Mbps, 8-Channel Level Translators

General Description

The MAX3000E/MAX3001E/MAX3002–MAX3012 8-channel level translators provide the level shifting necessary to allow data transfer in a multivoltage system. Externally applied voltages, V_{CC} and V_L, set the logic levels on either side of the device. Logic signals present on the V_L side of the device appear as a higher voltage logic signal on the V_{CC} side of the device, and vice-versa.

The MAX3000E/MAX3001E/MAX3002/MAX3003 use an architecture specifically designed to be bidirectional without the use of a directional pin.

The MAX3000E/MAX3001E/MAX3002/MAX3004–MAX3012 feature an EN input that, when low, reduces the V_{CC} and V_L supply currents to < 2µA. The MAX3000E/MAX3001E also have ±15kV ESD protection on the I/O V_{CC} side for greater protection in applications that route signals externally. The MAX3000E operates at a guaranteed data rate of 230kbps. The MAX3001E operates at a guaranteed data rate of 4Mbps. The MAX3002–MAX3012 operate at a guaranteed data rate of 20Mbps over the entire specified operating voltage range.

The MAX3000E/MAX3001E/MAX3002–MAX3012 accept V_L voltages from +1.2V to +5.5V and V_{CC} voltages from +1.65V to +5.5V, making them ideal for data transfer between low-voltage ASICs/PLDs and higher voltage systems. The MAX3000E/MAX3001E/MAX3002–MAX3012 are available in 20-bump UCSP™, 20-pin TQFN (5mm x 5mm), and 20-pin TSSOP packages.

Applications

CMOS Logic-Level Translation

Cellphones

SPI™ and MICROWIRE™ Level Translation

Low-Voltage ASIC Level Translation

Smart Card Readers

Cellphone Cradles

Portable POS Systems

Portable Communication Devices

Low-Cost Serial Interfaces

GPS

Telecommunications Equipment

UCSP is a trademark of Maxim Integrated Products, Inc.

SPI is a trademark of Motorola, Inc.

MICROWIRE is a trademark of National Semiconductor.

Features

- **Guaranteed Data Rate Options**
  - **230kbps (MAX3000E)**
  - **4Mbps (MAX3001E)**
  - **20Mbps (MAX3002–MAX3012)**
- **Bidirectional Level Translation Without Using a Directional Pin (MAX3000E/MAX3001E/MAX3002/MAX3003)**
- **Unidirectional Level Translation (MAX3004–MAX3012)**
- **Operation Down to +1.2V on V_L**
- **±15kV ESD Protection on I/O V_{CC} Lines (MAX3000E/MAX3001E)**
- **Ultra-Low 0.1µA Supply Current in Shutdown**
- **Low Quiescent Current (< 10µA)**
- **UCSP, TQFN, and TSSOP Packages**

Ordering Information

PART	TEMP RANGE	PIN-PACKAGE
MAX3000EEUP	-40°C to +85°C	20 TSSOP
MAX3000EEBP-T	-40°C to +85°C	4 x 5 UCSP

Ordering Information continued at end of data sheet.

Note: *All devices operate over the -40°C to +85°C operating temperature range.*

Typical Operating Circuit

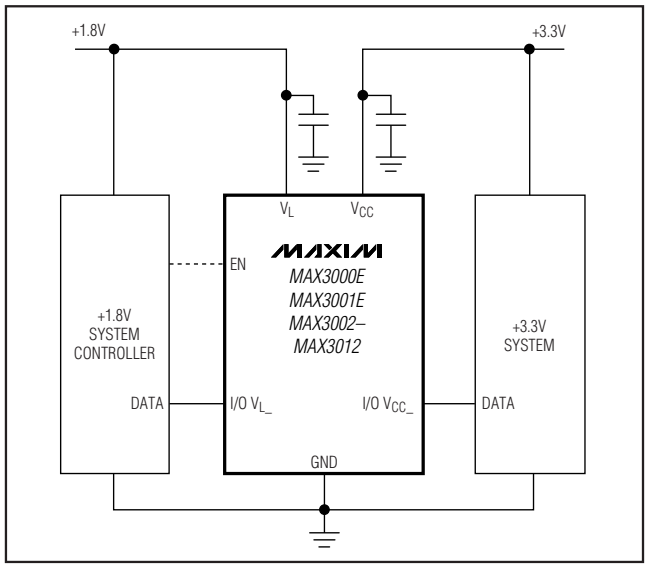

Pin Configurations and Functional Diagrams appear at end of data sheet.

For pricing, delivery, and ordering information, please contact Maxim/Dallas Direct! at 1-888-629-4642, or visit Maxim's website at www.maxim-ic.com.

+1.2V to +5.5V, ±15kV ESD-Protected, 0.1µA, 35Mbps, 8-Channel Level Translators

ABSOLUTE MAXIMUM RATINGS

(All voltages referenced to GND.)

V_{CC} ....-0.3V to +6V
V_L ....-0.3V to +6V
I/O $V_{CC_}$ ....-0.3V to (V_{CC} + 0.3V)
I/O $V_{L_}$ ....-0.3V to (V_L + 0.3V)
EN, EN A/B ....-0.3V to +6V
Short-Circuit Duration I/O $V_{L_}$, I/O $V_{CC_}$ to GND ....Continuous
Continuous Power Dissipation (T_A = +70°C)
20-Pin TSSOP (derate 7.0mW/°C above +70°C) 559mW
20-Bump UCSP (derate 10mW/°C above +70°C) 800mW
20-Pin 5mm x 5mm TQFN
(derate 20.0mW/°C above +70°C) 1667mW

Operating Temperature Ranges
MAX3001EAUP ....-40°C to +125°C
MAX300_EE_P ....-40°C to +85°C
MAX30_ _E_P ....-40°C to +85°C
Junction Temperature ....+150°C
Storage Temperature Range ....-65°C to +150°C
Lead Temperature (soldering, 10s) ....+300°C

Stresses beyond those listed under "Absolute Maximum Ratings" may cause permanent damage to the device. These are stress ratings only, and functional operation of the device at these or any other conditions beyond those indicated in the operational sections of the specifications is not implied. Exposure to absolute maximum rating conditions for extended periods may affect device reliability.

ELECTRICAL CHARACTERISTICS

(V_{CC} = +1.65V to +5.5V, V_L = +1.2V to V_{CC}, EN = V_L (MAX3000E/MAX3001E/MAX3002/MAX3004–MAX3012), EN A/B = V_L or 0 (MAX3003), T_A = T_{MIN} to T_{MAX}. Typical values are at V_{CC} = +1.65V, V_L = +1.2V, and T_A = +25°C.) (Notes 1, 2)

PARAMETER	SYMBOL	CONDITIONS	MIN	TYP	MAX	UNITS
POWER SUPPLIES						
V_L Supply Range	V_L		1.2		V_{CC}	V
V_{CC} Supply Range	V_{CC}		1.65		5.50	V
Supply Current from V_{CC}	I_{QVCC}	I/O $V_{CC_}$ = 0, I/O $V_{L_}$ = 0 or I/O $V_{CC_}$ = V_{CC}, I/O $V_{L_}$ = V_L, MAX3000E/MAX3002–MAX3012		0.1	10	µA
		I/O $V_{CC_}$ = 0, I/O $V_{L_}$ = 0 or I/O $V_{CC_}$ = V_{CC}, I/O $V_{L_}$ = V_L, MAX3001E		0.1	50	
Supply Current from V_L	I_{QVL}	I/O $V_{CC_}$ = 0, I/O $V_{L_}$ = 0 or I/O $V_{CC_}$ = V_{CC}, I/O $V_{L_}$ = V_L, MAX3000E/MAX3002–MAX3012		0.1	10	µA
		I/O $V_{CC_}$ = 0, I/O $V_{L_}$ = 0 or I/O $V_{CC_}$ = V_{CC}, I/O $V_{L_}$ = V_L, MAX3001E		0.1	50	
V_{CC} Shutdown Supply Current	$I_{SHDN-VCC}$	T_A = +25°C, EN = 0, MAX3000E/MAX3001E/MAX3002/ MAX3004–MAX3012		0.1	2	µA
		T_A = +25°C, EN A/B = 0, MAX3003		0.1	2	
V_L Shutdown Supply Current	$I_{SHDN-VL}$	T_A = +25°C, EN = 0, MAX3000E/MAX3001E/MAX3002/ MAX3004–MAX3012		0.1	2	µA
		T_A = +25°C, EN A/B = 0, MAX3003		0.1	2	

ELECTRICAL CHARACTERISTICS (continued)

(V_{CC} = +1.65V to +5.5V, V_L = +1.2V to V_{CC}, EN = V_L (MAX3000E/MAX3001E/MAX3002/MAX3004–MAX3012), EN A/B = V_L or 0 (MAX3003), T_A = T_{MIN} to T_{MAX}. Typical values are at V_{CC} = +1.65V, V_L = +1.2V, and T_A = +25°C.) (Notes 1, 2)

PARAMETER	SYMBOL	CONDITIONS	MIN	TYP	MAX	UNITS
I/O $V_{CC_}$ Three-State Output Leakage Current		T_A = +25°C, EN = 0, MAX3000E/MAX3001E/MAX3002/ MAX3004–MAX3012		0.1	2	µA
		T_A = +25°C, EN A/B = 0, MAX3003		0.1	2	
I/O $V_{L_}$ Three-State Output Leakage Current		EN A/B = 0, MAX3003		0.1	2	µA
I/O $V_{L_}$ Pulldown Resistance During Shutdown		EN = 0, MAX3000E/MAX3001E/MAX3002/ MAX3004–MAX3012	4.59		8.30	kΩ
EN or EN A/B Input Leakage Current		T_A = +25°C			1	µA
LOGIC-LEVEL THRESHOLDS						
I/O $V_{L_}$ Input-Voltage High Threshold	V_{IHL}				2/3 x V_L	V
I/O $V_{L_}$ Input-Voltage Low Threshold	V_{ILL}		1/3 x V_L			V
I/O $V_{CC_}$ Input-Voltage High Threshold	V_{IHC}				2/3 x V_{CC}	V
I/O $V_{CC_}$ Input-Voltage Low Threshold	V_{ILC}		1/3 x V_{CC}			V
EN, EN A/B Input-Voltage High Threshold	V_{IH}				V_L - 0.4	V
EN, EN A/B Input-Voltage Low Threshold	V_{IL}		0.4			V
I/O $V_{L_}$ Output-Voltage High	V_{OHL}	I/O $V_{L_}$ source current = 20µA, I/O $V_{CC_}$ ≥ V_{CC} - 0.4V	V_L - 0.4			V
I/O $V_{L_}$ Output-Voltage Low	V_{OLL}	I/O $V_{L_}$ sink current = 20µA, I/O $V_{CC_}$ ≤ 0.4V			0.4	V
I/O $V_{CC_}$ Output-Voltage High	V_{OHC}	I/O $V_{CC_}$ source current = 20µA, I/O $V_{L_}$ ≥ V_L - 0.4V	V_{CC} - 0.4			V
I/O $V_{CC_}$ Output-Voltage Low	V_{OLC}	I/O V_{CC} sink current = 20µA, I/O $V_{L_}$ ≤ 0.4V			0.4	V
ESD PROTECTION						
I/O $V_{CC_}$		Human Body Model, MAX3000E/MAX3001E		±15		kV

+1.2V to +5.5V, ±15kV ESD-Protected, 0.1µA, 35Mbps, 8-Channel Level Translators

TIMING CHARACTERISTICS

(V_{CC} = +1.65V to +5.5V, V_L = +1.2V to V_{CC}, EN = V_L (MAX3000E/MAX3001E/MAX3002/MAX3004–MAX3012), EN A/B = V_L or 0 (MAX3003), T_A = T_{MIN} to T_{MAX}. Typical values are at V_{CC} = +1.65V, V_L = +1.2V, and T_A = +25°C.) (Notes 1, 2)

PARAMETER	SYMBOL	CONDITIONS	MIN	TYP	MAX	UNITS
I/O $V_{CC_}$ Rise Time	t_{RVCC}	R_S = 50Ω, C_{VCC} = 50pF, MAX3000E, Figures 1a, 1b	400	800	1200	ns
		R_S = 50Ω, C_{VCC} = 50pF, MAX3001E, Figures 1a, 1b		25	50	
		R_S = 50Ω, C_{VCC} = 50pF, MAX3002–MAX3012, Figures 1a, 1b			15	
I/O $V_{CC_}$ Fall Time	t_{FVCC}	R_S = 50Ω, C_{VCC} = 50pF, MAX3000E, Figures 1a, 1b	400	800	1200	ns
		R_S = 50Ω, C_{VCC} = 50pF, MAX3001E, Figures 1a, 1b		25	50	
		R_S = 50Ω, C_{VCC} = 50pF, MAX3002–MAX3012, Figures 1a, 1b			15	
I/O $V_{L_}$ Rise Time	t_{RVL}	R_S = 50Ω, C_{VL} = 50pF, MAX3000E, Figures 2a, 2b	400	800	1200	ns
		R_S = 50Ω, C_{VL} = 50pF, MAX3001E, Figures 2a, 2b		25	50	
		R_S = 50Ω, C_{VL} = 15pF, MAX3002–MAX3012, Figures 2a, 2b			15	
I/O $V_{L_}$ Fall Time	t_{FVL}	R_S = 50Ω, C_{VL} = 50pF, MAX3000E, Figures 2a, 2b	400	800	1200	ns
		R_S = 50Ω, C_{VL} = 50pF, MAX3001E, Figures 2a, 2b		25	65	
		R_S = 50Ω, C_{VL} = 15pF, MAX3002–MAX3012, Figures 2a, 2b			15	
Propagation Delay (Driving I/O $V_{L_}$)	I/O_{VL-VCC}	R_S = 50Ω, C_{VCC} = 50pF, MAX3000E, Figures 1a, 1b			1000	ns
		R_S = 50Ω, C_{VCC} = 50pF, MAX3001E, Figures 1a, 1b			50	
		R_S = 50Ω, C_{VCC} = 50pF, MAX3002–MAX3012, Figures 1a, 1b			20	
Propagation Delay (Driving I/O $V_{CC_}$)	I/O_{VCC-VL}	R_S = 50Ω, C_{VL} = 50pF, MAX3000E, Figures 2a, 2b			1000	ns
		R_S = 50Ω, C_{VL} = 50pF, MAX3001E, Figures 2a, 2b			50	
		R_S = 50Ω, C_{VL} = 15pF, MAX3002–MAX3012, Figures 2a, 2b			20	

Note 1: All units are 100% production tested at T_A = +25°C. Limits over the operating temperature range are guaranteed by design and not production tested.

Note 2: For normal operation, ensure that $V_L < V_{CC}$. During power-up, $V_L > V_{CC}$ does not damage the device.

TIMING CHARACTERISTICS (continued)

(V_{CC} = +1.65V to +5.5V, V_L = +1.2V to V_{CC}, EN = V_L (MAX3000E/MAX3001E/MAX3002/MAX3004–MAX3012), EN A/B = V_L or 0 (MAX3003), T_A = T_{MIN} to T_{MAX}. Typical values are at V_{CC} = +1.65V, V_L = +1.2V, and T_A = +25°C.) (Notes 1, 2)

PARAMETER	SYMBOL	CONDITIONS	MIN	TYP	MAX	UNITS
Channel-to-Channel Skew	t_{SKEW}	R_S = 50Ω, C_{VCC} = 50pF, C_{VL} = 50pF, MAX3000E			500	ns
		R_S = 50Ω, C_{VCC} = 50pF, C_{VL} = 50pF, MAX3001E			10	
		R_S = 50Ω, C_{VCC} = 50pF, C_{VL} = 15pF, MAX3002–MAX3012			5	
Part-to-Part Skew	t_{PPSKEW}	R_S = 50Ω, C_{VCC} = 50pF, C_{VL} = 50pF, ΔT_A = +20°C, MAX3000E (Note 3)			800	ns
		R_S = 50Ω, C_{VCC} = 50pF, C_{VL} = 50pF, ΔT_A = +20°C, MAX3001E (Note 3)			30	
		R_S = 50Ω, C_{VCC} = 50pF, C_{VL} = 15pF, ΔT_A = +20°C, MAX3002–MAX3012 (Note 3)			10	
Propagation Delay from I/O $V_{L_}$ to I/O $V_{CC_}$ after EN	t_{EN-VCC}	C_{VCC} = 50pF, MAX3000E/MAX3001E, MAX3002–MAX3012, Figure 3			2	µs
Propagation Delay from I/O $V_{CC_}$ to I/O $V_{L_}$ after EN	t_{EN-VL}	C_{VL} = 50pF, MAX3000E/MAX3001E/ MAX3002/MAX3004–MAX3012, Figure 4			2	µs
		C_{VL} = 15pF, MAX3003, Figure 4			2	
Maximum Data Rate		R_S = 50Ω, C_{VCC} = 50pF, C_{VL} = 50pF, MAX3000E	230			kbps
		R_S = 50Ω, C_{VCC} = 50pF, C_{VL} = 50pF, MAX3001E	4			Mbps
		R_S = 50Ω, C_{VCC} = 50pF, C_{VL} = 15pF, MAX3002–MAX3012	20			

Note 3: V_{CC} from device 1 must equal V_{CC} of device 2; V_L from device 1 must equal V_L of device 2.

+1.2V to +5.5V, ±15kV ESD-Protected, 0.1µA, 35Mbps, 8-Channel Level Translators

TIMING CHARACTERISTICS—MAX3002–MAX3012

(V_{CC} = +1.65V to +5.5V, V_L = +1.2V to V_{CC}, EN = V_L (MAX3002/MAX3004–MAX3012), EN A/B = V_L or 0 (MAX3003), T_A = T_{MIN} to T_{MAX}.) (Notes 1, 2)

PARAMETER	SYMBOL	CONDITIONS	MIN	TYP	MAX	UNITS
+1.2V ≤ V_L ≤ V_{CC} ≤ +3.3V						
I/O $V_{CC_}$ Rise Time	t_{RVCC}				15	ns
I/O $V_{CC_}$ Fall Time	t_{FVCC}				15	ns
I/O $V_{L_}$ Rise Time	t_{RVL}				15	ns
I/O $V_{L_}$ Fall Time	t_{FVL}				15	ns
Propagation Delay	I/O_{VL-VCC}	Driving I/O $V_{L_}$			15	ns
	I/O_{VCC-VL}	Driving I/O $V_{CC_}$			15	
Channel-to-Channel Skew	t_{SKEW}	Each translator equally loaded			5	ns
Maximum Data Rate			20			Mbps
+2.5V ≤ V_L ≤ V_{CC} ≤ +3.3V						
I/O $V_{CC_}$ Rise Time	t_{RVCC}				8.5	ns
I/O $V_{CC_}$ Fall Time	t_{FVCC}				8.5	ns
I/O $V_{L_}$ Rise Time	t_{RVL}				8.5	ns
I/O $V_{L_}$ Fall Time	t_{FVL}				8.5	ns
Propagation Delay	I/O_{VL-VCC}	Driving I/O $V_{L_}$			8.5	ns
	I/O_{VCC-VL}	Driving I/O $V_{CC_}$			8.5	
Channel-to-Channel Skew	t_{SKEW}	Each translator equally loaded			10	ns
Maximum Data Rate			35			Mbps
+1.8V ≤ V_L ≤ V_{CC} ≤ +2.5V						
I/O $V_{CC_}$ Rise Time	t_{RVCC}				10	ns
I/O $V_{CC_}$ Fall Time	t_{FVCC}				10	ns
I/O $V_{L_}$ Rise Time	t_{RVL}				10	ns
I/O $V_{L_}$ Fall Time	t_{FVL}				10	ns
Propagation Delay	I/O_{VL-VCC}	Driving I/O $V_{L_}$			15	ns
	I/O_{VCC-VL}	Driving I/O $V_{CC_}$			10	
Channel-to-Channel Skew	t_{SKEW}	Each translator equally loaded			5	ns
Maximum Data Rate			30			Mbps

Typical Operating Characteristics

(T_A = +25°C, unless otherwise noted.)

V_L SUPPLY CURRENT vs. SUPPLY VOLTAGE (DRIVING I/O V_L, V_L = 1.8V)

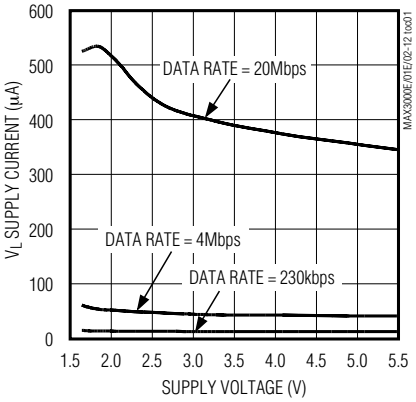

V_{CC} SUPPLY CURRENT vs. SUPPLY VOLTAGE (DRIVING I/O V_L, V_L = 1.8V)

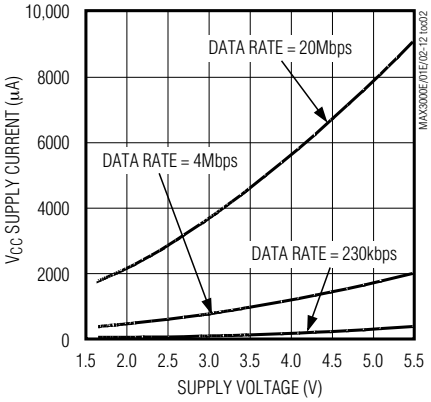

V_L SUPPLY CURRENT vs. TEMPERATURE (DRIVING I/O V_{CC}, V_{CC} = 3.3V, V_L = 1.8V)

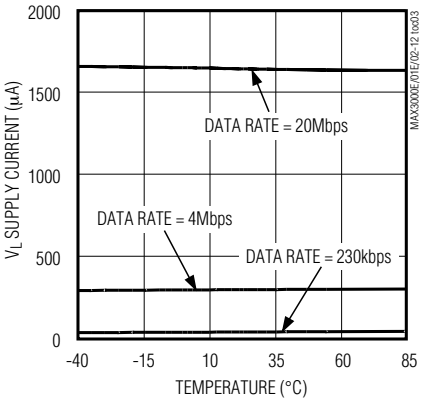

V_{CC} SUPPLY CURRENT vs. TEMPERATURE (DRIVING I/O V_{CC}, V_{CC} = 3.3V, V_L = 1.8V)

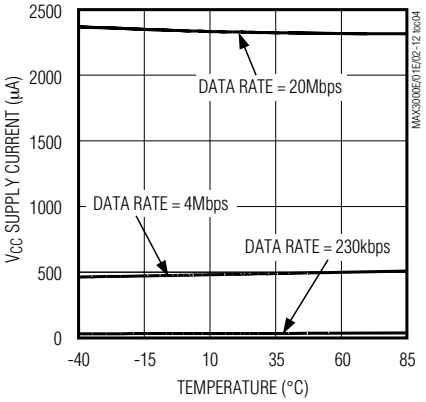

V_L SUPPLY CURRENT vs. CAPACITIVE LOAD ON I/O V_{CC} (DRIVING I/O V_L, V_{CC} = 3.3V, V_L = 1.8V)

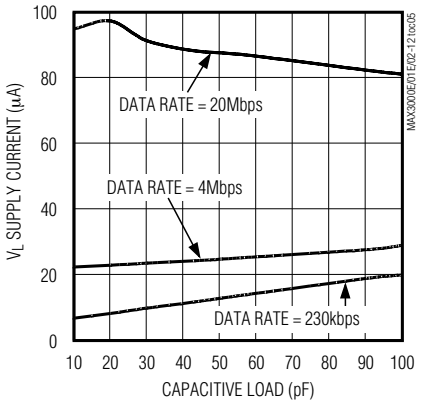

V_{CC} SUPPLY CURRENT vs. CAPACITIVE LOAD ON I/O V_{CC} (DRIVING I/O V_L, V_{CC} = 3.3V, V_L = 1.8V)

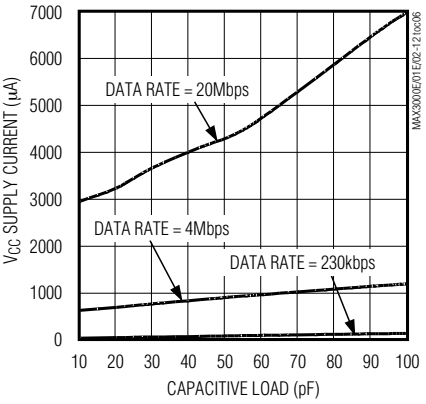

MAX3000E RISE/FALL TIME vs. CAPACITIVE LOAD ON I/O V_{CC} (DRIVING I/O V_L, V_{CC} = 3.3V, V_L = 1.8V)

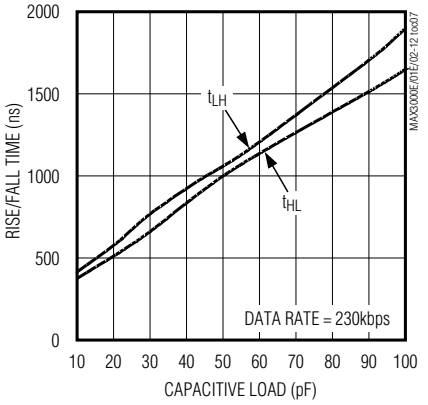

+1.2V to +5.5V, ±15kV ESD-Protected, 0.1µA, 35Mbps, 8-Channel Level Translators

Typical Operating Characteristics (continued)

(T_A = +25°C, unless otherwise noted.)

MAX3001E
RISE/FALL TIME vs. CAPACITIVE LOAD ON I/O V_{CC} (DRIVING I/O V_L, V_{CC} = 3.3V, V_L = 1.8V)

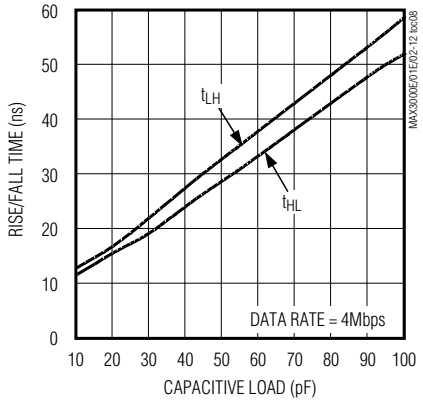

MAX3002–MAX3012
RISE/FALL TIME vs. CAPACITIVE LOAD ON I/O V_{CC} (DRIVING I/O V_L, V_{CC} = 3.3V, V_L = 1.8V)

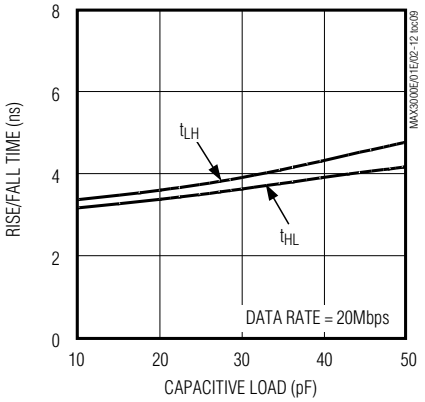

MAX3000E
RISE/FALL TIME vs. CAPACITIVE LOAD ON I/O V_L (DRIVING I/O V_{CC}, V_{CC} = 3.3V, V_L = 1.8V)

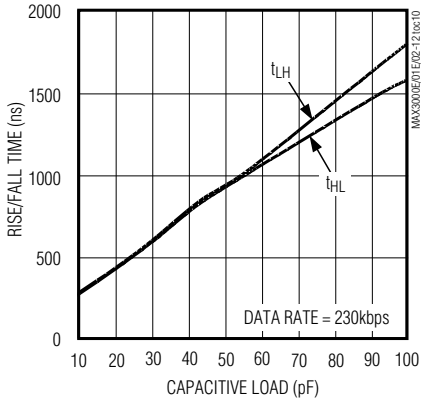

MAX3001E
RISE/FALL TIME vs. CAPACITIVE LOAD ON I/O V_L (DRIVING I/O V_{CC}, V_{CC} = 3.3V, V_L = 1.8V)

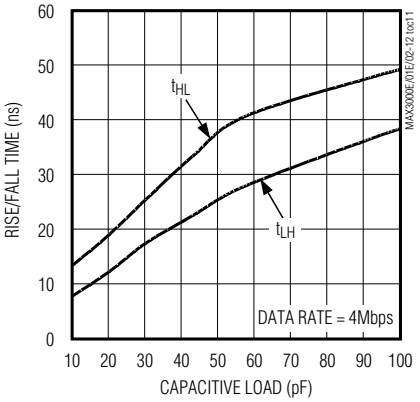

MAX3002–MAX3012
RISE/FALL TIME vs. CAPACITIVE LOAD ON I/O V_L (DRIVING I/O V_{CC}, V_{CC} = 3.3V, V_L = 1.8V)

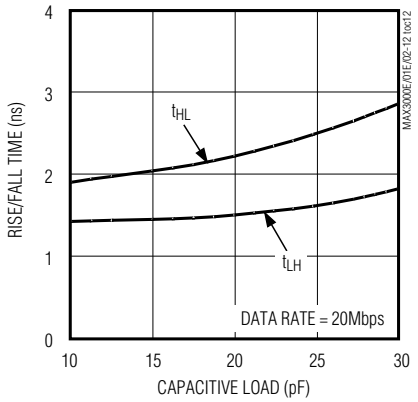

MAX3000E
PROPAGATION DELAY vs. CAPACITIVE LOAD ON I/O V_{CC} (DRIVING I/O V_L, V_{CC} = 3.3V, V_L = 1.8V)

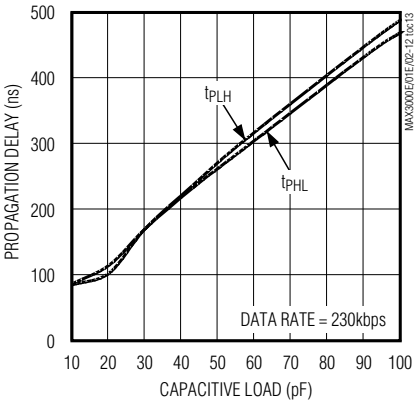

Typical Operating Characteristics (continued)

(T_A = +25°C, unless otherwise noted.)

MAX3001E
PROPAGATION DELAY vs. CAPACITIVE LOAD ON I/O V_{CC} (DRIVING I/O V_L, V_{CC} = 3.3V, V_L = 1.8V)

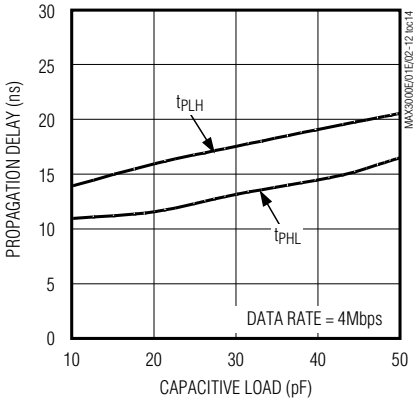

MAX3002–MAX3012
PROPAGATION DELAY vs. CAPACITIVE LOAD ON I/O V_{CC} (DRIVING I/O V_L, V_{CC} = 3.3V, V_L = 1.8V)

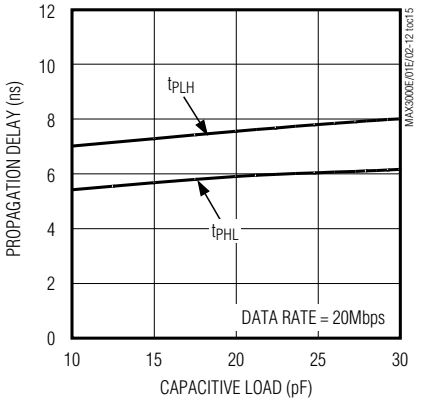

MAX3000E
PROPAGATION DELAY vs. CAPACITIVE LOAD ON I/O V_L (DRIVING I/O V_{CC}, V_{CC} = 3.3V, V_L = 1.8V)

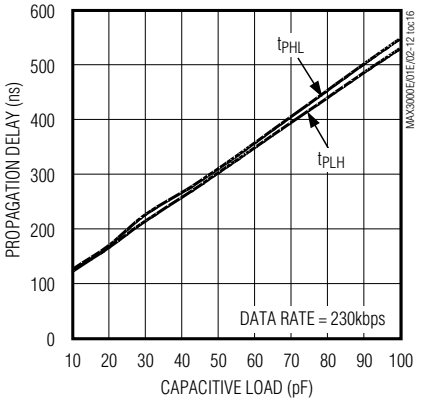

MAX3001E
PROPAGATION DELAY vs. CAPACITIVE LOAD ON I/O V_L (DRIVING I/O V_{CC}, V_{CC} = 3.3V, V_L = 1.8V)

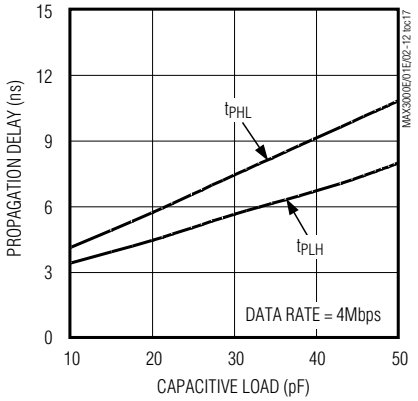

MAX3002–MAX3012
PROPAGATION DELAY vs. CAPACITIVE LOAD ON I/O V_L (DRIVING I/O V_{CC}, V_{CC} = 3.3V, V_L = 1.8V)

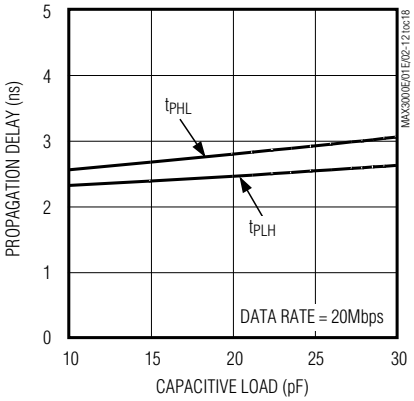

MAX3000E RAIL-TO-RAIL DRIVING (DRIVING I/O V_L, V_{CC} = 3.3V, V_L = 1.8V, CV_{CC} = 50pF, DATA RATE = 230kbps)

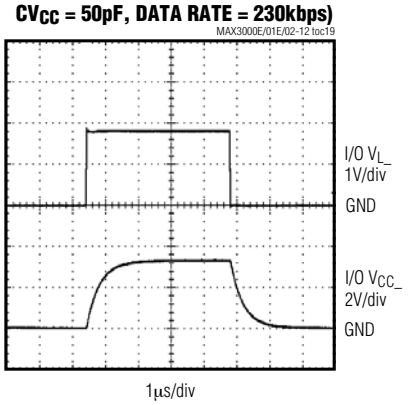

MAX3001E RAIL-TO-RAIL DRIVING (DRIVING I/O V_L, V_{CC} = 3.3V, V_L = 1.8V, CV_{CC} = 50pF, DATA RATE = 4Mbps)

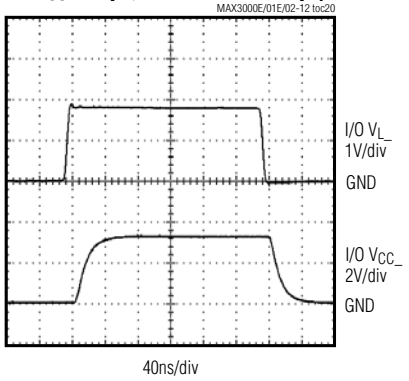

MAX3002–MAX3012 RAIL-TO-RAIL DRIVING (DRIVING I/O V_L, V_{CC} = 3.3V, V_L = 1.8V, CV_{CC} = 50pF, DATA RATE = 20Mbps)

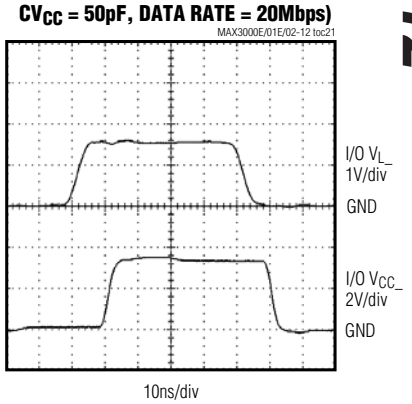

+1.2V to +5.5V, ±15kV ESD-Protected, 0.1µA, 35Mbps, 8-Channel Level Translators

Pin Description

MAX3000E/MAX3001E/MAX3002

PIN			NAME	FUNCTION
TSSOP	UCSP	TQFN		
1	B1	19	I/O V_L1	Input/Output 1, Referenced to V_L
2	A1	20	V_L	Logic Input Voltage, $+1.2V \le V_L \le V_{CC}$. Bypass V_L to GND with a 0.1µF capacitor.
3	A2	1	I/O V_L2	Input/Output 2, Referenced to V_L
4	B2	2	I/O V_L3	Input/Output 3, Referenced to V_L
5	A3	3	I/O V_L4	Input/Output 4, Referenced to V_L
6	B3	4	I/O V_L5	Input/Output 5, Referenced to V_L
7	A4	5	I/O V_L6	Input/Output 6, Referenced to V_L
8	B4	6	I/O V_L7	Input/Output 7, Referenced to V_L
9	A5	7	I/O V_L8	Input/Output 8, Referenced to V_L
10	B5	8	EN	Enable Input. If EN is pulled low, I/O $V_{CC}1$ to I/O $V_{CC}8$ are in three-state, while I/O V_L1 to I/O V_L8 have internal 6kΩ pulldown resistors. Drive EN high (V_L) for normal operation.
11	C5	9	GND	Ground
12	D5	10	I/O $V_{CC}8$	Input/Output 8, Referenced to V_{CC}
13	C4	11	I/O $V_{CC}7$	Input/Output 7, Referenced to V_{CC}
14	D4	12	I/O $V_{CC}6$	Input/Output 6, Referenced to V_{CC}
15	C3	13	I/O $V_{CC}5$	Input/Output 5, Referenced to V_{CC}
16	D3	14	I/O $V_{CC}4$	Input/Output 4, Referenced to V_{CC}
17	C2	15	I/O $V_{CC}3$	Input/Output 3, Referenced to V_{CC}
18	D2	16	I/O $V_{CC}2$	Input/Output 2, Referenced to V_{CC}
19	D1	17	V_{CC}	V_{CC} Input Voltage, $+1.65V \le V_{CC} \le +5.5V$. Bypass V_{CC} to GND with a 0.1µF capacitor.
20	C1	18	I/O $V_{CC}1$	Input/Output 1, Referenced to V_{CC}
—	—	EP	EP	Exposed Pad. Connect to GND.

Pin Description (continued)

MAX3003

PIN			NAME	FUNCTION
TSSOP	UCSP	TQFN		
1	B1	19	I/O V_L1A	Input/Output 1A, Referenced to V_L
2	A1	20	V_L	Logic Input Voltage, +1.2V ≤ V_L ≤ V_{CC}. Bypass V_L to GND with a 0.1µF capacitor.
3	A2	1	I/O V_L2A	Input/Output 2A, Referenced to V_L
4	B2	2	I/O V_L3A	Input/Output 3A, Referenced to V_L
5	A3	3	I/O V_L4A	Input/Output 4A, Referenced to V_L
6	B3	4	I/O V_L1B	Input/Output 1B, Referenced to V_L
7	A4	5	I/O V_L2B	Input/Output 2B, Referenced to V_L
8	B4	6	I/O V_L3B	Input/Output 3B, Referenced to V_L
9	A5	7	I/O V_L4B	Input/Output 4B, Referenced to V_L
10	B5	8	EN A/B	Enable Input. If EN A/B is pulled low, channels 1B through 4B are active, and channels 1A through 4A are in three-state. If EN A/B is driven high to V_L, channels 1A through 4A are active, and channels 1B through 4B are in three-state.
11	C5	9	GND	Ground
12	D5	10	I/O V_{CC}4B	Input/Output 4B, Referenced to V_{CC}
13	C4	11	I/O V_{CC}3B	Input/Output 3B, Referenced to V_{CC}
14	D4	12	I/O V_{CC}2B	Input/Output 2B, Referenced to V_{CC}
15	C3	13	I/O V_{CC}1B	Input/Output 1B, Referenced to V_{CC}
16	D3	14	I/O V_{CC}4A	Input/Output 4A, Referenced to V_{CC}
17	C2	15	I/O V_{CC}3A	Input/Output 3A, Referenced to V_{CC}
18	D2	16	I/O V_{CC}2A	Input/Output 2A, Referenced to V_{CC}
19	D1	17	V_{CC}	V_{CC} Input Voltage, +1.65V ≤ V_{CC} ≤ +5.5V. Bypass V_{CC} to GND with a 0.1µF capacitor.
20	C1	18	I/O V_{CC}1A	Input/Output 1A, Referenced to V_{CC}
—	—	EP	EP	Exposed Pad. Connect to GND.

+1.2V to +5.5V, ±15kV ESD-Protected, 0.1µA, 35Mbps, 8-Channel Level Translators

Pin Description (continued)

MAX3004–MAX3012

NAME	FUNCTION (Note 1)
V_{CC}	V_{CC} Input Voltage, +1.65V < V_{CC} < +5.5V. Bypass V_{CC} to GND with a 0.1µF capacitor.
V_L	Logic Input Voltage, +1.2V ≤ V_L ≤ V_{CC}. Bypass V_L to GND with a 0.1µF capacitor.
GND	Ground
EN (MAX3004)	Enable Input. If EN is pulled low, $OV_{CC}1$–$OV_{CC}8$ are in three-state, while IV_L1–IV_L8 have 6kΩ pulldown resistors. Drive EN high (V_L) for normal operation.
EN (MAX3005)	Enable Input. If EN is pulled low, $IV_{CC}1$ and $OV_{CC}2$–$OV_{CC}8$ are in three-state, while OV_L1 and IV_L2–IV_L8 have 6kΩ pulldown resistors. Drive EN high (V_L) for normal operation.
EN (MAX3006)	Enable Input. If EN is pulled low, $IV_{CC}1$, $IV_{CC}2$, and $OV_{CC}3$–$OV_{CC}8$ are in three-state, while OV_L1, OV_L2, and IV_L3–IV_L8 have 6kΩ pulldown resistors. Drive EN high (V_L) for normal operation.
EN (MAX3007)	Enable Input. If EN is pulled low, $IV_{CC}1$, $IV_{CC}2$, $IV_{CC}3$, and $OV_{CC}4$–$OV_{CC}8$ are in three-state, while OV_L1, OV_L2, OV_L3, and IV_L4–IV_L8 have 6kΩ pulldown resistors. Drive EN high (V_L) for normal operation.
EN (MAX3008)	Enable Input. If EN is pulled low, $IV_{CC}1$–$IV_{CC}4$ and $OV_{CC}5$–$OV_{CC}8$ are in three-state, while OV_L1–OV_L4 and IV_L5–IV_L8 have 6kΩ pulldown resistors. Drive EN high (V_L) for normal operation.
EN (MAX3009)	Enable Input. If EN is pulled low, $IV_{CC}1$–$IV_{CC}5$, $OV_{CC}6$, $OV_{CC}7$, and $OV_{CC}8$ are in three-state, while OV_L1–OV_L5, IV_L6, IV_L7, and IV_L8 have 6kΩ pulldown resistors. Drive EN high (V_L) for normal operation.
EN (MAX3010)	Enable Input. If EN is pulled low, $IV_{CC}1$–$IV_{CC}6$, $OV_{CC}7$, and $OV_{CC}8$ are in three-state, while OV_L1–OV_L6, IV_L7, and IV_L8 have 6kΩ pulldown resistors. Drive EN high (V_L) for normal operation.
EN (MAX3011)	Enable Input. If EN is pulled low, $IV_{CC}1$–$IV_{CC}7$ and $OV_{CC}8$ are in three-state, while OV_L1–OV_L7 and IV_L8 have 6kΩ pulldown resistors. Drive EN high (V_L) for normal operation.
EN (MAX3012)	Enable Input. If EN is pulled low, $IV_{CC}1$–$IV_{CC}8$ are in three-state, while OV_L1–OV_L8 have 6kΩ pulldown resistors. Drive EN high (V_L) for normal operation.
IV_L1–IV_L8	Inputs Referenced to V_L, Numbers 1 to 8
OV_L1–OV_L8	Outputs Referenced to V_L, Numbers 1 to 8
$IV_{CC}1$–$IV_{CC}8$	Inputs Referenced to V_{CC}, Numbers 1 to 8
$OV_{CC}1$–$OV_{CC}8$	Outputs Referenced to V_{CC}, Numbers 1 to 8

Note 1: For specific pin numbers, see the *Pin Configurations*.

Test Circuits/Timing Diagrams

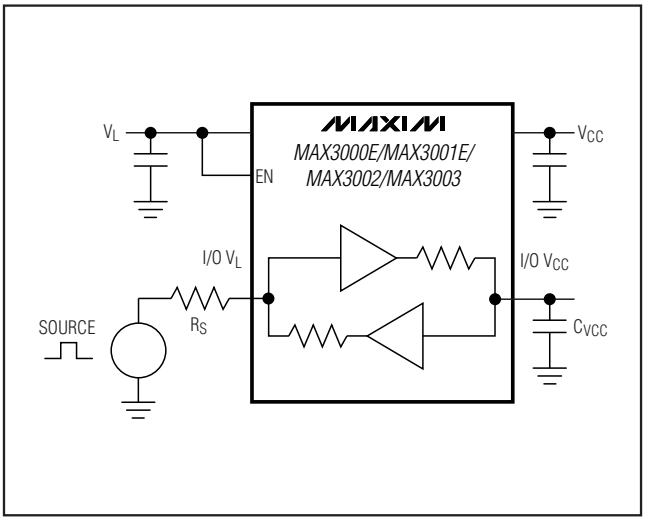

Figure 1a. Driving I/O V_L

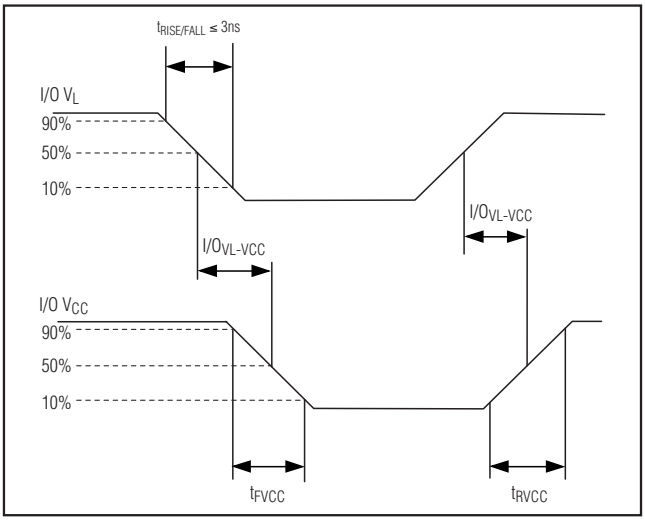

Figure 1b. Timing for Driving I/O V_L

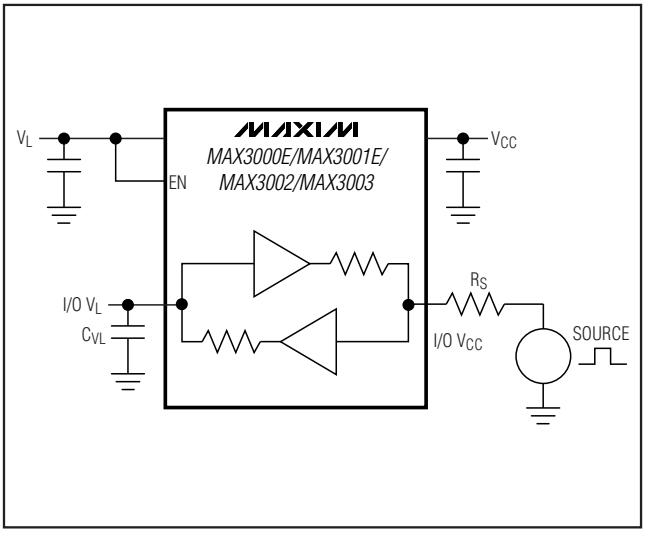

Figure 2a. Driving I/O V_{CC}

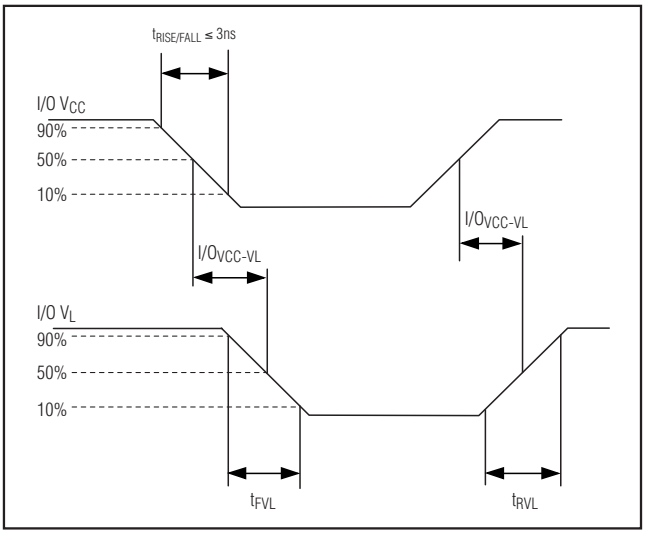

Figure 2b. Timing for Driving I/O V_{CC}

+1.2V to +5.5V, ±15kV ESD-Protected, 0.1µA, 35Mbps, 8-Channel Level Translators

Test Circuits/Timing Diagrams (continued)

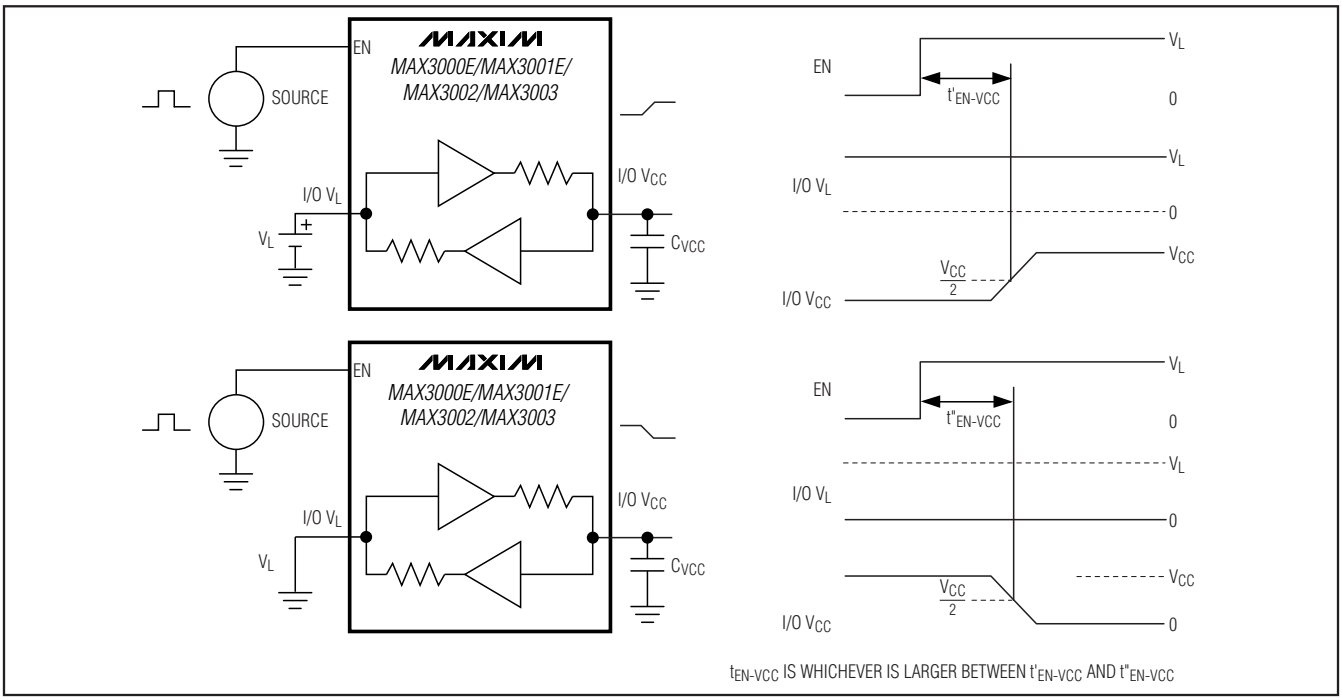

Figure 3. Propagation Delay from I/O V_L to I/O V_{CC} After EN

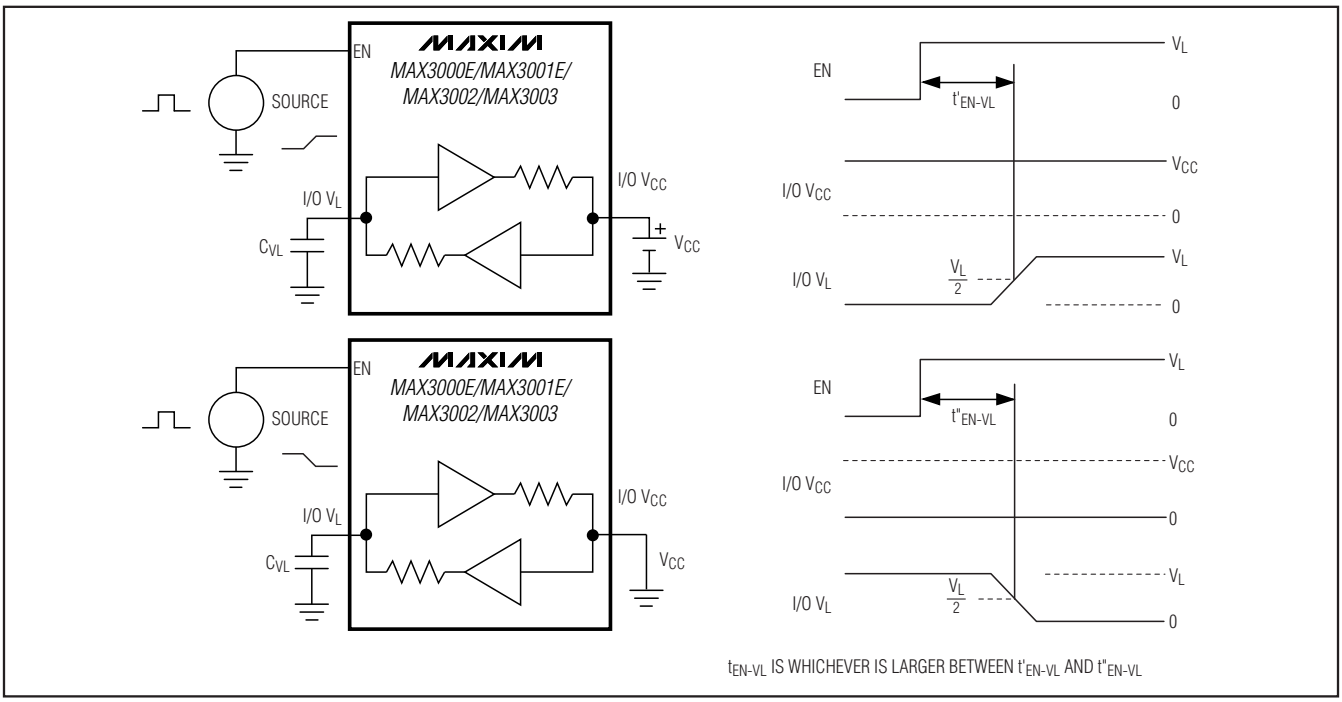

Figure 4. Propagation Delay from I/O V_{CC} to I/O V_L After EN

Detailed Description

The MAX3000E/MAX3001E/MAX3002–MAX3012 logic-level translators provide the level shifting necessary to allow data transfer in a multivoltage system. Externally applied voltages, V_{CC} and V_L, set the logic levels on either side of the device. Logic signals present on the V_L side of the device appear as a higher voltage logic signal on the V_{CC} side of the device, and vice-versa. The MAX3000E/MAX3001E/MAX3002/MAX3003 are bidirectional level translators allowing data translation in either direction ($V_L \leftrightarrow V_{CC}$) on any single data line. These devices use an architecture specifically designed to be bidirectional without the use of a direction pin. The MAX3004–MAX3012 unidirectional level translators level shift data in one direction ($V_L \rightarrow V_{CC}$ or $V_{CC} \rightarrow V_L$) on any single data line. The MAX3000E/MAX3001E/ MAX3002–MAX3012 accept V_L from +1.2V to +5.5V. All devices have V_{CC} ranging from +1.65V to +5.5V, making them ideal for data transfer between low-voltage ASICs/PLDs and higher voltage systems.

The MAX3000E/MAX3001E/MAX3002/MAX3004–MAX3012 feature an output enable mode that reduces V_{CC} supply current to less than 2µA, and V_L supply current to less than 2µA when in shutdown. The MAX3000E/MAX3001E have ±15kV ESD protection on the V_{CC} side for greater protection in applications that route signals externally. The MAX3000E operates at a guaranteed data rate of 230kbps; the MAX3001E operates at a guaranteed data rate of 4Mbps and the MAX3002–MAX3012 are guaranteed with a data rate of 20Mbps of operation over the entire specified operating voltage range.

Level Translation

For proper operation, ensure that $+1.65V \leq V_{CC} \leq +5.5V$, $+1.2V \leq V_L \leq +5.5V$, and $V_L \leq V_{CC}$. During power-up sequencing, $V_L \geq V_{CC}$ does not damage the device. During power-supply sequencing, when V_{CC} is floating and V_L is powering up, up to 10mA current can be sourced to each load on the V_L side, yet the device does not latch up.

The maximum data rate also depends heavily on the load capacitance (see the *Typical Operating Characteristics*), output impedance of the driver, and the operational voltage range (see the *Timing Characteristics* table).

Input Driver Requirements

The MAX3001E/MAX3002–MAX3012 architecture is based on a one-shot accelerator output stage. See Figure 5. Accelerator output stages are always in three-state except when there is a transition on any of the translators on the input side, either I/O V_L or I/O V_{CC}.

When there is such a transition, the accelerator stages become active, charging (discharging) the capacitances at the I/Os. Due to its bidirectional nature, both stages become active during the one-shot pulse. This can lead to some current feeding into the external source that is driving the translator. However, this behavior helps to speed up the transition on the driven side.

For proper full-speed operation, the output current of a device that drives the inputs of the MAX3000E/MAX3001E/MAX3002–MAX3012 should meet the following requirements:

- MAX3000E (230kbps):
  $i > 1mA$, $R_{drv} < 1k\Omega$
- MAX3001E (4Mbps):
  $i > 10^7 \times V \times (C + 10pF)$
- MAX3002–MAX3012 (20Mbps):
  $i > 10^8 \times V \times (C + 10pF)$

where i is the driver output current, V is the logic-supply voltage (i.e., V_L or V_{CC}) and C is the parasitic capacitance of the signal line.

Enable Output Mode (EN, EN A/B)

The MAX3000E/MAX3001E/MAX3002 and the MAX3004–MAX3012 feature an EN input, and the MAX3003 has an EN A/B input. Pull EN low to set the MAX3000E/MAX3001E/MAX3002/MAX3004–MAX3012s' I/O $V_{CC}1$ through I/O $V_{CC}8$ in three-state output mode, while I/O V_L1 through I/O V_L8 have internal 6kΩ pulldown resistors. Drive EN to logic-high (V_L) for normal operation. The MAX3003 is intended for bus multiplexing or bus switching applications. Drive EN A/B low to place channels 1B through 4B in active mode, while channels 1A through 4A are in three-state mode. Drive EN A/B to logic-high (V_L) to enable channels 1A through 4A, while channels 1B through 4B remain in three-state mode.

±15kV ESD Protection

As with all Maxim devices, ESD-protection structures are incorporated on all pins to protect against electrostatic discharges encountered during handling and assembly. The I/O V_{CC} lines have extra protection against static discharge. Maxim's engineers have developed state-of-the-art structures to protect these pins against ESD of ±15kV without damage. The ESD structures withstand high ESD in all states: normal operation, three-state output mode, and powered down. After an ESD event, Maxim's E versions keep working without latchup, whereas competing products can latch and must be powered down to remove latchup.

+1.2V to +5.5V, ±15kV ESD-Protected, 0.1µA, 35Mbps, 8-Channel Level Translators

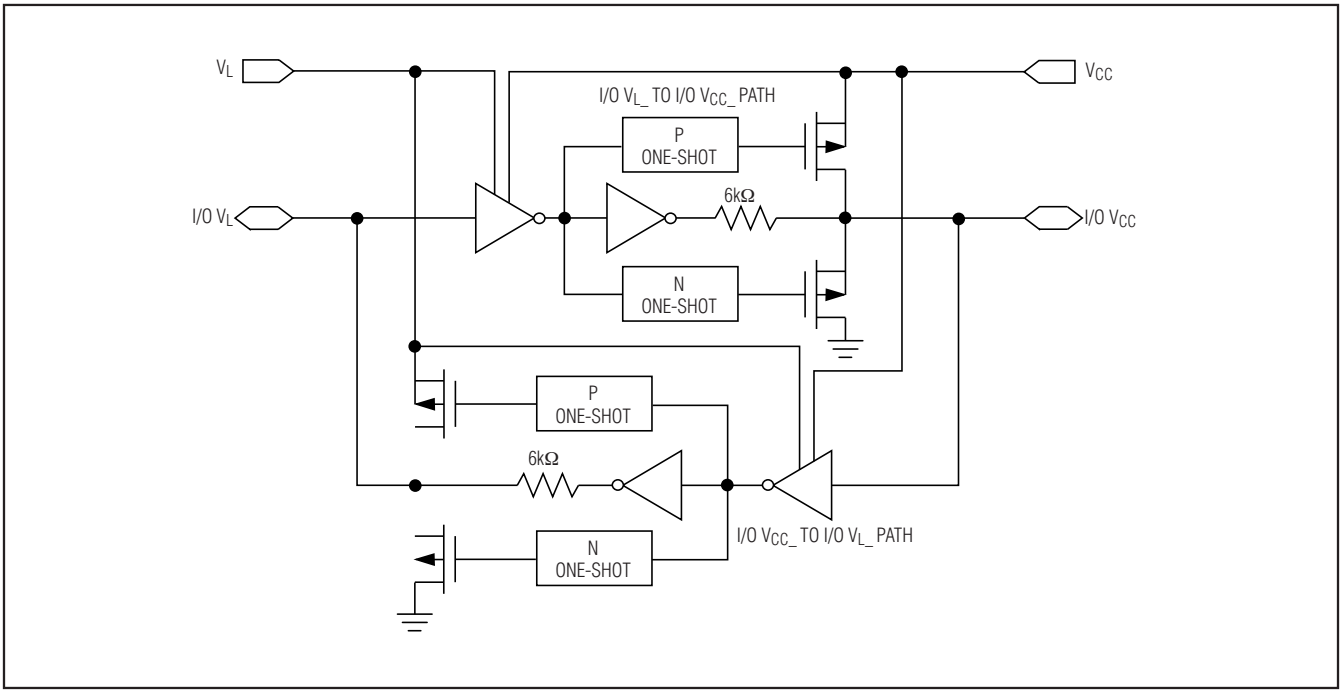

Figure 5. MAX3001E/MAX3002–MAX3012 Simplified Functional Diagram (1 I/O Line)

ESD protection can be tested in various ways. The I/O V_{CC} lines of the MAX3000E/MAX3001E are characterized for protection to ±15kV using the Human Body Model.

ESD Test Conditions

ESD performance depends on a variety of conditions. Contact Maxim for a reliability report that documents test setup, test methodology, and test results.

Human Body Model

Figure 7a shows the Human Body Model and Figure 7b shows the current waveform it generates when discharged into a low impedance. This model consists of a 100pF capacitor charged to the ESD voltage of interest, which is then discharged into the test device through a 1.5kΩ resistor.

Machine Model

The Machine Model for ESD tests all pins using a 200pF storage capacitor and zero discharge resistance. Its objective is to emulate the stress caused by contact that occurs with handling and assembly during manufacturing. Of course, all pins require this protection during manufacturing, not just inputs and outputs. Therefore, after PCB assembly, the Machine Model is less relevant to I/O ports.

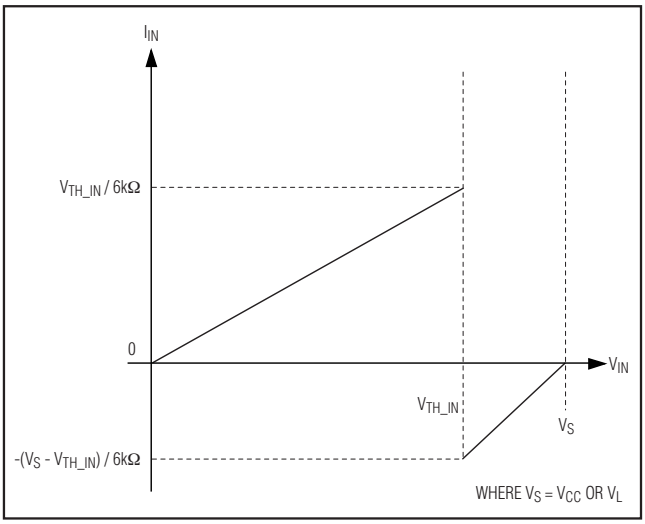

Figure 6. Typical I_{IN} vs. V_{IN}

Applications Information

Power-Supply Decoupling

To reduce ripple and the chance of transmitting incorrect data, bypass V_L and V_{CC} to ground with a 0.1µF capacitor. To ensure full ±15kV ESD protection, bypass V_{CC} to ground with a 1µF capacitor. Place all capacitors as close to the power-supply inputs as possible.

I²C Level Translation

For I²C level translation for I²C applications, please refer to the MAX3372E–MAX3379E/MAX3390E–MAX3393E datasheet.

Unidirectional vs. Bidirectional Level Translator

The MAX3000E/MAX3001E/MAX3002/MAX3003 bidirectional translators can operate as a unidirectional device to translate signals without inversion. The MAX3004–MAX3012 unidirecitional level translators, level-shift data in one direction ($V_L \rightarrow V_{CC}$ or $V_{CC} \rightarrow V_L$) on any single data line (see the *Ordering Information*.) These devices provide the smallest solution (UCSP package) for unidirectional level translation without inversion.

+1.2V to +5.5V, ±15kV ESD-Protected, 0.1µA, 35Mbps, 8-Channel Level Translators

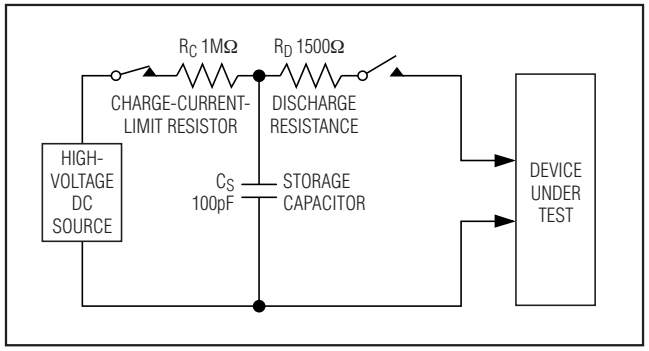

Figure 7a. Human Body ESD Test Model

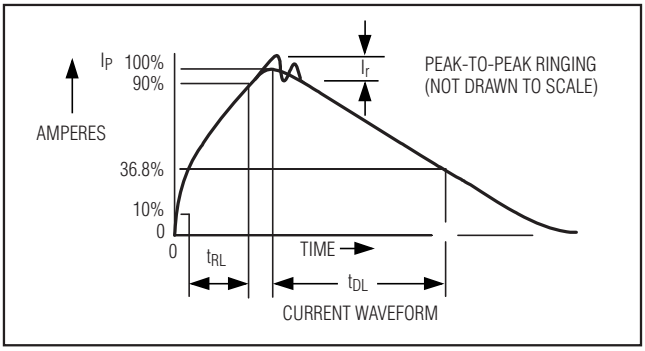

Figure 7b. Human Body Current Waveform

Selector Guide

PART	EN	EN A/B	Tx/Rx*	DATA RATE	ESD PROTECTION (kV)
MAX3000E	√	—	8/8	230kbps	±15
MAX3001E	√	—	8/8	4Mbps	±15
MAX3002	√	—	8/8	**	±2
MAX3003	—	√	8/8	**	±2
MAX3004	√	—	8/0	**	±2
MAX3005	√	—	7/1	**	±2
MAX3006	√	—	6/2	**	±2
MAX3007	√	—	5/3	**	±2
MAX3008	√	—	4/4	**	±2
MAX3009	√	—	3/5	**	±2
MAX3010	√	—	2/6	**	±2
MAX3011	√	—	1/7	**	±2
MAX3012	√	—	0/8	**	±2

**Tx = $V_L \rightarrow V_{CC}$; Rx = $V_{CC} \rightarrow V_L$*

***See Table 1.*

Table 1. Data Rate

$V_L \leftrightarrow V_{CC}$ (V)	MAX3002–MAX3012 GUARANTEED DATA RATE (Mbps)
1.2 ↔ 5.5	40
1.2 ↔ 3.3	20
2.5 ↔ 3.3	35
1.8 ↔ 2.5	30
1.2 ↔ 2.5	20
1.2 ↔ 1.8	20

MAX3000E/MAX3001E/MAX3002 Functional Diagram

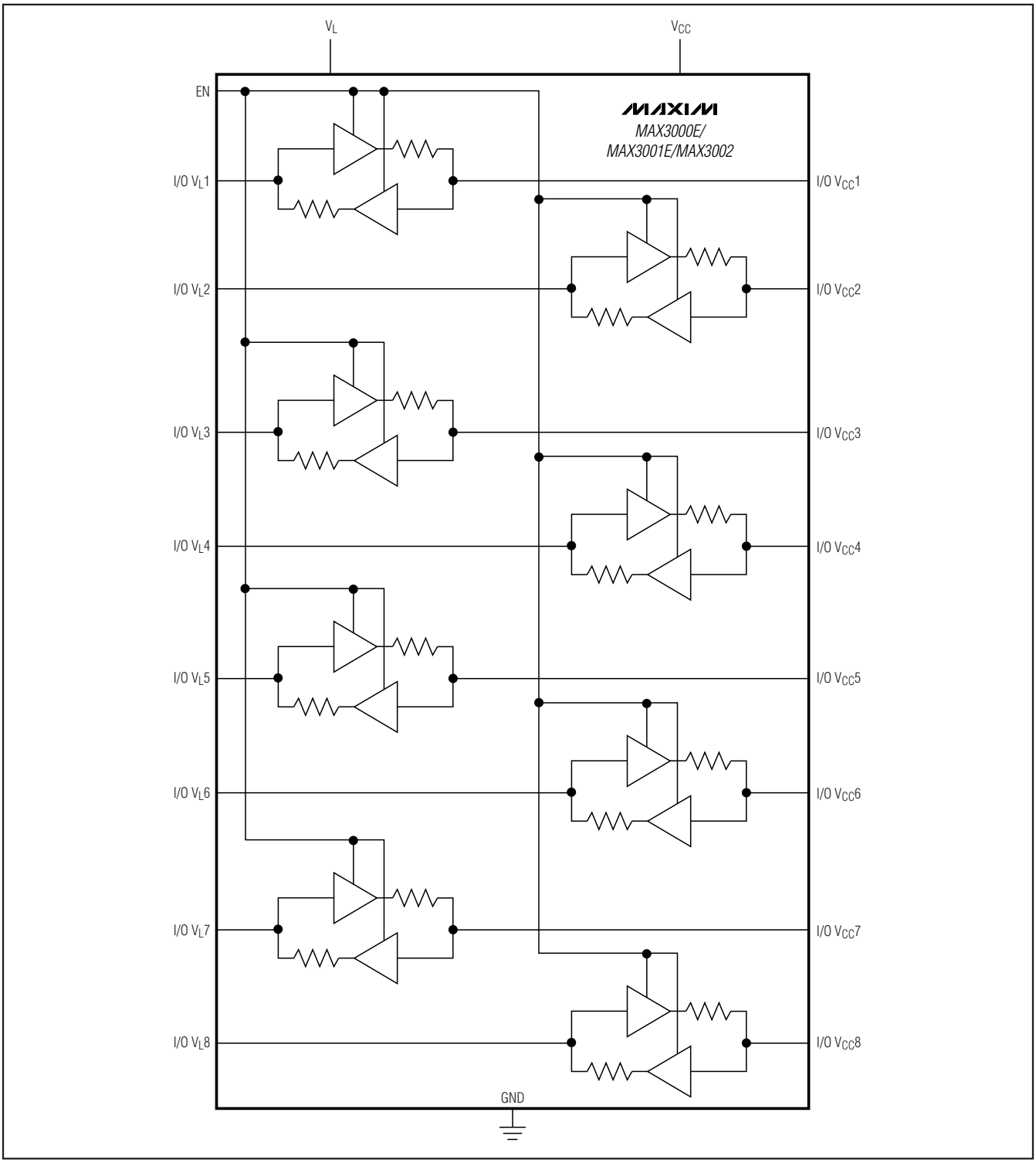

+1.2V to +5.5V, ±15kV ESD-Protected, 0.1µA, 35Mbps, 8-Channel Level Translators

MAX3003 Functional Diagram

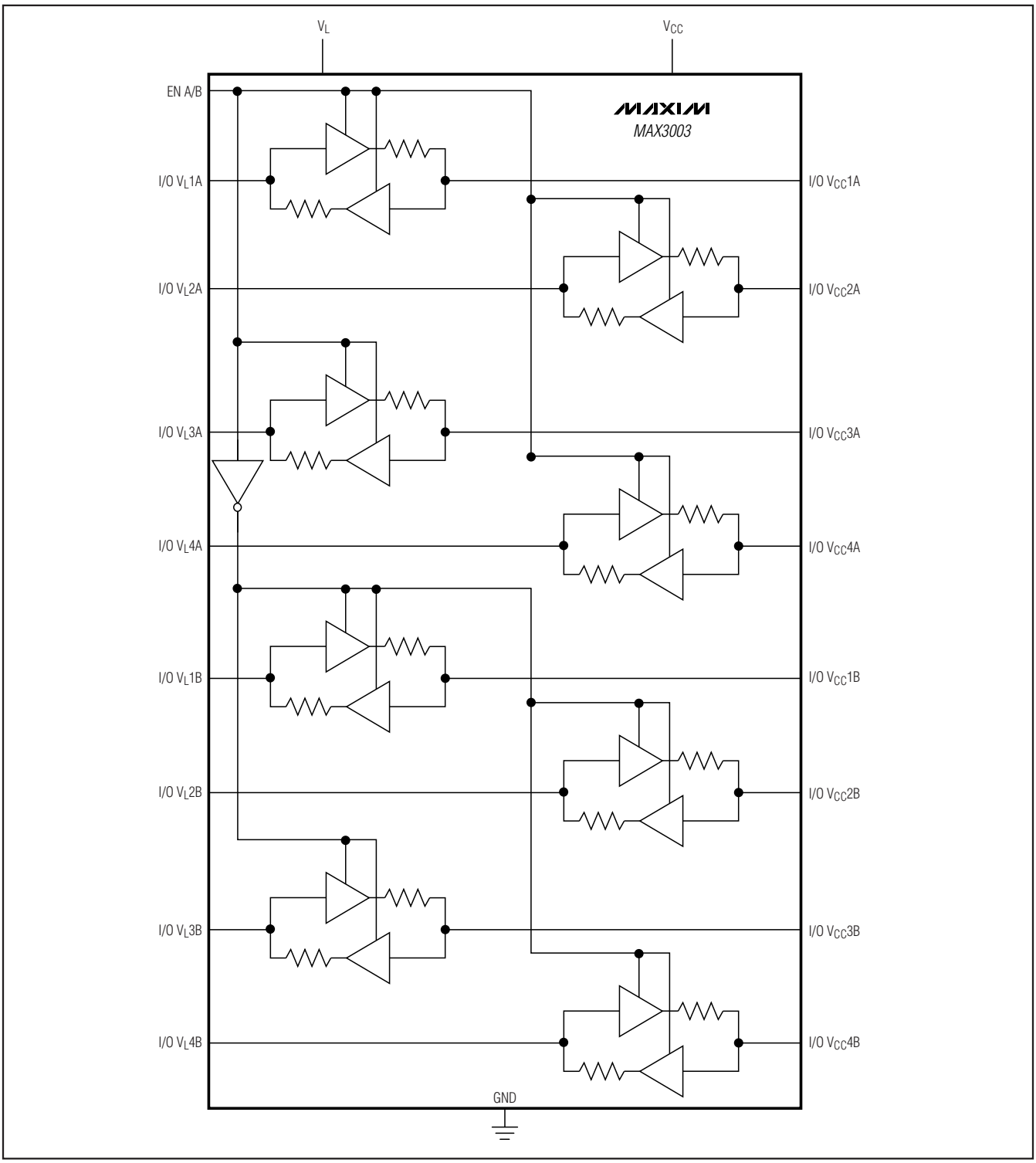

+1.2V to +5.5V, ±15kV ESD-Protected, 0.1µA, 35Mbps, 8-Channel Level Translators

Pin Configurations

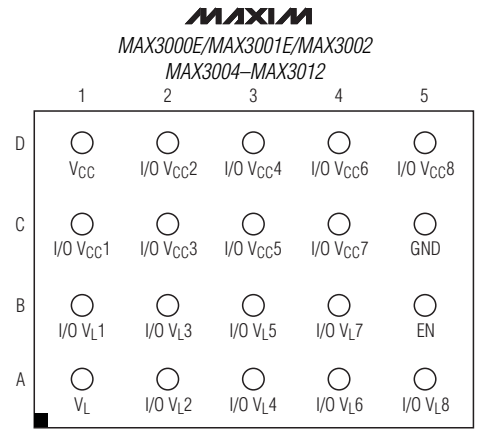

20 UCSP (Bottom View)

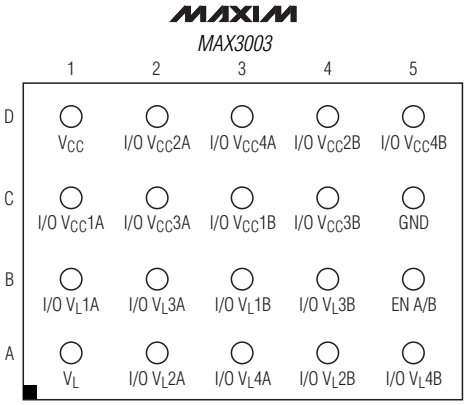

20 UCSP (Bottom View)

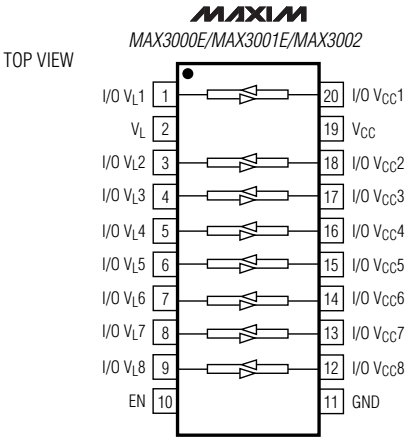

TSSOP

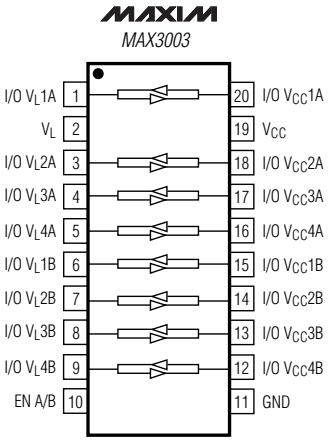

TSSOP

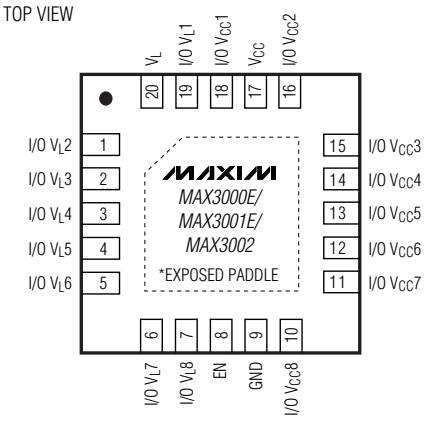

5mm × 5mm THIN QFN

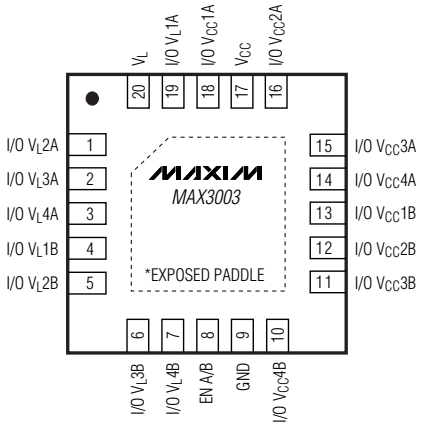

5mm × 5mm THIN QFN

+1.2V to +5.5V, ±15kV ESD-Protected, 0.1µA, 35Mbps, 8-Channel Level Translators

Pin Configurations (continued)

TOP VIEW

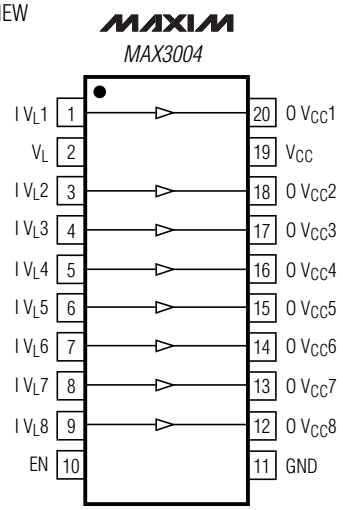

TSSOP

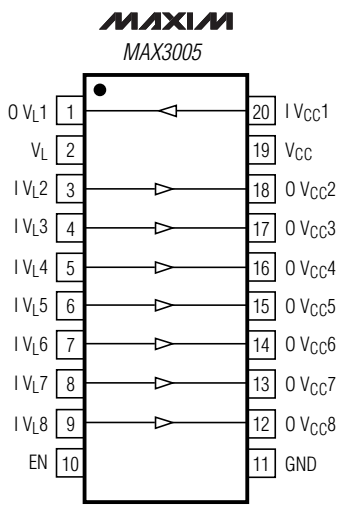

TSSOP

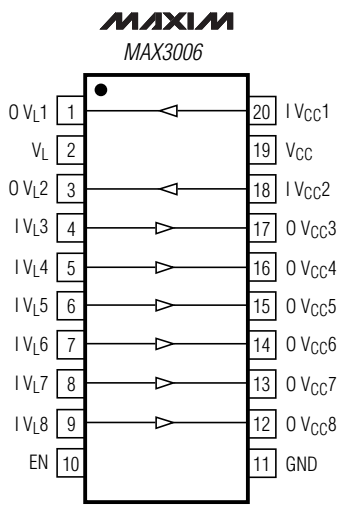

TSSOP

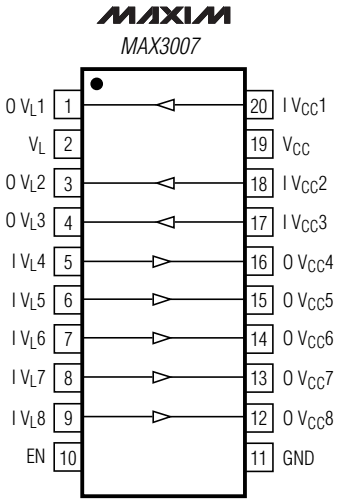

TSSOP

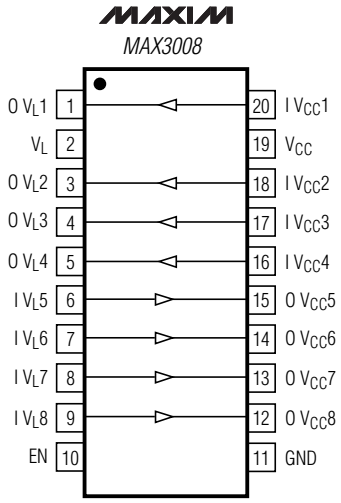

TSSOP

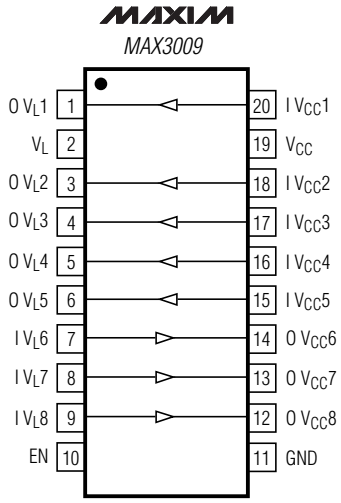

TSSOP

+1.2V to +5.5V, ±15kV ESD-Protected, 0.1µA, 35Mbps, 8-Channel Level Translators

Pin Configurations (continued)

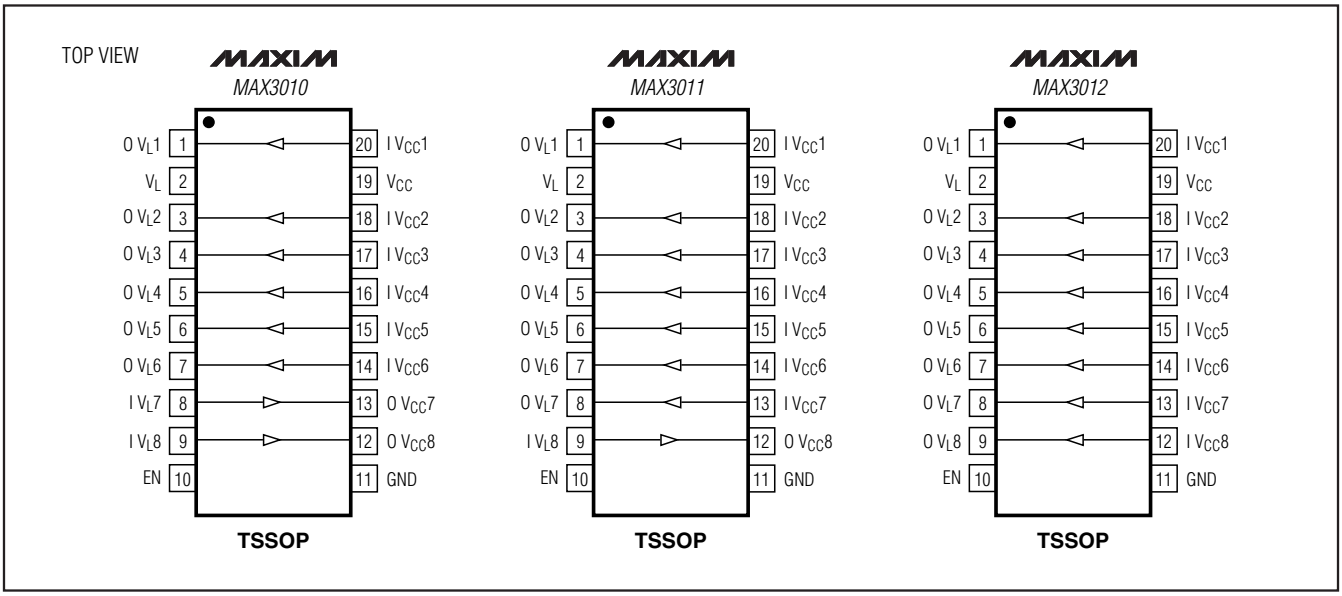

Ordering Information (continued)

PART	TEMP RANGE	PIN-PACKAGE
MAX3001EUP	-40°C to +85°C	20 TSSOP
MAX3001EEBP-T*	-40°C to +85°C	4 x 5 UCSP
MAX3001EETP	-40°C to +85°C	20 TQFN
MAX3001EAUP	-40°C to +125°C	20 TSSOP
MAX3002UP	-40°C to +85°C	20 TSSOP
MAX3002EBP-T*	-40°C to +85°C	4 x 5 UCSP
MAX3002ETP	-40°C to +85°C	20 TQFN
MAX3003UP	-40°C to +85°C	20 TSSOP
MAX3003EBP-T*	-40°C to +85°C	4 x 5 UCSP
MAX3003ETP	-40°C to +85°C	20 TQFN
MAX3004UP	-40°C to +85°C	20 TSSOP
MAX3004EBP-T*	-40°C to +85°C	4 x 5 UCSP
MAX3005UP	-40°C to +85°C	20 TSSOP
MAX3005EBP-T*	-40°C to +85°C	4 x 5 UCSP
MAX3006UP	-40°C to +85°C	20 TSSOP
MAX3006EBP-T*	-40°C to +85°C	4 x 5 UCSP

PART	TEMP RANGE	PIN-PACKAGE
MAX3007UP	-40°C to +85°C	20 TSSOP
MAX3007EBP-T*	-40°C to +85°C	4 x 5 UCSP
MAX3008UP	-40°C to +85°C	20 TSSOP
MAX3008EBP-T*	-40°C to +85°C	4 x 5 UCSP
MAX3009UP	-40°C to +85°C	20 TSSOP
MAX3009EBP-T*	-40°C to +85°C	4 x 5 UCSP
MAX3010UP	-40°C to +85°C	20 TSSOP
MAX3010EBP-T*	-40°C to +85°C	4 x 5 UCSP
MAX3011UP	-40°C to +85°C	20 TSSOP
MAX3011EBP-T*	-40°C to +85°C	4 x 5 UCSP
MAX3012UP	-40°C to +85°C	20 TSSOP
MAX3012EBP-T*	-40°C to +85°C	4 x 5 UCSP

**Future product—contact factory for availability.*
-T = Tape-and-reel package.

Chip Information

TRANSISTOR COUNT: 1184

PROCESS: BiCMOS

+1.2V to +5.5V, ±15kV ESD-Protected, 0.1µA, 35Mbps, 8-Channel Level Translators

Package Information

For the latest package outline information and land patterns, go to **www.maxim-ic.com/packages**.

PACKAGE TYPE	PACKAGE CODE	DOCUMENT NO.
20 TSSOP	U20-3	21-0066
20 TQFN	T2055-4	21-0140
4 x 5 UCSP	B20-1	21-0095

Revision History

REVISION NUMBER	REVISION DATE	DESCRIPTION	PAGES CHANGED
4	12/06	Added TQFN packages	1, 2, 3, 10, 11, 15, 16, 21, 23–26
5	8/08	Changed pin description and package drawing	1, 10, 11, 23

Maxim cannot assume responsibility for use of any circuitry other than circuitry entirely embodied in a Maxim product. No circuit patent licenses are implied. Maxim reserves the right to change the circuitry and specifications without notice at any time.

© 2008 Maxim Integrated Products MAXIM is a registered trademark of Maxim Integrated Products.

Мы молодая и активно развивающаяся компания в области поставок электронных компонентов. Мы поставляем электронные компоненты отечественного и импортного производства напрямую от производителей и с крупнейших складов мира.

Благодаря сотрудничеству с мировыми поставщиками мы осуществляем комплексные и плановые поставки широчайшего спектра электронных компонентов.

Собственная эффективная логистика и склад в обеспечивает надежную поставку продукции в точно указанные сроки по всей России.

Мы осуществляем техническую поддержку нашим клиентам и предпродажную проверку качества продукции. На все поставляемые продукты мы предоставляем гарантию .

Осуществляем поставки продукции под контролем ВП МО РФ на предприятия военно-промышленного комплекса России , а также работаем в рамках 275 ФЗ с открытием отдельных счетов в уполномоченном банке. Система менеджмента качества компании соответствует требованиям ГОСТ ISO 9001.

Минимальные сроки поставки, гибкие цены, неограниченный ассортимент и индивидуальный подход к клиентам являются основой для выстраивания долгосрочного и эффективного сотрудничества с предприятиями радиоэлектронной промышленности, предприятиями ВПК и научно-исследовательскими институтами России.

С нами вы становитесь еще успешнее!

Наши контакты:

Телефон: +7 812 627 14 35

Электронная почта: sales@st-electron.ru

Адрес: 198099, Санкт-Петербург, Промышленная ул, дом № 19, литера Н, помещение 100-Н Офис 331