MLX75305

Light-to-Voltage SensorEyeC

Features and Benefits

- ❑ Converts light intensity to voltage
- ❑ High linearity
- ❑ Low temperature dependency
- ❑ Supply voltage range 3V to 5.5V
- ❑ Open drain output voltage output
- ❑ Automotive Cavity SO8 package
- ❑ Designed for automotive applications
- ❑ Solder reflow 260degC, MSL3
- ❑ Automotive qualified AEC-Q100 Grade 1
- ❑ Operating temperature -40 up to 125degC
- ❑ RoHS compliant lead-free

Applications

General

- Ambient Light Sensor
- LCD Backlight Sensor
- LED Power Monitoring

Automotive

- Automatic light dimming of instrument panels and displays
- Electrochrome Dimming
- Headlights on/off control

Printers/Copiers

- Paper feed detection
- Paper size and orientation detection
- Toner cartridge presence detection

Ordering Code

Product Code	Temperature Code	Package Code	Option Code	Packing Form Code
MLX75305	E	XD	AAA-000	RE
MLX75305	E	XD	ABA-000	RE
MLX75305	E	XD	AAB-000	RE
MLX75305	E	XD	ABB-000	RE
MLX75305	S	XE	AAA-000	RE
MLX75305	S	XE	ABA-000	RE
MLX75305	S	XE	AAB-000	RE
MLX75305	S	XE	ABB-000	RE
MLX75305	K	XD	AAA-000	RE
MLX75305	K	XD	ABA-000	RE
MLX75305	K	XD	AAB-000	RE
MLX75305	K	XD	ABB-000	RE

Legend:

Temperature Code:	E for Temperature Range -40°C to 85°C
	S for Temperature Range -20°C to 85°C
	K for Temperature Range -40°C to 125°C
Package Code:	XD for SOIC8
	XE for DFN
Option Code:	AAA-xxx: Responsivity Gain10 without NIR reject filter
	ABA-xxx: Responsivity Gain1 without NIR reject filter
	AAB-xxx: Responsivity Gain10 with NIR reject filter
	ABB-xxx: Responsivity Gain1 with NIR reject filter
	xxx-000: Standard version
Packing Form:	RE for Reel

Ordering example: **MLX75305EXD-AAA-000-RE**

1 Functional Diagram

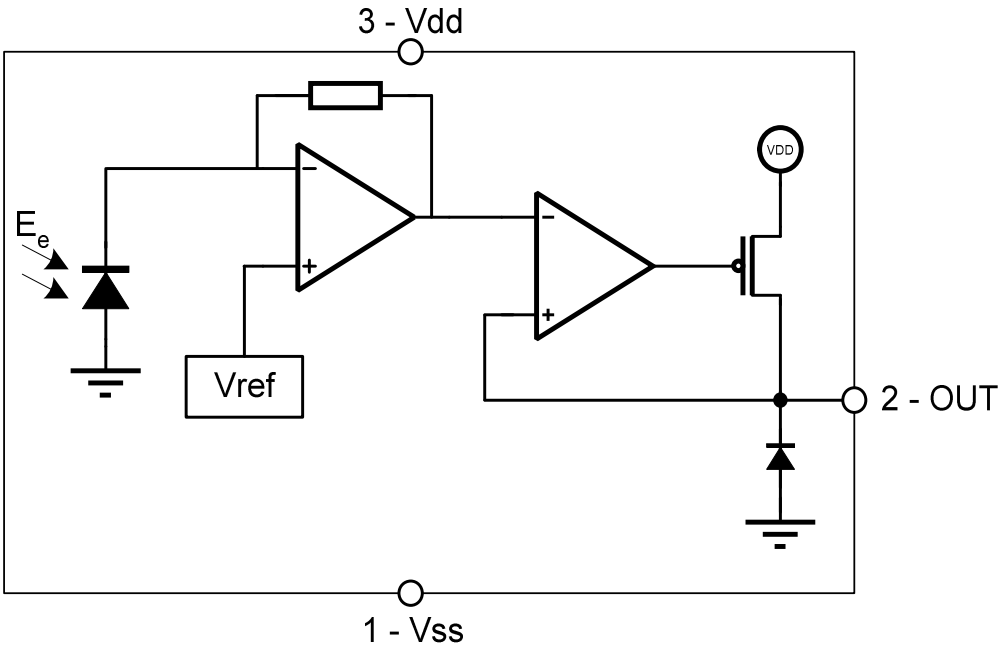

2 General Description

The Melexis SensorEyeC series are CMOS integrated optical sensor ICs including photodiode, transimpedance amplifier and output transistor on one chip. These sensors are designed for high-volume automotive and non-automotive applications.

The MLX75305 Light-to-Voltage SensorEyeC converts ambient or LED light intensity into an output voltage.

The MLX75305 block diagram is shown in Section 1 and contains following blocks: a photodiode, a transimpedance amplifier to convert and amplify the photocurrent of the photodiode and an open drain output buffer stage.

Table of Contents

1 Functional Diagram 3
2 General Description 3
3 Pin Definitions and Descriptions SO8 5
4 Absolute Maximum Ratings 5
5 MLX75305 Specifications 6
6 Spectral Responsivity and Linear Optical Response Curve 7
7 Timing diagrams 8
8 Applications Information 8
9 SO8 Open Cavity Package Information 10
10 Standard information regarding manufacturability of Melexis products with different soldering processes 11
11 ESD Precautions 11
12 Disclaimer 12

3 Pin Definitions and Descriptions SO8

Pin Number	Pin Name	Description	Type
1	Vss	Ground connection	Ground
2	OUT	Analog output	Open drain output
3	Vdd	Power supply	Supply
4	N.C.	Not connected	Floating
5..8	N.C.	Not connected	Floating

4 Absolute Maximum Ratings

Valid for all MLX75305 versions. All voltages are referenced to Vss.

Symbol	Rating	Value	Unit
Vdd	Supply Voltage, V_{DD} (over voltage)	-0.3 to 7	V
V_{out}	DC Output Voltage	-0.3 to Vdd+0.3	V
I_{out}	DC Output Current, per Pin	±20	mA
T_{Stg}	Storage Temperature Range, T_S	-40 to 125	°C
$V_{ESD\text{-}HBM}$	ESD Sensitivity (Human Body Model according to CDF-AEC-Q100)	4	kV
$V_{ESD\text{-}MM}$	ESD Sensitivity (Machine Model according to CDF-AEC-Q100)	200	V

Exceeding the absolute maximum ratings may cause permanent damage. Exposure to absolute-maximum-rated conditions for extended periods may affect device reliability.

5 MLX75305 Specifications

All voltages are referenced to Vss.

Symbol	Parameter	Conditions	Min	Typ	Max	Units	Test[1]
Vdd	Supply Voltage		3		5.5	V	V
Idd	Static Power Supply Current	At Vdd=5.5V, unloaded output			2	mA	V
Vdark	Dark level	(a), (c) Ee=0 T_{amb}=-40 .. 85˚C T_{amb}=85 .. 125˚C			160 210	mV mV	V V
Re10	Responsivity Gain 10 (option code A)	(a), Vout range = 50mV..4.5V, 25˚C	-15%	70mV/(uW/cm2)	+15 %	mV/(µW/cm^2)	V
Re1	Responsivity Gain 1 (option code B)			7mV/(uW/cm2)			
NLAO	RMS Non Linearity	(a), in the 10..90% Output Range			+/-2	%	V
TC	Temperature Coefficient	(b), Ee=46µW/cm² For visual light: For NIR (λ=850nm):		-0.16 0.06		%/C %/C	X X
$\lambda_{0.3}$	Spectral Bandwidth	T_{amb}=25˚C	500		1000	nm	X
E_{max}	Absolute Maximum Irradiance	Vdd=5V, λ=850nm, T_{amb}=25˚C		50*E_{Vout}		µW/cm^2	X
S_{pd}	Area of photodiode			0.36		mm^2	D
V_{OH}	Maximum Output voltage high	(a), E_e=15*E_{Vout}...E_{max}	4.9	4.95		V	V
t_{Vdd_rise}	Vdd rise time	10..90% of Vdd		4		µs	V
t_{setup}	Electrical setup-time	(a), Vout within Vdd/2 +/- 5%		70	140	µs	V
t_{on}	Turn-on time	(a), Vout > V_{OH_min}		6	50	µs	V
t_{off}	Turn-off time	(a), Vout > V_{OH_min}		6	50	µs	V
t_r	Rise time	(a), Vout > V_{OH_min}		10	22	µs	V
t_f	Fall time	(a), Vout > V_{OH_min}		10	22	µs	V
T_A	Operating Temperature Range	Temperature Code S Temperature Code K	-20 -40		85 125	℃ ℃	V V

(a) Vdd=5V, R_L=10kOhm, C_L=50pF, λ= 850nm
(b) Vdd=5V, R_L=10kOhm, C_L=50pF

[1] The column *Test* indicates if the specific parameter is tested in production. Following symbols are used:
V: the specific parameter is tested in production
X: the specific parameter is verified in characterisation, but is not tested in production (e.g. timings and capacitances)
D: the specific parameter is guaranteed by design and is not tested as such in production

(c) The dark level is ratio metric with the Vdd power supply voltage

6 Spectral Responsivity and Linear Optical Response Curve

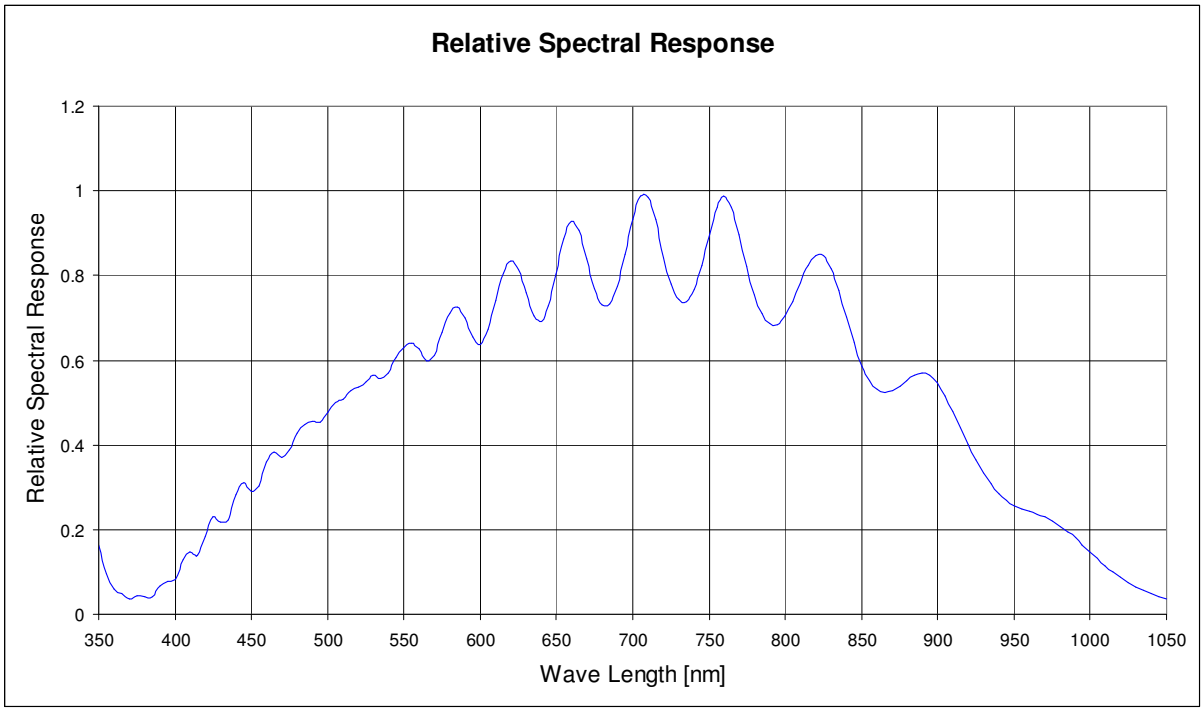

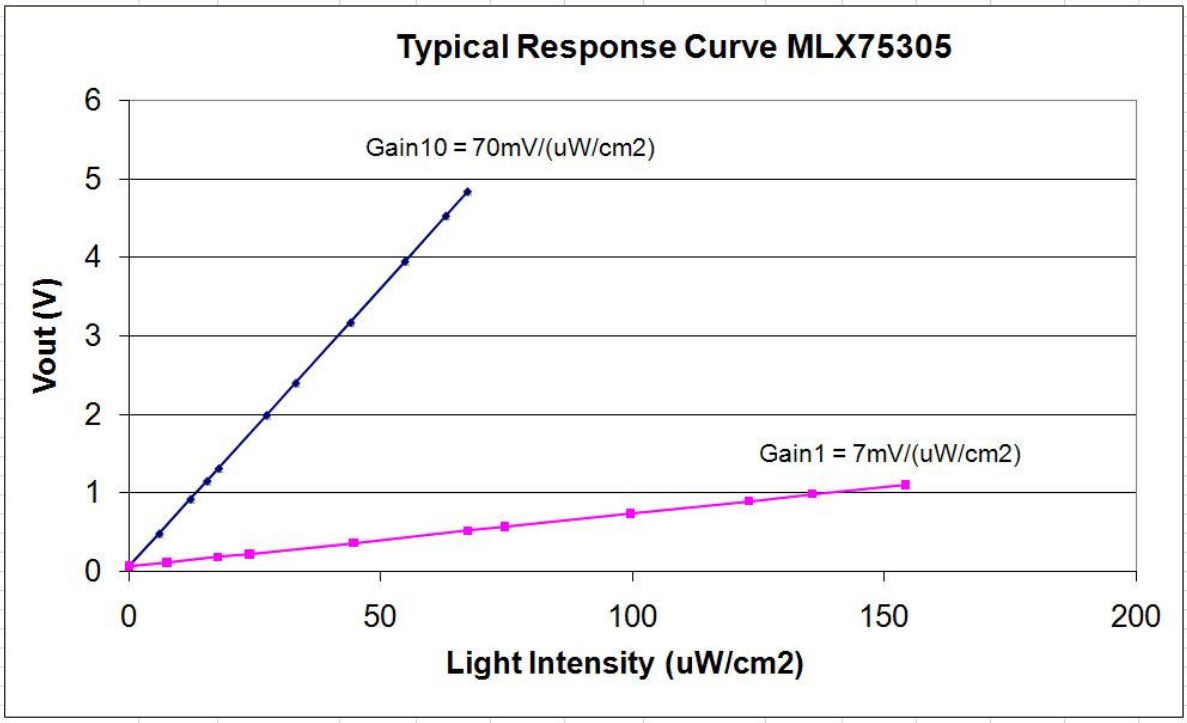

7 Timing diagrams

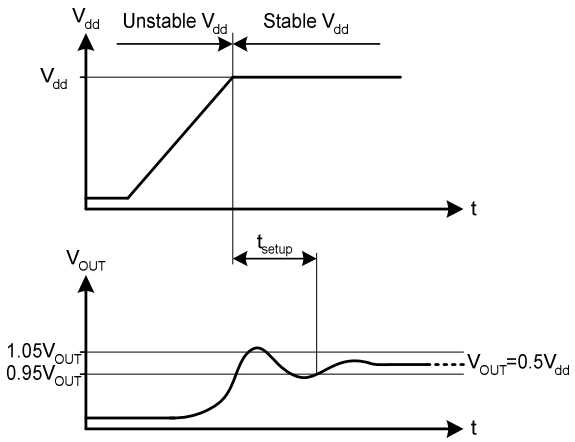

Definition of the electrical setup-time

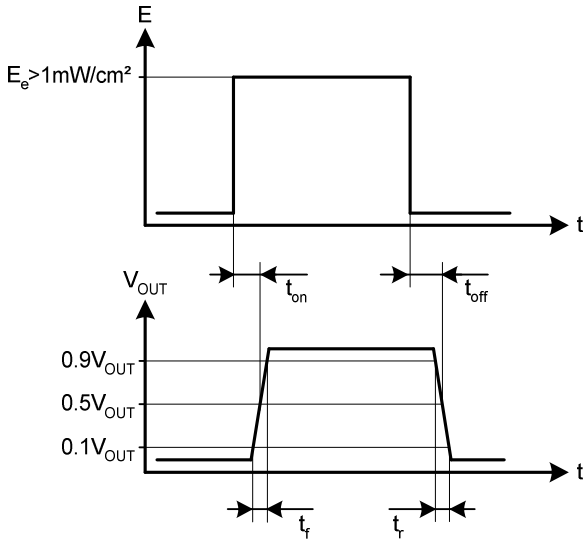

Definition of the rise and fall times

8 Applications Information

A typical connection diagram is shown in the figure below. A load resistor R_L is needed to get the voltage level out. The load capacitance C_L is typically formed by the input capacitance of the component that is connected to the sensor output, the wiring capacitance and the output capacitance of the sensor itself.

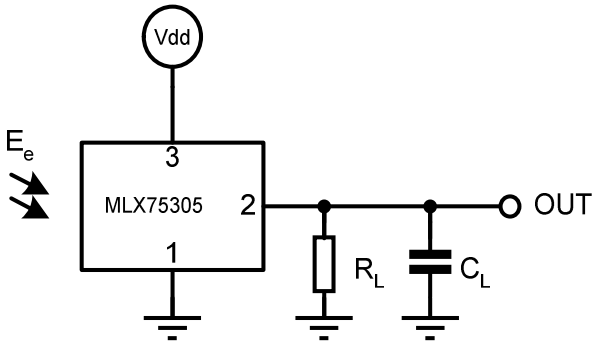

Decoupling capacitors between *Vdd* and *Vss* (1uF in parallel with 100nF) are highly recommended in all configurations.

Recommendation: every change in the application should be agreed by both parties.

9 SO8 Open Cavity Package Information

SO8 open cavity package, MSL3, 260˚C soldering profile.

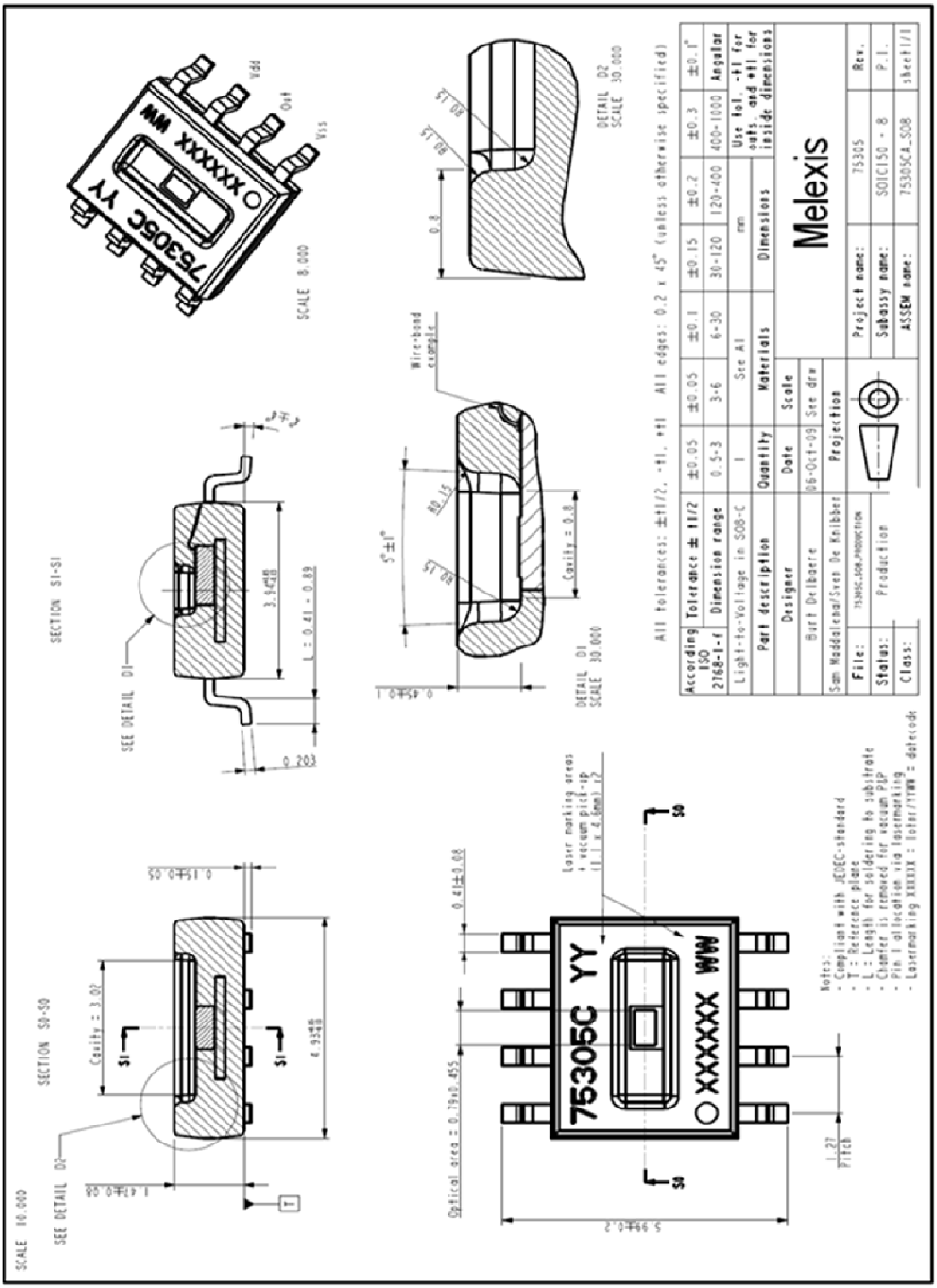

10 Standard information regarding manufacturability of Melexis products with different soldering processes

Our products are classified and qualified regarding soldering technology, solderability and moisture sensitivity level according to following test methods:

Reflow Soldering SMD's (Surface Mount Devices)

- IPC/JEDEC J-STD-020
  Moisture/Reflow Sensitivity Classification for Nonhermetic Solid State Surface Mount Devices
  (classification reflow profiles according to table 5-2)
- EIA/JEDEC JESD22-A113
  Preconditioning of Nonhermetic Surface Mount Devices Prior to Reliability Testing
  (reflow profiles according to table 2)

Wave Soldering SMD's (Surface Mount Devices) and THD's (Through Hole Devices)

- EN60749-20
  Resistance of plastic- encapsulated SMD's to combined effect of moisture and soldering heat
- EIA/JEDEC JESD22-B106 and EN60749-15
  Resistance to soldering temperature for through-hole mounted devices

Iron Soldering THD's (Through Hole Devices)

- EN60749-15
  Resistance to soldering temperature for through-hole mounted devices

Solderability SMD's (Surface Mount Devices) and THD's (Through Hole Devices)

- EIA/JEDEC JESD22-B102 and EN60749-21
  Solderability

For all soldering technologies deviating from above mentioned standard conditions (regarding peak temperature, temperature gradient, temperature profile etc) additional classification and qualification tests have to be agreed upon with Melexis.

The application of Wave Soldering for SMD's is allowed only after consulting Melexis regarding assurance of adhesive strength between device and board.

Melexis recommends reviewing on our web site the General Guidelines soldering recommendation (http://www.melexis.com/Quality_soldering.aspx) as well as trim&form recommendations (http://www.melexis.com/Assets/Trim-and-form-recommendations-5565.aspx).

Melexis is contributing to global environmental conservation by promoting **lead free** solutions. For more information on qualifications of **RoHS** compliant products (RoHS = European directive on the Restriction Of the use of certain Hazardous Substances) please visit the quality page on our website: http://www.melexis.com/quality.aspx

11 ESD Precautions

Electronic semiconductor products are sensitive to Electro Static Discharge (ESD).
Always observe Electro Static Discharge control procedures whenever handling semiconductor products.

12 Disclaimer

Devices sold by Melexis are covered by the warranty and patent indemnification provisions appearing in its Term of Sale. Melexis makes no warranty, express, statutory, implied, or by description regarding the information set forth herein or regarding the freedom of the described devices from patent infringement. Melexis reserves the right to change specifications and prices at any time and without notice. Therefore, prior to designing this product into a system, it is necessary to check with Melexis for current information. This product is intended for use in normal commercial applications. Applications requiring extended temperature range, unusual environmental requirements, or high reliability applications, such as military, medical life-support or life-sustaining equipment are specifically not recommended without additional processing by Melexis for each application.

The information furnished by Melexis is believed to be correct and accurate. However, Melexis shall not be liable to recipient or any third party for any damages, including but not limited to personal injury, property damage, loss of profits, loss of use, interrupt of business or indirect, special incidental or consequential damages, of any kind, in connection with or arising out of the furnishing, performance or use of the technical data herein. No obligation or liability to recipient or any third party shall arise or flow out of Melexis' rendering of technical or other services.

© 2012 Melexis NV. All rights reserved.

For the latest version of this document, go to our website at
www.melexis.com

Or for additional information contact Melexis Direct:

Europe, Africa, Asia:
Phone: +32 1367 0495
E-mail: sales_europe@melexis.com

America:
Phone: +1 248 306 5400
E-mail: sales_usa@melexis.com

ISO/TS 16949 and ISO14001 Certified

Мы молодая и активно развивающаяся компания в области поставок электронных компонентов. Мы поставляем электронные компоненты отечественного и импортного производства напрямую от производителей и с крупнейших складов мира.

Благодаря сотрудничеству с мировыми поставщиками мы осуществляем комплексные и плановые поставки широчайшего спектра электронных компонентов.

Собственная эффективная логистика и склад в обеспечивает надежную поставку продукции в точно указанные сроки по всей России.

Мы осуществляем техническую поддержку нашим клиентам и предпродажную проверку качества продукции. На все поставляемые продукты мы предоставляем гарантию .

Осуществляем поставки продукции под контролем ВП МО РФ на предприятия военно-промышленного комплекса России , а также работаем в рамках 275 ФЗ с открытием отдельных счетов в уполномоченном банке. Система менеджмента качества компании соответствует требованиям ГОСТ ISO 9001.

Минимальные сроки поставки, гибкие цены, неограниченный ассортимент и индивидуальный подход к клиентам являются основой для выстраивания долгосрочного и эффективного сотрудничества с предприятиями радиоэлектронной промышленности, предприятиями ВПК и научно-исследовательскими институтами России.

С нами вы становитесь еще успешнее!

Наши контакты:

Телефон: +7 812 627 14 35

Электронная почта: sales@st-electron.ru

Адрес: 198099, Санкт-Петербург, Промышленная ул, дом № 19, литера Н, помещение 100-Н Офис 331