SIDE ROTARY

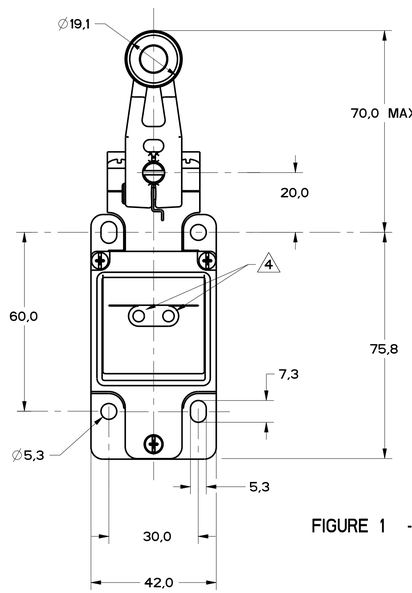

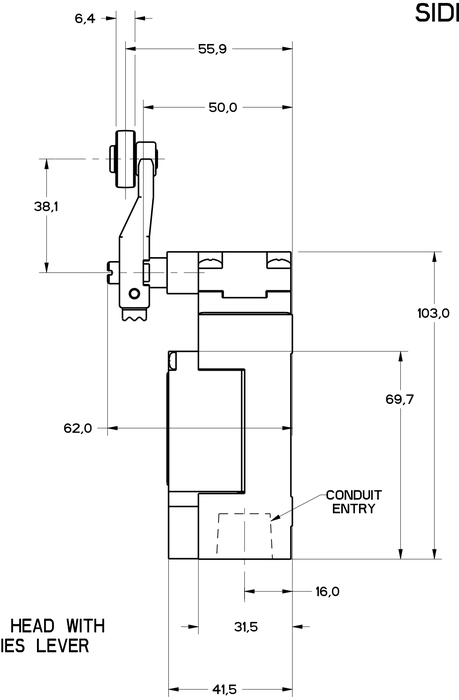

FIGURE 1 - SIDE ROTARY HEAD WITH GLZ51 SERIES LEVER

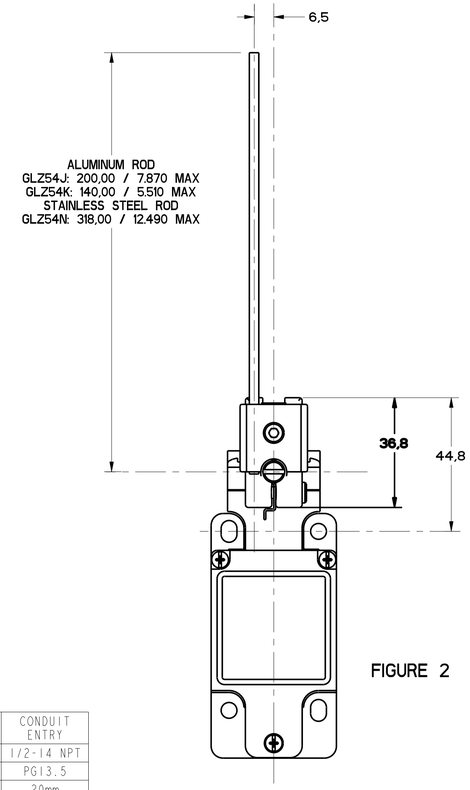

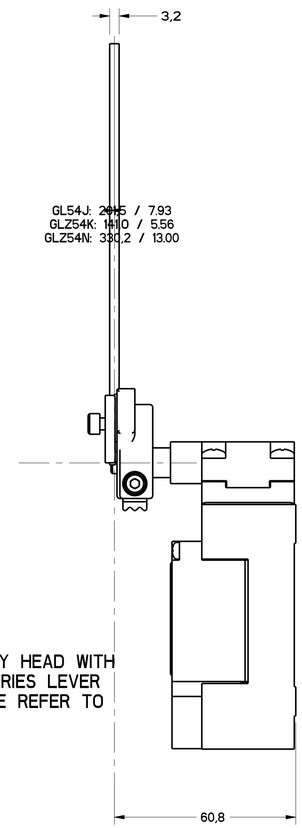

FIGURE 2 - SIDE ROTARY HEAD WITH GLZ54 SERIES LEVER OTHERWISE REFER TO FIGURE 1

FIGURE	CATALOG LISTING	CONDUIT ENTRY
1A	GL*A SERIES	1/2-14 NPT
1B	GL*B SERIES	PG13.5
1C	GL*C SERIES	20mm
1D	GL*D SERIES	PF1/2

ELECTRICAL RATING 5			
AC		DC	
A600 Ue	AC15 Ie	Q300 Ue	DC13 Ie
(VOLTS)	(AMPS)	(VOLTS)	(AMPS)
120	6	24	2.8
240	3	125	.55
380	1.9	250	.27
480	1.5		
500	1.4		
600	1.2		

ENVIRONMENTAL RATING
IP67 NEMA/UL TYPES 1, 4, 12, 13

CATALOG LISTING	BODY DIMENSIONS, FIGURE	HEAD DIMENSIONS, FIGURE	HEAD ACTUATION, FIGURE
GLB****	1	N/A	N/A
GLG****	1	N/A	N/A
GLJ****	1	N/A	N/A
GL*A***	1A	N/A	N/A
GL*B***	1B	N/A	N/A
GL*C***	1C	N/A	N/A
GL*D***	1D	N/A	N/A
GL****A1*	1	1	8
GL****A2*	1	3	9
GL****A4*	1	2	10
GL****A5*	1		8
GL****B	1	4	11
GL****C	1	5	13A, 13B
GL****D	1	6	14A, 14B
GL****E7A	1	7A	12
GL****E7B	1	7	12
GL****E7C	1	7E	12
GL****E7D	1	7B	12
GL****K8A	1	7C	15
GL****K8B	1	7D	15
GL****K8C	1	7	15

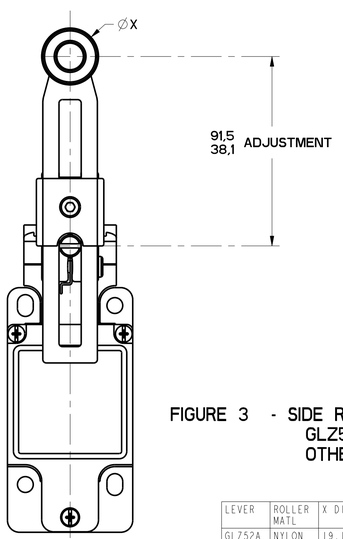

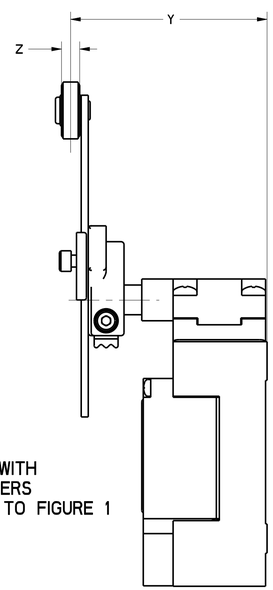

FIGURE 3 - SIDE ROTARY HEAD WITH GLZ52 SERIES LEVERS OTHERWISE REFER TO FIGURE 1

LEVER	ROLLER MATL	X DIM	Y DIM	Z DIM
GLZ52A	NYLON	19,1 .75	65,9 2.59	6,4 .25
GLZ52B	STEEL	19,1 .75	65,9 2.59	6,4 .25
GLZ52D	NYLON	38,1 1.5	65,9 2.59	6,4 .25
GLZ52E	NYLON	19,1 .75	79,37 3.125	33,07 1.300
GLZ52W	RUBBER	40,0 1.5	71,5 2.81	12,7 .5
GLZ52Y	RUBBER	50,9 2.0	71,5 2.81	12,7 .5

NOTES
1 - HEADS MAY BE INDEXED IN 90° INCREMENTS
2 - LEVERS MAY BE KEYED TO THE SHAFT AT 90° INCREMENTS. THEY MAY ALSO BE ATTACHED, BUT NOT KEYED ANYWHERE ON THE SHAFT.
3 - FOR ADDITIONAL LEVERS SEE "M" DRAWING CHART GLZ5
4 THE RIGHT INDICATOR IS YELLOW AND INDICATES "OUTPUT STATUS" IT IS ON GLG SERIES PRODUCTS ONLY.
5 THE MAXIMUM VOLTAGE, Ve OF GLG SERIES PRODUCTS IS THE MAXIMUM RATED VOLTAGE OF INDICATION LIGHTS
6 FREE POSITION, OPERATE POINT, OVERTRAVEL AND PRETRAVEL ALL TO EN50041
7 CAM TRAVEL FOR FIG 9 ONLY APPLIES WHEN LEVER IS ADJUSTED TO 38,1 / 1.50
8 TEMPERATURE RANGE
(ALL PRODUCTS EXCEPT w/SIDE ROTARY OPERATING HEAD)
OPERATING: -25°C TO +85°C / -13°F TO +185°F
STORAGE: -40°C TO +85°C / -40°F TO +185°F
(PRODUCTS w/SIDE ROTARY OPERATING HEAD)
OPERATING: -40°C TO +85°C / -40°F TO +185°F
STORAGE: -40°C TO +85°C / -40°F TO +185°F

ANSI Y14.5M-1982 APPLIES

THIS DRAWING COVERS A PROPRIETARY ITEM AND IS THE PROPERTY OF MICRO SWITCH, A DIVISION OF HONEYWELL. THIS DRAWING IS NOT TO BE COPIED OR USED WITHOUT THE APPROVAL OF MICRO SWITCH.

FED. MFG. CODE 91929
MICRO SWITCH a Honeywell Division

SWITCH, ENCLOSED

CATALOG LISTING
GL SERIES CHART 2

THIRD ANGLE PROJECTION
SCALE FULL
DO NOT SCALE PRINT

TOLERANCES
APPLY TO DESIGN UNITS. CONVERSIONS ARE ONLY FOR REFERENCE. UNLESS NOTED, TOLERANCES ARE ±

	DIM. mm	TOL. mm/in	DIM. in	TOL. mm/in
NO PLACES	X	1/.04	X.X	0.8/.03
ONE PLACE	X.X	0.4/.016	X.XX	0.38/.015
TWO PLACES	X.XX	0.15/.006	X.XXX	0.13/.005
THREE PLACES				
ANGLES		±2°		

SI METRIC ☒ US CUSTOMARY ☐

DESIGN UNITS
WEIGHT

M GL SERIES CHART 2 | PAGE 1 OF 8 | RELEASE NO. PR-20782 | REPLACES
DRAWING NUMBER 11 | ISSUE | CHECK MDM
REVISIONS
A PR-21603 S A V 28 MARCH 96
B PR-21578 S A V 2 APRIL 96
C PR-21557 SAV 1 MAY 96
D PR-22833 GLW 5 JUL 97
E CO-93789 KED 4NOV98
F 0000401 GLW 9JUN03
G 0002986 JK 20JAN04
H 0017532 LDD 02DEC05
CHECK RJ 02DEC05
DRAWN S A V 28MAR96 PTC/CAD

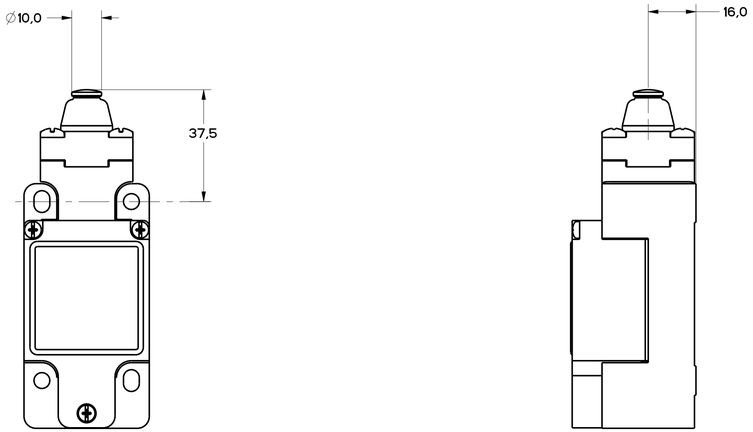

FIGURE 4 - TOP PIN PLUNGER HEAD OTHERWISE REFER TO FIGURE 1

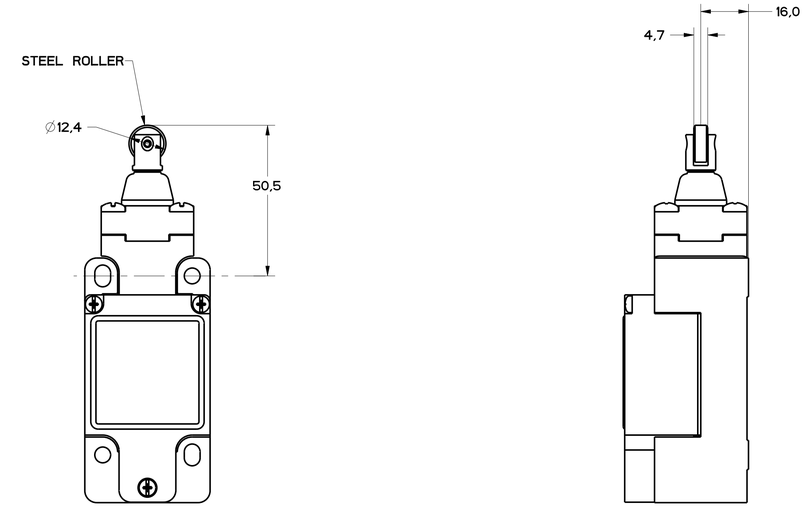

FIGURE 5 - TOP ROLLER PLUNGER HEAD OTHERWISE REFER TO FIGURE 1

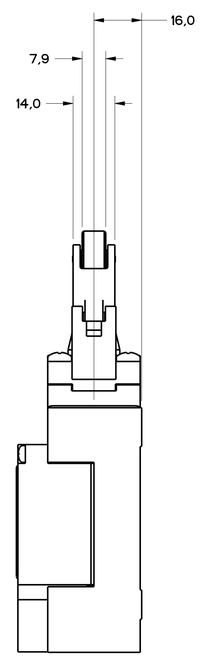

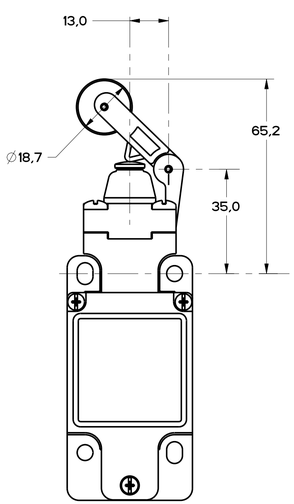

FIGURE 6 - TOP LEVER HEAD, OTHERWISE REFER TO FIGURE 1

ANSI Y14.5M-1982 APPLIES

THIS DRAWING COVERS A PROPRIETARY ITEM AND IS THE PROPERTY OF MICRO SWITCH, A DIVISION OF HONEYWELL. THIS DRAWING IS NOT TO BE COPIED OR USED WITHOUT THE APPROVAL OF MICRO SWITCH.

FED. MFG. CODE 91929

MICRO SWITCH a Honeywell Division

SWITCH, ENCLOSED

CATALOG LISTING

GL SERIES CHART 2

THIRD ANGLE PROJECTION

SCALE FULL

DO NOT SCALE PRINT

TOLERANCES

APPLY TO DESIGN UNITS. CONVERSIONS ARE ONLY FOR REFERENCE. UNLESS NOTED, TOLERANCES ARE ±

	DIM mm	TOL mm±	DIM in	TOL in±
NO PLACES	X.	1/128	X.	0.01/.03
ONE PLACE	X.X	0.5/.016	X.X	0.01/.015
TWO PLACES	X.XX	0.13/.005	X.XX	0.13/.005
THREE PLACES			X.XXX	
ANGLES		±2°		

SI METRIC ☒ US CUSTOMARY ☐

DESIGN UNITS

WEIGHT

PTC/CAD

DRAWN	WLS	10DEC93	
CHECK		10DEC93	
CHECK		GLH	10DEC93
CHECK			
CHECK		RJ	02DEC05
CHECK		MDM	

REVISIONS

A	CO-93789 KED 8NOV94	
B	0000491 GLH 4JUN93	
C	0002986 RS 13JAN14	
D	0017532 TSG 02DEC05	

ISSUE 11

DRAWING NUMBER

M GL SERIES CHART 2

PAGE 1 OF 8

RELEASE NO. PR-20782

REPLACES

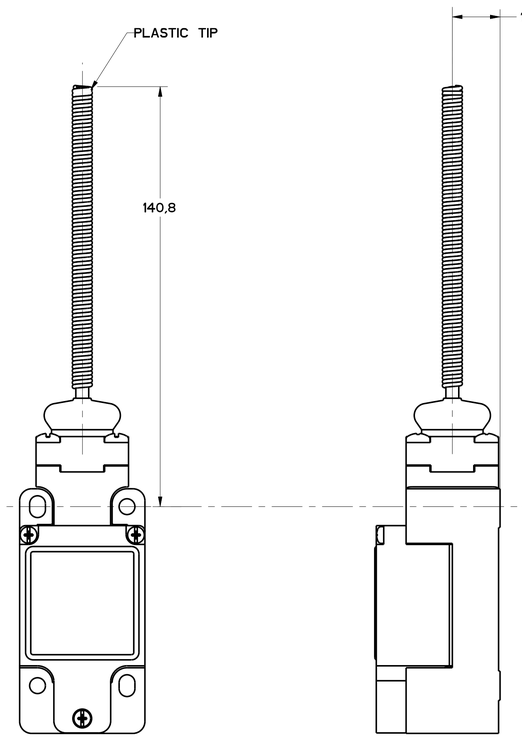

FIGURE 7 - WOBBLE HEAD, AND CAT WHISKER HEAD COIL ACTUATOR, OTHERWISE REFER TO FIGURE 1

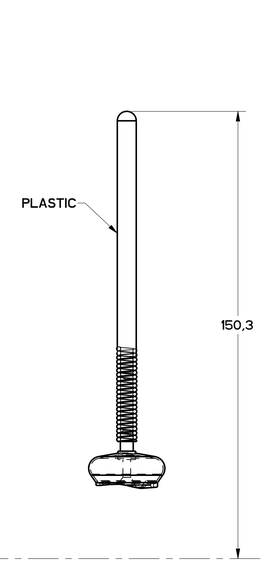

FIGURE 7A - WOBBLE HEAD, PLASTIC ACTUATOR, OTHERWISE SAME AS FIGURE 7

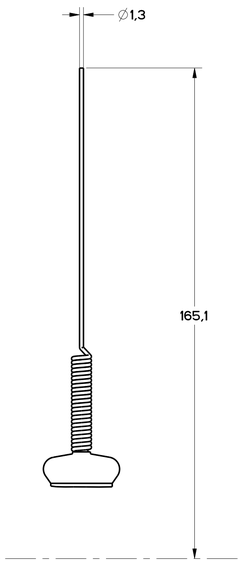

FIGURE 7B - WOBBLE HEAD STAINLESS STEEL SPRING ACTUATOR, OTHERWISE SAME AS FIGURE 7

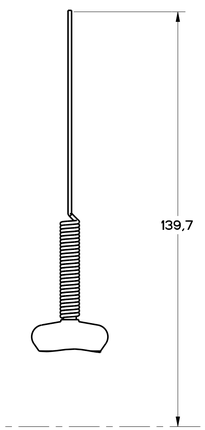

FIGURE 7C - CAT WHISKER ACTUATOR STAINLESS STEEL SPRING OTHERWISE SAME AS FIGURE 7

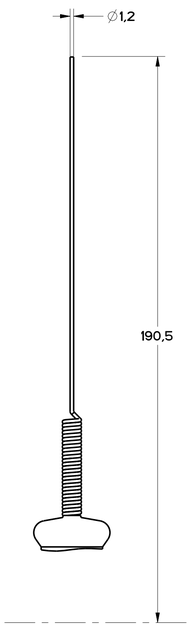

FIGURE 7D - CAT WHISKER ACTUATOR, STAINLESS STEEL SPRING, OTHERWISE SAME AS FIGURE 7

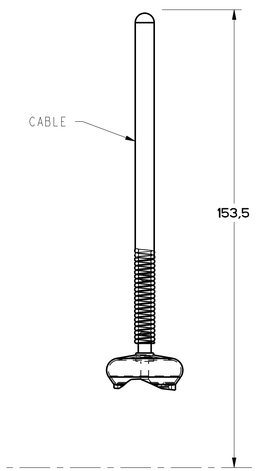

FIGURE 7E - CABLE WOBBLE ACTUATOR OTHERWISE SAME AS FIGURE 7

M GL SERIES CHART 2 | PAGE 3 OF 8 | RELEASE NO. PR-21557 | REPLACES
DRAWING NUMBER | ISSUE 11 | CHECK MDM

REVISIONS

A	PR-21557 SAY 7 MAY 96		02DEC05
B	CO-93289 RED 4NOV96		
C	0000481 GLW 4JUN03		RJ
D	0002986 RS 20JAN04	CHECK	
E	00017532 TSP 02DEC05		

PTC/CAD | DRAWN S A V 7 MAY 96 | CHECK S A V 7 MAY 96

ANSI Y14.5M-1982 APPLIES

THIS DRAWING COVERS A PROPRIETARY ITEM AND IS THE PROPERTY OF MICRO SWITCH, A DIVISION OF HONEYWELL. THIS DRAWING IS NOT TO BE COPIED OR USED WITHOUT THE APPROVAL OF MICRO SWITCH.

FED. MFG. CODE 91929
MICRO SWITCH a Honeywell Division

SWITCH, ENCLOSED

CATALOG LISTING
GL SERIES CHART 2

THIRD ANGLE PROJECTION

SCALE FULL

DO NOT SCALE PRINT

TOLERANCES
APPLY TO DESIGN UNITS. CONVERSIONS ARE ONLY FOR REFERENCE. UNLESS NOTED, TOLERANCES ARE ±

	DIM mm	TOL mm	DIM in	TOL inch
NO PLACES	X	X/10	X	X/32
ONE PLACE	X.X	X.X/10	X.X	X.X/64
TWO PLACES	X.XX	X.XX/100	X.XX	X.XX/128
THREE PLACES			X.XXX	X.XXX/512
ANGLES		±2°		

DESIGN UNITS: SI METRIC ☒ | US CUSTOMARY ☐

WEIGHT

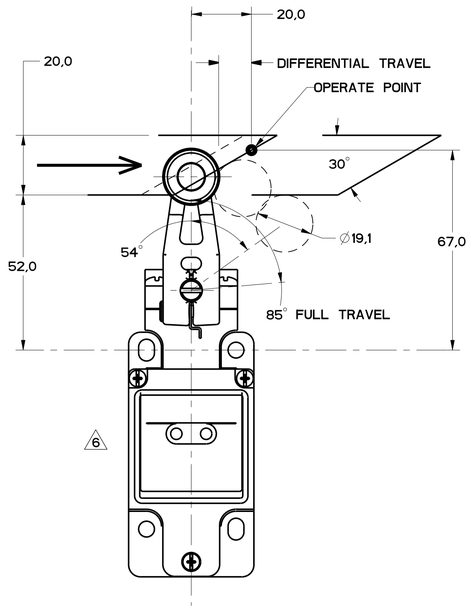

FIGURE 8

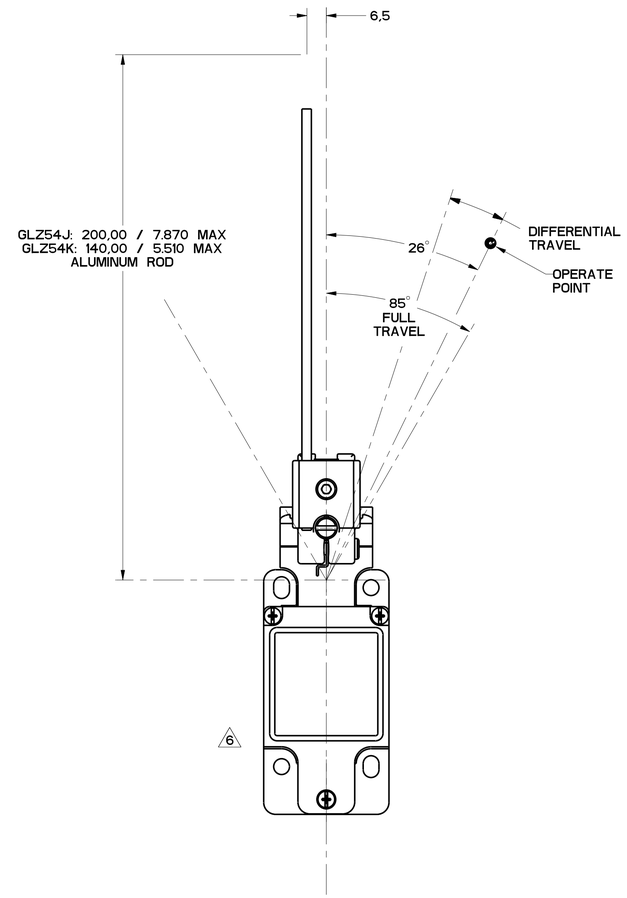

FIGURE 10

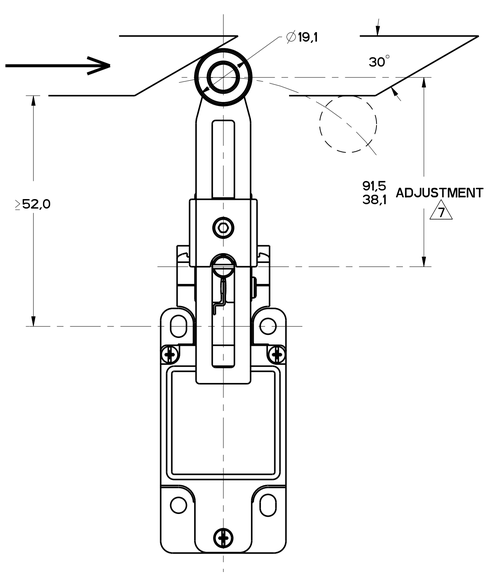

FIGURE 9

FIGURES 8, 9, 10 ANGULAR ACTUATION

CATALOG LISTING	CONTACT BLOCK DIAGRAM	NOMINAL TRAVELS AND RELATED TERMINALS CONTACT CLOSED, CONTACT OPEN, - CONTACT CLOSED DIFFERENTIAL TRAVEL, ** POSITIVE OPENING TO IEC 947-5-	MAXIMUM OPERATING TORQUE N·m / LB-IN	MAXIMUM DISCONNECT TORQUE N·m / LB-IN	MAX OPERATE DEGREE/S	MIN OPERATE DEGREE/S	MAX OPERATE FREQUENCY OPS/MIN
GL**02A*	SNAP - ACTION CONTACTS SINGLE POLE Zb	21-22 / 13-14: 26° 55**° 85° 12° DIFFERENTIAL TRAVEL	.330 / 2.9	.385 / 3.4	1290	13	250

CAM ACTUATION PER EN50041, FIGURES 8 AND 9 7

CATALOG LISTING	CONTACT BLOCK DIAGRAM	NOMINAL TRAVELS AND RELATED TERMINALS CONTACT CLOSED, CONTACT OPEN, - CONTACT CLOSED DIFFERENTIAL TRAVEL, ** POSITIVE OPENING TO IEC 947-5- DIMENSIONS IN mm	MAXIMUM OPERATING FORCE N / LB	MAXIMUM DISCONNECT FORCE N / LB	MAX OPERATE VEL M/S / in/S	MIN OPERATE VEL mm/S / in/S	MAX OPERATE FREQUENCY OPS/MIN
GL**02A*	SNAP - ACTION CONTACTS SINGLE POLE Zb	21-22 / 13-14: 0 20 56** 12 DIFFERENTIAL TRAVEL	9.7 / 2.2	11.4 / 2.6	.85 / 33.5	8.5 / .33	250

THIS DRAWING COVERS A PROPRIETARY ITEM AND IS THE PROPERTY OF MICRO SWITCH, A DIVISION OF HONEYWELL. THIS DRAWING IS NOT TO BE COPIED OR USED WITHOUT THE APPROVAL OF MICRO SWITCH.

FED. MFG. CODE 91929
MICRO SWITCH a Honeywell Division

SWITCH, ENCLOSED

CATALOG LISTING: GL SERIES CHART 2

ANSI Y14.5M-1982 APPLIES

THIRD ANGLE PROJECTION
SCALE FULL
DO NOT SCALE PRINT
TOLERANCES
APPLY TO DESIGN UNITS. CONVERSIONS ARE ONLY FOR REFERENCE. UNLESS NOTED, TOLERANCES ARE ±

	DIM mm	TOL mm	DIM in	TOL in
NO PLACES	X	±1.00	X.X	0.8/.03
ONE PLACE	X.X	0.4/.016	X.XX	0.38/.015
TWO PLACES	X.XX	0.15/.006	X.XXX	0.13/.005
THREE PLACES				
ANGLES		±2°		

DESIGN UNITS: SI METRIC ☒ / US CUSTOMARY ☐
WEIGHT

M GL SERIES CHART 2 — PAGE 4 OF 8 — REPLACES
RELEASE NO. PR-20182
DRAWING NUMBER
ISSUE 11
CHECK MOM
REVISIONS
A PR-21403 — A.S.V. 28MAR96
B CO-93789 — KED 4NOV98
C 0000401 — GLW 2JUN03
D 0002986 — RS 20JAN04
E 0017532 — TPO 02DEC05
CHECK RJ 02DEC05
CHECK S.A.V. 28MAR96
DRAWN PTC/CAD

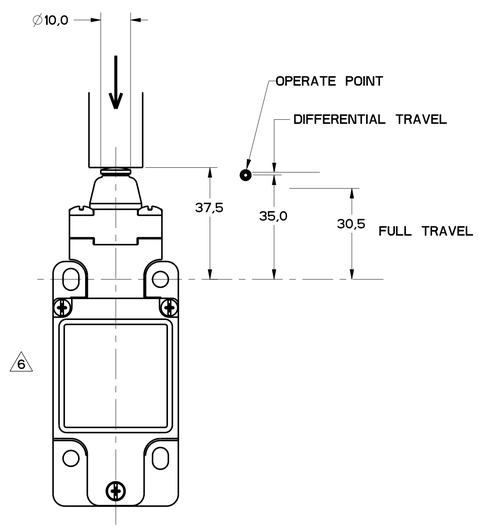

FIGURE 11

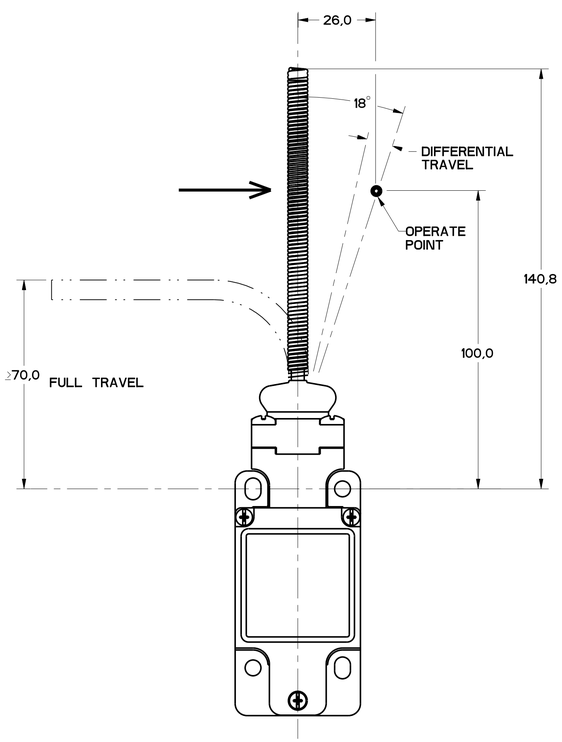

FIGURE 12

FIGURES 11, PIN PLUNGER HEAD, LINEAR ACTUATION

CATALOG LISTING	CONTACT BLOCK DIAGRAM	NOMINAL TRAVELS AND RELATED TERMINALS CONTACT CLOSED, CONTACT OPEN, CONTACT CLOSED DIFFERENTIAL TRAVEL, ** POSITIVE OPENING TO IEC 947-5-1	MAXIMUM OPERATING FORCE N / LB	MAXIMUM DISCONNECT FORCE N / LB	MAX OPERATE VEL M/S / in/S	MIN OPERATE VEL mm/S / in/S	MAX OPERATE FREQUENCY OPS/MIN
GL**02B	SNAP - ACTION CONTACTS SINGLE POLE Zb	37.5 35 33** 30.5 21-22 >, 13-14 < 0.9 DIFFERENTIAL TRAVEL	16 / 3.6	27 / 6.0	0.1 / 3.9	1.0 / .04	250

FIGURE 12, WOBBLE HEAD, ANGULAR ACTUATION

CATALOG LISTING	CONTACT BLOCK DIAGRAM	NOMINAL TRAVELS AND RELATED TERMINALS CONTACT CLOSED, CONTACT OPEN, CONTACT CLOSED DIFFERENTIAL TRAVEL, ** POSITIVE OPENING TO IEC 947-5-1	MAXIMUM OPERATING TORQUE N m / LB/in	MAXIMUM DISCONNECT TORQUE N m / LB/in	MAX OPERATE DEGREE/S	MIN OPERATE VELOCITY DEGREE/S	MAX OPERATE RATE CYCLES/MIN
GL**02E	SNAP - ACTION CONTACTS SINGLE POLE Zb	18° 21-22 >, 13-14 < 8° DIFFERENTIAL TRAVEL	0.2 / 1.8	N/A	360	8	100

FIGURE 12, WOBBLE HEAD, SIDE ACTUATION AT 100mm

CATALOG LISTING	CONTACT BLOCK DIAGRAM	NOMINAL TRAVELS AND RELATED TERMINALS CONTACT CLOSED, CONTACT OPEN, CONTACT CLOSED DIFFERENTIAL TRAVEL, ** POSITIVE OPENING TO IEC 947-5-1	MAXIMUM OPERATING FORCE N / LB	MAXIMUM DISCONNECT FORCE N / LB	MAX OPERATE VEL M/S / in/S	MIN OPERATE VEL mm/S / in/S	MAX OPERATE FREQUENCY OPS/MIN
GL**02E	SNAP - ACTION CONTACTS SINGLE POLE Zb	26 21-22 >, 13-14 < 12 DIFFERENTIAL TRAVEL	2.5 / 0.6	N/A	.5 / 19.7	11 / .43	100

THIRD ANGLE PROJECTION

SCALE FULL

DO NOT SCALE PRINT

TOLERANCES
APPLY TO DESIGN UNITS. CONVERSIONS ARE ONLY FOR REFERENCE. UNLESS NOTED, TOLERANCES ARE :

	DIM mm	TOL mm/in	DIM in	TOL mm/in
NO PLACES	X.	±1/.04	X.X	0.8/.03
ONE PLACE	X.X	±0.8/.016	X.XX	0.38/.015
TWO PLACES	X.XX	0.13/.005	X.XXX	0.13/.005
THREE PLACES				
ANGLES		±2		

SI METRIC [X] US CUSTOMARY [ ]

DESIGN UNITS

WEIGHT

THIS DRAWING COVERS A PROPRIETARY ITEM AND IS THE PROPERTY OF MICRO SWITCH. A DIVISION OF HONEYWELL. THIS DRAWING IS NOT TO BE COPIED OR USED WITHOUT THE APPROVAL OF MICRO SWITCH.

FED. MFG. CODE 91929
MICRO SWITCH a Honeywell Division

SWITCH, ENCLOSED

CATALOG LISTING
GL SERIES CHART 2

ANSI Y14.5M-1982 APPLIES

M GL SERIES CHART 2
PAGE 5 OF 8
RELEASE NO. PR-20782
REPLACES
DRAWING NUMBER
ISSUE 11
CHECK MDM
REVISIONS
A SCO 78092 GLR 20 SEP 94
B CO-93789 KLO 4NOV88
C 0000401 GLR 4JUN03
D 0002986 RS 20JAN04
E 0017532 TGO 02DEC05
CHECK RJ
5JAN94
CHECK MAM
CHECK
1DEC93
DRAWN WLS
PTC/CAD

FIGURE 13A, ROLLER PLUNGER HEAD, PIN ACTUATION

CATALOG LISTING	CONTACT BLOCK DIAGRAM	NOMINAL TRAVELS AND RELATED TERMINALS CONTACT CLOSED, CONTACT OPEN, - CONTACT CLOSED DIFFERENTIAL TRAVEL, ** POSITIVE OPENING TO IEC 947-5-1	MAXIMUM OPERATING FORCE N / LB	MAXIMUM DISCONNECT FORCE N / LB	MAX OPERATE VEL mm/S / in/S	MIN OPERATE VEL mm/S / in/S	MAX OPERATE FREQUENCY OPS/MIN
GL**02C	SNAP - ACTION CONTACTS SINGLE POLE Zb	50.5 48 46** 43.5 21-22 >, 13-14 < 0.9 DIFFERENTIAL TRAVEL	16 / 3.6	27 / 6.0	0.1 / 3.9	1.0 / .04	250

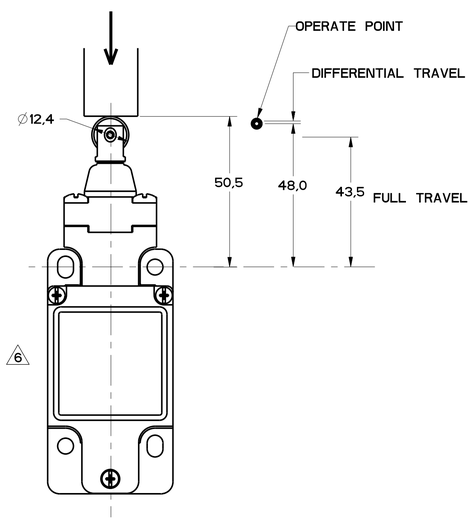

FIGURE 13A

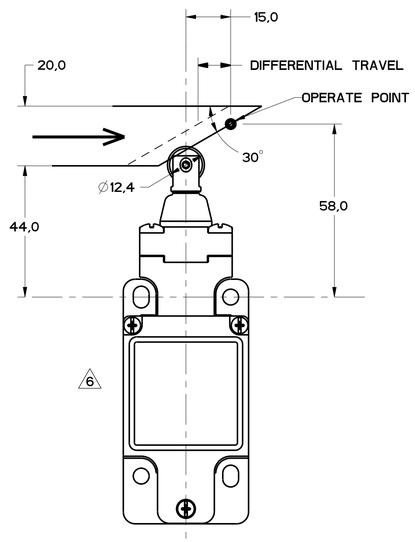

FIGURE 13B

FIGURE 13B, TOP ROLLER PLUNGER HEAD, CAM ACTUATION PER EN50041

CATALOG LISTING	CONTACT BLOCK DIAGRAM	NOMINAL TRAVELS AND RELATED TERMINALS CONTACT CLOSED, CONTACT OPEN, - CONTACT CLOSED DIFFERENTIAL TRAVEL, ** POSITIVE OPENING TO IEC 947-5-1	MAXIMUM OPERATING FORCE N / LB	MAXIMUM DISCONNECT FORCE N / LB	MAX OPERATE VEL mm/S / in/S	MIN OPERATE VEL mm/S / in/S	MAX OPERATE FREQUENCY OPS/MIN
GL**02C	SNAP - ACTION CONTACTS SINGLE POLE Zb	0 15 18.3** 21-22 >, 13-14 < 1.8 DIFFERENTIAL TRAVEL	9.3 / 2.1	15.6 / 3.5	0.17 / 6.7	1.7 / .067	250

THIS DRAWING COVERS A PROPRIETARY ITEM AND IS THE PROPERTY OF MICRO SWITCH, A DIVISION OF HONEYWELL. THIS DRAWING IS NOT TO BE COPIED OR USED WITHOUT THE APPROVAL OF MICRO SWITCH.

FED. MFG. CODE 91929

MICRO SWITCH a Honeywell Division

SWITCH, ENCLOSED

CATALOG LISTING: GL SERIES CHART 2

THIRD ANGLE PROJECTION

SCALE FULL

DO NOT SCALE PRINT

TOLERANCES
APPLY TO DESIGN UNITS. CONVERSIONS ARE ONLY FOR REFERENCE. UNLESS NOTED, TOLERANCES ARE ±

	DIM mm	TOL mm/±	DIM in	TOL in/±
NO PLACES	X	1/.04	X	0.4/.03
ONE PLACE	X.X	0.4/.016	X.XX	0.38/.015
TWO PLACES	X.XX	0.15/.006	X.XXX	0.13/.005
THREE PLACES				
ANGLES		±2°		

SI METRIC [X] US CUSTOMARY [ ]

DESIGN UNITS

WEIGHT

ANSI Y14.5M-1982 APPLIES

PTC/CAD

DRAWN	WLS	01DEC93
CHECK	MAM	5JAN94
CHECK		
CHECK		
CHECK	MDM	

REVISIONS

A	CO-78092 GLH 20-SEP-94	
B	CO-93789 KED 4NOV98	
C	0000401 GLH 2JUN03	R2
D	0002986 AK 22JAN04	
E	0017532 LDG 02DEC05	02DEC05

ISSUE 11

DRAWING NUMBER

RELEASE NO. PR-20182

PAGE 6 OF 8

REPLACES

M GL SERIES CHART 2

FIGURE 14A, TOP ROLLER LEVER HEAD WITH PIN ACTUATION

CATALOG LISTING	CONTACT BLOCK DIAGRAM	NOMINAL TRAVELS AND RELATED TERMINALS CONTACT CLOSED, CONTACT OPEN - CONTACT CLOSED DIFFERENTIAL TRAVEL, ** POSITIVE OPENING TO IEC 947-5-1	MAXIMUM OPERATING FORCE ~~N~~ LB	MAXIMUM DISCONNECT FORCE ~~N~~ LB	MAX OPERATE VEL ~~M/S~~ in/S	MIN OPERATE VEL ~~M/S~~ in/S	MAX OPERATE FREQUENCY OPS/MIN
GL**02D	SNAP - ACTION CONTACTS SINGLE POLE Zb	65.2 61 56.9** 52 21-22 13-14 1.7 DIFFERENTIAL TRAVEL	9.5 / 2.1	12 / 2.7	0.17 / 6.7	1.7 / .067	250

FIGURE 14B, TOP ROLLER LEVER HEAD WITH CAM ACTUATION

CATALOG LISTING	CONTACT BLOCK DIAGRAM	NOMINAL TRAVELS AND RELATED TERMINALS CONTACT CLOSED, CONTACT OPEN - CONTACT CLOSED DIFFERENTIAL TRAVEL, ** POSITIVE OPENING TO IEC 947-5-1	MAXIMUM OPERATING FORCE ~~N~~ LB	MAXIMUM DISCONNECT FORCE ~~N~~ LB	MAX OPERATE VEL ~~M/S~~ in/S	MIN OPERATE VEL ~~M/S~~ in/S	MAX OPERATE FREQUENCY OPS/MIN
GL**02D	SNAP - ACTION CONTACTS SINGLE POLE Zb	0 20 29.1** 21-22 13-14 4.1 DIFFERENTIAL TRAVEL	5.5 / 1.2	7.0 / 1.6	0.29 / 11.4	2.9 / .11	250

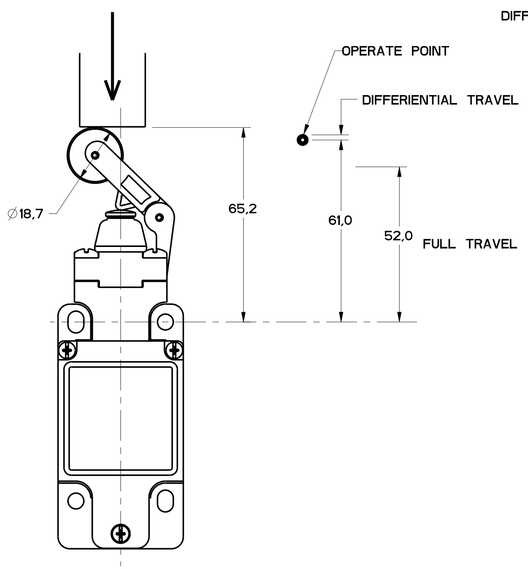

FIGURE 14A

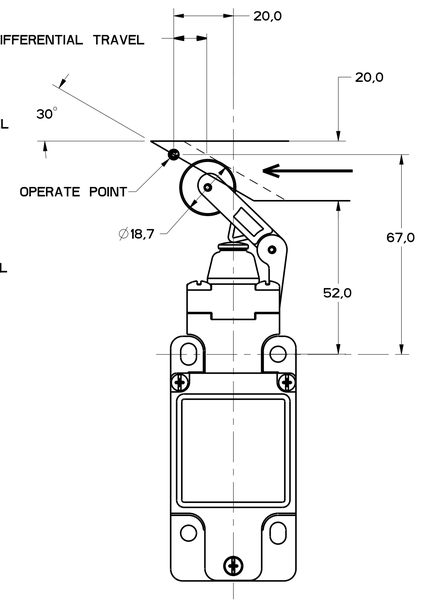

FIGURE 14B

THIS DRAWING COVERS A PROPRIETARY ITEM AND IS THE PROPERTY OF MICRO SWITCH, A DIVISION OF HONEYWELL. THIS DRAWING IS NOT TO BE COPIED OR USED WITHOUT THE APPROVAL OF MICRO SWITCH.

FED. MFG. CODE 91929
MICRO SWITCH a Honeywell Division

SWITCH, ENCLOSED

CATALOG LISTING
GL SERIES CHART 2

THIRD ANGLE PROJECTION
SCALE FULL
DO NOT SCALE PRINT
TOLERANCES
APPLY TO DESIGN UNITS. CONVERSIONS ARE ONLY FOR REFERENCE. UNLESS NOTED, TOLERANCES ARE ±

	SI DIM mm	SI TOL mm/rad	US DIM in	US TOL in/rad
NO PLACES	X	1/.04	X.X	0.8/.03
ONE PLACE	X.X	0.4/.016	X.XX	0.38/.015
TWO PLACES	X.XX	0.13/.005	X.XXX	0.13/.005
THREE PLACES				
ANGLES		±2°		

SI METRIC X
US CUSTOMARY
DESIGN UNITS
WEIGHT

ANSI Y14.5M-1982 APPLIES

PTC/CAD
DRAWN WLS 10DEC93
CHECK MAM 5JAN94
CHECK RJ 02DEC05
CHECK MDM
ISSUE 11
DRAWING NUMBER
M GL SERIES CHART 2
PAGE 7 OF 8
RELEASE NO PR-20782
REPLACES

REVISIONS
A 78092 GLW 20 SEP 94
B CO-93789 RED 4NOV98
C 0005401 GLW 3JUN03
D 0002986 RS 10JAN04
E 0017532 TGG 02DEC05

FIGURE 15, CAT WISKER HEAD, ANGULAR ACTUATION

CATALOG LISTING	CONTACT BLOCK DIAGRAM	NOMINAL TRAVELS AND RELATED TERMINALS (CONTACT CLOSED, CONTACT OPEN, - CONTACT CLOSED) DIFFERENTIAL TRAVEL	MAXIMUM OPERATING TORQUE ~~N-m~~ LB-IN	MAXIMUM DISCONNECT TORQUE ~~N-m~~ LB-IN	MAX OPERATE DEGREE/S	MIN OPERATE VELOCITY DEGREE/S	MAX OPERATE RATE CYCLES/MIN
GL**02K	SNAP - ACTION CONTACTS SINGLE POLE 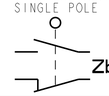		0.1 / .9	N/A	360	8	100

FIGURE 15, CAT WISKER HEAD, SIDE ACTUATION AT 100mm

CATALOG LISTING	CONTACT BLOCK DIAGRAM	NOMINAL TRAVELS AND RELATED TERMINALS (CONTACT CLOSED, CONTACT OPEN, - CONTACT CLOSED) DIFFERENTIAL TRAVEL	MAXIMUM OPERATING FORCE ~~N~~ LB	MAXIMUM DISCONNECT FORCE ~~N~~ LB	MAX OPERATE VEL ~~M/S~~ in/S	MIN OPERATE VEL ~~mm/S~~ in/S	MAX OPERATE FREQUENCY OPS/MIN
GL**02K	SNAP - ACTION CONTACTS SINGLE POLE 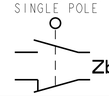	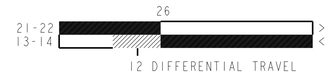	1.3 / .3	N/A	.5 / 19.7	11 / .43	100

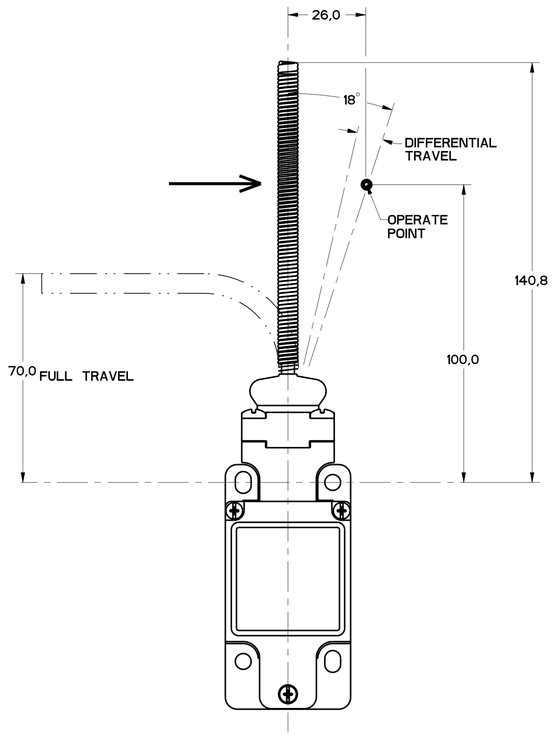

FIGURE 15

THIS DRAWING COVERS A PROPRIETARY ITEM AND IS THE PROPERTY OF MICRO SWITCH, A DIVISION OF HONEYWELL. THIS DRAWING IS NOT TO BE COPIED OR USED WITHOUT THE APPROVAL OF MICRO SWITCH.

FED. MFG. CODE 91929
MICRO SWITCH a Honeywell Division
SWITCH, ENCLOSED
CATALOG LISTING
GL SERIES CHART 2

THIRD ANGLE PROJECTION
SCALE FULL
DO NOT SCALE PRINT
TOLERANCES
APPLY TO DESIGN UNITS. CONVERSIONS ARE ONLY FOR REFERENCE. UNLESS NOTED, TOLERANCES ARE ±

	DIM mm	TOL mm±±	DIM in	TOL in±±
NO PLACES	X	1/.04	X	0.8/.03
ONE PLACE	X.X	0.4/.016	X.X	0.38/.015
TWO PLACES	X.XX	0.15/.006	X.XX	0.13/.005
THREE PLACES			X.XXX	
ANGLES		±2°		

SI METRIC X US CUSTOMARY
DESIGN UNITS
WEIGHT

ANSI Y14.5M-1982 APPLIES

PTC/CAD
DRAWN WLS 10 DEC 93
CHECK MAM 5JAN94
CHECK
CHECK
CHECK MDM
ISSUE 11
DRAWING NUMBER
M GL SERIES CHART 2
PAGE 8 OF 8
RELEASE NO PR-20782
REPLACES

REVISIONS
A CO-78692 GLR 20 SEP 94 020EC05
B CO-93789 WED 4NOV88
C 0005401 GLR 3JUN93 RJ
D 0002986 RS 10JAN04
E 0017532 TGG 02DEC05

Мы молодая и активно развивающаяся компания в области поставок электронных компонентов. Мы поставляем электронные компоненты отечественного и импортного производства напрямую от производителей и с крупнейших складов мира.

Благодаря сотрудничеству с мировыми поставщиками мы осуществляем комплексные и плановые поставки широчайшего спектра электронных компонентов.

Собственная эффективная логистика и склад в обеспечивает надежную поставку продукции в точно указанные сроки по всей России.

Мы осуществляем техническую поддержку нашим клиентам и предпродажную проверку качества продукции. На все поставляемые продукты мы предоставляем гарантию .

Осуществляем поставки продукции под контролем ВП МО РФ на предприятия военно-промышленного комплекса России , а также работаем в рамках 275 ФЗ с открытием отдельных счетов в уполномоченном банке. Система менеджмента качества компании соответствует требованиям ГОСТ ISO 9001.

Минимальные сроки поставки, гибкие цены, неограниченный ассортимент и индивидуальный подход к клиентам являются основой для выстраивания долгосрочного и эффективного сотрудничества с предприятиями радиоэлектронной промышленности, предприятиями ВПК и научно-исследовательскими институтами России.

С нами вы становитесь еще успешнее!

Наши контакты:

Телефон: +7 812 627 14 35

Электронная почта: sales@st-electron.ru

Адрес: 198099, Санкт-Петербург, Промышленная ул, дом № 19, литера Н, помещение 100-Н Офис 331