74LVC1G126

SINGLE BUFFER GATE WITH 3-STATE OUTPUT

Description

The 74LVC1G126 is a single non-inverting buffer/bus driver with a 3-state output. The output enters a high impedance state when a LOW-level is applied to the output enable (OE) pin. The device is designed for operation with a power supply range of 1.65V to 5.5V. The inputs are tolerant to 5.5V allowing this device to be used in a mixed voltage environment. The device is fully specified for partial power down applications using I_{OFF}. The I_{OFF} circuitry disables the output preventing damaging current backflow when the device is powered down.

Features

- Wide Supply Voltage Range from 1.65 to 5.5V
- ± 24mA Output Drive at 3.3V
- CMOS low power consumption
- I_{OFF} Supports Partial-Power-Down Mode Operation
- Inputs accept up to 5.5V
- ESD Protection Tested per JESD 22
  - Exceeds 200-V Machine Model (A115-A)
  - Exceeds 2000-V Human Body Model (A114-A)
  - Exceeds 1000-V Charged Device Model (C101C)
- Latch-Up Exceeds 100mA per JESD 78, Class II
- Range of Package Options
- Direct Interface with TTL Levels
- All packages Assembled with "Green" Molding Compound (no Br, Sb)
- **Lead-Free Finish; RoHS Compliant (Notes 1 & 2)**
- **Halogen and Antimony Free. "Green" Device (Note 3)**

Pin Assignments

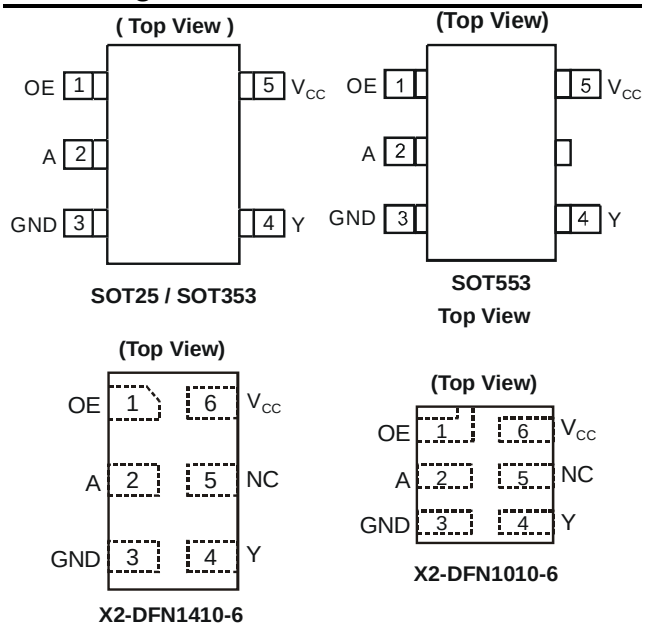

Applications

- Voltage Level Shifting
- Bus Driver / Repeater
- Power Down Signal Isolation
- General Purpose Logic
- Wide array of products such as:
  - PCs, networking, notebooks, netbooks, PDAs
  - Tablet Computers, E-readers
  - Computer peripherals, hard drives, CD/DVD ROM
  - TV, DVD, DVR, set top box
  - Cell Phones, Personal Navigation / GPS
  - MP3 players ,Cameras, Video Recorders

Notes:
1. EU Directive 2002/95/EC (RoHS) & 2011/65/EU (RoHS 2) compliant. All applicable RoHS exemptions applied.
2. See http://www.diodes.com for more information about Diodes Incorporated's definitions of Halogen- and Antimony-free, "Green" and Lead-free.
3. Halogen- and Antimony-free "Green" products are defined as those which contain <900ppm bromine, <900ppm chlorine (<1500ppm total Br + Cl) and <1000ppm antimony compounds.

© Diodes Incorporated

Pin Descriptions

Pin Name	Description
OE	Output Enable
A	Data Input
GND	Ground
Y	Data Output
V_{CC}	Supply Voltage
NC	No Connection

Logic Diagram

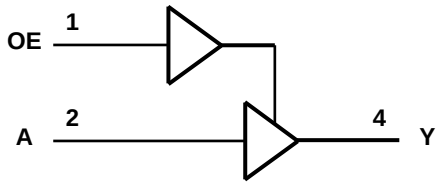

Function Table

Inputs		Output
OE	A	Y
H	H	H
H	L	L
L	X	Z

Absolute Maximum Ratings (Note 4)

Symbol	Description	Rating	Unit
ESD HBM	Human Body Model ESD Protection	2	KV
ESD CDM	Charged Device Model ESD Protection	1	KV
ESD MM	Machine Model ESD Protection	200	V
V_{CC}	Supply Voltage Range	-0.5 to +6.5	V
V_I	Input Voltage Range	-0.5 to +6.5	V
V_O	Voltage applied to output in high impedance or I_{OFF} state	-0.5 to +6.5	V
V_O	Voltage applied to output in high or low state	-0.3 to V_{CC} +0.5	V
I_{IK}	Input Clamp Current $V_I < 0$	-50	mA
I_{OK}	Output Clamp Current	-50	mA
I_O	Continuous output current	±50	mA
	Continuous current through V_{DD} or GND	±100	mA
T_J	Operating Junction Temperature	-40 to +150	°C
T_{STG}	Storage Temperature	-65 to +150	°C

Notes: 4. Stresses beyond the absolute maximum may result in immediate failure or reduced reliability. These are stress values and device operation should be within recommend values.

© Diodes Incorporated

Recommended Operating Conditions (Note 5)

Symbol	Parameter		Min	Max	Unit
V_{CC}	Operating Voltage	Operating	1.65	5.5	V
		Data retention only	1.5	15	V
V_{IH}	High-level Input Voltage	V_{CC} = 1.65V to 1.95V	0.65 X V_{CC}		V
		V_{CC} = 2.3V to 2.7V	1.7		
		V_{CC} = 3V to 3.6V	2		
		V_{CC} = 4.5V to 5.5V	0.7 X V_{CC}		
V_{IL}	Low-level input voltage	V_{CC} = 1.65V to 1.95V		0.35 X V_{CC}	V
		V_{CC} = 2.3V to 2.7V		0.7	
		V_{CC} = 3V to 3.6V		0.8	
		V_{CC} = 4.5V to 5.5V		0.3 X V_{CC}	
V_I	Input Voltage		0	5.5	V
V_O	Output Voltage		0	V_{CC}	V
I_{OH}	High-level output current	V_{CC} = 1.65V		-4	mA
		V_{CC} = 2.3V		-8	
		V_{CC} = 3V		-16	
				-24	
		V_{CC} = 4.5V		-32	
I_{OL}	Low-level output current	V_{CC} = 1.65V		4	mA
		V_{CC} = 2.3V		8	
		V_{CC} = 3V		16	
				24	
		V_{CC} = 4.5V		32	
Δt/ΔV	Input transition rise or fall rate	V_{CC} = 1.8V ± 0.15V, 2.5V ± 0.2V		20	ns/V
		V_{CC} = 3.3V ± 0.3V		10	
		V_{CC} = 5V ± 0.5V		5	
T_A	Operating free-air temperature		-40	+125	°C

Notes: 5. Unused inputs should be held at V_{CC} or Ground.

© Diodes Incorporated

Electrical Characteristics (All typical values are at V_{CC} = 3.3V, T_A = +25°C.)

Symbol	Parameter	Test Conditions	V_{CC}	-40°C to +85°C			-40°C to +125°C		Unit
				Min	Typ	Max	Min	Max	
V_{OH}	High Level Output Voltage	I_{OH} = -100µA	1.65V to 5.5V	V_{CC} -0.1			V_{CC} -0.1		V
		I_{OH} = -4mA	1.65V	1.2			0.95		
		I_{OH} = -8mA	2.3V	1.9			1.7		
		I_{OH} = -16mA	3V	2.4			2.2		
		I_{OH} = -24mA		2.3			2.0		
		I_{OH} = -32mA	4.5V	3.8			3.4		
V_{OL}	Low Level Output Voltage	I_{OL} = 100µA	1.65V to 5.5V			0.1		0.1	V
		I_{OL} = 4mA	1.65V			0.45		0.7	
		I_{OL} = 8mA	2.3V			0.3		0.45	
		I_{OL} = 16mA	3V			0.4		0.6	
		I_{OL} = 24mA				0.55		0.8	
		I_{OL} = 32mA	4.5V			0.55		.8	
I_I	Input Current	V_I = 5.5V or GND	0 to 5.5V		± 0.1	±5		± 100	µA
I_{OFF}	Power Down Leakage Current	V_I or V_O = 5.5V	0V			±10		±200	µA
I_{OZ}	Z State Leakage Current	V_O =0 to 5.5V	3.6V		0.1	10		20	µA
I_{CC}	Supply Current	V_I = 5.5V or GND I_O=0	5.5V		0.1	10		200	µA
ΔI_{CC}	Additional Supply Current	One input at V_{CC} -0.6 V Other inputs at V_{CC} or GND	3V to 5.5V			500		5000	µA
C_i	Input Capacitance	V_I = V_{CC} – or GND	3.3V		5				pF

Operating Characteristics

T_A = +25°C

Parameter			Test Conditions	V_{CC} = 1.8V	V_{CC} = 2.5V	V_{CC} = 3.3V	V_{CC} = 5V	Unit
				Typ	Typ	Typ	Typ	
C_{pd}	Power dissipation capacitance	Outputs enabled	f = 10 MHz	19	19	19	21	pF
		Outputs disabled		2	2	3	4	

© Diodes Incorporated

Package Characteristics (All typical values are at V_{CC} = 3.3V, T_A = +25°C.)

Symbol	Parameter	Test Conditions	V_{CC}	Min	Typ	Max	Unit
θ_{JA}	Thermal Resistance Junction-to-Ambient	SOT25	(Note 6)		204		°C/W
		SOT353			371		
		SOT553			231		
		X2-DFN1010-6			445		
		X2-DFN1410-6			460		
θ_{JC}	Thermal Resistance Junction-to-Case	SOT25	(Note 6)		52		°C/W
		SOT353			143		
		SOT553			105		
		X2-DFN1010-6			250		
		X2-DFN1410-6			265		

Notes: 6. Test condition for SOT25, SOT353, SOT553, X2-DFN1410-6 and X2-DFN1010-6: Device mounted on FR-4 substrate PC board, 2oz copper, with minimum recommended pad layout.

Switching Characteristics (Typical Values @ T_A = +25°C and nominal voltages 1.8V, 2.5V, 2.7V, 3.3V, and 5.0V.)

Parameter	From Input	To Output	V_{CC}	T_A = -40°C to +85°C			T_A = -40°C to +125°C		Unit
				Min	Typ	Max	Min	Max	
t_{pd}	A	Y	1.8V ± 0.15V	1.0	3.0	8.0	1.0	10.5	ns
			2.5V ± 0.2V	0.5	2.1	5.5	0.5	7.0	
			2.7V	0.5	2.3	5.5	0.5	7.5	
			3.3V ± 0.3V	0.5	2.0	4.5	0.5	6.0	
			5.0V ± 0.5V	0.5	1.7	4.0	0.5	5.5	
t_{en}	OE	Y	1.8V ± 0.15V	1.0	3.2	9.4	1.0	12.0	ns
			2.5V ± 0.2V	0.5	2.2	6.6	0.5	8.5	
			2.7V	0.5	2.4	6.6	0.5	8.5	
			3.3V ± 0.3V	0.5	2.1	5.3	0.5	7.0	
			5.0V ± 0.5V	0.5	1.6	5.0	0.5	6.5	
t_{dis}	OE	Y	1.8V ± 0.15V	1.0	4.3	9.2	1.0	12.0	ns
			2.5V ± 0.2V	0.5	2.7	5.5	0.5	7.0	
			2.7V	0.5	3.4	5.5	0.5	7.0	
			3.3V ± 0.3V	0.5	3.0	5.5	0.5	7.0	
			5.0V ± 0.5V	0.5	2.2	4.2	0.5	5.5	

© Diodes Incorporated

Parameter Measurement Information

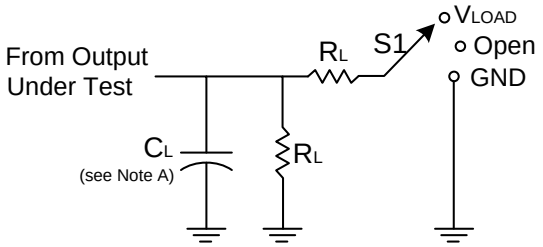

TEST	S1
t_{PLH}/t_{PHL}	Open
t_{PLZ}/t_{PZL}	V_{LOAD}
t_{PHZ}/t_{PZH}	GND

V_{CC}	Inputs		V_M	V_{LOAD}	C_L	R_L	$V\Delta$
	V_I	t_r/t_f					
1.8V±0.15V	V_{CC}	≤2ns	$V_{CC}/2$	2 X V_{CC}	30pF	1KΩ	0.15V
2.5V±0.2V	V_{CC}	≤2ns	$V_{CC}/2$	2 X V_{CC}	30pF	500Ω	0.15V
2.7V	2.7V	≤2.5ns	1.5V	6V	50pF	500Ω	0.3V
3.3V±0.3V	3V	≤2.5ns	1.5V	6V	50pF	500Ω	0.3V
5V±0.5V	V_{CC}	≤2.5ns	$V_{CC}/2$	2 X V_{CC}	50pF	500Ω	0.3V

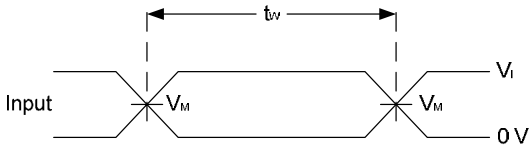

Voltage Waveform Pulse Duration

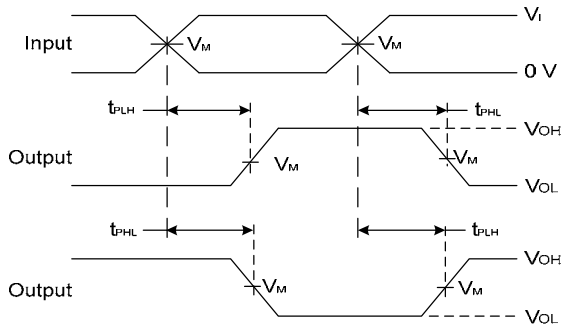

Voltage Waveform Propagation Delay Times
Inverting and Non Inverting Outputs

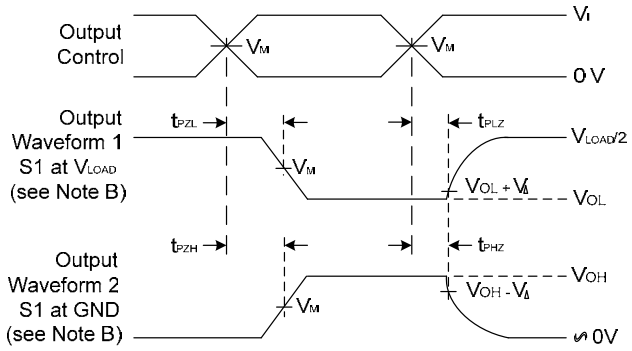

Voltage Waveform Enable and Disable Times
Low and High Level Enabling

Figure 1. Load Circuit and Voltage Waveforms

Notes:
A. Includes test lead and test apparatus capacitance.
B. All pulses are supplied at pulse repetition rate ≤ 10 MHz.
C. Inputs are measured separately one transition per measurement.
D. t_{PLZ} and t_{PHZ} are the same as t_{dis}.
E. t_{PZL} and t_{PZH} are the same as t_{EN}.
F. t_{PLH} and t_{PHL} are the same as t_{PD}.

© Diodes Incorporated

Ordering Information

74LVC1G 126 XXX -7

Logic Device	Function	Package	Packing
74 : Logic Prefix LVC : 1.65 to 5.5V Family 1G : One Gate	126 : 3-State Buffer OE - High	W5 : SOT25 SE : SOT353 Z : SOT553 FW4 : X2-DFN1010-6 FZ4 : X2-DFN1410-6	7 : Tape & Reel

Device	Package Code	Packaging (Note 7)	7" Tape and Reel	
			Quantity	Part Number Suffix
74LVC1G126W5-7	W5	SOT25	3000/Tape & Reel	-7
74LVC1G126SE-7	SE	SOT353	3000/Tape & Reel	-7
74LVC1G126Z-7	Z	SOT553	4000/Tape & Reel	-7
74LVC1G126FW4-7	FW4	X2-DFN1010-6	5000/Tape & Reel	-7
74LVC1G126FZ4-7	FZ4	X2-DFN1410-6	5000/Tape & Reel	-7

Notes: 7. The taping orientation is located on our website at http://www.diodes.com/datasheets/ap02007.pdf

Marking Information

(1) SOT25, SOT353 and SOT553

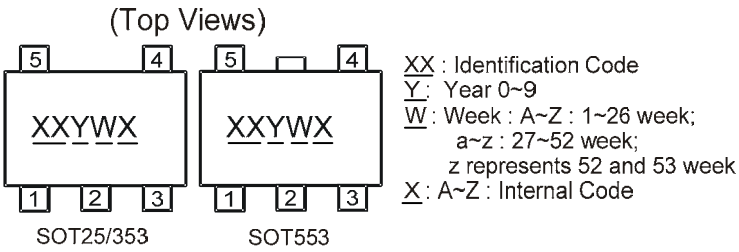

Part Number	Package	Identification Code
74LVC1G126W5	SOT25	UZ
74LVC1G126SE	SOT353	UZ
74LVC1G126Z	SOT553	UZ

(2) X2-DFN1010-6 and X2-DFN1410-6

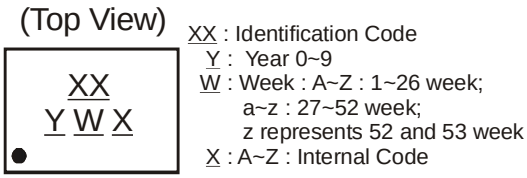

Part Number	Package	Identification Code
74LVC1G126FW4	X2-DFN1010-6	UZ
74LVC1G126FZ4	X2-DFN1410-6	UZ

© Diodes Incorporated

Package Outline Dimensions (All Dimensions in mm)

(1) Package Type: SOT25

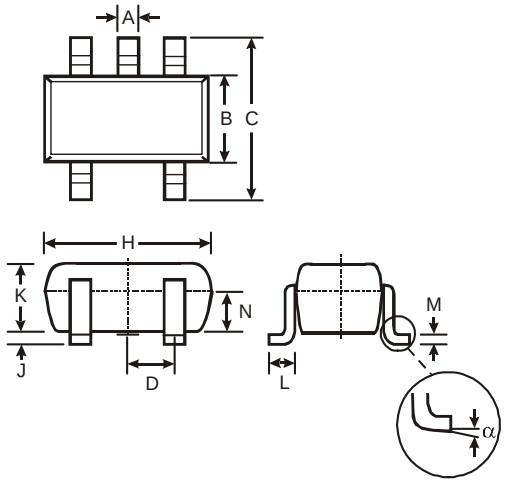

SOT25			
Dim	Min	Max	Typ
A	0.35	0.50	0.38
B	1.50	1.70	1.60
C	2.70	3.00	2.80
D	—	—	0.95
H	2.90	3.10	3.00
J	0.013	0.10	0.05
K	1.00	1.30	1.10
L	0.35	0.55	0.40
M	0.10	0.20	0.15
N	0.70	0.80	0.75
α	0°	8°	—
All Dimensions in mm			

(2) Package Type: SOT353

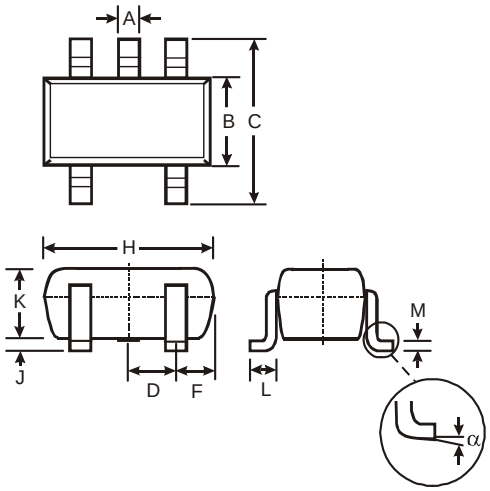

SOT353		
Dim	Min	Max
A	0.10	0.30
B	1.15	1.35
C	2.00	2.20
D	0.65 Typ	
F	0.40	0.45
H	1.80	2.20
J	0	0.10
K	0.90	1.00
L	0.25	0.40
M	0.10	0.22
α	0°	8°
All Dimensions in mm		

(3) Package Type: SOT553

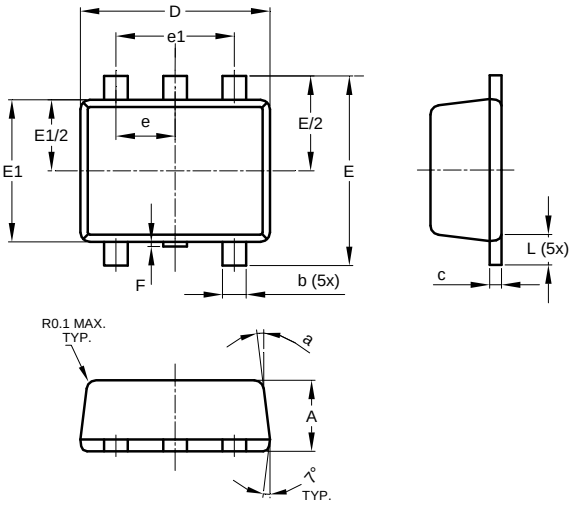

SOT553			
Dim	Min	Max	Typ
A	0.55	0.62	0.60
b	0.15	0.30	0.20
c	0.10	0.18	0.15
D	1.50	1.70	1.60
E	1.55	1.70	1.60
E1	1.10	1.25	1.20
e	0.50 BSC		
e1	1.00 BSC		
F	0.00	0.10	—
L	0.10	0.30	0.20
a	6°	8°	7°
All Dimensions in mm			

© Diodes Incorporated

Package Outline Dimensions (cont.)

(4) Package Type X2-DFN1010-6

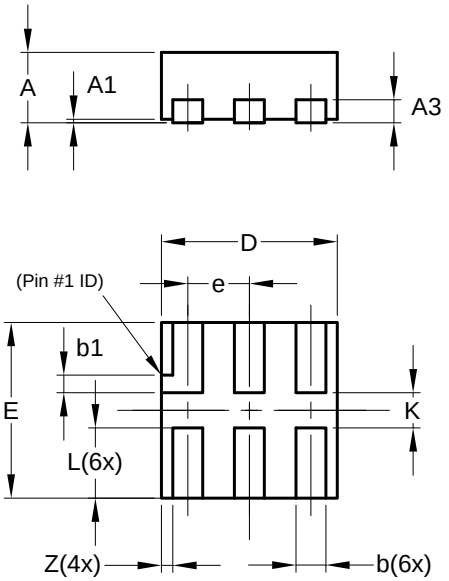

X2-DFN1010-6			
Dim	**Min**	**Max**	**Typ**
A	—	0.40	0.39
A1	0.00	0.05	0.02
A3	—	—	0.13
b	0.14	0.20	0.17
b1	0.05	0.15	0.10
D	0.95	1.05	1.00
E	0.95	1.05	1.00
e	—	—	0.35
L	0.35	0.45	0.40
K	0.15	—	—
Z	—	—	0.065
All Dimensions in mm			

(5) Package Type: X2-DFN1410-6

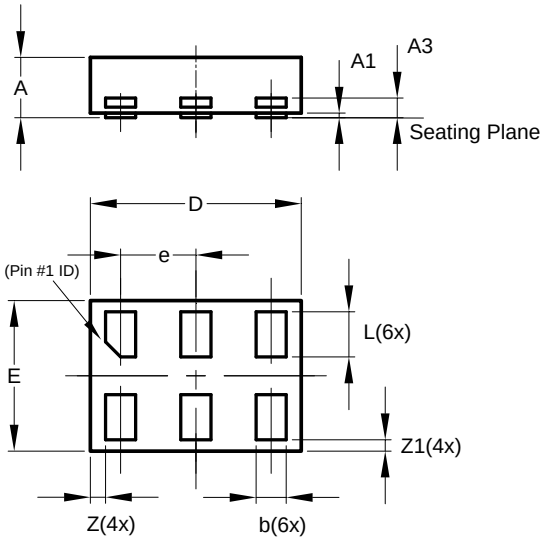

X2-DFN1410-6			
Dim	**Min**	**Max**	**Typ**
A	—	0.40	0.39
A1	0.00	0.05	0.02
A3	—	—	0.13
b	0.15	0.25	0.20
D	1.35	1.45	1.40
E	0.95	1.05	1.00
e	—	—	0.50
L	0.25	0.35	0.30
Z	—	—	0.10
Z1	0.045	0.105	0.075
All Dimensions in mm			

© Diodes Incorporated

Suggested Pad Layout

(1) Package Type: SOT25

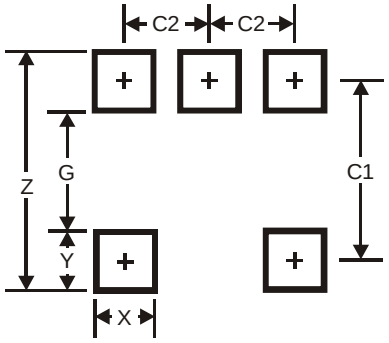

Dimensions	Value (in mm)
Z	3.20
G	1.60
X	0.55
Y	0.80
C1	2.40
C2	0.95

(2) Package Type: SOT353

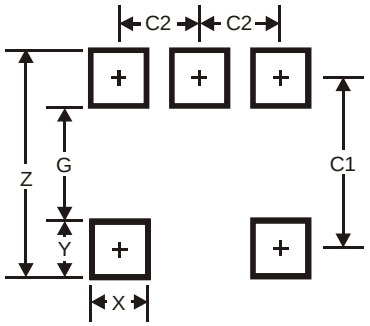

Dimensions	Value (in mm)
Z	2.5
G	1.3
X	0.42
Y	0.6
C1	1.9
C2	0.65

(3) Package Type: SOT553

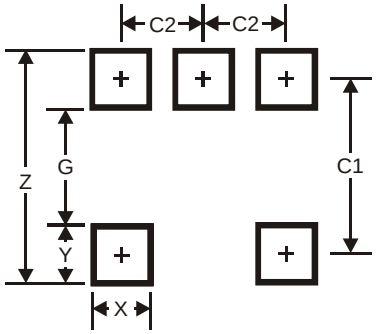

Dimensions	Value (in mm)
Z	2.2
G	1.2
X	0.375
Y	0.5
C1	1.7
C2	0.5

© Diodes Incorporated

Suggested Pad Layout (cont.)

(4) Package Type X2-DFN1010-6

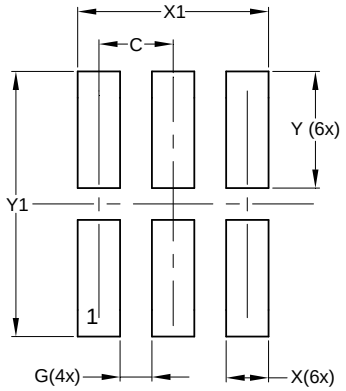

Dimensions	Value (in mm)
C	0.350
G	0.150
X	0.200
X1	0.900
Y	0.550
Y1	1.250

(5) Package Type: X2-DFN1410-6

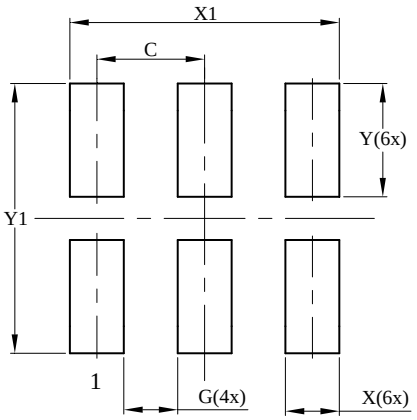

Dimensions	Value (in mm)
C	0.500
G	0.250
X	0.250
X1	1.250
Y	0.525
Y1	1.250

© Diodes Incorporated

IMPORTANT NOTICE

DIODES INCORPORATED MAKES NO WARRANTY OF ANY KIND, EXPRESS OR IMPLIED, WITH REGARDS TO THIS DOCUMENT, INCLUDING, BUT NOT LIMITED TO, THE IMPLIED WARRANTIES OF MERCHANTABILITY AND FITNESS FOR A PARTICULAR PURPOSE (AND THEIR EQUIVALENTS UNDER THE LAWS OF ANY JURISDICTION).

Diodes Incorporated and its subsidiaries reserve the right to make modifications, enhancements, improvements, corrections or other changes without further notice to this document and any product described herein. Diodes Incorporated does not assume any liability arising out of the application or use of this document or any product described herein; neither does Diodes Incorporated convey any license under its patent or trademark rights, nor the rights of others. Any Customer or user of this document or products described herein in such applications shall assume all risks of such use and will agree to hold Diodes Incorporated and all the companies whose products are represented on Diodes Incorporated website, harmless against all damages.

Diodes Incorporated does not warrant or accept any liability whatsoever in respect of any products purchased through unauthorized sales channel.
Should Customers purchase or use Diodes Incorporated products for any unintended or unauthorized application, Customers shall indemnify and hold Diodes Incorporated and its representatives harmless against all claims, damages, expenses, and attorney fees arising out of, directly or indirectly, any claim of personal injury or death associated with such unintended or unauthorized application.

Products described herein may be covered by one or more United States, international or foreign patents pending. Product names and markings noted herein may also be covered by one or more United States, international or foreign trademarks.

LIFE SUPPORT

Diodes Incorporated products are specifically not authorized for use as critical components in life support devices or systems without the express written approval of the Chief Executive Officer of Diodes Incorporated. As used herein:

A. Life support devices or systems are devices or systems which:

1. are intended to implant into the body, or

2. support or sustain life and whose failure to perform when properly used in accordance with instructions for use provided in the labeling can be reasonably expected to result in significant injury to the user.

B. A critical component is any component in a life support device or system whose failure to perform can be reasonably expected to cause the failure of the life support device or to affect its safety or effectiveness.

Customers represent that they have all necessary expertise in the safety and regulatory ramifications of their life support devices or systems, and acknowledge and agree that they are solely responsible for all legal, regulatory and safety-related requirements concerning their products and any use of Diodes Incorporated products in such safety-critical, life support devices or systems, notwithstanding any devices- or systems-related information or support that may be provided by Diodes Incorporated. Further, Customers must fully indemnify Diodes Incorporated and its representatives against any damages arising out of the use of Diodes Incorporated products in such safety-critical, life support devices or systems.

Copyright © 2012, Diodes Incorporated

www.diodes.com

Мы молодая и активно развивающаяся компания в области поставок электронных компонентов. Мы поставляем электронные компоненты отечественного и импортного производства напрямую от производителей и с крупнейших складов мира.

Благодаря сотрудничеству с мировыми поставщиками мы осуществляем комплексные и плановые поставки широчайшего спектра электронных компонентов.

Собственная эффективная логистика и склад в обеспечивает надежную поставку продукции в точно указанные сроки по всей России.

Мы осуществляем техническую поддержку нашим клиентам и предпродажную проверку качества продукции. На все поставляемые продукты мы предоставляем гарантию .

Осуществляем поставки продукции под контролем ВП МО РФ на предприятия военно-промышленного комплекса России , а также работаем в рамках 275 ФЗ с открытием отдельных счетов в уполномоченном банке. Система менеджмента качества компании соответствует требованиям ГОСТ ISO 9001.

Минимальные сроки поставки, гибкие цены, неограниченный ассортимент и индивидуальный подход к клиентам являются основой для выстраивания долгосрочного и эффективного сотрудничества с предприятиями радиоэлектронной промышленности, предприятиями ВПК и научно-исследовательскими институтами России.

С нами вы становитесь еще успешнее!

Наши контакты:

Телефон: +7 812 627 14 35

Электронная почта: sales@st-electron.ru

Адрес: 198099, Санкт-Петербург, Промышленная ул, дом № 19, литера Н, помещение 100-Н Офис 331