GENERAL PURPOSE 6-PIN PHOTOTRANSISTOR OPTOCOUPLERS

4N25	**4N26**	**4N27**	**4N28**	**4N35**	**4N36**
4N37	**H11A1**	**H11A2**	**H11A3**	**H11A4**	**H11A5**

WHITE PACKAGE (-M SUFFIX)

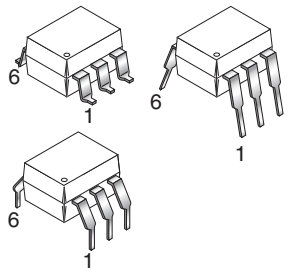

SCHEMATIC

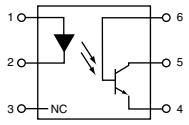

PIN 1. ANODE
2. CATHODE
3. NO CONNECTION
4. EMITTER
5. COLLECTOR
6. BASE

BLACK PACKAGE (NO -M SUFFIX)

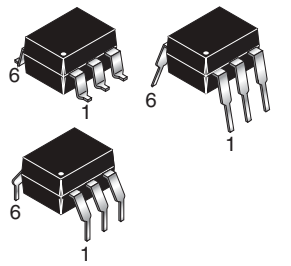

DESCRIPTION

The general purpose optocouplers consist of a gallium arsenide infrared emitting diode driving a silicon phototransistor in a 6-pin dual in-line package.

FEATURES

- Also available in white package by specifying -M suffix, eg. 4N25-M
- UL recognized (File # E90700)
- VDE recognized (File # 94766)
  - Add option V for white package (e.g., 4N25V-M)
  - Add option 300 for black package (e.g., 4N25.300)

APPLICATIONS

- Power supply regulators
- Digital logic inputs
- Microprocessor inputs

© 2005 Fairchild Semiconductor Corporation

ABSOLUTE MAXIMUM RATINGS (T_A = 25°C unless otherwise specified)

Parameter	Symbol	Value	Units
TOTAL DEVICE			
Storage Temperature	T_{STG}	-55 to +150	°C
Operating Temperature	T_{OPR}	-55 to +100	°C
Wave solder temperature (see page 14 for reflow solder profiles)	T_{SOL}	260 for 10 sec	°C
Total Device Power Dissipation @ T_A = 25°C	P_D	250	mW
Derate above 25°C		3.3 (non-M), 2.94 (-M)	
EMITTER			
DC/Average Forward Input Current	I_F	100 (non-M), 60 (-M)	mA
Reverse Input Voltage	V_R	6	V
Forward Current - Peak (300µs, 2% Duty Cycle)	I_F(pk)	3	A
LED Power Dissipation @ T_A = 25°C	P_D	150 (non-M), 120 (-M)	mW
Derate above 25°C		2.0 (non-M), 1.41 (-M)	mW/°C
DETECTOR			
Collector-Emitter Voltage	V_{CEO}	30	V
Collector-Base Voltage	V_{CBO}	70	V
Emitter-Collector Voltage	V_{ECO}	7	V
Detector Power Dissipation @ T_A = 25°C	P_D	150	mW
Derate above 25°C		2.0 (non-M), 1.76 (-M)	mW/°C

© 2005 Fairchild Semiconductor Corporation

ELECTRICAL CHARACTERISTICS (T_A = 25°C unless otherwise specified)

INDIVIDUAL COMPONENT CHARACTERISTICS

Parameter	Test Conditions	Symbol	Min	Typ*	Max	Unit
EMITTER						
Input Forward Voltage	(I_F = 10 mA)	V_F		1.18	1.50	V
Reverse Leakage Current	(V_R = 6.0 V)	I_R		0.001	10	µA
DETECTOR						
Collector-Emitter Breakdown Voltage	(I_C = 1.0 mA, I_F = 0)	BV_{CEO}	30	100		V
Collector-Base Breakdown Voltage	(I_C = 100 µA, I_F = 0)	BV_{CBO}	70	120		V
Emitter-Collector Breakdown Voltage	(I_E = 100 µA, I_F = 0)	BV_{ECO}	7	10		V
Collector-Emitter Dark Current	(V_{CE} = 10 V, I_F = 0)	I_{CEO}		1	50	nA
Collector-Base Dark Current	(V_{CB} = 10 V)	I_{CBO}			20	nA
Capacitance	(V_{CE} = 0 V, f = 1 MHz)	C_{CE}		8		pF

ISOLATION CHARACTERISTICS

Characteristic	Test Conditions	Symbol	Min	Typ*	Max	Units
Input-Output Isolation Voltage	(Non '-M', Black Package) (f = 60 Hz, t = 1 min)	V_{ISO}	5300			Vac(rms)
	('-M', White Package) (f = 60 Hz, t = 1 sec)		7500			Vac(pk)
Isolation Resistance	(V_{I-O} = 500 VDC)	R_{ISO}	10^{11}			Ω
Isolation Capacitance	(V_{I-O} = &, f = 1 MHz)	C_{ISO}		0.5		pF
	('-M' White Package)			0.2	2	pF

Note
* Typical values at T_A = 25°C

TRANSFER CHARACTERISTICS (T_A = 25°C Unless otherwise specified.)

DC Characteristic	Test Conditions	Symbol	Device	Min	Typ*	Max	Unit
Current Transfer Ratio, Collector to Emitter	(I_F = 10 mA, V_{CE} = 10 V)	CTR	4N35 4N36 4N37	100			%
			H11A1	50			
			H11A5	30			
			4N25 4N26 H11A2 H11A3	20			
			4N27 4N28 H11A4	10			
	(I_F = 10 mA, V_{CE} = 10 V, T_A = -55°C)		4N35 4N36 4N37	40			
	(I_F = 10 mA, V_{CE} = 10 V, T_A = +100°C)		4N35 4N36 4N37	40			
Collector-Emitter Saturation Voltage	(I_C = 2 mA, I_F = 50 mA)	$V_{CE\ (SAT)}$	4N25 4N26 4N27 4N28			0.5	V
	(I_C = 0.5 mA, I_F = 10 mA)		4N35 4N36 4N37			0.3	
			H11A1 H11A2 H11A3 H11A4 H11A5			0.4	
AC Characteristic							
Non-Saturated Turn-on Time	(I_F = 10 mA, V_{CC} = 10 V, R_L = 100Ω) (Fig.20)	T_{ON}	4N25 4N26 4N27 4N28 H11A1 H11A2 H11A3 H11A4 H11A5		2		µs
Non Saturated Turn-on Time	(I_C = 2 mA, V_{CC} = 10 V, R_L = 100Ω) (Fig.20)	T_{ON}	4N35 4N36 4N37		2	10	µs

© 2005 Fairchild Semiconductor Corporation

TRANSFER CHARACTERISTICS (T_A = 25°C Unless otherwise specified.) (Continued)

AC Characteristic	Test Conditions	Symbol	Device	Min	Typ*	Max	Unit
Turn-off Time	(I_F = 10 mA, V_{CC} = 10 V, R_L = 100Ω) (Fig.20)	T_{OFF}	4N25 4N26 4N27 4N28 H11A1 H11A2 H11A3 H11A4 H11A5		2		μs
	(I_C = 2 mA, V_{CC} = 10 V, R_L = 100Ω) (Fig.20)		4N35 4N36 4N37		2	10	

* Typical values at T_A = 25°C

© 2005 Fairchild Semiconductor Corporation

TYPICAL PERFORMANCE CURVES

Fig. 1 LED Forward Voltage vs. Forward Current (Black Package)

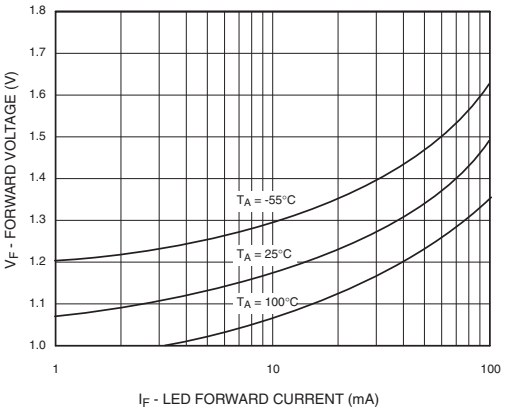

Fig. 2 LED Forward Voltage vs. Forward Current (White Package)

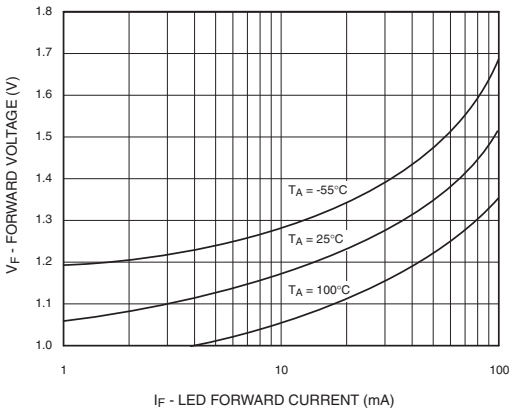

Fig.3 Normalized CTR vs. Forward Current (Black Package)

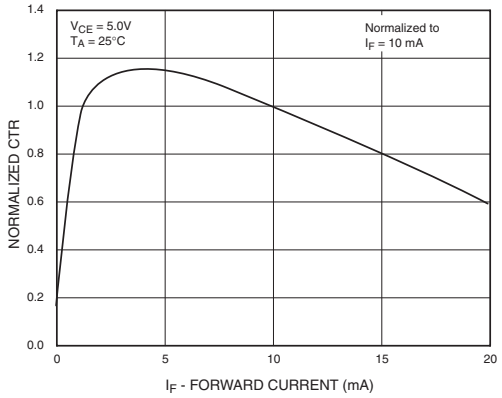

Fig.4 Normalized CTR vs. Forward Current (White Package)

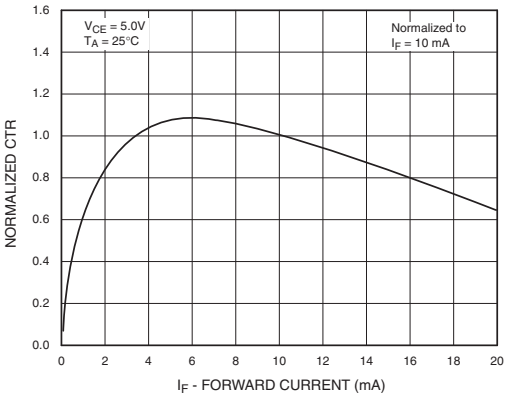

Fig. 5 Normalized CTR vs. Ambient Temperature (Black Package)

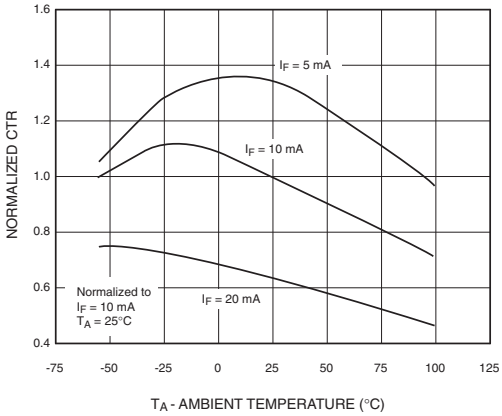

Fig. 6 Normalized CTR vs. Ambient Temperature (White Package)

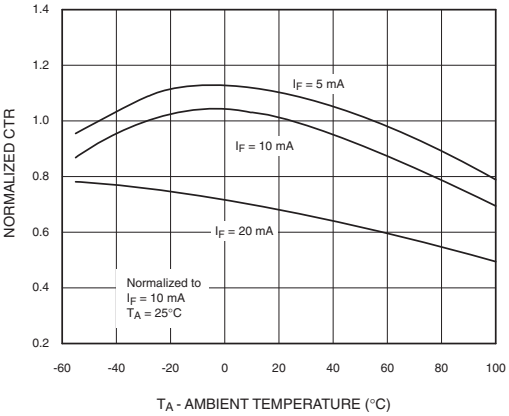

© 2005 Fairchild Semiconductor Corporation

Fig. 7 CTR vs. RBE (Unsaturated) (Black Package)

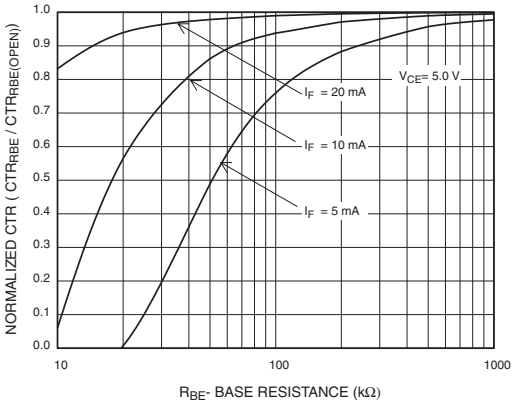

Fig. 8 CTR vs. RBE (Unsaturated) (White Package)

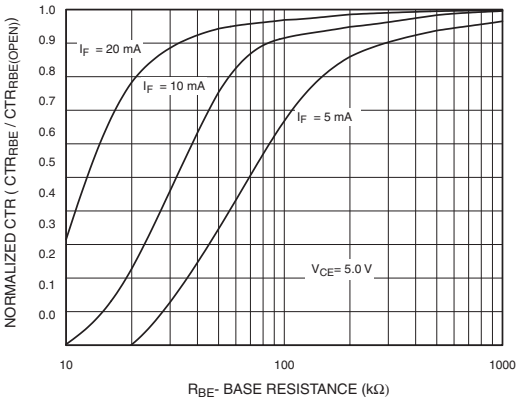

Fig. 9 CTR vs. RBE (Saturated) (Black Package)

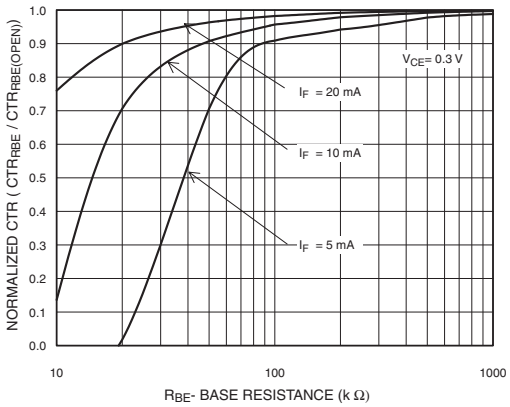

Fig. 10 CTR vs. RBE (Saturated) (White Package)

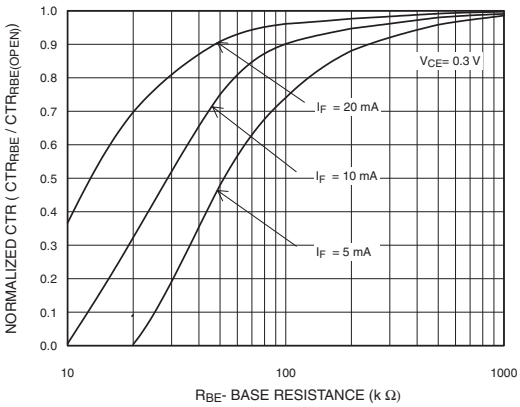

Fig. 11 Collector-Emitter Saturation Voltage vs Collector Current (Black Package)

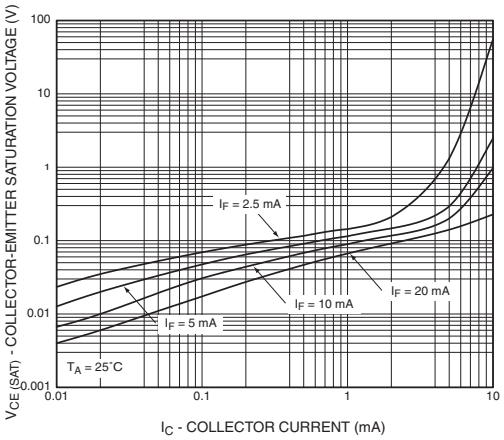

Fig. 12 Collector-Emitter Saturation Voltage vs Collector Current (White Package)

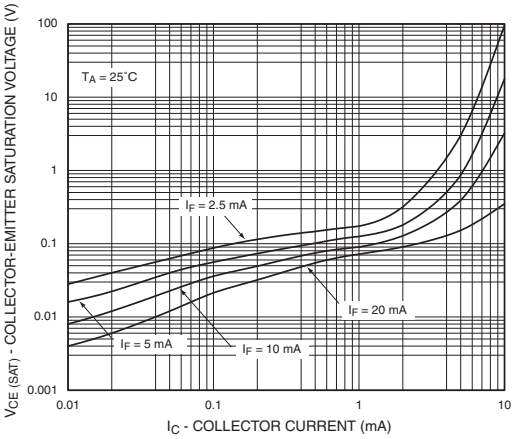

© 2005 Fairchild Semiconductor Corporation

Fig. 13 Switching Speed vs. Load Resistor (Black Package)

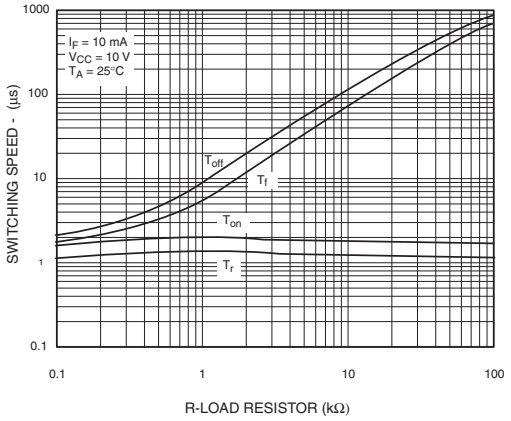

Fig. 14 Switching Speed vs. Load Resistor (White Package)

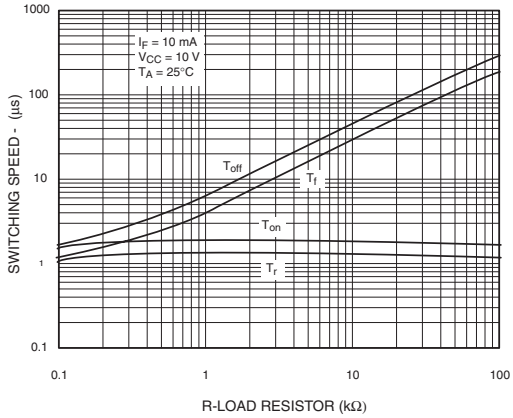

Fig. 15 Normalized t_{on} vs. R_{BE} (Black Package)

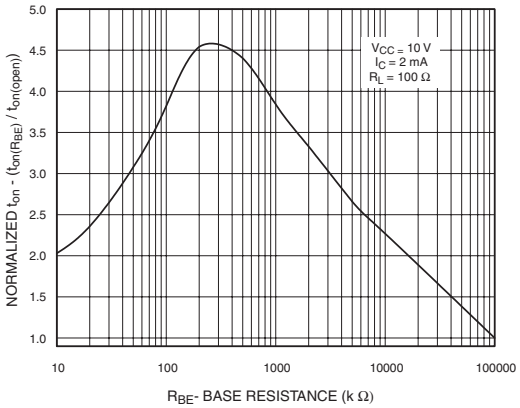

Fig. 16 Normalized t_{on} vs. R_{BE} (White Package)

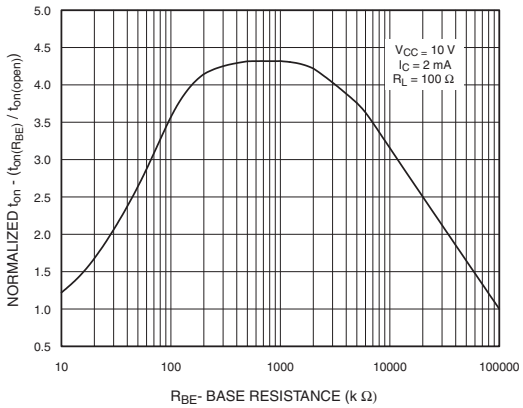

Fig. 17 Normalized t_{off} vs. R_{BE} (Black Package)

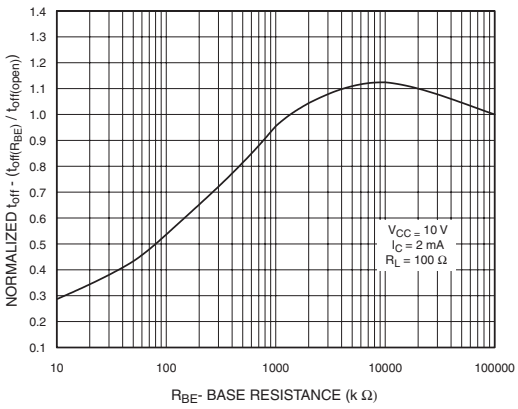

Fig. 18 Normalized t_{off} vs. R_{BE} (White Package)

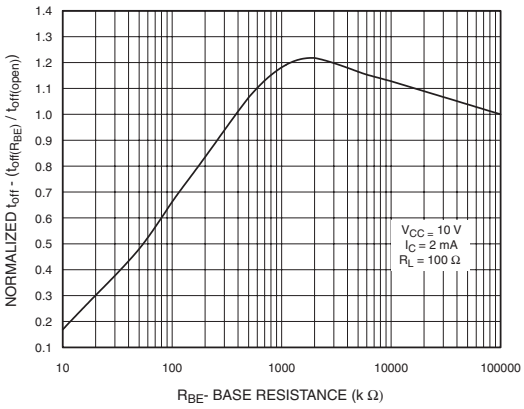

© 2005 Fairchild Semiconductor Corporation

Fig. 19 Dark Current vs. Ambient Temperature

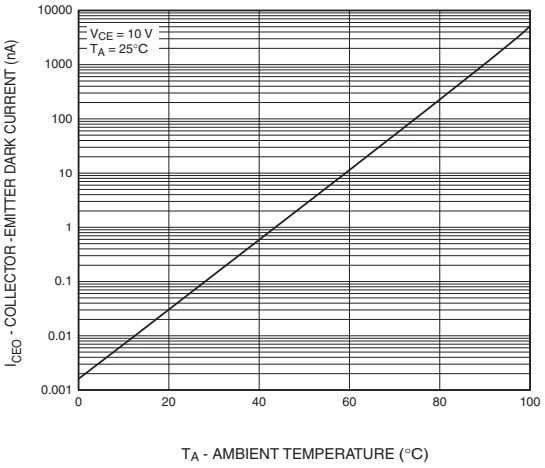

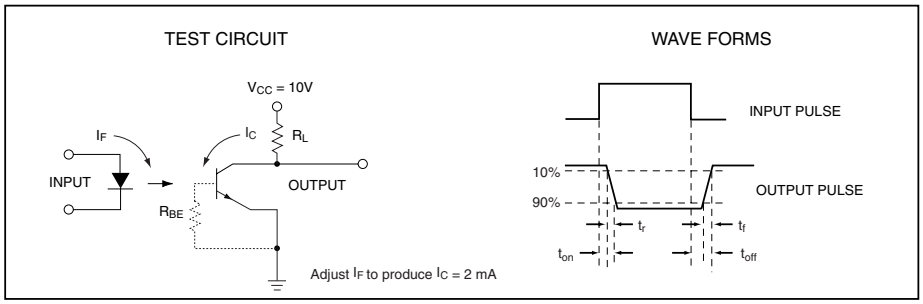

Figure 20. Switching Time Test Circuit and Waveforms

4N25	4N26	4N27	4N28	4N35	4N36
4N37	H11A1	H11A2	H11A3	H11A4	H11A5

Black Package (No -M Suffix)

Package Dimensions (Through Hole)

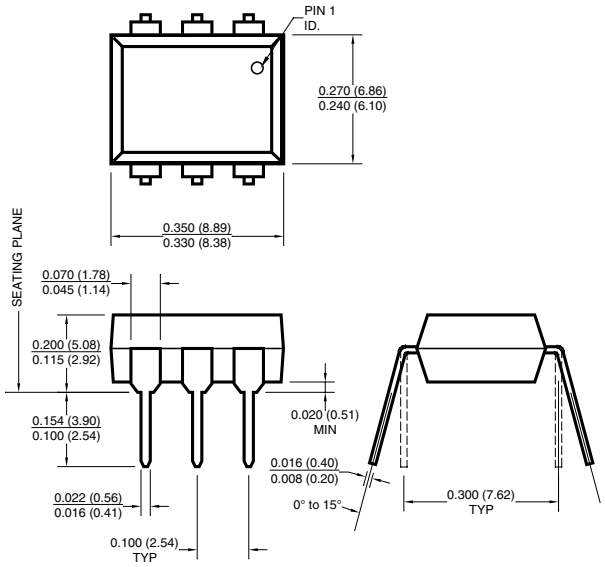

Package Dimensions (Surface Mount)

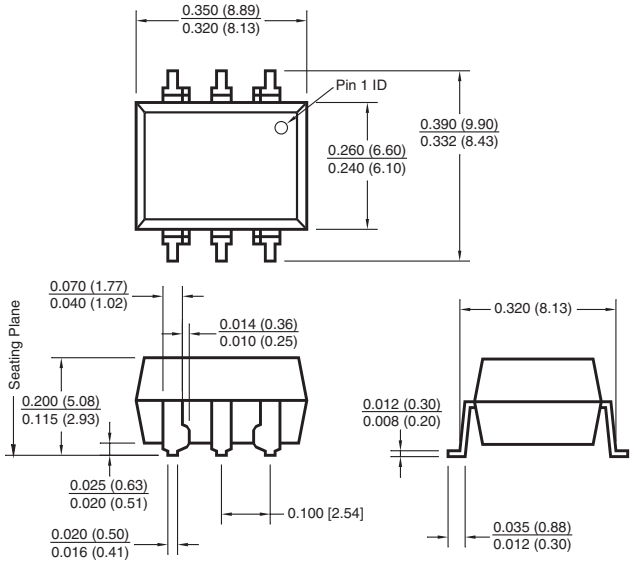

Package Dimensions (0.4" Lead Spacing)

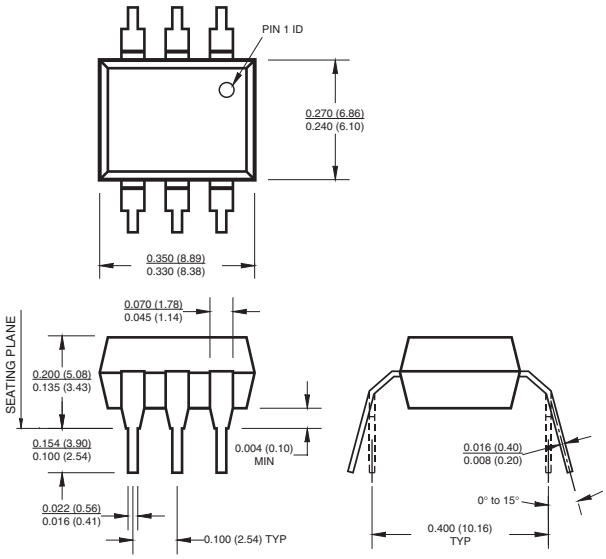

Recommended Pad Layout for Surface Mount Leadform

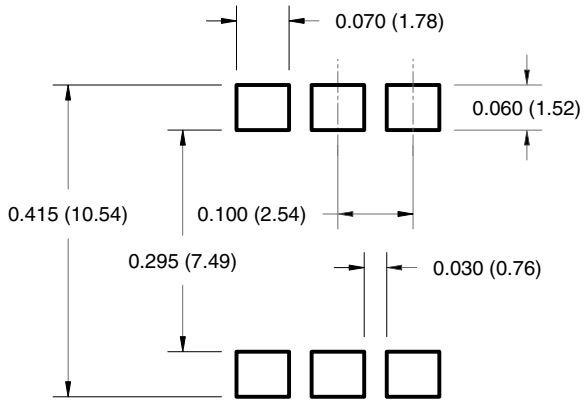

NOTE
All dimensions are in inches (millimeters)

© 2005 Fairchild Semiconductor Corporation

White Package (-M Suffix)

Package Dimensions (Through Hole)

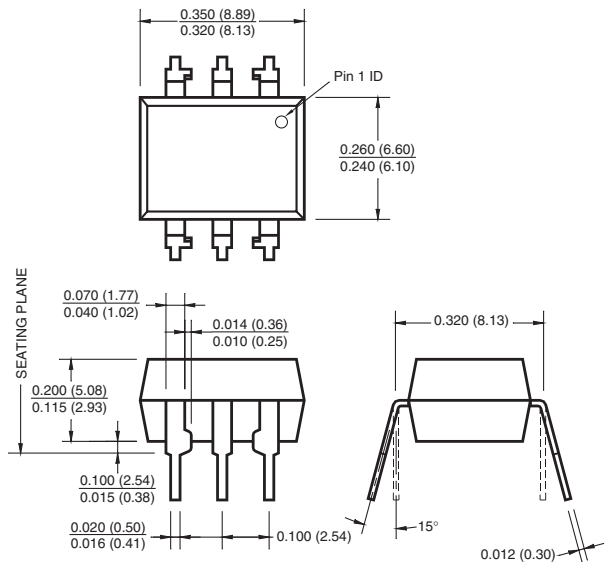

Package Dimensions (Surface Mount)

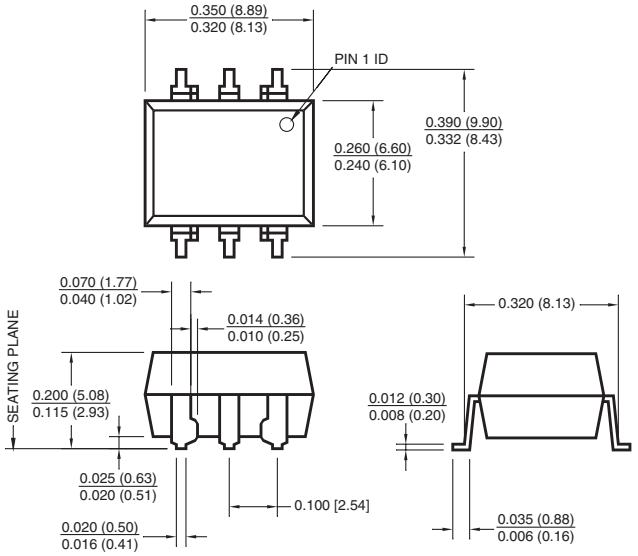

Package Dimensions (0.4" Lead Spacing)

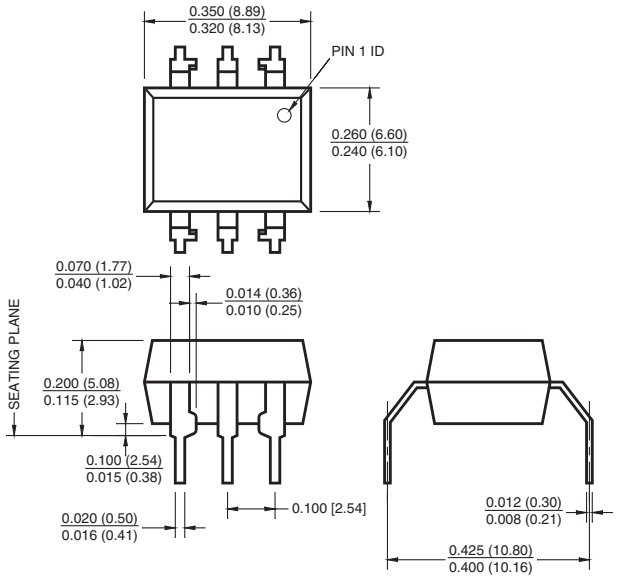

Recommended Pad Layout for Surface Mount Leadform

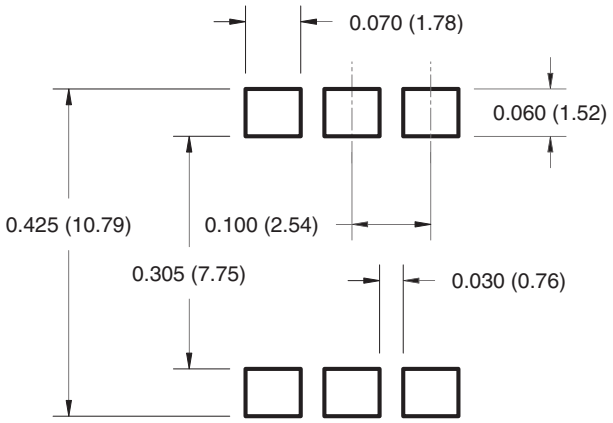

NOTE
All dimensions are in inches (millimeters)

© 2005 Fairchild Semiconductor Corporation

ORDERING INFORMATION

Order Entry Identifier		
Black Package (No Suffix)	**White Package (-M Suffix)**	**Option**
.S	S	Surface Mount Lead Bend
.SD	SR2	Surface Mount; Tape and reel
.W	T	0.4" Lead Spacing
.300	V	VDE 0884
.300W	TV	VDE 0884, 0.4" Lead Spacing
.3S	SV	VDE 0884, Surface Mount
.3SD	SR2V	VDE 0884, Surface Mount, Tape & Reel

MARKING INFORMATION

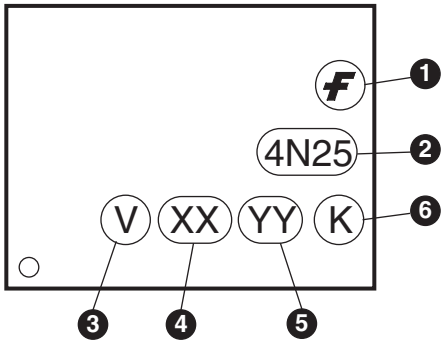

Black Package, No Suffix

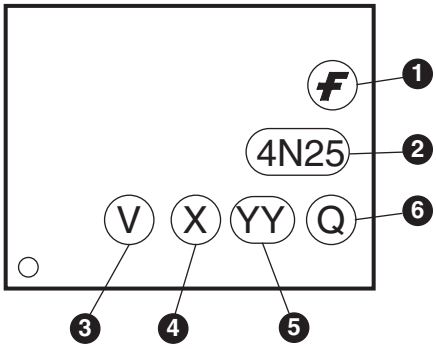

White Package, -M Suffix

Definitions	
1	Fairchild logo
2	Device number
3	VDE mark (Note: Only appears on parts ordered with VDE option – See order entry table)
4	One or two digit year code • Two digits for black package parts, e.g., '03' • One digit for white package parts, e.g., '3'
5	Two digit work week ranging from '01' to '53'
6	Assembly package code

*Note – Parts built in the white package (M suffix) that do not have the 'V' option (see definition 3 above) that are marked with date code '325' or earlier are marked in the portrait format.

© 2005 Fairchild Semiconductor Corporation

QT Carrier Tape Specifications (Black Package, No Suffix)

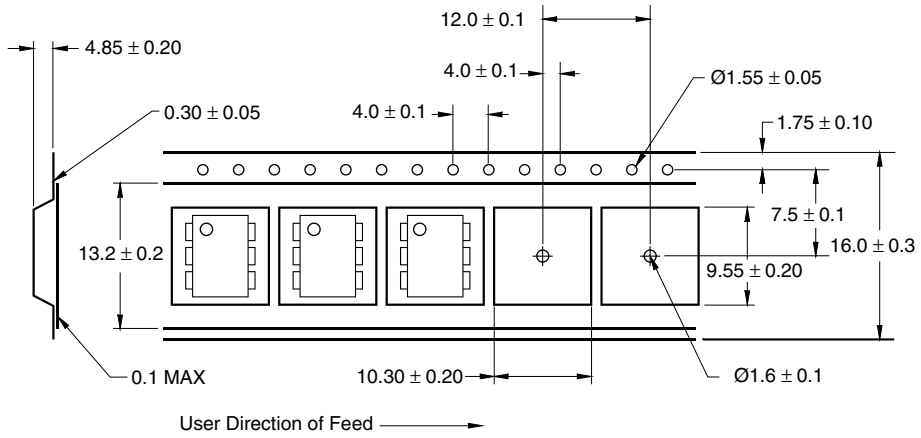

QT Carrier Tape Specifications (White Package, -M Suffix)

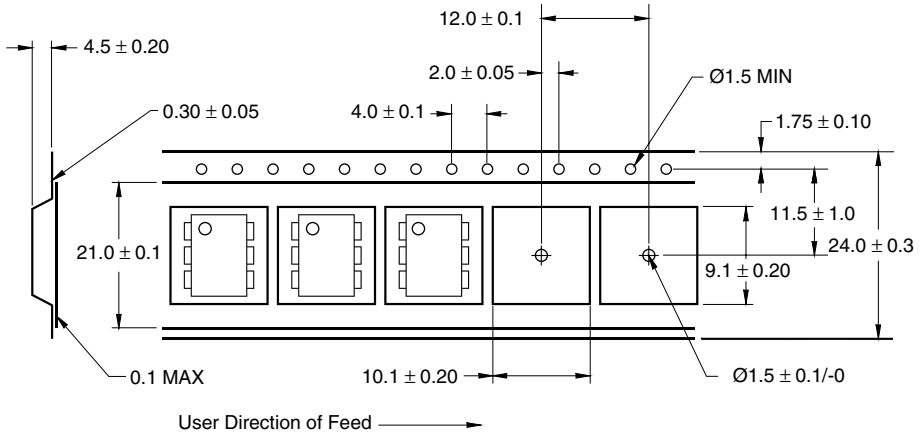

Reflow Profile (White Package, -M Suffix)

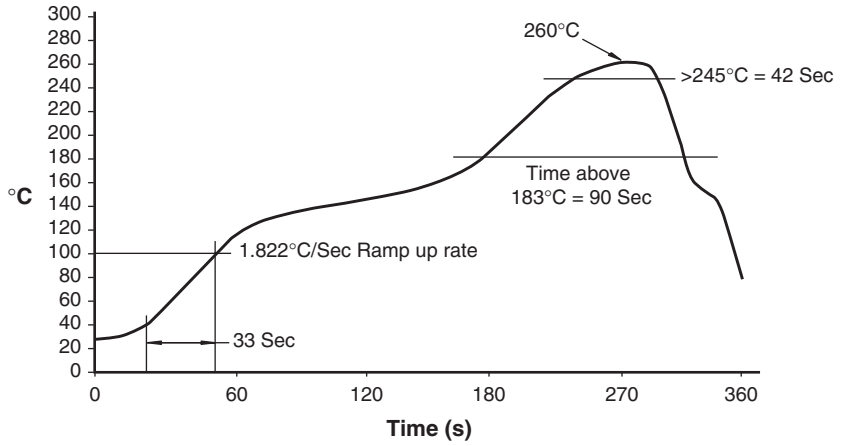

Reflow Profile (Black Package, No Suffix)

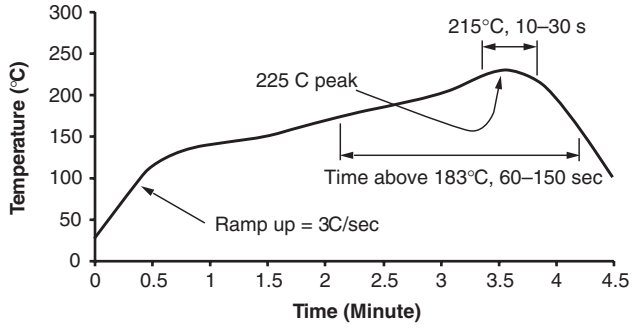

- Peak reflow temperature: 225°C (package surface temperature)
- Time of temperature higher than 183°C for 60–150 seconds
- One time soldering reflow is recommended

DISCLAIMER

FAIRCHILD SEMICONDUCTOR RESERVES THE RIGHT TO MAKE CHANGES WITHOUT FURTHER NOTICE TO ANY PRODUCTS HEREIN TO IMPROVE RELIABILITY, FUNCTION OR DESIGN. FAIRCHILD DOES NOT ASSUME ANY LIABILITY ARISING OUT OF THE APPLICATION OR USE OF ANY PRODUCT OR CIRCUIT DESCRIBED HEREIN; NEITHER DOES IT CONVEY ANY LICENSE UNDER ITS PATENT RIGHTS, NOR THE RIGHTS OF OTHERS.

LIFE SUPPORT POLICY

FAIRCHILD'S PRODUCTS ARE NOT AUTHORIZED FOR USE AS CRITICAL COMPONENTS IN LIFE SUPPORT DEVICES OR SYSTEMS WITHOUT THE EXPRESS WRITTEN APPROVAL OF THE PRESIDENT OF FAIRCHILD SEMICONDUCTOR CORPORATION. As used herein:

1. Life support devices or systems are devices or systems which, (a) are intended for surgical implant into the body, or (b) support or sustain life, and (c) whose failure to perform when properly used in accordance with instructions for use provided in the labeling, can be reasonably expected to result in a significant injury of the user.
2. A critical component in any component of a life support device or system whose failure to perform can be reasonably expected to cause the failure of the life support device or system, or to affect its safety or effectiveness.

Мы молодая и активно развивающаяся компания в области поставок электронных компонентов. Мы поставляем электронные компоненты отечественного и импортного производства напрямую от производителей и с крупнейших складов мира.

Благодаря сотрудничеству с мировыми поставщиками мы осуществляем комплексные и плановые поставки широчайшего спектра электронных компонентов.

Собственная эффективная логистика и склад в обеспечивает надежную поставку продукции в точно указанные сроки по всей России.

Мы осуществляем техническую поддержку нашим клиентам и предпродажную проверку качества продукции. На все поставляемые продукты мы предоставляем гарантию .

Осуществляем поставки продукции под контролем ВП МО РФ на предприятия военно-промышленного комплекса России , а также работаем в рамках 275 ФЗ с открытием отдельных счетов в уполномоченном банке. Система менеджмента качества компании соответствует требованиям ГОСТ ISO 9001.

Минимальные сроки поставки, гибкие цены, неограниченный ассортимент и индивидуальный подход к клиентам являются основой для выстраивания долгосрочного и эффективного сотрудничества с предприятиями радиоэлектронной промышленности, предприятиями ВПК и научно-исследовательскими институтами России.

С нами вы становитесь еще успешнее!

Наши контакты:

Телефон: +7 812 627 14 35

Электронная почта: sales@st-electron.ru

Адрес: 198099, Санкт-Петербург, Промышленная ул, дом № 19, литера Н, помещение 100-Н Офис 331