MHR Series – Miniature General Purpose AC LVDT

RoHS

- **Small size and low mass core**
- **High output signal**
- **Stroke ranges from ± 0.005 to ±2 inches**
- **AC operation from 2kHz to 20kHz**
- **Operating temperature up to 220°C (optional)**
- **Mild radiation resistance versions (optional)**
- **Stainless steel housing**
- **Imperial or metric threaded core**

DESCRIPTION

The legendary **MHR Series** LVDTs provide precision measurements in space restrictive applications. With a diameter of just 3/8 inch [9.5mm], and an extremely lightweight core, the MHR Series is ideal for applications where excessive core weight could influence the motion of the measurand; with less inertia, accurate measurements at higher displacement speeds are easier to achieve. The lightweight core also reduces mechanical stresses and helps preserve the structural integrity of the core actuation assembly.

The high output sensitivity resulting from the close electrical coupling between the coil and core provides ample signal for interfacing with practically all signal conditioners and conditioning circuits. The magnetic stainless steel housing provides electromagnetic and electrostatic shielding.

Available in a variety of stroke ranges from ±0.005 to ±2 inches, the MHR Series can be configured for optional mild radiation resistance (10^{12} NVT total integrated flux; 10^{7} rads Gamma). The optional high temperature operation (+220°C) is available for stroke ranges of ±0.10 inch and above *(consult factory)*. High pressure (vented case) versions are also available *(consult factory)*. The MHR Series is compatible with the full line of Measurement Specialties LVDT signal conditioners.

Like in most of our LVDTs, the MHR windings are vacuum impregnated with a specially formulated, high temperature, flexible resin, and the coil assembly is potted inside its housing with a two-component epoxy. This provides excellent protection against hostile environments such as high humidity, vibration and shock.

Measurement Specialties, Inc. (NASDAQ MEAS) offers many other types of sensors and signal conditioners. Data sheets can be downloaded from our web site at: http://www.meas-spec.com/datasheets.aspx

*MEAS acquired Schaevitz Sensors and the **Schaevitz**® trademark in 2000.*

FEATURES

- Compact size
- Lightweight / low mass core
- ±0.25% linearity (100% stroke)
- Shock and vibration tolerant
- Mild radiation resistance (optional)
- Calibration certificate supplied with each unit

APPLICATIONS

- X, Y, Z stage position feedback
- Wire-die bonding machines
- Cylinder position feedback
- Voice coil testing
- Materials testing machines
- Space restricted installations

MHR Series – Miniature General Purpose AC LVDT

PERFORMANCE SPECIFICATIONS

ELECTRICAL SPECIFICATIONS (common)	
Input voltage	3 VRMS sine wave
Input frequency	2kHz to 20kHz
Test frequency	2.5kHz (standard)

ELECTRICAL SPECIFICATIONS @ 10kHz (recommended operation)									
Parameter	**MHR 005**	**MHR 010**	**MHR 025**	**MHR 050**	**MHR 100**	**MHR 250**	**MHR 500**	**MHR 1000**	**MHR 2000**
Stroke range	±0.005 [±0.13]	±0.010 [±0.25]	±0.025 [±0.64]	±0.05 [±1.27]	±0.10 [±2.54]	±0.25 [±6.35]	±0.5 [±12.7]	±1 [±25.4]	±2 [±50.8]
Sensitivity V/V/inch [mV/V/mm]	8.70 [343]	6.05 [238]	8.10 [319]	3.15 [124]	2.80 [110]	2.07 [81.5]	1.96 [77.2]	0.77 [30.3]	0.49 [19.3]
Output at stroke ends, mV/V (*)	43.5	60.5	202.5	157.5	280	517.5	980	770	980
Phase shift	+38°	+20°	+15°	+8°	+5°	+7°	+4°	-1°	-16°
Input impedance (PRIMARY)	84Ω	165Ω	238Ω	419Ω	400Ω	345Ω	264Ω	155Ω	504Ω
Output impedance (SECONDARY).	302Ω	300Ω	485Ω	154Ω	200Ω	420Ω	810Ω	450Ω	1780Ω
Non-linearity	±% of FR								
@ 50% stroke	0.20	0.10	0.15	0.15	0.15	0.15	0.15	0.20	/
@100% stroke (maximum)	**0.25**	**0.25**	**0.25**	**0.25**	**0.25**	**0.25**	**0.25**	**0.25**	**0.50**
@125% stroke	0.30	0.35	0.25	0.35	0.25	0.35	0 .30	0 .50	/
@150% stroke	0.40	0.35	0.30	0.50	0.30	0.50	0.75	/	/
Null voltage (max.)	5% FSO	1% FSO	0.5% of FSO						

ELECTRICAL SPECIFICATIONS @ 2.5kHz (standard calibration)									
Parameter	**MHR 005**	**MHR 010**	**MHR 025**	**MHR 050**	**MHR 100**	**MHR 250**	**MHR 500**	**MHR 1000**	**MHR 2000**
Stroke range	±0.005 [±0.13]	±0.010 [±0.25]	±0.025 [±0.64]	±0.05 [±1.27]	±0.10 [±2.54]	±0.25 [±6.35]	±0.5 [±12.7]	±1 [±25.4]	±2 [±50.8]
Sensitivity V/V/in [mV/V/mm]	3.19 [126]	3.36 [132]	4.36 [172]	2.55 [100]	2.40 [94]	1.73 [68]	1.60 [63]	0.70 [27]	0.47 [19]
Output at stroke ends, mV/V (*)	16	33.6	109	127.5	240	432.5	800	700	940
Phase shift	+73°	+39°	+38°	+36°	+30°	+29°	+19°	+6°	+3°
Input impedance (PRIMARY)	59Ω	78Ω	116Ω	141Ω	135Ω	147Ω	145Ω	100Ω	304Ω
Output impedance (SECONDARY)	260Ω	192Ω	286Ω	90Ω	125Ω	268Ω	445Ω	370Ω	13620Ω
Non-linearity	% of FR								
@ 50% stroke	0.20	0.10	0.15	0.15	0.15	0.15	0.15	0.20	/
@100% stroke (maximum)	**0.25**	**0.25**	**0.25**	**0.25**	**0.25**	**0.25**	**0.25**	**0.25**	**0.25**
@125% stroke	0.30	0.35	0.25	0.35	0.25	0.35	0 .30	0 .50	/
@150% stroke	0.40	0.35	0.30	0.50	0.30	0.50	0.75	/	/
Null voltage (max)	6% FSO	3% FSO	0.5% of FSO						

MHR Series – Miniature General Purpose AC LVDT

ENVIRONMENTAL SPECIFICATIONS & MATERIALS	
Operating temperature	-65°F to +300°F [-55°C to 150°C]
Shock survival	1,000 g (11ms half-sine)
Vibration tolerance	20 g up to 2KHz
Housing material	AISI 400 Series stainless steel
Electrical connection	Six lead-wires, 32 AWG stranded Copper, PTFE insulated, 1 foot [0.3m] long

Notes:
All values are nominal unless otherwise noted
Electrical specifications are for the test frequency indicated in the table
Dimensions are in inch [mm] unless otherwise noted
FR: Full Range is the stroke range, end to end; FR=2xS for ±S stroke range
FSO (Full Scale Output): Largest absolute value of the outputs measured at the ends of the range
(*) Unit for output at stroke ends is millivolt per volt of excitation (input voltage)

MECHANICAL SPECIFICATIONS

	MHR 005	MHR 010	MHR 025	MHR 050	MHR 100	MHR 250	MHR 500	MHR 1000	MHR 2000
Body length "A"	0.375 [9.5]	0.535 [13.6]	0.660 [16.8]	0.815 [20.7]	0.990 [25.1]	1.850 [47.0]	3.300 [83.82]	5.600 [142.2]	8.000 [203.2]
Core length "B"	0.180 [4.6]	0.233 [5.9]	0.400 [10.2]	0.500 [12.7]	0.625 [15.9]	1.125 [28.6]	2.000 [50.8]	3.000 [76.2]	3.00 [76.2]
Body weight, oz [g]	0.07 [2]	0.11 [3]	0.18 [5]	0.21 [6]	0.21 [6]	0.32 [9]	0.60 [17]	0.92 [26]	1.4 [40]
Core weight, oz [g]	0.004 [0.1]	0.007 [0.2]	0.016 [0.5]	0.016 [0.5]	0.025 [0.7]	0.032 [0.9]	0.056 [1.6]	0.088 [2.5]	0.088 [2.5]

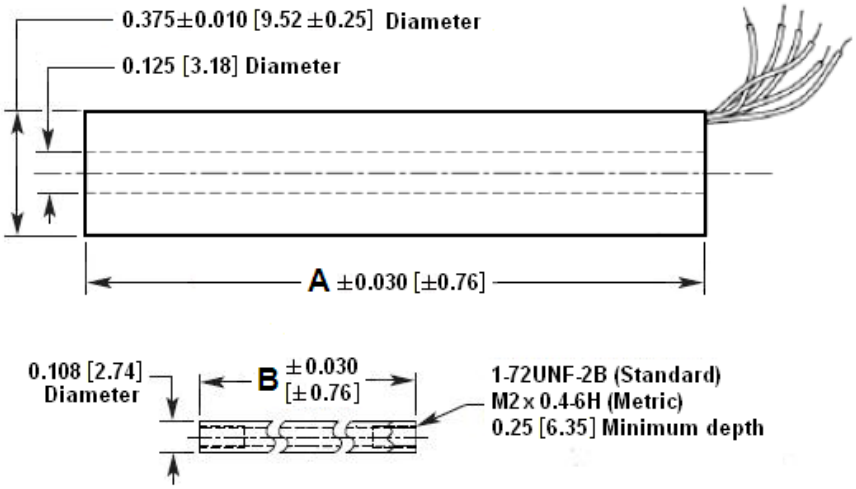

Dimensions are in inch [mm]

MHR Series – Miniature General Purpose AC LVDT

WIRING INFORMATION

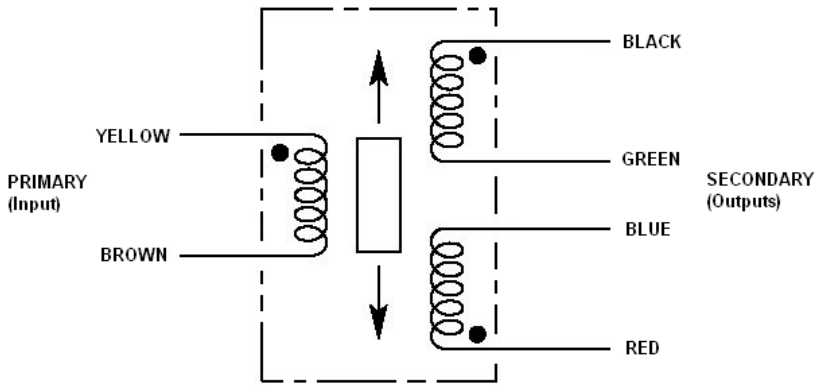

Connect Blue to Green for differential output

ORDERING INFORMATION

Description	Model	Part Number
±0.005 inch LVDT	MHR 005	02560405-000
±0.010 inch LVDT	MHR 010	02560406-000
±0.025 inch LVDT	MHR 025	02560407-000
±0.05 inch LVDT	MHR 050	02560408-000
±0.10 inch LVDT	MHR 100	02560409-000

Description	Model	Part Number
±0.25 inch LVDT	MHR 250	02560410-000
±0.5 inch LVDT	MHR 500	02560411-000
±1 inch LVDT	MHR 1000	02560412-000
±2 inch LVDT	MHR 2000	02561033-000

OPTIONS	
5.0 kHz calibration	xxxxxxxx-002
10 kHz calibration	xxxxxxxx-003
Metric threaded core	xxxxxxxx-006
Mild radiation resistance *(Consult factory)*	xxxxxxxx-080

Note: Add multiple option dash numbers together to determine proper ordering suffix
Example: MHR 1000, ±1 inch, with 5 kHz calibration and mild radiation resistance, P/N 02560412-082

ACCESSORIES	
Core connecting rod, 6 inches long, 1-72 threads	05282945-006
Core connecting rod, 12 inches long, 1-72 threads	05282945-012
Core connecting rod, 24 inches long, 1-72 threads	05282945-024
Core connecting rod, 36 inches long, 1-72 threads	05282945-036
Core connecting rod, 6 inches long, M2x0.4 metric threads	05282976-006
Core connecting rod, 12 inches long, M2x0.4 metric threads	05282976-012
Mounting block	04560954-000

Refer to our "Accessories for LVDTs" data sheet for our LVDT signal conditioning instrumentation and other accessories.

MHR Series – Miniature General Purpose AC LVDT

TECHNICAL CONTACT INFORMATION

NORTH AMERICA	EUROPE	ASIA
Measurement Specialties, Inc. 1000 Lucas Way Hampton, VA 23666 United States Phone: +1-800-745-8008 Fax: +1-757-766-4297 Email: sales@meas-spec.com Web: www.meas-spec.com	MEAS Deutschland GmbH Hauert 13 D-44227 Dortmund Germany Phone: +49-(0)231-9740-0 Fax: +49-(0)231-9740-20 Email: info.de@meas-spec.com Web: www.meas-spec.com	Measurement Specialties China Ltd. No. 26, Langshan Road High-tech Park (North) Nanshan District, Shenzhen 518057 China Phone: +86-755-33305088 Fax: +86-755-33305099 Email: info.cn@meas-spec.com Web: www.meas-spec.com

The information in this sheet has been carefully reviewed and is believed to be accurate; however, no responsibility is assumed for inaccuracies. Furthermore, this information does not convey to the purchaser of such devices any license under the patent rights to the manufacturer. Measurement Specialties, Inc. reserves the right to make changes without further notice to any product herein. Measurement Specialties, Inc. makes no warranty, representation or guarantee regarding the suitability of its product for any particular purpose, nor does Measurement Specialties, Inc. assume any liability arising out of the application or use of any product or circuit and specifically disclaims any and all liability, including without limitation consequential or incidental damages. Typical parameters can and do vary in different applications. All operating parameters must be validated for each customer application by customer's technical experts. Measurement Specialties, Inc. does not convey any license under its patent rights nor the rights of others.

Стандарт Электрон Связь

Мы молодая и активно развивающаяся компания в области поставок электронных компонентов. Мы поставляем электронные компоненты отечественного и импортного производства напрямую от производителей и с крупнейших складов мира.

Благодаря сотрудничеству с мировыми поставщиками мы осуществляем комплексные и плановые поставки широчайшего спектра электронных компонентов.

Собственная эффективная логистика и склад в обеспечивает надежную поставку продукции в точно указанные сроки по всей России.

Мы осуществляем техническую поддержку нашим клиентам и предпродажную проверку качества продукции. На все поставляемые продукты мы предоставляем гарантию .

Осуществляем поставки продукции под контролем ВП МО РФ на предприятия военно-промышленного комплекса России , а также работаем в рамках 275 ФЗ с открытием отдельных счетов в уполномоченном банке. Система менеджмента качества компании соответствует требованиям ГОСТ ISO 9001.

Минимальные сроки поставки, гибкие цены, неограниченный ассортимент и индивидуальный подход к клиентам являются основой для выстраивания долгосрочного и эффективного сотрудничества с предприятиями радиоэлектронной промышленности, предприятиями ВПК и научно-исследовательскими институтами России.

С нами вы становитесь еще успешнее!

Наши контакты:

Телефон: +7 812 627 14 35

Электронная почта: sales@st-electron.ru

Адрес: 198099, Санкт-Петербург,
Промышленная ул, дом № 19, литера Н,
помещение 100-Н Офис 331