28F010 1024K (128K X 8) CMOS FLASH MEMORY

8

- **Flash Electrical Chip-Erase**
  - **1 Second Typical Chip-Erase**
- **Quick-Pulse Programming Algorithm**
  - **10 µs Typical Byte-Program**
  - **2 Second Chip-Program**
- **100,000 Erase/Program Cycles**
- **12.0 V ±5% V_{PP}**
- **High-Performance Read**
  - **90 ns Maximum Access Time**
- **CMOS Low Power Consumption**
  - **10 mA Typical Active Current**
  - **50 µA Typical Standby Current**
  - **0 Watts Data Retention Power**
- **Integrated Program/Erase Stop Timer**
- **Command Register Architecture for Microprocessor/Microcontroller Compatible Write Interface**
- **Noise Immunity Features**
  - **±10% V_{CC} Tolerance**
  - **Maximum Latch-Up Immunity through EPI Processing**
- **ETOX™ Nonvolatile Flash Technology**
  - **EPROM-Compatible Process Base**
  - **High-Volume Manufacturing Experience**
- **JEDEC-Standard Pinouts**
  - **32-Pin Plastic Dip**
  - **32-Lead PLCC**
  - **32-Lead TSOP**

  (See Packaging Spec., Order #231369)
- **Extended Temperature Options**

Intel's 28F010 CMOS flash memory offers the most cost-effective and reliable alternative for read/write random access nonvolatile memory. The 28F010 adds electrical chip-erasure and reprogramming to familiar EPROM technology. Memory contents can be rewritten: in a test socket; in a PROM-programmer socket; on-board during subassembly test; in-system during final test; and in-system after sale. The 28F010 increases memory flexibility, while contributing to time and cost savings.

The 28F010 is a 1024 kilobit nonvolatile memory organized as 131,072 bytes of eight bits. Intel's 28F010 is offered in 32-pin plastic dip or 32-lead PLCC and TSOP packages. Pin assignments conform to JEDEC standards for byte-wide EPROMs.

Extended erase and program cycling capability is designed into Intel's ETOX™ (EPROM Tunnel Oxide) process technology. Advanced oxide processing, an optimized tunneling structure, and lower electric field combine to extend reliable cycling beyond that of traditional EEPROMs. With the 12.0 V V_{PP} supply, the 28F010 performs 100,000 erase and program cycles—well within the time limits of the quick-pulse programming and quick-erase algorithms.

Intel's 28F010 employs advanced CMOS circuitry for systems requiring high-performance access speeds, low power consumption, and immunity to noise. Its 90 ns access time provides zero wait-state performance for a wide range of microprocessors and microcontrollers. Maximum standby current of 100 µA translates into power savings when the device is deselected. Finally, the highest degree of latch-up protection is achieved through Intel's unique EPI processing. Prevention of latch-up is provided for stresses up to 100 mA on address and data pins, from –1 V to V_{CC} + 1 V.

With Intel's ETOX process technology base, the 28F010 builds on years of EPROM experience to yield the highest levels of quality, reliability, and cost-effectiveness.

December 1997

Order Number: 290207-012

Information in this document is provided in connection with Intel products. No license, express or implied, by estoppel or otherwise, to any intellectual property rights is granted by this document. Except as provided in Intel's Terms and Conditions of Sale for such products, Intel assumes no liability whatsoever, and Intel disclaims any express or implied warranty, relating to sale and/or use of Intel products including liability or warranties relating to fitness for a particular purpose, merchantability, or infringement of any patent, copyright or other intellectual property right. Intel products are not intended for use in medical, life saving, or life sustaining applications.

Intel may make changes to specifications and product descriptions at any time, without notice.

The 28F010 may contain design defects or errors known as errata. Current characterized errata are available on request.

Contact your local Intel sales office or your distributor to obtain the latest specifications and before placing your product order.

Copies of documents which have an ordering number and are referenced in this document, or other Intel literature, may be obtained from:

Intel Corporation
P.O. Box 5937
Denver, CO 80217-9808

or call 1-800-548-4725
or visit Intel's website at http://www.intel.com

Copyright © Intel Corporation 1996, 1997.

* Third-party brands and names are the property of their respective owners.

CONTENTS

PAGE

1.0 APPLICATIONS 5

2.0 PRINCIPLES OF OPERATION 8
2.1 Integrated Stop Timer 8
2.2 Write Protection 9
2.2.1 Bus Operations..... 9
2.2.1.1 Read..... 9
2.2.1.2 Output Disable 9
2.2.1.3 Standby 10
2.2.1.4 Intelligent Identifier Operation 10
2.2.1.5 Write 10
2.2.2 Command Definitions 10
2.2.2.1 Read Command..... 11
2.2.2.2 Intelligent Identifier Command 11
2.2.2.3 Set-Up Erase/Erase Commands ... 12
2.2.2.4 Erase Verify Command..... 12
2.2.2.5 Set-Up Program/Program Commands 12
2.2.2.6 Program Verify Command 12
2.2.2.7 Reset Command..... 13
2.2.3 Extended Erase/Program Cycling..... 13
2.2.4 Quick-Pulse Programming Algorithm ... 13
2.2.5 Quick-Erase Algorithm..... 13

3.0 DESIGN CONSIDERATIONS 16
3.1 Two-Line Output Control 16
3.2 Power Supply Decoupling 16
3.3 V_{PP} Trace on Printed Circuit Boards..... 16
3.4 Power-Up/Down Protection 16
3.5 28F010 Power Dissipation 16

PAGE

4.0 ELECTRICAL SPECIFICATIONS..... 18
4.1 Absolute Maximum Ratings..... 18
4.2 Operating Conditions..... 18
4.3 Capacitance 18
4.4 DC Characteristics—TTL/NMOS Compatible—Commercial Products..... 19
4.5 DC Characteristics—CMOS Compatible—Commercial Products 20
4.6 DC Characteristics—TTL/NMOS Compatible—Extended Temperature Products 22
4.7 DC Characteristics—CMOS Compatible—Extended Temperature Products 23
4.8 AC Characteristics—Read-Only Operations—Commercial and Extended Temperature Products..... 25
4.9 AC Characteristics—Write/Erase/Program Only Operations —Commercial and Extended Temperature Products 27
4.10 AC Characteristics—Alternative CE#-Controlled Writes— Commercial and Extended Temperature..... 31
4.11 Erase and Programming Performance..... 32

5.0 ORDERING INFORMATION..... 33

6.0 ADDITIONAL INFORMATION 33

REVISION HISTORY

Number	Description
-007	Removed **200 ns** Speed Bin Revised Erase Maximum Pulse Count for Figure 4 from **3000** to **1000** Clarified AC and DC Test Conditions Added “dimple” to F TSOP Package Corrected Serpentine Layout
-008	Corrected AC Waveforms Added Extended Temperature Options
-009	Added 28F010-65 and 28F010-90 speeds Revised Symbols, i.e., $\overline{CE}$, $\overline{OE}$, etc. to CE#, OE#, etc.
-010	Completion of Read Operation Table Labelling of Program Time in Erase/Program Table Textual Changes or Edits Corrected Erase/Program Times
-011	Minor changes throughout document
-012	Removed 65 ns speed bin Removed TSOP package Added Extended Temperature options Modified *AC Test Conditions* Modified *AC Characteristics*

1.0 APPLICATIONS

The 28F010 flash memory provides nonvolatility along with the capability to perform over 100,000 electrical chip-erasure/reprogram cycles. These features make the 28F010 an innovative alternative to disk, EEPROM, and battery-backed static RAM. Where periodic updates of code and data tables are required, the 28F010's reprogrammability and nonvolatility make it the obvious and ideal replacement for EPROM.

Primary applications and operating systems stored in flash eliminate the slow disk-to-DRAM download process. This results in dramatic enhancement of performance and substantial reduction of power consumption—a consideration particularly important in portable equipment. Flash memory increases flexibility with electrical chip erasure and in-system update capability of operating systems and application code. With updatable code, system manufacturers can easily accommodate last-minute changes as revisions are made.

In diskless workstations and terminals, network traffic reduces to a minimum and systems are instant-on. Reliability exceeds that of electro-mechanical media. Often in these environments, power interruptions force extended re-boot periods for all networked terminals. This mishap is no longer an issue if boot code, operating systems, communication protocols and primary applications are flash resident in each terminal.

For embedded systems that rely on dynamic RAM/disk for main system memory or nonvolatile backup storage, the 28F010 flash memory offers a solid state alternative in a minimal form factor. The 28F010 provides higher performance, lower power consumption, instant-on capability, and allows an "eXecute in place" (XIP) memory hierarchy for code and data table reading. Additionally, the flash memory is more rugged and reliable in harsh environments where extreme temperatures and shock can cause disk-based systems to fail.

The need for code updates pervades all phases of a system's life—from prototyping to system manufacture to after sale service. The electrical chip-erasure and reprogramming ability of the 28F010 allows in-circuit alterability; this eliminates unnecessary handling and less reliable socketed connections, while adding greater test, manufacture, and update flexibility.

Material and labor costs associated with code changes increases at higher levels of system integration—the most costly being code updates after sale. Code "bugs," or the desire to augment system functionality, prompt after sale code updates. Field revisions to EPROM-based code requires the removal of EPROM components or entire boards. With the 28F010, code updates are implemented locally via an edge connector, or remotely over a communcation link.

For systems currently using a high-density static RAM/battery configuration for data accumulation, flash memory's inherent nonvolatility eliminates the need for battery backup. The concern for battery failure no longer exists, an important consideration for portable equipment and medical instruments, both requiring continuous performance. In addition, flash memory offers a considerable cost advantage over static RAM.

Flash memory's electrical chip erasure, byte programmability and complete nonvolatility fit well with data accumulation and recording needs. Electrical chip-erasure gives the designer a "blank slate" in which to log or record data. Data can be periodically off-loaded for analysis and the flash memory erased producing a new "blank slate."

A high degree of on-chip feature integration simplifies memory-to-processor interfacing. Figure 3 depicts two 28F010s tied to the 80C186 system bus. The 28F010's architecture minimizes interface circuitry needed for complete in-circuit updates of memory contents.

The outstanding feature of the TSOP (Thin Small Outline Package) is the 1.2 mm thickness. TSOP is particularly suited for portable equipment and applications requiring large amounts of flash memory.

With cost-effective in-system reprogramming, extended cycling capability, and true nonvolatility, the 28F010 offers advantages to the alternatives: EPROMs, EEPROMs, battery backed static RAM, or disk. EPROM-compatible read specifications, straightforward interfacing, and in-circuit alterability offers designers unlimited flexibility to meet the high standards of today's designs.

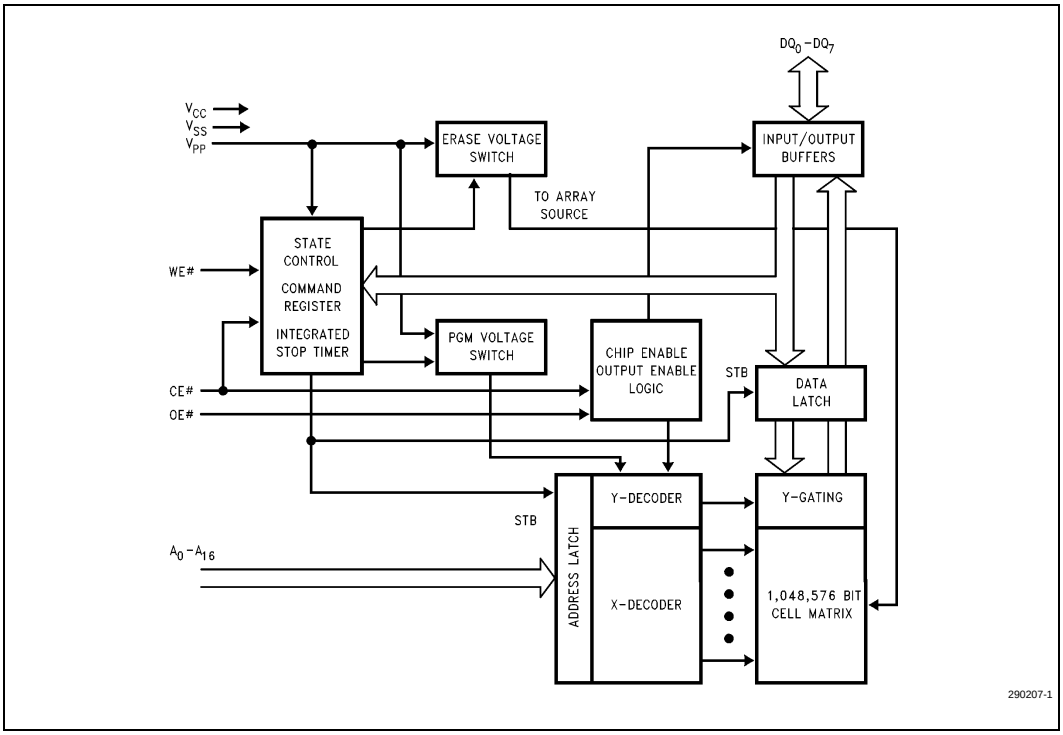

Figure 1. 28F010 Block Diagram

Table 1. Pin Description

Symbol	Type	Name and Function
A_0–A_{16}	INPUT	**ADDRESS INPUTS** for memory addresses. Addresses are internally latched during a write cycle.
DQ_0–DQ_7	INPUT/OUTPUT	**DATA INPUT/OUTPUT:** Inputs data during memory write cycles; outputs data during memory read cycles. The data pins are active high and float to tri-state **off** when the chip is deselected or the outputs are disabled. Data is internally latched during a write cycle
CE#	INPUT	**CHIP ENABLE:** Activates the device's control logic, input buffers, decoders and sense amplifiers. CE# is active low; CE# high deselects the memory device and reduces power consumption to standby levels.
OE#	INPUT	**OUTPUT ENABLE:** Gates the devices output through the data buffers during a read cycle. OE# is active low.
WE#	INPUT	**WRITE ENABLE:** Controls writes to the control register and the array. Write enable is active low. Addresses are latched on the falling edge and data is latched on the rising edge of the WE# pulse. **Note:** With $V_{PP} \leq 6.5$ V, memory contents cannot be altered.

Table 1. Pin Description (Continued)

Symbol	Type	Name and Function
V_{PP}		**ERASE/PROGRAM POWER SUPPLY** for writing the command register, erasing the entire array, or programming bytes in the array.
V_{CC}		**DEVICE POWER SUPPLY** (5 V ±10%)
V_{SS}		**GROUND**
NC		**NO INTERNAL CONNECTION** to device. Pin may be driven or left floating.

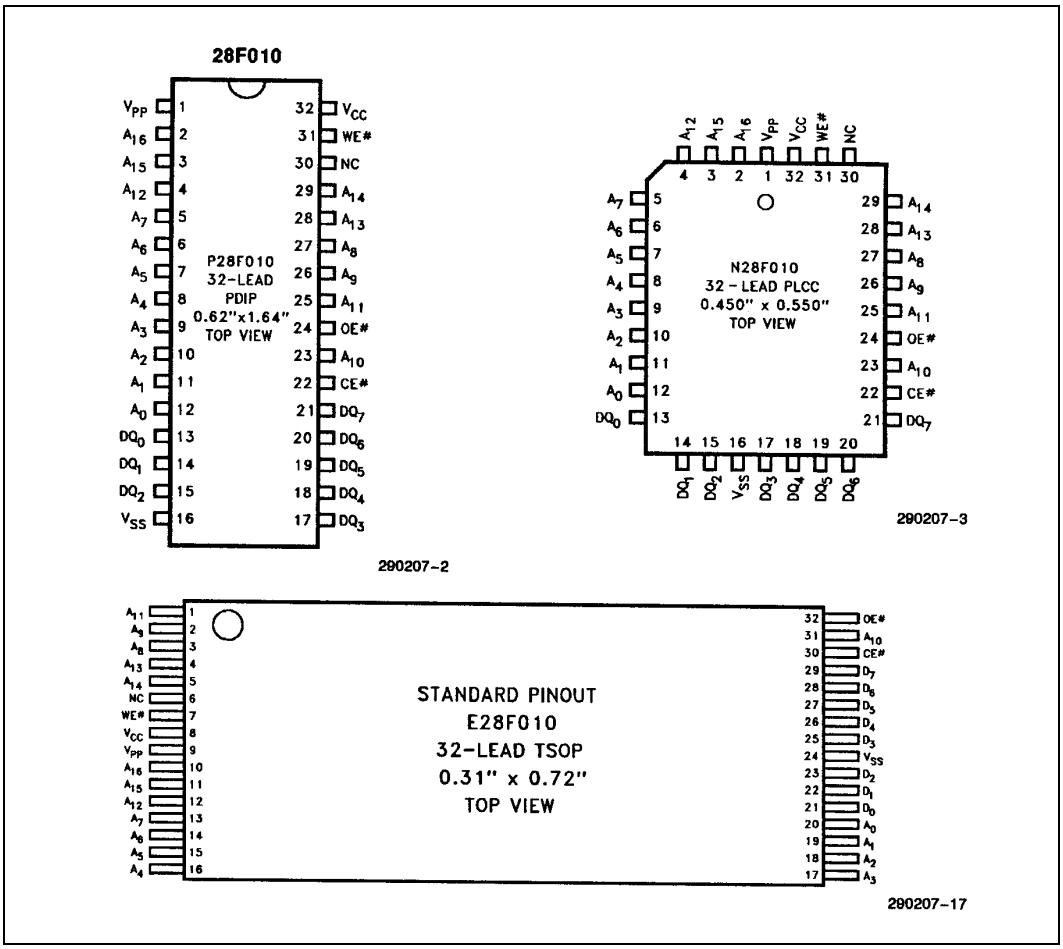

Figure 2. 28F010 Pin Configurations

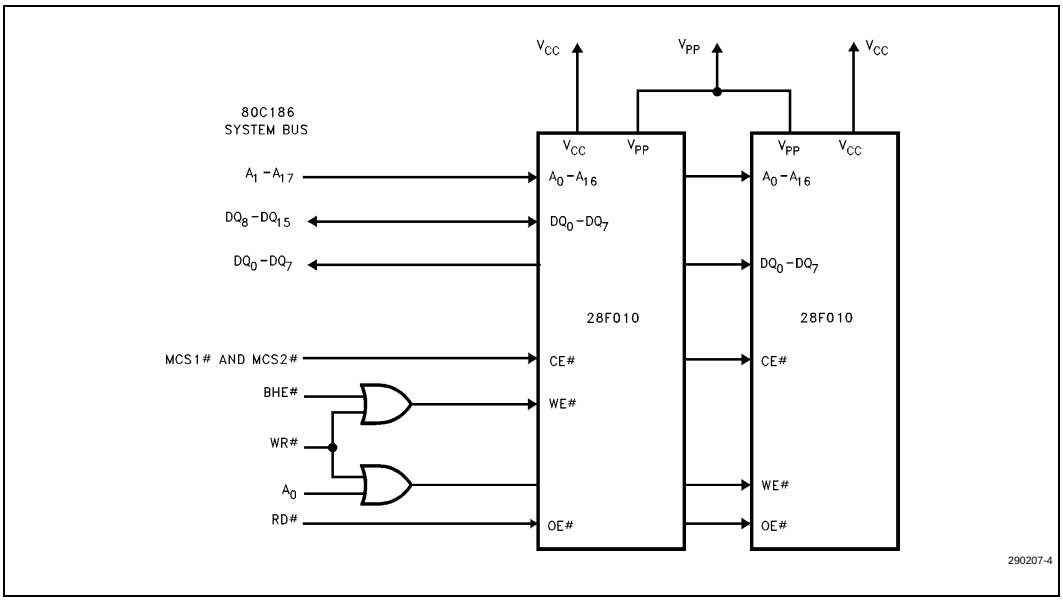

Figure 3. 28F010 in a 80C186 System

2.0 PRINCIPLES OF OPERATION

Flash memory augments EPROM functionality with in-circuit electrical erasure and reprogramming. The 28F010 introduces a command register to manage this new functionality. The command register allows for: 100% TTL-level control inputs; fixed power supplies during erasure and programming; and maximum EPROM compatibility.

In the absence of high voltage on the V_{PP} pin, the 28F010 is a read-only memory. Manipulation of the external memory control pins yields the standard EPROM read, standby, output disable, and intelligent identifier operations.

The same EPROM read, standby, and output disable operations are available when high voltage is applied to the V_{PP} pin. In addition, high voltage on V_{PP} enables erasure and programming of the device. All functions associated with altering memory contents—intelligent identifier, erase, erase verify, program, and program verify—are accessed via the command register.

Commands are written to the register using standard microprocessor write timings. Register contents serve as input to an internal state machine which controls the erase and programming circuitry. Write cycles also internally latch addresses and data needed for programming or erase operations. With the appropriate command written to the register, standard microprocessor read timings output array data, access the intelligent identifier codes, or output data for erase and program verification.

2.1 Integrated Stop Timer

Successive command write cycles define the durations of program and erase operations; specifically, the program or erase time durations are normally terminated by associated Program or Erase Verify commands. An integrated stop timer provides simplified timing control over these operations; thus eliminating the need for maximum program/erase timing specifications. Programming and erase pulse durations are minimums only. When the stop timer terminates a program or erase operation, the device enters an inactive state and remains inactive until receiving the appropriate Verify or Reset command.

Table 2. 28F010 Bus Operations

Mode		V_{PP}(1)	A_0	A_9	CE#	OE#	WE#	DQ_0–DQ_7
READ-ONLY	Read	V_{PPL}	A_0	A_9	V_{IL}	V_{IL}	V_{IH}	Data Out
	Output Disable	V_{PPL}	X	X	V_{IL}	V_{IH}	V_{IH}	Tri-State
	Standby	V_{PPL}	X	X	V_{IH}	X	X	Tri-State
	Intelligent Identifier (Mfr)(2)	V_{PPL}	V_{IL}	V_{ID}(3)	V_{IL}	V_{IL}	V_{IH}	Data = 89H
	Intelligent Identifier (Device)(2)	V_{PPL}	V_{IH}	V_{ID}(3)	V_{IL}	V_{IL}	V_{IH}	Data = B4H
READ/WRITE	Read	V_{PPH}	A_0	A_9	V_{IL}	V_{IL}	V_{IH}	Data Out(4)
	Output Disable	V_{PPH}	X	X	V_{IL}	V_{IH}	V_{IH}	Tri-State
	Standby(5)	V_{PPH}	X	X	V_{IH}	X	X	Tri-State
	Write	V_{PPH}	A_0	A_9	V_{IL}	V_{IH}	V_{IL}	Data In(6)

NOTES:

1. Refer to *DC Characteristics*. When $V_{PP} = V_{PPL}$ memory contents can be read but not written or erased.
2. Manufacturer and device codes may also be accessed via a command register write sequence. Refer to Table 3. All other addresses low.
3. V_{ID} is the intelligent identifier high voltage. Refer to *DC Characteristics*.
4. Read operations with $V_{PP} = V_{PPH}$ may access array data or the intelligent identifier codes.
5. With V_{PP} at high voltage, the standby current equals $I_{CC} + I_{PP}$ (standby).
6. Refer to Table 3 for valid data-in during a write operation.
7. X can be V_{IL} or V_{IH}.

2.2 Write Protection

The command register is only active when V_{PP} is at high voltage. Depending upon the application, the system designer may choose to make the V_{PP} power supply switchable—available only when memory updates are desired. When $V_{PP} = V_{PPL}$, the contents of the register default to the Read command, making the 28F010 a read-only memory. In this mode, the memory contents cannot be altered.

Or, the system designer may choose to “hardwire” V_{PP}, making the high voltage supply constantly available. In this case, all command register functions are inhibited whenever V_{CC} is below the write lockout voltage V_{LKO}. (See Section 3.4, *Power-Up/Down Protection*.) The 28F010 is designed to accommodate either design practice, and to encourage optimization of the processor memory interface.

The two-step program/erase write sequence to the command register provides additional software write protections.

2.2.1 BUS OPERATIONS

2.2.1.1 Read

The 28F010 has two control functions, both of which must be logically active, to obtain data at the outputs. Chip Enable (CE#) is the power control and should be used for device selection. Output Enable (OE#) is the output control and should be used to gate data from the output pins, independent of device selection. Refer to the AC read timing waveforms.

When V_{PP} is high (V_{PPH}), the read operation can be used to access array data, to output the intelligent identifier codes, and to access data for program/erase verification. When V_{PP} is low (V_{PPL}), the read operation can **only** access the array data.

2.2.1.2 Output Disable

With OE# at a logic-high level (V_{IH}), output from the device is disabled. Output pins are placed in a high-impedance state.

2.2.1.3 Standby

With CE# at a logic-high level, the standby operation disables most of the 28F010's circuitry and substantially reduces device power consumption. The outputs are placed in a high-impedance state, independent of the OE# signal. If the 28F010 is deselected during erasure, programming, or program/erase verification, the device draws active current until the operation is terminated.

2.2.1.4 Intelligent Identifier Operation

The intelligent identifier operation outputs the manufacturer code (89H) and device code (B4H). Programming equipment automatically matches the device with its proper erase and programming algorithms.

With CE# and OE# at a logic low level, raising A_9 to high voltage V_{ID} (see *DC Characteristics*) activates the operation. Data read from locations 0000H and 0001H represent the manufacturer's code and the device code, respectively.

The manufacturer and device codes can also be read via the command register, for instances where the 28F010 is erased and reprogrammed in the target system. Following a write of 90H to the command register, a read from address location 0000H outputs the manufacturer code (89H). A read from address 0001H outputs the device code (B4H).

2.2.1.5 Write

Device erasure and programming are accomplished via the command register, when high voltage is applied to the V_{PP} pin. The contents of the register serve as input to the internal state machine. The state machine outputs dictate the function of the device.

The command register itself does not occupy an addressable memory location. The register is a latch used to store the command, along with address and data information needed to execute the command.

The command register is written by bringing WE# to a logic-low level (V_{IL}), while CE# is low. Addresses are latched on the falling edge of WE#, while data is latched on the rising edge of the WE# pulse. Standard microprocessor write timings are used.

Refer to *AC Characteristics—Write/Erase/Program Only Operations* and the erase/programming waveforms for specific timing parameters.

2.2.2 COMMAND DEFINITIONS

When low voltage is applied to the V_{PP} pin, the contents of the command register default to 00H, enabling read-only operations.

Placing high voltage on the V_{PP} pin enables read/write operations. Device operations are selected by writing specific data patterns into the command register. Table 3 defines these 28F010 register commands.

Table 3. Command Definitions

Command	Bus Cycles Req'd	First Bus Cycle			Second Bus Cycle		
		Operation(1)	Address(2)	Data(3)	Operation(1)	Address(2)	Data(3)
Read Memory	1	Write	X	00H			
Read Intelligent Identifier Codes(4)	3	Write	IA	90H	Read	IA	ID
Set-Up Erase/Erase(5)	2	Write	X	20H	Write	X	20H
Erase Verify(5)	2	Write	EA	A0H	Read	X	EVD
Set-Up Program/ Program(6)	2	Write	X	40H	Write	PA	PD
Program Verify(6)	2	Write	X	C0H	Read	X	PVD
Reset(7)	2	Write	X	FFH	Write	X	FFH

NOTES:

1. Bus operations are defined in Table 2.
2. IA = Identifier address: 00H for manufacturer code, 01H for device code.
   EA = Erase Address: Address of memory location to be read during erase verify.
   PA = Program Address: Address of memory location to be programmed.
   Addresses are latched on the falling edge of the WE# pulse.
3. ID = Identifier Data: Data read from location IA during device identification (Mfr = 89H, Device = B4H).
   EVD = Erase Verify Data: Data read from location EA during erase verify.
   PD = Program Data: Data to be programmed at location PA. Data is latched on the rising edge of WE#.
   PVD = Program Verify Data: Data read from location PA during program verify. PA is latched on the Program command.
4. Following the Read Intelligent ID command, two read operations access manufacturer and device codes.
5. Figure 5 illustrates the *28F010 Quick-Erase Algorithm* flowchart.
6. Figure 4 illustrates the *28F010 Quick-Pulse Programming Algorithm* flowchart.
7. The second bus cycle must be followed by the desired command register write.

2.2.2.1 Read Command

While V_{PP} is high, for erasure and programming, memory contents can be accessed via the Read command. The read operation is initiated by writing 00H into the command register. Microprocessor read cycles retrieve array data. The device remains enabled for reads until the command register contents are altered.

The default contents of the register upon V_{PP} power-up is 00H. This default value ensures that no spurious alteration of memory contents occurs during the V_{PP} power transition. Where the V_{PP} supply is hardwired to the 28F010, the device powers-up and remains enabled for reads until the command register contents are changed. Refer to the *AC Characteristics—Read-Only Operations* and waveforms for specific timing parameters.

2.2.2.2 Intelligent Identifier Command

Flash memories are intended for use in applications where the local CPU alters memory contents. As such, manufacturer and device codes must be accessible while the device resides in the target system. PROM programmers typically access signature codes by raising A_9 to a high voltage. However, multiplexing high voltage onto address lines is not a desired system design practice.

The 28F010 contains an intelligent identifier operation to supplement traditional PROM-programming methodology. The operation is initiated by writing 90H into the command register. Following the command Write, a read cycle from address 0000H retrieves the manufacturer code of 89H. A read cycle from address 0001H returns the device code of B4H. To terminate the operation, it

is necessary to write another valid command into the register.

2.2.2.3 Set-Up Erase/Erase Commands

Set-Up Erase is a command-only operation that stages the device for electrical erasure of all bytes in the array. The set-up erase operation is performed by writing 20H to the command register.

To commence chip-erasure, the Erase command (20H) must again be written to the register. The erase operation begins with the rising edge of the WE# pulse and terminates with the rising edge of the next WE# pulse (i.e., Erase Verify command).

This two-step sequence of set-up followed by execution ensures that memory contents are not accidentally erased. Also, chip-erasure can only occur when high voltage is applied to the pin. In the absence of this high voltage, memory contents are protected against erasure. Refer to *AC Characteristics—Write/Erase/Program Only Operations* and waveforms for specific timing parameters.

2.2.2.4 Erase Verify Command

The Erase command erases all bytes of the array in parallel. After each erase operation, all bytes must be verified. The erase verify operation is initiated by writing A0H into the command register. The address for the byte to be verified must be supplied as it is latched on the falling edge of the WE# pulse. The register write terminates the erase operation with the rising edge of its WE# pulse.

The 28F010 applies an internally-generated margin voltage to the addressed byte. Reading FFH from the addressed byte indicates that all bits in the byte are erased.

The Erase Verify command must be written to the command register prior to each byte verification to latch its address. The process continues for each byte in the array until a byte does not return FFH data, or the last address is accessed.

In the case where the data read is not FFH, another erase operation is performed. (Refer Section 2.2.2.3, *Set-Up Erase/Erase Commands*.) Verification then resumes from the address of the last-verified byte. Once all bytes in the array have been verified, the erase step is complete. The device can be programmed. At this point, the verify operation is terminated by writing a valid command (e.g., Program Set-Up) to the command register. Figure 5, the *28F010 Quick-Erase Algorithm* flowchart, illustrates how commands and bus operations are combined to perform electrical erasure of the 28F010. Refer to *AC Characteristics—Write/Erase/Program Only Operations* and waveforms for specific timing parameters.

2.2.2.5 Set-Up Program/Program Commands

Set-up program is a command-only operation that stages the device for byte programming. Writing 40H into the command register performs the set-up operation.

Once the program set-up operation is performed, the next WE# pulse causes a transition to an active programming operation. Addresses are internally latched on the falling edge of the WE# pulse. Data is internally latched on the rising edge of the WE# pulse. The rising edge of WE# also begins the programming operation. The programming operation terminates with the next rising edge of WE#, used to write the Program Verify command. Refer to *AC Characteristics—Write/Erase/Program Only Operations* and Waveforms for specific timing parameters.

2.2.2.6 Program Verify Command

The 28F010 is programmed on a byte-by-byte basis. Byte programming may occur sequentially or at random. Following each programming operation, the byte just programmed must be verified.

The program verify operation is initiated by writing C0H into the command register. The register write terminates the programming operation with the rising edge of its WE# pulse. The program verify operation stages the device for verification of the byte last programmed. No new address information is latched.

The 28F010 applies an internally-generated margin voltage to the byte. A microprocessor read cycle outputs the data. A successful comparison between the programmed byte and true data means that the byte is successfully programmed. Programming then proceeds to the next desired byte location. Figure 5, the *28F010 Quick-Pulse Programming Algorithm* flowchart, illustrates how commands are combined with bus operations to perform byte

programming. Refer to *AC Characteristics—Write/Erase/Program Only Operations* and waveforms for specific timing parameters.

2.2.2.7 Reset Command

A Reset command is provided as a means to safely abort the Erase or Program command sequences. Following either Set-Up command (Erase or Program) with two consecutive writes of FFH will safely abort the operation. Memory contents will not be altered. A valid command must then be written to place the device in the desired state.

2.2.3 EXTENDED ERASE/PROGRAM CYCLING

EEPROM cycling failures have always concerned users. The high electrical field required by thin oxide EEPROMs for tunneling can literally tear apart the oxide at defect regions. To combat this, some suppliers have implemented redundancy schemes, reducing cycling failures to insignificant levels. However, redundancy requires that cell size be doubled—an expensive solution.

Intel has designed extended cycling capability into its ETOX flash memory technology. Resulting improvements in cycling reliability come without increasing memory cell size or complexity. First, an advanced tunnel oxide increases the charge carrying ability ten-fold. Second, the oxide area per cell subjected to the tunneling electric field is one-tenth that of common EEPROMs, minimizing the probability of oxide defects in the region. Finally, the peak electric field during erasure is approximately 2 MV/cm lower than EEPROM. The lower electric field greatly reduces oxide stress and the probability of failure.

The 28F010 is capable or 100,000 program/erase cycles. The device is programmed and erased using Intel's quick-pulse programming and quick-erase algorithms. Intel's algorithmic approach uses a series of operations (pulses), along with byte verification, to completely and reliably erase and program the device.

2.2.4 QUICK-PULSE PROGRAMMING ALGORITHM

The quick-pulse programming algorithm uses programming operations of 10 µs duration. Each operation is followed by a byte verification to determine when the addressed byte has been successfully programmed. The algorithm allows for up to 25 programming operations per byte, although most bytes verify on the first or second operation. The entire sequence of programming and byte verification is performed with V_{PP} at high voltage. Figure 4 illustrates the *28F010 Quick-Pulse Programming Algorithm* flowchart.

2.2.5 QUICK-ERASE ALGORITHM

Intel's quick-erase algorithm yields fast and reliable electrical erasure of memory contents. The algorithm employs a closed-loop flow, similar to the quick-pulse programming algorithm, to simultaneously remove charge from all bits in the array.

Erasure begins with a read of memory contents. The 28F010 is erased when shipped from the factory. Reading FFH data from the device would immediately be followed by device programming.

For devices being erased and reprogrammed, uniform and reliable erasure is ensured by first programming all bits in the device to their charged state (Data = 00H). This is accomplished, using the quick-pulse programming algorithm, in approximately two seconds.

Erase execution then continues with an initial erase operation. Erase verification (data = FFH) begins at address 0000H and continues through the array to the last address, or until data other than FFH is encountered. With each erase operation, an increasing number of bytes verify to the erased state. Erase efficiency may be improved by storing the address of the last byte verified in a register. Following the next erase operation, verification starts at that stored address location. Erasure typically occurs in one second. Figure 5 illustrates the *28F010 Quick-Erase Algorithm* flowchart.

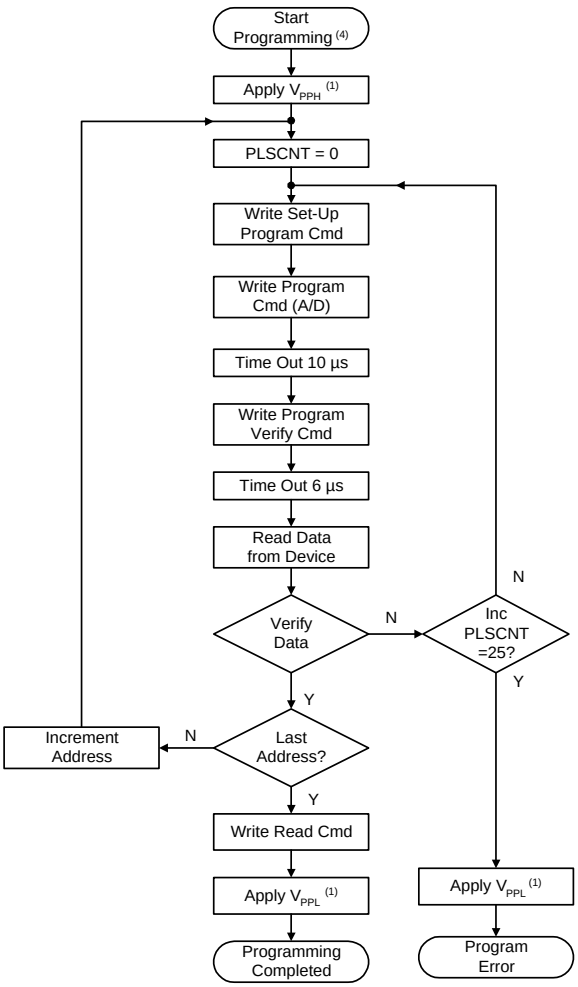

Bus Operation	Command	Comments
Standby		Wait for V_{PP} Ramp to V_{PPH}(1)
		Initialize Pulse-Count
Write	Set-Up Program	Data = 40H
Write	Program	Valid Address/Data
Standby		Duration of Program Operation (t_{WHWH1})
Write	Program Verify(2)	Data = C0H; Stops Program Operations(3)
Stand-by		t_{WHGL}
Read		Read Byte to Verify Programming
Standby		Compare Data Output to Data Expected
Write	Read	Data = 00H, Resets the Register for Read Operations
Standby		Wait for V_{PP} Ramp to V_{PPL}(1)

0207_04

NOTES:

1. See *DC Characteristics* for the value of V_{PPH} and V_{PPL}.
2. Program Verify is only performed after byte programming. A final read/compare may be performed (optional) after the register is written with the Read command.
3. Refer to *Principles of Operation*.
4. **CAUTION:** The algorithm **must be followed** to ensure proper and reliable operation of the device.

Figure 4. 28F010 Quick-Pulse Programming Algorithm

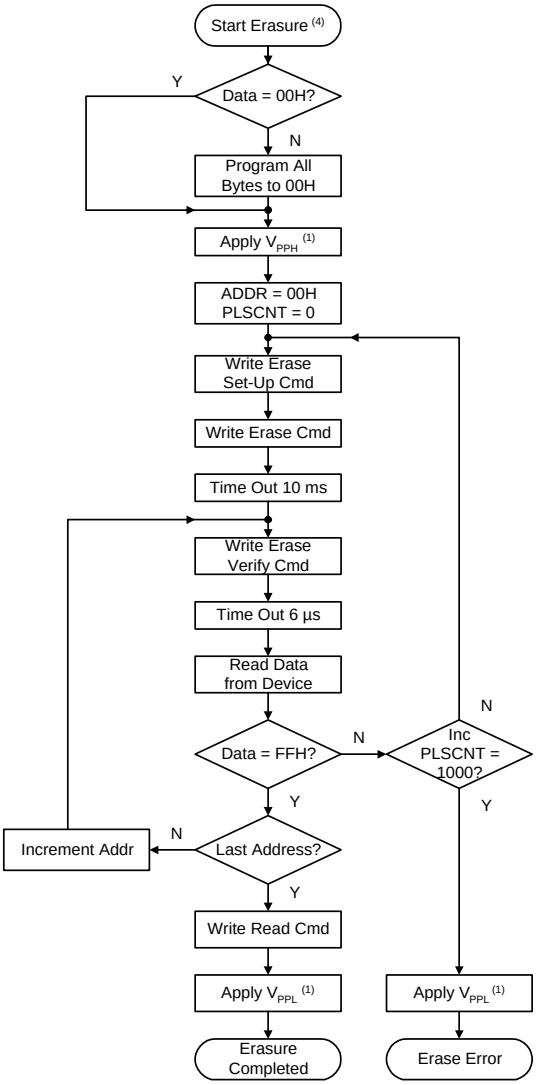

Bus Operation	Command	Comments
		Entire Memory Must = 00H Before Erasure
		Use Quick-Pulse Programming Algorithm (Figure 4)
Standby		Wait for V_{PP} Ramp to V_{PPH} (1)
		Initialize Addresses and Pulse-Count
Write	Set-Up Erase	Data = 20H
Write	Erase	Data = 20H
Stand-by		Duration of Erase Operation (t_{WHWH2})
Write	Erase (2) Verify	Addr = Byte to Verify; Data = A0H; Stops Erase Operation(3)
Standby		t_{WHGL}
Read		Read Byte to Verify Erasure
Standby		Compare Output to FFH Increment Pulse-Count
Write	Read	Data = 00H, Resets the Register for Read Operations
Standby		Wait for V_{PP} Ramp to V_{PPL} (1)

0207_05

NOTES:

1. See *DC Characteristics* for the value of V_{PPH} and V_{PPL}.
2. Erase Verify is performed only after chip-erasure. A final read/compare may be performed (optional) after the register is written with the Read command.
3. Refer to *Principles of Operation*.
4. **CAUTION:** The algorithm **must be followed** to ensure proper and reliable operation of the device.

Figure 5. 28F010 Quick-Erase Algorithm

3.0 DESIGN CONSIDERATIONS

3.1 Two-Line Output Control

Flash memories are often used in larger memory arrays. Intel provides two read control inputs to accommodate multiple memory connections. Two-line control provides for:

a. the lowest possible memory power dissipation and,

b. complete assurance that output bus contention will not occur.

To efficiently use these two control inputs, an address decoder output should drive chip-enable, while the system's read signal controls all flash memories and other parallel memories. This assures that only enabled memory devices have active outputs, while deselected devices maintain the low power standby condition.

3.2 Power Supply Decoupling

Flash memory power-switching characteristics require careful device decoupling. System designers are interested in three supply current (I_{CC}) issues—standby, active, and transient current peaks produced by falling and rising edges of chip-enable. The capacitive and inductive loads on the device outputs determine the magnitudes of these peaks.

Two-line control and proper decoupling capacitor selection will suppress transient voltage peaks. Each device should have a 0.1 µF ceramic capacitor connected between V_{CC} and V_{SS}, and between V_{PP} and V_{SS}.

Place the high-frequency, low-inherent inductance capacitors as close as possible to the devices. Also, for every eight devices, a 4.7 µF electrolytic capacitor should be placed at the array's power supply connection, between V_{CC} and V_{SS}. The bulk capacitor will overcome voltage slumps caused by printed circuit board trace inductance, and will supply charge to the smaller capacitors as needed.

3.3 V_{PP} Trace on Printed Circuit Boards

Programming flash memories, while they reside in the target system, requires that the printed circuit board designer pay attention to the V_{PP} power supply trace. The V_{PP} pin supplies the memory cell current for programming. Use similar trace widths and layout considerations given the V_{CC} power bus. Adequate V_{PP} supply traces and decoupling will decrease V_{PP} voltage spikes and overshoots.

3.4 Power-Up/Down Protection

The 28F010 is designed to offer protection against accidental erasure or programming during power transitions. Upon power-up, the 28F010 is indifferent as to which power supply, V_{PP} or V_{CC}, powers up first. Power supply sequencing is not required. Internal circuitry in the 28F010 ensures that the command register is reset to the read mode on power-up.

A system designer must guard against active writes for V_{CC} voltages above V_{LKO} when V_{PP} is active. Since both WE# and CE# must be low for a command write, driving either to V_{IH} will inhibit writes. The control register architecture provides an added level of protection since alteration of memory contents only occurs after successful completion of the two-step command sequences.

3.5 28F010 Power Dissipation

When designing portable systems, designers must consider battery power consumption not only during device operation, but also for data retention during system idle time. Flash nonvolatility increases the usable battery life of your system because the 28F010 does not consume any power to retain code or data when the system is off. Table 4 illustrates the power dissipated when updating the 28F010.

Table 4. 28F010 Typical Update Power Dissipation(4)

Operation	Notes	Power Dissipation (Watt-Seconds)
Array Program/Program Verify	1	0.171
Array Erase/Erase Verify	2	0.136
One Complete Cycle	3	0.478

NOTES:

1. Formula to calculate typical Program/Program Verify Power = [V_{PP} × # Bytes × typical # Prog Pulses (t_{WHWH1} × I_{PP2} typical + t_{WHGL} × I_{PP4} typical)] + [V_{CC} × # Bytes × typical # Prog Pulses (t_{WHWH1} × I_{CC2} typical + t_{WHGL} × I_{CC4} typical].
2. Formula to calculate typical Erase/Erase Verify Power = [V_{PP} (V_{PP3} typical × t_{ERASE} typical + I_{PP5} typical × t_{WHGL} × # Bytes)] + [V_{CC} (I_{CC3} typical × t_{ERASE} typical + I_{CC5} typical × t_{WHGL} × # Bytes)].
3. One Complete Cycle = Array Preprogram + Array Erase + Program.
4. “Typicals” are not guaranteed, but based on a limited number of samples from production lots.

4.0 ELECTRICAL SPECIFICATIONS

NOTICE: This is a production datasheet. The specifications are subject to change without notice.

4.1 Absolute Maximum Ratings*

Operating Temperature
During Read ..... 0 °C to +70 °C(1)
During Erase/Program ..... 0 °C to +70 °C(1)
Operating Temperature
During Read ..... –40 °C to +85 °C(2)
During Erase/Program ..... –40 °C to +85 °C(2)
Temperature Under Bias ..... –10 °C to +80 °C(1)
Temperature Under Bias ..... –50 °C to +95 °C(2)
Storage Temperature ..... –65 °C to +125 °C
Voltage on Any Pin with
Respect to Ground ..... –2.0 V to +7.0 V(3)
Voltage on Pin A_9 with
Respect to Ground ..... –2.0 V to +13.5 V(3, 4)
V_{PP} Supply Voltage with
Respect to Ground
During Erase/Program ..... –2.0 V to +14.0 V(3, 4)
V_{CC} Supply Voltage with
Respect to Ground ..... –2.0 V to +7.0 V(3)
Output Short Circuit Current ..... 100 mA(5)

**WARNING: Stressing the device beyond the* Absolute Maximum Ratings *may cause permanent damage. These are stress ratings only. Operation beyond the* Operating Conditions *is not recommended and extended exposure beyond the* Operating Conditions *may affect device reliability.*

NOTES:

1. Operating Temperature is for commercial product as defined by this specification.
2. Operating Temperature is for extended temperature products as defined by this specification.
3. Minimum DC input voltage is –0.5 V. During transitions, inputs may undershoot to –2.0 V for periods less than 20 ns. Maximum DC voltage on output pins is V_{CC} + 0.5 V, which may overshoot to V_{CC} + 2.0 V for periods less than 20 ns.
4. Maximum DC voltage on A_9 or V_{PP} may overshoot to +14.0 V for periods less than 20 ns.
5. Output shorted for no more than one second. No more than one output shorted at a time.
6. See *AC Testing Input/Output Waveform* (Figure 6) and *AC Testing Load Circuit* (Figure 7) for testing characteristics.

4.2 Operating Conditions

Symbol	Parameter	Limits		Unit
		Min	Max	
T_A	Operating Temperature(1)	0	70	°C
T_A	Operating Temperature(2)	–40	+85	°C
V_{CC}	V_{CC} Supply Voltage (10%)(6)	4.50	5.50	V
V_{CC}	V_{CC} Supply Voltage (5%)(7)	4.75	5.25	V

4.3 Capacitance

T_A = 25 °C, f = 1.0 MHz

Symbol	Parameter	Notes	Limits		Unit	Conditions
			Min	Max		
C_{IN}	Address/Control Capacitance	1		8	pF	V_{IN} = 0 V
C_{OUT}	Output Capacitance	1		12	pF	V_{OUT} = 0 V

NOTE:

1. Sampled, not 100% tested.

4.4 DC Characteristics—TTL/NMOS Compatible—Commercial Products

Symbol	Parameter	Notes	Limits Min	Limits Typ(3)	Limits Max	Unit	Test Conditions
I_{LI}	Input Leakage Current	1			±1.0	µA	$V_{CC} = V_{CC}$ Max $V_{IN} = V_{CC}$ or V_{SS}
I_{LO}	Output Leakage Current	1			±10	µA	$V_{CC} = V_{CC}$ Max $V_{OUT} = V_{CC}$ or V_{SS}
I_{CCS}	V_{CC} Standby Current	1		0.3	1.0	mA	$V_{CC} = V_{CC}$ Max CE# = V_{IH}
I_{CC1}	V_{CC} Active Read Current	1		10	30	mA	$V_{CC} = V_{CC}$ Max, CE# = V_{IL} f = 6 MHz, I_{OUT} = 0 mA
I_{CC2}	V_{CC} Programming Current	1, 2		1.0	10	mA	Programming in Progress
I_{CC3}	V_{CC} Erase Current	1, 2		5.0	15	mA	Erasure in Progress
I_{CC4}	V_{CC} Program Verify Current	1, 2		5.0	15	mA	$V_{PP} = V_{PPH}$ Program Verify in Progress
I_{CC5}	V_{CC} Erase Verify Current	1, 2		5.0	15	mA	$V_{PP} = V_{PPH}$ Erase Verify in Progress
I_{PPS}	V_{PP} Leakage Current	1			±10	µA	$V_{PP} \le V_{CC}$
I_{PP1}	V_{PP} Read Current or Standby Current	1		90	200	µA	$V_{PP} > V_{CC}$
					±10.0		$V_{PP} \le V_{CC}$
I_{PP2}	V_{PP} Programming Current	1, 2		8.0	30	mA	$V_{PP} = V_{PPH}$ Programming in Progress
I_{PP3}	V_{PP} Erase Current	1, 2		6.0	30	mA	$V_{PP} = V_{PPH}$ Erasure in Progress
I_{PP4}	V_{PP} Program Verify Current	1, 2		2.0	5.0	mA	$V_{PP} = V_{PPH}$ Program Verify in Progress
I_{PP5}	V_{PP} Erase Verify Current	1, 2		2.0	5.0	mA	$V_{PP} = V_{PPH}$ Erase Verify in Progress
V_{IL}	Input Low Voltage		–0.5		0.8	V	
V_{IH}	Input High Voltage		2.0		V_{CC} + 0.5	V	
V_{OL}	Output Low Voltage				0.45	V	$V_{CC} = V_{CC}$ Min I_{OL} = 5.8 mA
V_{OH1}	Output High Voltage		2.4			V	$V_{CC} = V_{CC}$ Min I_{OH} = –2.5 mA
V_{ID}	A_9 Intelligent Identifier Voltage		11.50		13.00	V	

4.4 DC Characteristics—TTL/NMOS Compatible—Commercial Products (Continued)

Symbol	Parameter	Notes	Limits Min	Limits Typ(3)	Limits Max	Unit	Test Conditions
I_{ID}	A_9 Intelligent Identifier Current	1, 2		90	200	µA	$A_9 = V_{ID}$
V_{PPL}	V_{PP} during Read-Only Operations		0.00		6.5	V	**NOTE:** Erase/Program are Inhibited when $V_{PP} = V_{PPL}$
V_{PPH}	V_{PP} during Read/Write Operations		11.40		12.60	V	
V_{LKO}	V_{CC} Erase/Write Lock Voltage		2.5			V	

NOTES:

Sampled, not 100% tested.

1. All currents are in RMS unless otherwise noted. Typical values at V_{CC} = 5.0 V, V_{PP} = 12.0 V, T = 25 °C. These currents are valid for all product versions (packages and speeds).
2. Not 100% tested: characterization data available.
3. “Typicals” are not guaranteed, but based on a limited number of samples from production lots.

4.5 DC Characteristics—CMOS Compatible—Commercial Products

Symbol	Parameter	Notes	Limits Min	Limits Typ(3)	Limits Max	Unit	Test Conditions
I_{LI}	Input Leakage Current	1			±1.0	µA	$V_{CC} = V_{CC}$ Max $V_{IN} = V_{CC}$ or V_{SS}
I_{LO}	Output Leakage Current	1			±10	µA	$V_{CC} = V_{CC}$ Max $V_{OUT} = V_{CC}$ or V_{SS}
I_{CCS}	V_{CC} Standby Current	1		50	100	µA	$V_{CC} = V_{CC}$ Max CE# = V_{CC} ±0.2 V
I_{CC1}	V_{CC} Active Read Current	1		10	30	mA	$V_{CC} = V_{CC}$ Max, CE# = V_{IL} f = 6 MHz, I_{OUT} = 0 mA
I_{CC2}	V_{CC} Programming Current	1, 2		1.0	10	mA	Programming in Progress
I_{CC3}	V_{CC} Erase Current	1, 2		5.0	15	mA	Erasure in Progress
I_{CC4}	V_{CC} Program Verify Current	1, 2		5.0	15	mA	$V_{PP} = V_{PPH}$ Program Verify in Progress
I_{CC5}	V_{CC} Erase Verify Current	1, 2		5.0	15	mA	$V_{PP} = V_{PPH}$ Erase Verify in Progress
I_{PPS}	V_{PP} Leakage Current	1			±10	µA	$V_{PP} \leq V_{CC}$

4.5 DC Characteristics—CMOS Compatible—Commercial Products (Continued)

Symbol	Parameter	Notes	Limits				Test Conditions
			Min	Typ(3)	Max	Unit	
I_{PP1}	V_{PP} Read Current, ID Current or Standby Current	1		90	200	µA	$V_{PP} > V_{CC}$
					±10		$V_{PP} \leq V_{CC}$
I_{PP2}	V_{PP} Programming Current	1, 2		8.0	30	mA	$V_{PP} > = V_{PPH}$ Programming in Progress
I_{PP3}	V_{PP} Erase Current	1, 2		6.0	30	mA	$V_{PP} = V_{PPH}$ Erasure in Progress
I_{PP4}	V_{PP} Program Verify Current	1, 2		2.0	5.0	mA	$V_{PP} = V_{PPH}$ Program Verify in Progress
I_{PP5}	V_{PP} Erase Verify Current	1, 2		2.0	5.0	mA	$V_{PP} = V_{PPH}$ Erase Verify in Progress
V_{IL}	Input Low Voltage		–0.5		0.8	V	
V_{IH}	Input High Voltage		0.7 V_{CC}		V_{CC} + 0.5	V	
V_{OL}	Output Low Voltage				0.45	V	$V_{CC} = V_{CC}$ Min I_{OL} = 5.8 mA
V_{OH1}	Output High Voltage		0.85 V_{CC}			V	$V_{CC} = V_{CC}$ Min I_{OH} = –2.5 mA
V_{OH2}			V_{CC} – 0.4				$V_{CC} = V_{CC}$ Min I_{OH} = –100 µA
V_{ID}	A_9 Intelligent Identifier Voltage		11.50		13.00	V	
I_{ID}	A_9 Intelligent Identifier Current	1, 2		90	200	µA	$A_9 = V_{ID}$
V_{PPL}	V_{PP} during Read-Only Operations		0.00		6.5	V	**NOTE:** Erase/Programs are Inhibited when $V_{PP} = V_{PPL}$
V_{PPH}	V_{PP} during Read/Write Operations		11.40		12.60	V	
V_{LKO}	V_{CC} Erase/Write Lock Voltage		2.5			V	

NOTES:
Refer to Section 4.4.

4.6 DC Characteristics—TTL/NMOS Compatible—Extended Temperature Products

Symbol	Parameter	Notes	Limits			Unit	Test Conditions
			Min	Typ(3)	Max		
I_{LI}	Input Leakage Current	1			±1.0	µA	$V_{CC} = V_{CC}$ Max $V_{IN} = V_{CC}$ or V_{SS}
I_{LO}	Output Leakage Current	1			±10	µA	$V_{CC} = V_{CC}$ Max $V_{OUT} = V_{CC}$ or V_{SS}
I_{CCS}	V_{CC} Standby Current	1		0.3	1.0	mA	$V_{CC} = V_{CC}$ Max CE# = V_{IH}
I_{CC1}	V_{CC} Active Read Current	1		10	30	mA	$V_{CC} = V_{CC}$ Max, CE# = V_{IL} f = 6 MHz, I_{OUT} = 0 mA
I_{CC2}	V_{CC} Programming Current	1, 2		1.0	30	mA	Programming in Progress
I_{CC3}	V_{CC} Erase Current	1, 2		5.0	30	mA	Erasure in Progress
I_{CC4}	V_{CC} Program Verify Current	1, 2		5.0	30	mA	$V_{PP} = V_{PPH}$ Program Verify in Progress
I_{CC5}	V_{CC} Erase Verify Current	1, 2		5.0	30	mA	$V_{PP} = V_{PPH}$ Erase Verify in Progress
I_{PPS}	V_{PP} Leakage Current	1			±10	µA	$V_{PP} \leq V_{CC}$
I_{PP1}	V_{PP} Read Current or Standby Current	1		90	200	µA	$V_{PP} > V_{CC}$
					±10.0		$V_{PP} \leq V_{CC}$
I_{PP2}	V_{PP} Programming Current	1, 2		8.0	30	mA	$V_{PP} = V_{PPH}$ Programming in Progress
I_{PP3}	V_{PP} Erase Current	1, 2		6.0	30	mA	$V_{PP} = V_{PPH}$ Erasure in Progress
I_{PP4}	V_{PP} Program Verify Current	1, 2		2.0	5.0	mA	$V_{PP} = V_{PPH}$ Program Verify in Progress
I_{PP5}	V_{PP} Erase Verify Current	1, 2		2.0	5.0	mA	$V_{PP} = V_{PPH}$ Erase Verify in Progress
V_{IL}	Input Low Voltage		–0.5		0.8	V	
V_{IH}	Input High Voltage		2.0		V_{CC} + 0.5	V	
V_{OL}	Output Low Voltage				0.45	V	$V_{CC} = V_{CC}$ Min I_{OL} = 5.8 mA
V_{OH1}	Output High Voltage		2.4			V	$V_{CC} = V_{CC}$ Min I_{OH} = –2.5 mA
V_{ID}	A_9 Intelligent Identifier Voltage		11.50		13.00	V	

4.6 DC Characteristics—TTL/NMOS Compatible—Extended Temperature Products (Continued)

Symbol	Parameter	Notes	Limits Min	Limits Typ(3)	Limits Max	Unit	Test Conditions
I_{ID}	A_9 Intelligent Identifier Current	1, 2		90	500	µA	$A_9 = V_{ID}$
V_{PPL}	V_{PP} during Read-Only Operations		0.00		6.5	V	**NOTE:** Erase/Program are Inhibited when $V_{PP} = V_{PPL}$
V_{PPH}	V_{PP} during Read/Write Operations		11.40		12.60	V	
V_{LKO}	V_{CC} Erase/Write Lock Voltage		2.5			V	

NOTES:
Refer to Section 4.4.

4.7 DC Characteristics—CMOS Compatible—Extended Temperature Products

Symbol	Parameter	Notes	Limits Min	Limits Typ(3)	Limits Max	Unit	Test Conditions
I_{LI}	Input Leakage Current	1			±1.0	µA	$V_{CC} = V_{CC}$ Max $V_{IN} = V_{CC}$ or V_{SS}
I_{LO}	Output Leakage Current	1			±10	µA	$V_{CC} = V_{CC}$ Max $V_{OUT} = V_{CC}$ or V_{SS}
I_{CCS}	V_{CC} Standby Current	1		50	100	µA	$V_{CC} = V_{CC}$ Max CE# = V_{CC} ±0.2 V
I_{CC1}	V_{CC} Active Read Current	1		10	30	mA	$V_{CC} = V_{CC}$ Max, CE# = V_{IL} f = 10 MHz, I_{OUT} = 0 mA
I_{CC2}	V_{CC} Programming Current	1, 2		1.0	10	mA	Programming in Progress
I_{CC3}	V_{CC} Erase Current	1, 2		5.0	30	mA	Erasure in Progress
I_{CC4}	V_{CC} Program Verify Current	1, 2		5.0	30	mA	$V_{PP} = V_{PPH}$ Program Verify in Progress
I_{CC5}	V_{CC} Erase Verify Current	1, 2		5.0	30	mA	$V_{PP} = V_{PPH}$ Erase Verify in Progress
I_{PPS}	V_{PP} Leakage Current	1			±10	µA	$V_{PP} \le V_{CC}$
I_{PP1}	V_{PP} Read Current, ID Current or Standby Current	1		90	200	µA	$V_{PP} > V_{CC}$
					±10		$V_{PP} \le V_{CC}$

4.7 DC Characteristics—CMOS Compatible—Extended Temperature Products (Continued)

Symbol	Parameter	Notes	Limits Min	Limits Typ(3)	Limits Max	Unit	Test Conditions
I_{PP2}	V_{PP} Programming Current	1, 2		8.0	30	mA	$V_{PP} = V_{PPH}$ Programming in Progress
I_{PP3}	V_{PP} Erase Current	1, 2		6.0	30	mA	$V_{PP} = V_{PPH}$ Erasure in Progress
I_{PP4}	V_{PP} Program Verify Current	1, 2		2.0	5.0	mA	$V_{PP} = V_{PPH}$ Program Verify in Progress
I_{PP5}	V_{PP} Erase Verify Current	1, 2		2.0	5.0	mA	$V_{PP} = V_{PPH}$ Erase Verify in Progress
V_{IL}	Input Low Voltage		–0.5		0.8	V	
V_{IH}	Input High Voltage		0.7 V_{CC}		V_{CC} + 0.5	V	
V_{OL}	Output Low Voltage				0.45	V	$V_{CC} = V_{CC}$ Min I_{OL} = 5.8 mA
V_{OH1}	Output High Voltage		0.85 V_{CC}			V	$V_{CC} = V_{CC}$ Min I_{OH} = –2.5 mA
V_{OH2}			V_{CC} – 0.4				$V_{CC} = V_{CC}$ Min I_{OH} = –100 µA
V_{ID}	A_9 Intelligent Identifier Voltage		11.50		13.00	V	
I_{ID}	A_9 Intelligent Identifier Current	1, 2		90	500	µA	$A_9 = V_{ID}$
V_{PPL}	V_{PP} during Read-Only Operations		0.00		6.5	V	**NOTE:** Erase/Programs are Inhibited when $V_{PP} = V_{PPL}$
V_{PPH}	V_{PP} during Read/Write Operations		11.40		12.60	V	
V_{LKO}	V_{CC} Erase/Write Lock Voltage		2.5			V	

NOTE:
Refer to Section 4.4.

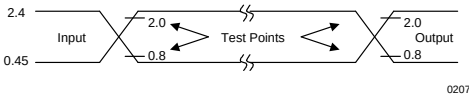

AC test inputs are driven at V_{OH} (2.4 V_{TTL}) for a Logic "1" and V_{OL} (0.45 V_{TTL}) for a Logic "0". Input timing begins at V_{IH} (2.0 V_{TTL}) and V_{IL} (0.8 V_{TTL}). Output timing ends at V_{IH} and V_{IL}. Input rise and fall times (10% to 90%) <10 ns.

Figure 6. Testing Input/Output Waveform(1)

NOTE:

1. Testing characteristics for 28F010-90, 28F010-120, and 28F010-150.

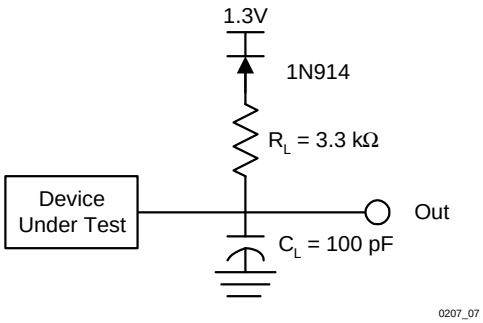

C_L Includes Jig Capacitance

Figure 7. AC Testing Load Circuit

4.8 AC Characteristics—Read-Only Operations—Commercial and Extended Temperature Products

Versions			28F010-90(1)		28F010-120(1)		28F010-150(1)		
Symbol	**Characteristic**	**Notes**	**Min**	**Max**	**Min**	**Max**	**Min**	**Max**	**Unit**
t_{AVAV}/t_{RC}	Read Cycle Time		90		120		150		ns
t_{ELQV}/t_{CE}	CE# Access Time			90		120		150	ns
t_{AVQV}/t_{ACC}	Address Access Time			90		120		150	ns
t_{GLQV}/t_{OE}	OE# Access Time			35		50		55	ns
t_{ELQX}/t_{LZ}	CE# to Low Z	2, 3	0		0		0		ns
t_{EHQZ}	Chip Disable to Output in High Z	2		45		55		55	ns
t_{GLQX}/t_{OLZ}	OE# to Output in Low Z	2, 3	0		0		0		ns
t_{GHQZ}/t_{DF}	Output Disable to Output in High Z	2		30		30		35	ns
t_{OH}	Output Hold from Address, CE#, or OE# Change	2, 4	0		0		0		ns
t_{WHGL}	Write Recovery Time before Read		6		6		6		µs

NOTES:

1. See AC *Input/Output Waveform* and AC *Testing Load Circuit* for testing characteristics.
2. Sampled, not 100% tested.
3. Guaranteed by design.
4. Whichever occurs first.

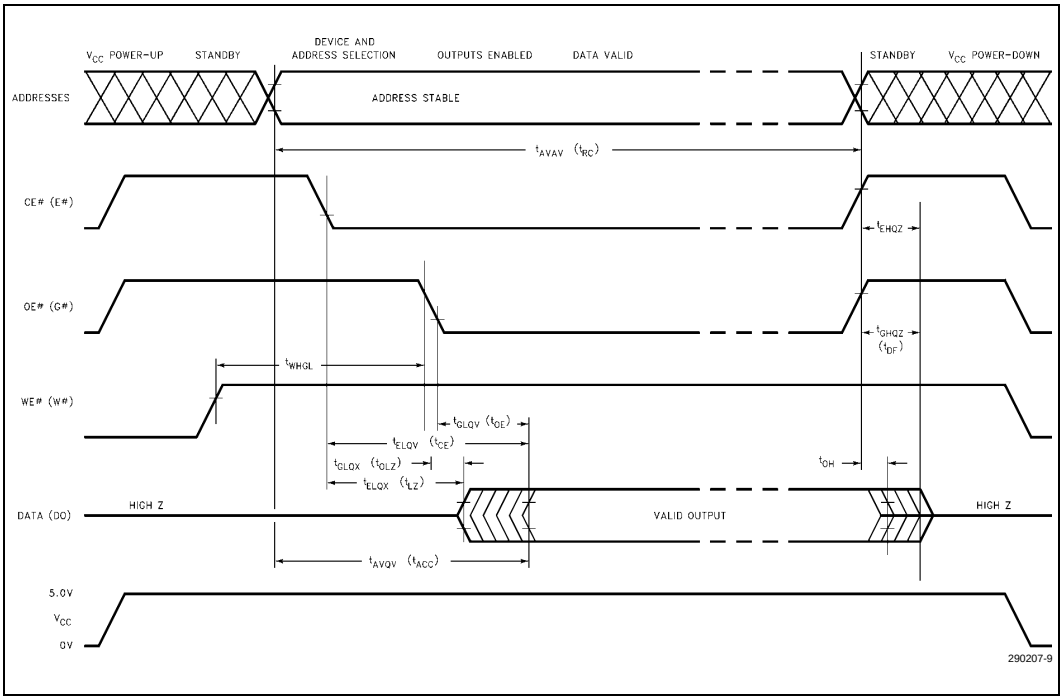

Figure 8. AC Waveforms for Read Operations

4.9 AC Characteristics—Write/Erase/Program Only Operations[1] — Commercial and Extended Temperature Products

Versions			28F010-90[2]		28F010-120[2]		28F010-150[2]		
Symbol	**Characteristic**	**Notes**	**Min**	**Max**	**Min**	**Max**	**Min**	**Max**	**Unit**
t_{AVAV}/t_{WC}	Write Cycle Time		90		120		150		ns
t_{AVWL}/t_{AS}	Address Set-Up Time		0		0		0		ns
t_{WLAX}/t_{AH}	Address Hold Time		40		40		40		ns
		3	55						
t_{DVWH}/t_{DS}	Data Set-Up Time		40		40		40		ns
			55						
t_{WHDX}/t_{DH}	Data Hold Time		10		10		10		ns
t_{WHGL}	Write Recovery Time before Read		6		6		6		µs
t_{GHWL}	Read Recovery Time before Write	4	0		0		0		ns
t_{ELWL}/t_{CS}	Chip Enable Set-Up Time before Write		15		15		15		ns
t_{WHEH}/t_{CH}	Chip Enable Hold Time		0		0		0		ns
t_{WLWH}/t_{WP}	Write Pulse Width		40		60		60		ns
		3	55						
t_{WHWL}/t_{WPH}	Write Pulse Width High		20		20		20		ns
t_{WHWH1}	Duration of Programming Operation	5	10		10		10		µs
t_{WHWH2}	Duration of Erase Operation	5	9.5		9.5		9.5		ms
t_{VPEL}	V_{PP} Set-Up Time to Chip Enable Low	4	1		1		1		µs

NOTES:

1. Read timing characteristics during read/write operations are the same as during read-only operations. Refer to *AC Characteristics for Read-Only Operations*.
2. See AC *Input/Output Waveform* and AC *Testing Load Circuit* for testing characteristics.
3. Minimum specification for extended temperature product.
4. Guaranteed by design.
5. The integrated stop timer terminates the programming/erase operations, thus eliminating the need for a maximum specification.

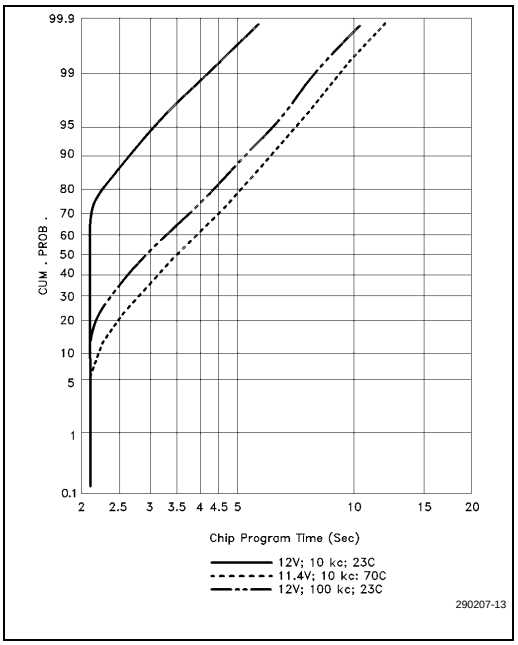

Figure 9. Typical Programming Capability

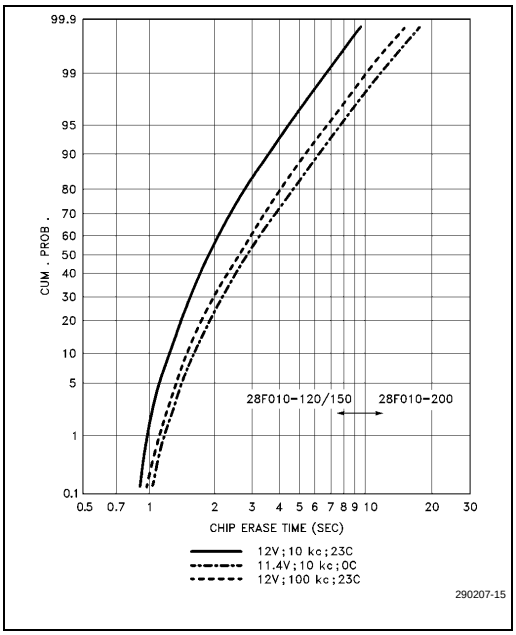

Figure 11. Typical Erase Capability

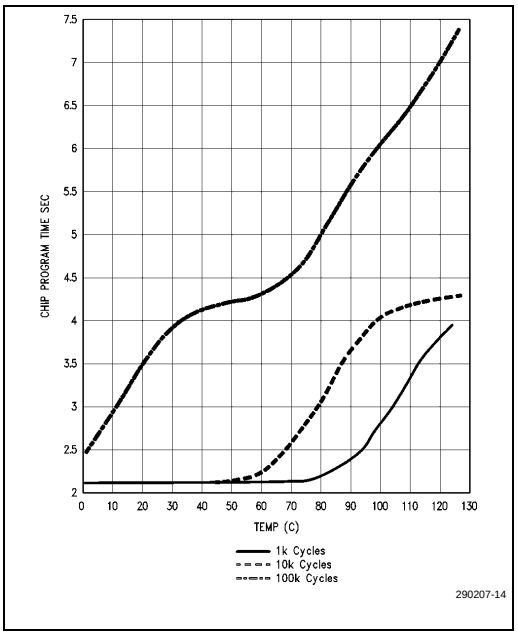

Figure 10. Typical Program Time at 12 V

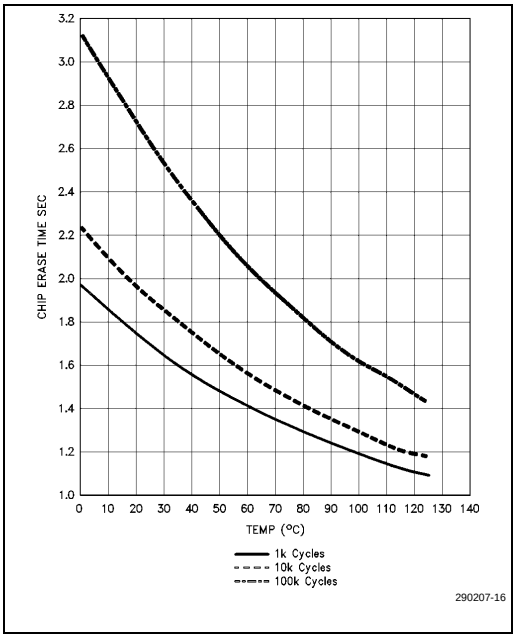

Figure 12. Typical Erase Time at 12 V

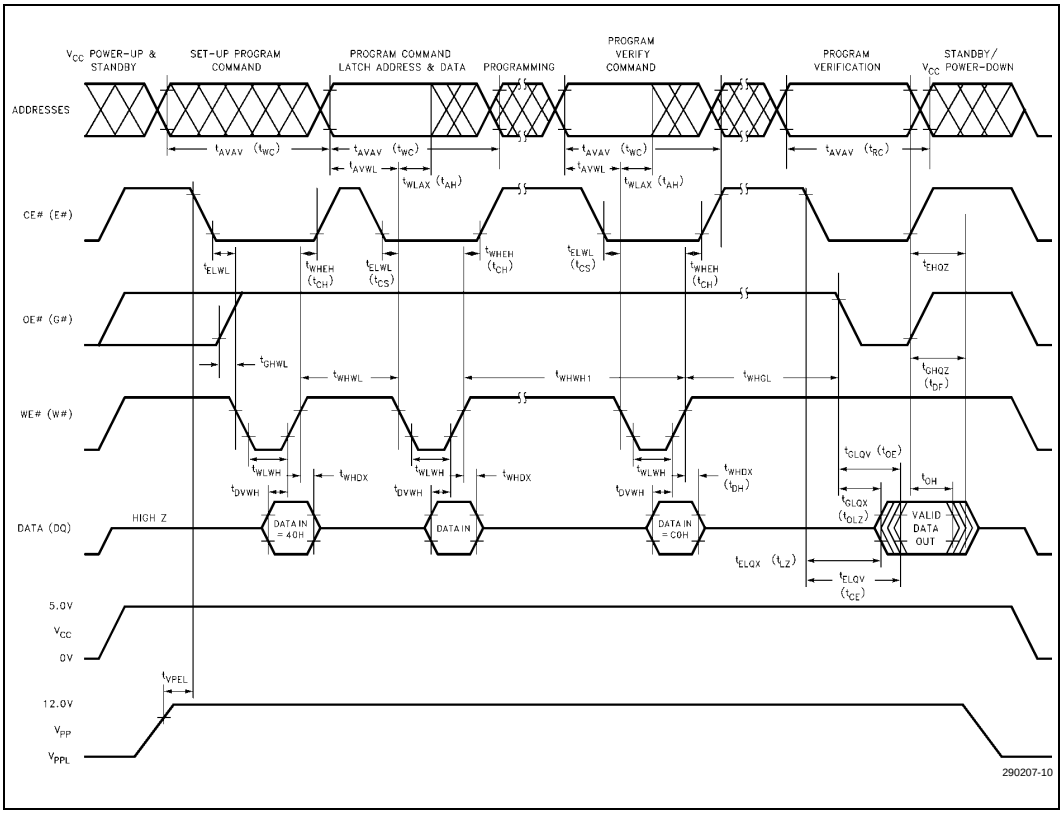

Figure 13. AC Waveforms for Programming Operations

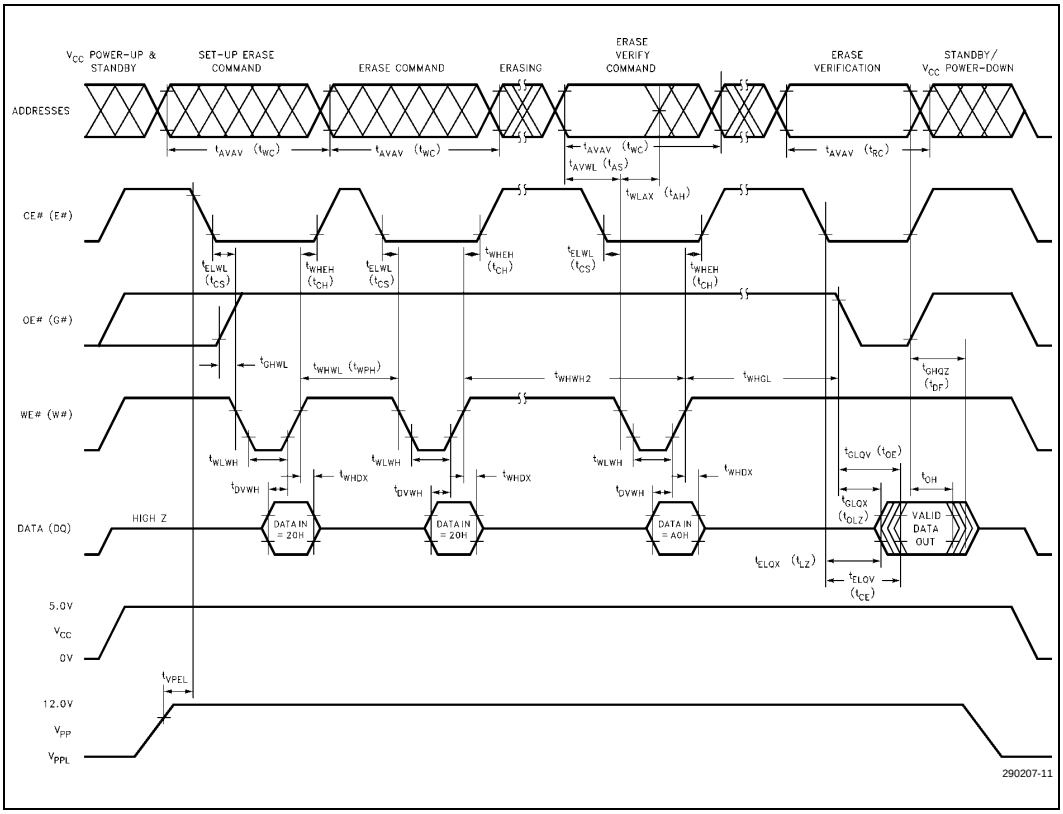

Figure 14. AC Waveforms for Erase Operations

4.10 AC Characteristics—Alternative CE#-Controlled Writes[1]—Commercial and Extended Temperature

Versions			28F010-90[2]		28F010-120[2]		28F010-150[2]		
Symbol	**Characteristic**	**Notes**	**Min**	**Max**	**Min**	**Max**	**Min**	**Max**	**Unit**
t_{AVAV}	Write Cycle Time		90		120		150		ns
t_{AVEL}	Address Set-Up Time		0		0		0		ns
t_{ELAX}	Address Hold Time		45		55		55		ns
		3	60						
t_{DVEH}	Data Set-Up Time		35		45		45		ns
		3	50						
t_{EHDX}	Data Hold Time		10		10		10		ns
t_{EHGL}	Write Recovery Time before Read		6		6		6		µs
t_{GHWL}	Read Recovery Time before Write	4	0		0		0		ns
t_{WLEL}	Write Enable Set-Up Time before Chip Enable		0		0		0		ns
t_{EHWH}	Write Enable Hold Time		0		0		0		ns
t_{ELEH}	Write Pulse Width		45		70		70		ns
		3	60						
t_{EHEL}	Write Pulse Width High		20		20		20		ns
t_{EHEH1}	Duration of Programming Operation	5	10		10		10		µs
t_{EHEH2}	Duration of Erase Operation	5	9.5		9.5		9.5		ms
t_{VPEL}	V_{PP} Set-Up Time to Chip Enable Low	4	1		1		1		µs

NOTES:

1. Read timing characteristics during read/write operations are the same as during read-only operations. Refer to *AC Characteristics for Read-Only Operations*.
2. See AC *Input/Output Waveform* and AC *Testing Load Circuit* for testing characteristics.
3. Minimum specification for extended temperature product.
4. Guaranteed by design.
5. The integrated stop timer terminates the programming/erase operations, thus eliminating the need for a maximum specification.

4.11 Erase and Programming Performance

Parameter	Notes	Min	Typical	Max	Unit
Chip Erase Time	1, 3, 4		1	10	Sec
Chip Program Time	1, 2, 4		2	12.5	Sec

NOTES:

1. "Typicals" are not guaranteed, but based on samples from production lots. Data taken at 25 °C, 12.0 V V_{PP}.
2. Minimum byte programming time excluding system overhead is 16 µsec (10 µsec program + 6 µsec write recovery), while maximum is 400 µsec/byte (16 µsec x 25 loops allowed by algorithm). Max chip programming time is specified lower than the worst case allowed by the programming algorithm since most bytes program significantly faster than the worst case byte.
3. Excludes 00H programming prior to erasure.
4. Excludes system level overhead.

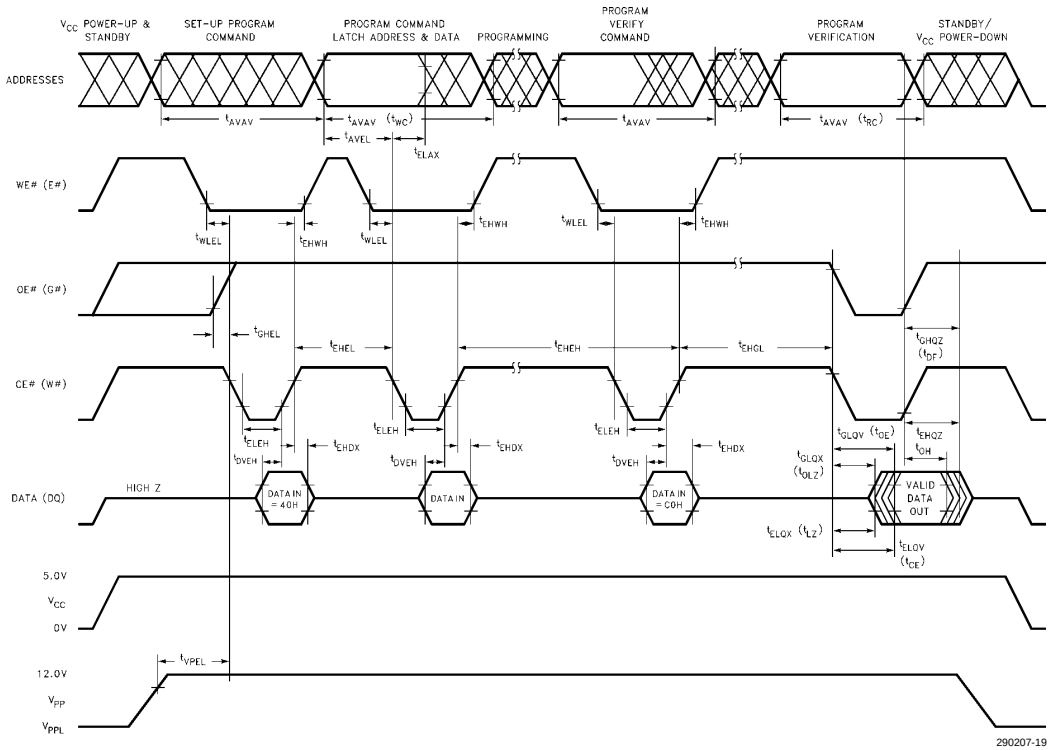

NOTE:
Alternative CE#-Controlled Write Timings also apply to erase operations.

Figure 15. Alternate AC Waveforms for Programming Operations

5.0 ORDERING INFORMATION

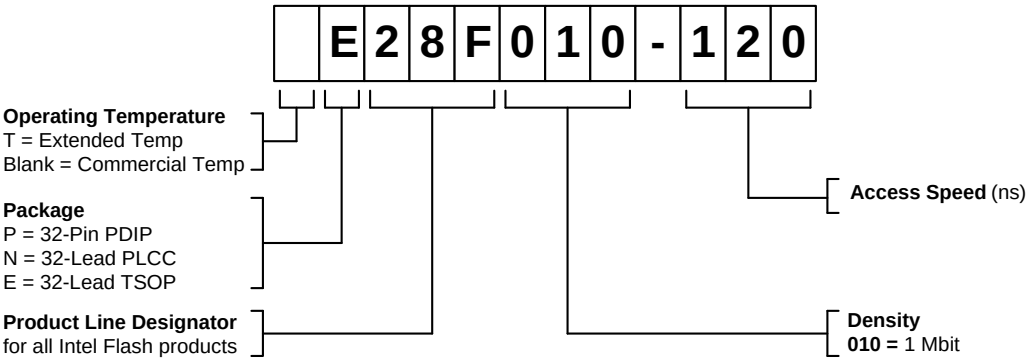

VALID COMBINATIONS:

E28F010-90	N28F010-90	P28F010-90
E28F010-120	N28F010-120	P28F010-120
E28F010-150	N28F010-150	P28F010-150
TE28F010-90	TN28F010-90	TP28F010-90
TE28F010-120	TN28F010-120	TP28F010-120
TE28F010-150	TN28F010-150	TP28F010-150

290207-20

6.0 ADDITIONAL INFORMATION

Visit Intel's World Wide Web home page at http://www.Intel.com for technical documentation and tools.

Мы молодая и активно развивающаяся компания в области поставок электронных компонентов. Мы поставляем электронные компоненты отечественного и импортного производства напрямую от производителей и с крупнейших складов мира.

Благодаря сотрудничеству с мировыми поставщиками мы осуществляем комплексные и плановые поставки широчайшего спектра электронных компонентов.

Собственная эффективная логистика и склад в обеспечивает надежную поставку продукции в точно указанные сроки по всей России.

Мы осуществляем техническую поддержку нашим клиентам и предпродажную проверку качества продукции. На все поставляемые продукты мы предоставляем гарантию .

Осуществляем поставки продукции под контролем ВП МО РФ на предприятия военно-промышленного комплекса России , а также работаем в рамках 275 ФЗ с открытием отдельных счетов в уполномоченном банке. Система менеджмента качества компании соответствует требованиям ГОСТ ISO 9001.

Минимальные сроки поставки, гибкие цены, неограниченный ассортимент и индивидуальный подход к клиентам являются основой для выстраивания долгосрочного и эффективного сотрудничества с предприятиями радиоэлектронной промышленности, предприятиями ВПК и научно-исследовательскими институтами России.

С нами вы становитесь еще успешнее!

Наши контакты:

Телефон: +7 812 627 14 35

Электронная почта: sales@st-electron.ru

Адрес: 198099, Санкт-Петербург, Промышленная ул, дом № 19, литера Н, помещение 100-Н Офис 331