Features

- Radial Leaded Devices
- Cured, flame retardant epoxy polymer insulating material meets UL 94V-0 requirements
- Agency recognition:
- RoHS compliant*

The MF-RX Series is currently available, although not recommended for new designs. The higher voltage rated MF-RX/72 Series is preferred.

BOURNS®

MF-RX Series - PTC Resettable Fuses

Electrical Characteristics

Model	V max. Volts	I max. Amps	I_{hold}	I_{trip}	Initial Resistance		1 Hour (R_1) Post-Trip Resistance	Max. Time to Trip		Tripped Power Dissipation
			Amperes at 23 °C		Ohms at 23 °C		Ohms at 23 °C	Amperes at 23 °C	Seconds at 23 °C	Watts at 23 °C
			Hold	Trip	Min.	Max.	Max.			Typ.
MF-RX110	60	40	1.10	2.20	0.15	0.25	0.38	5.5	8.2	1.50
MF-RX135	60	40	1.35	2.70	0.12	0.19	0.30	6.75	9.6	1.70
MF-RX160	60	40	1.60	3.20	0.09	0.14	0.22	8.0	11.4	1.90
MF-RX185	60	40	1.85	3.70	0.08	0.12	0.19	9.25	12.6	2.10
MF-RX250	60	40	2.50	5.00	0.05	0.08	0.13	12.5	15.6	2.50
MF-RX300	60	40	3.00	6.00	0.04	0.06	0.10	15.0	19.8	2.80
MF-RX375	60	40	3.75	7.50	0.03	0.05	0.08	18.75	24.0	3.20

Environmental Characteristics

Operating/Storage Temperature..... -40 °C to +85 °C
Maximum Device Surface Temperature
in Tripped State..... 125 °C
Passive Aging..... +85 °C, 1000 hours..... ±5 % typical resistance change
Humidity Aging..... +85 °C, 85 % R.H. 1000 hours..... ±5 % typical resistance change
Thermal Shock..... -40 °C to +85 °C, 10 times..... ±10 % typical resistance change
Solvent Resistance..... MIL-STD-202, Method 215..... No change
Vibration..... MIL-STD-883C, Method 2007.1, Condition A..... No change

Test Procedures And Requirements For Model MF-RX Series

Test	Test Conditions	Accept/Reject Criteria
Visual/Mech.	Verify dimensions and materials	Per MF physical description
Resistance	In still air @ 23 °C	Rmin ≤ R ≤ Rmax
Time to Trip	5 times Ihold, Vmax, 23 °C	T ≤ max. time to trip (seconds)
Hold Current	30 min. at Ihold	No trip
Trip Cycle Life	Vmax, Imax, 100 cycles	No arcing or burning
Trip Endurance	Vmax, 48 hours	No arcing or burning

UL File Number..... E 174545S
CSA File Number..... CA 110338
TÜV File Number..... R2057213

Thermal Derating Chart - I_{hold} / I_{trip} (Amps)

Model	Ambient Operating Temperature								
	-40 °C	-20 °C	0 °C	23 °C	40 °C	50 °C	60 °C	70 °C	85 °C
MF-RX110	1.71 / 3.42	1.50 / 3.00	1.31 / 2.62	1.10 / 2.20	0.89 / 1.78	0.79 / 1.58	0.69 / 1.38	0.59 / 1.18	0.44 / 0.88
MF-RX135	2.09 / 4.18	1.84 / 3.68	1.61 / 3.22	1.35 / 2.70	1.09 / 2.18	0.97 / 1.94	0.85 / 1.70	0.73 / 1.46	0.54 / 1.08
MF-RX160	2.48 / 4.96	2.18 / 4.36	1.90 / 3.80	1.60 / 3.20	1.30 / 2.60	1.15 / 2.30	1.01 / 2.02	0.86 / 1.72	0.64 / 1.28
MF-RX185	2.87 / 5.74	2.52 / 5.04	2.20 / 4.40	1.85 / 3.70	1.50 / 3.00	1.33 / 2.66	1.17 / 2.34	1.00 / 2.00	0.74 / 1.48
MF-RX250	3.88 / 7.76	3.40 / 6.80	2.98 / 5.96	2.50 / 5.00	2.03 / 4.06	1.80 / 3.60	1.58 / 3.16	1.35 / 2.70	1.00 / 2.00
MF-RX300	4.65 / 9.30	4.08 / 8.16	3.57 / 7.14	3.00 / 6.00	2.43 / 4.86	2.16 / 4.32	1.89 / 3.78	1.62 / 3.24	1.20 / 2.40
MF-RX375	5.81 / 11.6	5.10 / 10.2	4.46 / 8.92	3.75 / 7.50	3.04 / 6.08	2.70 / 5.40	2.36 / 4.72	2.03 / 4.06	1.50 / 3.00

*RoHS Directive 2002/95/EC Jan 27, 2003 including Annex.
Specifications are subject to change without notice.
Customers should verify actual device performance in their specific applications.

Additional Features

- Bulk packaging, tape and reel and Ammo-Pak available on most models
- Resettable circuit protection

Applications

Almost anywhere there is a low voltage power supply, up to 60 V and a load to be protected, including:

- Security and fire alarm systems
- Loud speakers
- Power transformers

MF-RX Series - PTC Resettable Fuses

BOURNS®

Product Dimensions

Model	A	B	C		D	E	Physical Characteristics		
	Max.	Max.	Nom.	Tol. ±	Min.	Max.	Style	Lead Dia.	Material
MF-RX110	13.0 (0.512)	18.0 (0.709)	5.1 (0.201)	0.7 (0.028)	7.6 (0.299)	3.1 (0.122)	1	0.81 (0.032)	Sn/Cu
MF-RX135	14.5 (0.571)	19.6 (0.772)	5.1 (0.201)	0.7 (0.028)	7.6 (0.299)	3.1 (0.122)	1	0.81 (0.032)	Sn/Cu
MF-RX160	16.3 (0.642)	21.3 (0.839)	5.1 (0.201)	0.7 (0.028)	7.6 (0.299)	3.1 (0.122)	1	0.81 (0.032)	Sn/Cu
MF-RX185	17.8 (0.701)	22.9 (0.902)	5.1 (0.201)	0.7 (0.028)	7.6 (0.299)	3.1 (0.122)	1	0.81 (0.032)	Sn/Cu
MF-RX250	21.3 (0.839)	26.4 (1.039)	10.2 (0.402)	0.7 (0.028)	7.6 (0.299)	3.1 (0.122)	1	0.81 (0.032)	Sn/Cu
MF-RX300	24.9 (0.980)	30.0 (1.181)	10.2 (0.402)	0.7 (0.028)	7.6 (0.299)	3.1 (0.122)	1	0.81 (0.032)	Sn/Cu
MF-RX375	28.4 (1.118)	33.5 (1.319)	10.2 (0.402)	0.7 (0.028)	7.6 (0.299)	3.1 (0.122)	1	0.81 (0.032)	Sn/Cu

0.81 (20AWG)

Packaging options:
BULK: All models = 500 pcs. per bag.
TAPE & REEL: MF-RX110 – MF-RX160 = 1500 pcs. per reel; MF-RX185 – MF-RX375 = 1000 pcs. per reel
AMMO-PACK: MF-RX110 – MF-RX160 = 1000 pcs. per reel; MF-RX185 – MF-RX375 = 500 pcs. per reel

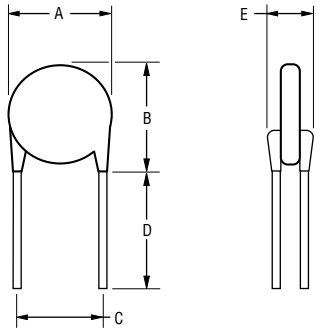

NOTE: Kinked lead option is available for board standoff. Contact factory for details.

Typical Part Marking

Represents total content. Layout may vary.

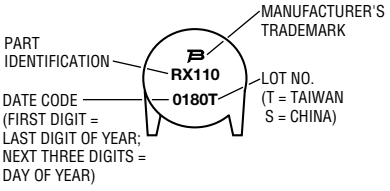

How to Order

MF - RX 110 - 0 - 99

Multifuse® Product Designator

Series
RX = Radial Leaded Component

Hold Current, I_{hold}
110-375 (1.10 Amps - 3.75 Amps)

Packaging Options
- __ = Bulk Packaging without part number suffix option
- 0-99 = Bulk Packaging with part number suffix option
- 2 = Tape and Reel without part number suffix option*
- 2-99 = Tape and Reel with part number suffix option
- AP = Ammo-Pak*
- 0-14 = Kinked leads where straight leads are standard
- 0-17 = Straight leads where kinked leads are standard

Part Number Suffix Option
- 99 = As of date code April 1, 2005 all MF-RX models are RoHS compliant. The suffix "-99" can be used if a new part number is required to reference the RoHS compliance.

Examples:
MF-RX110 ..... Bulk packaging
MF-RX110-0-99 ..... Bulk packaging with part number suffix option
MF-RX110-2 ..... Tape and reel packaging
MF-RX110-2-99 ..... Tape and reel packaging with part number suffix option

*Packaged per EIA486-B

Typical Time to Trip at 23 °C

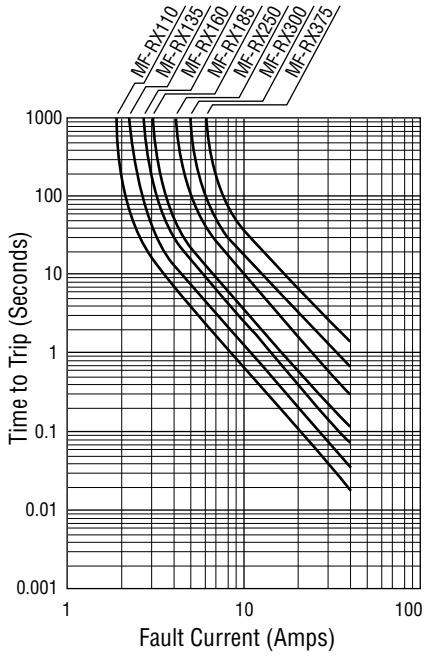

Specifications are subject to change without notice.
Customers should verify actual device performance in their specific applications.

MF-R, MF-R/90, MF-R/600, MF-RX, MF-RX/72 & MF-RX/250 Series
Tape and Reel Specifications

BOURNS®

Devices taped using EIA468–B/IEC286-2 standards. See table below and Figures 1 and 2 for details.

Dimension Description	IEC Mark	EIA Mark	Dimensions	
			Dimensions	Tolerance
Carrier tape width	W	W	18 (.709)	-0.5/+1.0 (-0.02/+.039)
Hold down tape width	W_0	W_4	11 (.433)	min.
Hold down tape			No protrusion	
Top distance between tape edges	W_2	W_6	3 (.118)	max.
Sprocket hole position	W_1	W_5	9 (.354)	-0.5/+0.75 (-0.02/+0.03)
Sprocket hole diameter	D_0	D_0	4 (.157)	±0.2 (±.0078)
Abscissa to plane (straight lead)	H	H	18.5 (.728)	±3.0 (±.118)
Abscissa to plane (kinked lead)	H_0	H_0	16 (.63)	±0.5 (±.02)
Abscissa to top (straight lead)	H_1	H_1	38.0 (1.496)	max.
Abscissa to top (kinked lead)	H_1	H_1	32.2 (1.268)	max.
Overall width w/lead protrusion (straight lead)		C_1	55.0 (2.165)	max.
Overall width w/lead protrusion (kinked lead)		C_1	43.2 (1.7)	max.
Overall width w/o lead protrusion (straight lead)		C_2	54.0 (2.126)	max.
Overall width w/o lead protrusion (kinked lead)		C_2	42.5 (1.673)	max.
Lead protrusion	l_1	L_1	1.0 (.039)	max.
Protrusion of cutout	L	L	11 (.433)	max.
Protrusion beyond hold-down tape	l_2	l_2	Not specified	
Sprocket hole pitch	P_0	P_0	12.7 (0.5)	±0.3 (±.012)
Pitch tolerance			20 consecutive	±1 (±.039)
Device pitch: MF-R005–MF-R160, MF-R/90, MF-RX110/72–MF-RX185/72			12.7 (0.5)	±0.3 (±.012)
Device pitch: MF-R185–MF-R400, MF-RX110–MF-RX375 MF-R/600, MF-RX250/72–MF-RX375/72			25.4 (1.0)	±0.6 (±.024)
Tape thickness	t	t	0.9 (.035)	max.
Tape thickness with splice: MF-R010–MF-R160, MF-RX110/72–MF-RX185/72		t_1	1.5 (.059)	max.
Tape thickness with splice: MF-R250–MF-R1100, MF-RX110–MF-RX375, MF-R/90, MF-RX250/72-MF-RX375/72		t_1	2.3 (.091)	max.
Splice sprocket hole alignment			0	±0.3 (±.012)
Body lateral deviation	Δ_h	Δ_h	0	±1.0 (±.039)
Body tape plane deviation	Δ_p	Δ_p	0	±1.3 (±.051)

MF-R, MF-R/90, MF-R/600, MF-RX, MF-RX/72 & MF-RX/250 Series
Tape and Reel Specifications

BOURNS®

Dimension Description	IEC Mark	EIA Mark	Dimensions			Tolerance
Lead spacing: MF-R, MF-R/90, MF-R/600, MF-RX, MF-RX/72	*F*	*F*	5.08 (0.2)			±0.2 (±0.008)
Lead spacing: MF-RX/250	*F*	*F*	5.08 (0.2)			-0.5/+0.6 (-.020/+.024)
Reel width	*w*	W_2	56.0 (2.205)			max.
Reel diameter	*d*	*a*	370.0 (14.57)			max.
Space between flanges less device	W_1	*h*	4.75 (.187)			±3.25 (±.128)
Arbor hole diameter	*f*	*c*	26.0 (1.024)			±12.0 (±.472)
Core diameter: MF-R, MF-RX, MF-R/90	*h*	*n*	80 (3.15)			max.
Core diameter: MF-RX/250, MF-R/600	*h*	*n*	91 (3.58)			max.
Box: MF-R, MF-RX, MF-R/90			56 (2.2)	372 (14.6)	372 (14.6)	max.
Box: MF-RX/250			67 (2.64)	372 (14.6)	362 (14.25)	max.
Box: MF-R/600			64 (2.52)	372 (14.6)	362 (14.25)	max.
Consecutive missing places: MF-R, MF-RX, MF-R/90			3			max.
Consecutive missing places: MF-RX/250, MF-R/600			none			
Empty places per reel: MF-R, MF-RX, MF-R/90			Not specified			
Empty places per reel: MF-RX/250, MF-R/600			0.1 %			

Taped Component Dimensions - Figure 1

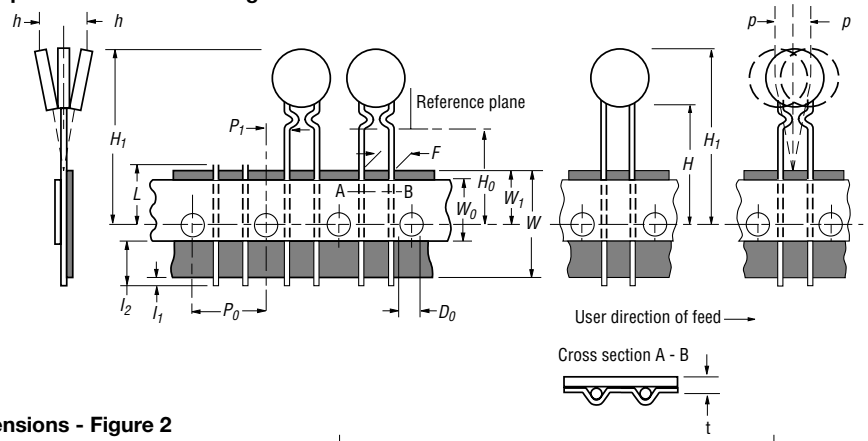

DIMENSIONS: MM (INCHES)

Reel Dimensions - Figure 2

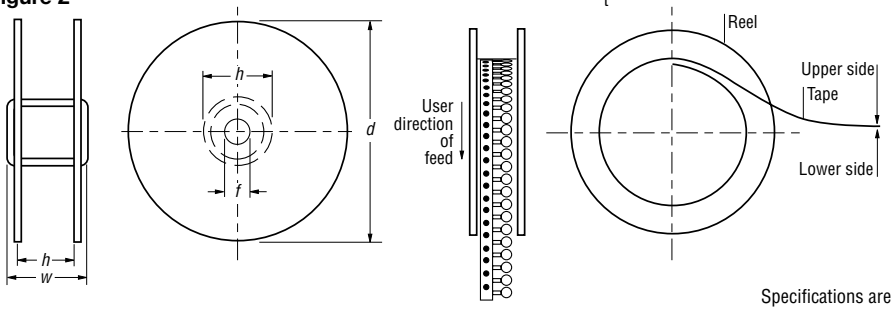

Specifications are subject to change without notice.
Customers should verify actual device performance in their specific applications.

Мы молодая и активно развивающаяся компания в области поставок электронных компонентов. Мы поставляем электронные компоненты отечественного и импортного производства напрямую от производителей и с крупнейших складов мира.

Благодаря сотрудничеству с мировыми поставщиками мы осуществляем комплексные и плановые поставки широчайшего спектра электронных компонентов.

Собственная эффективная логистика и склад в обеспечивает надежную поставку продукции в точно указанные сроки по всей России.

Мы осуществляем техническую поддержку нашим клиентам и предпродажную проверку качества продукции. На все поставляемые продукты мы предоставляем гарантию .

Осуществляем поставки продукции под контролем ВП МО РФ на предприятия военно-промышленного комплекса России , а также работаем в рамках 275 ФЗ с открытием отдельных счетов в уполномоченном банке. Система менеджмента качества компании соответствует требованиям ГОСТ ISO 9001.

Минимальные сроки поставки, гибкие цены, неограниченный ассортимент и индивидуальный подход к клиентам являются основой для выстраивания долгосрочного и эффективного сотрудничества с предприятиями радиоэлектронной промышленности, предприятиями ВПК и научно-исследовательскими институтами России.

С нами вы становитесь еще успешнее!

Наши контакты:

Телефон: +7 812 627 14 35

Электронная почта: sales@st-electron.ru

Адрес: 198099, Санкт-Петербург, Промышленная ул, дом № 19, литера Н, помещение 100-Н Офис 331