80386DX
32-Bit Microprocessor

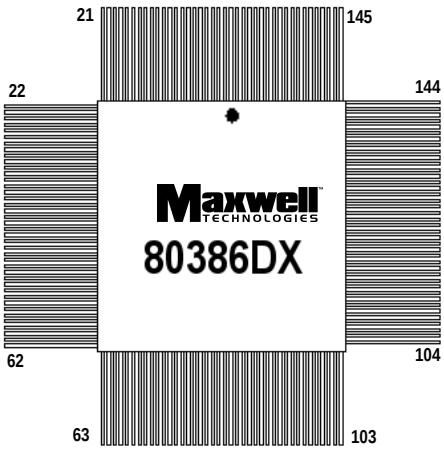

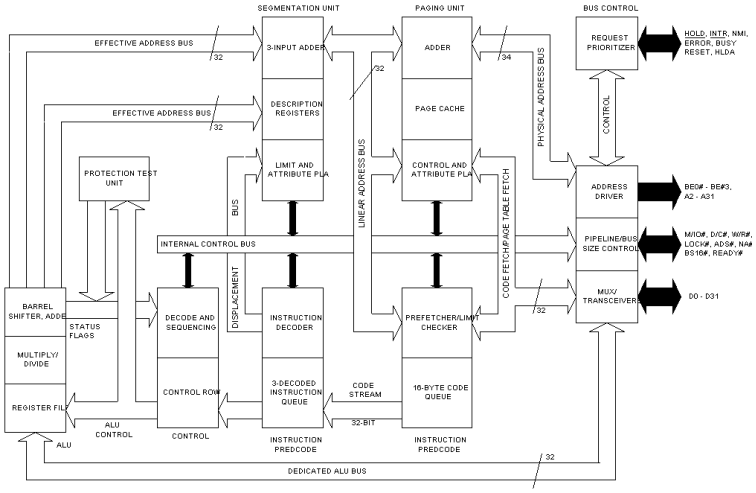

Logic Diagram

FEATURES:

- 32-Bit microprocessor
- RAD-PAK® radiation-hardened against natural space radiation
- Total dose hardness:
  - >100 Krad (Si), dependent upon space mission
- Single event effect:
  - SEL_{TH} = 37-60 MeV/mg/cm^2
  - SEU_{TH} = 3.4 MeV/mg/cm^2
  - SEU Cross section 1E-3 cm^2/bit
- Package:
  - 164 Pin RAD-PAK® quad flat pack
- 8, 16, 32-Bit data types
- 8 general purpose 32-Bit registers
- Hardware debugging support
- Very large address space:
  - 4 gigabyte physical
  - 64 terabyte Virtual
  - 4 gigabyte maximum segment size
- Integrated memory management unit
  - Virtual memory support
  - Four levels of protection
  - Fully compatible with 80C286
- Optimized for system development
  - Pipelined instructions
  - On-chip caches support address translation
  - 32 megabytes/sec bus bandwidth

DESCRIPTION:

Maxwell Technologies' 80386DX high performance 32-bit microprocessor features a geater than 100 krad (Si) total dose tolerance, dependent upon space mission. It is designed for very high performance and multitasking operating systems. The integrated memory management and protection architecture includes address translation registers, multitasking hardware and a protection mechanism to support operating systems. The 80386DX allows simultaneous running of multiple operations. In addition, the 80386DX is capable of execution at sustained rates of between 3 and 4 million instructions per second. It offers new testability and debugging features, including a self-test and direct access to the page translation cache.

Maxwell Technologies' patented RAD-PAK® packaging technology incorporates radiation shielding in the microcircuit package. It eliminates the need for box shielding while providing the required radiation shielding for a lifetime in orbit or space mission. In a GEO orbit, RAD-PAK provides greater than 100 krad (Si) radiation dose tolerance. This product is available with screening up to Class S.

(858) 503-3300 - Fax: (858) 503-3301 - www.maxwell.com

©2001 Maxwell Technologies
All rights reserved.

TABLE 1. 80386DX PIN DESCRIPTION

PIN	SYMBOL	DESCRIPTION
1-7, 9, 10, 12, 13, 16, 17, 20, 21, 24, 146-149, 152-154, 156-159, 161-163	A16-A11, A9, A10, A7, A8, A5, A6, A3, A4, A2, A31-A28, A27-A25, A23-A22, A20-A18	Address Bus
8, 18, 19, 22, 23, 25, 28-30, 33, 36, 38-40, 47, 48, 65, 66, 68, 73, 76, 77, 82, 84, 86, 88, 103, 106, 107, 114, 125, 126, 129, 130,133, 134, 145, 155, 160, 164	NC	Not Connected
11, 15, 27, 32, 35, 43, 51, 53, 55, 57, 61, 70, 92, 95, 100, 111, 118, 122, 138, 142, 151	V_{SS}	Ground
14, 26, 31, 34, 44, 50, 52, 54, 56, 58, 62, 69, 91, 96, 99, 110, 117, 137, 141, 150,	V_{CC}	Power Supply
37	INTR	Interupt Request
41	NMI	Non-Maskable Interupt Request
42	PEREQ	Processor Extension Request
45	$\overline{\text{ERROR}}$	Error Status
46	RESET	Reset
49	$\overline{\text{BUSY}}$	Busy Status
59	$\overline{\text{LOCK}}$	Bus Lock
60	W/$\overline{\text{R}}$	Write/ Read
63	M/$\overline{\text{IO}}$	Memory I/O
64	D/$\overline{\text{C}}$	Data Control
67, 71, 72, 74	$\overline{\text{BE2}}$, $\overline{\text{BE0}}$, $\overline{\text{BE3}}$, $\overline{\text{BE1}}$	Byte Enables
78	$\overline{\text{BS16}}$	Bus Size 16
75	$\overline{\text{NA}}$	Next Address
79	HOLD	Bus Hold Request
80	CLK2	CPU Clock 2
81	$\overline{\text{ADS}}$	Address Staus
83	$\overline{\text{READY}}$	Bus Ready Input
85, 87, 89, 90, 93, 94, 97, 98, 102, 104, 105, 108, 109, 112, 113, 115, 116, 119, 120, 121, 123, 124, 127, 128, 131, 132, 135, 136, 139, 140, 143, 144,	D1, D2, D4, D0, D6, D3, D8, D5, D7, D10, D9, D12, D11, D14, D13, D15, D16, D18, D17, D20, D22, D19, D24, D21, D25,D23, D27, D26, D29, D28, D31, D30,	Data Bus
101	HLDA	Bus Hold Acknowledge

©2001 Maxwell Technologies
All rights reserved.

TABLE 2. 80386DX ABSOLUTE MAXIMUM RATINGS

PARAMETER	SYMBOL	MIN	MAX	UNIT
Supply Voltage with Respect to Ground	V_{SS}	-0.5	6.5	V
Voltage on other pins		-0.5	V_{CC} +0.5	V
Thermal Impedance	Θ_{JC}	--	1.79	°C/W
Operating Temperature Range (Ambient)	T_A	-55	125	°C
Storage Temperature Range (Ambient)	T_S	-65	150	°C

TABLE 3. DELTA LIMITS

PARAMETER	VARIATION
I_{CC}	±10% of specified value in Table 4
I_{LI}	±10% of specified value in Table 4
I_{LO}	±10% of specified value in Table 4

TABLE 4. 80386DX RECOMMENDED OPERATING CONDITIONS

PARAMETER	SYMBOL	MIN	MAX	UNIT
Digital Supply Voltage	V_{CC}	4.75	5.25	V
Input Low Voltage	V_{IL}	--	0.8	V
Input High Voltage	V_{IH}	2.0	--	V
CLK2 Input Low Voltage	V_{ILC}	--	0.8	V
CLK2 Input High Voltage	V_{IHC}	V_{CC} - 0.8	--	V
Operating Temperature Range	T_A	-55	+125	°C

TABLE 5. 80386DX DC ELECTRICAL CHARACTERISTICS

(V_{CC} = +5V ±5%; T_A = -55°C TO +125°C, UNLESS OTHERWISE SPECIFIED)

PARAMETER	SYMBOL	CONDITION	MIN	MAX	UNIT
Input Leakage Current	I_{LI}	All pins except $\overline{BS16}$, PEREQ, $\overline{BUSY}$, and $\overline{ERROR}$ $0V \le V_{IN} \le V_{CC}$	-15	+15	µA
Output Leakage Current	I_{LO}	$0.45V \le V_{OUT} \le V_{CC}$	-15	+15	µA
Output Low Voltage	V_{OL}	I_{OL} = 4 mA: A2 - A31, D0 - D31	--	0.45	V
		I_{OL} = 5 mA: $\overline{BE0}$ - $\overline{BE3}$, W/$\overline{R}$, D/$\overline{C}$, M/$\overline{IO}$, $\overline{LOCK}$, $\overline{ADS}$, HLDA	--	0.45	
Output High Voltage	V_{OH}	I_{OH} = 1 mA: A2 - A31, D0 - D31	2.4	--	V
		I_{OH} = 0.9 mA: $\overline{BE0}$ - $\overline{BE3}$, W/$\overline{R}$, D/$\overline{C}$, M/$\overline{IO}$, $\overline{LOCK}$, $\overline{ADS}$, HLDA	2.4	--	

©2001 Maxwell Technologies
All rights reserved.

TABLE 5. 80386DX DC ELECTRICAL CHARACTERISTICS

(V_{CC} = +5V ±5%; T_A = -55°C TO +125°C, UNLESS OTHERWISE SPECIFIED)

PARAMETER	SYMBOL	CONDITION	MIN	MAX	UNIT
Power Supply Current	I_{CC}	CLK2 = 32 MHz with 16 MHz Processor	--	460	mA
		CLK2 = 32 MHz with 20 MHz Processor	--	550	
		CLK2 = 32 MHz with 25 MHz Processor	--	680	
Input Leakage Current	I_{IH}	PEREQ Pin[1]	--	200	µA
	I_{IL}	$\overline{BS16}$, $\overline{BUSY}$, $\overline{ERROR}$ Pins[2]	--	-400	µA
CLK2 Capacitance[3]	C_{CLK}	F_C = 1 MHz	--	20	pF
Input or I/O Capacitance[1]	C_{IN}	F_C = 1 MHz	--	20	pF
Output Capacitance[1]	C_{OUT}	F_C = 1 MHz	--	25	pF

1. V_{IH} = 2.4V. PEREQ input has an internal pulldown resistor.
2. V_{IL} = 0.45V. $\overline{BS16}$, $\overline{BUSY}$ and $\overline{ERROR}$ inputs have an internal pulldown resistor.
3. Guaranteed by design.

TABLE 6. 80386DX AC ELECTRICAL CHARACTERISTICS

(V_{CC} = +5V ±10%; V_{PP} = V_{SS}; T_A = -55°C TO +125°C, UNLESS OTHERWISE SPECIFIED)

PARAMETER	SYMBOL	CONDITION	MIN	MAX	UNIT
Operating Frequency	--	Half of CLK2 Frequency			MHz
-16			4	16	
-20			4	20	
-25			4	25	
CLK2 Period	t_1				ns
-16			31	125	
-20			25	125	
-25			20	125	
CLK2 High Time	t_{2a}	at 2V			ns
-16			9	--	
-20			8	--	
-25			7	--	
CLK2 High Time[1]	t_{2b}	at (V_{CC} - 0.8V)			ns
-16			5	--	
-20			5	--	
-25			4	--	
CLK2 Low Time	t_{3a}	at 2V			ns
-16			9	--	
-20			8	--	
-25			7	--	
CLK2 Low Time[1]	t_{3b}	at (V_{CC} - 0.8V)			ns
-16			7	--	
-20			6	--	
-25			5	--	

©2001 Maxwell Technologies
All rights reserved.

TABLE 6. 80386DX AC ELECTRICAL CHARACTERISTICS

(V_{CC} = +5V ±10%; V_{PP} = V_{SS}; T_A = -55°C TO +125°C, UNLESS OTHERWISE SPECIFIED)

PARAMETER	SYMBOL	CONDITION	MIN	MAX	UNIT
CLK2 Fall Time[1]	t_4	(V_{CC} - 0.8V) to 0.8V			ns
-16			--	8	
-20			--	8	
-25			--	7	
CLK2 Rise Time[1]	t_5	0.8V to (V_{CC} - 0.8V)			ns
-16			--	8	
-20			--	8	
-25			--	7	
A2 - A31 Valid Delay	t_6	C_L = 120pF (C_L = 50pF for 25 MHz)			ns
-16			4	36	
-20			4	30	
-25			4	21	
A2 - A31 Float Delay[1, 2]	t_7				ns
-16			4	40	
-20			4	32	
-25			4	30	
$\overline{BE0}$ - $\overline{BE3}$, $\overline{LOCK}$ Valid Delay	t_8	C_L = 75pF (C_L = 50pF for 25 MHz)			ns
-16			4	36	
-20			4	30	
-25			4	24	
$\overline{BE0}$ - $\overline{BE3}$, $\overline{LOCK}$ Float Delay[1, 2]	t_9				ns
-16			4	40	
-20			4	32	
-25			4	30	
W/$\overline{R}$, M/$\overline{IO}$, D/$\overline{C}$ and ADS Valid Delay	t_{10}	C_L = 75pF (C_L = 50pF for 25 MHz)			ns
-16			6	33	
-20			6	28	
-25			4	21	
W/$\overline{R}$, M/$\overline{IO}$, D/$\overline{C}$ and ADS Float Delay[1, 2]	t_{11}				ns
-16			6	35	
-20			6	30	
-25			4	30	
D0 - D31 Valid Delay	t_{12}	C_L = 120pF (C_L = 50pF for 25 MHz)			ns
-16			4	48	
-20			4	38	
-25			7	27	
D0 - D31 Float Delay[1, 2]	t_{13}				ns
-16			4	35	
-20			4	27	
-25			4	22	
HLDA Valid Delay	t_{14}	C_L = 75pF (C_L = 50pF for 25 MHz)			ns
-16			6	323	
-20			6	28	
-25			4	22	

©2001 Maxwell Technologies
All rights reserved.

TABLE 6. 80386DX AC ELECTRICAL CHARACTERISTICS

(V_{CC} = +5V ±10%; V_{PP} = V_{SS}; T_A = -55°C TO +125°C, UNLESS OTHERWISE SPECIFIED)

PARAMETER	SYMBOL	CONDITION	MIN	MAX	UNIT
$\overline{N/A}$ Setup Time	t_{15}				ns
-16			11	--	
-20			9	--	
-25			7	--	
$\overline{N/A}$ Hold Time	t_{16}				ns
-16			14	--	
-20			14	--	
-25			3	--	
$\overline{BS16}$ Setup Time	t_{17}				ns
-16			13	--	
-20			13	--	
-25			7	--	
$\overline{BS16}$ Hold Time	t_{18}				ns
-16			21	--	
-20			21	--	
-25			3	--	
$\overline{READY}$ Setup Time	t_{19}				ns
-16			21	--	
-20			12	--	
-25			9	--	
$\overline{READY}$ Hold Time	t_{20}				ns
-16			4	--	
-20			4	--	
-25			4	--	
D0 - D31 Read Setup Delay	t_{21}				ns
-16			11	--	
-20			11	--	
-25			6	--	
D0 - D31 Read Hold Delay	t_{22}				ns
-16			6	--	
-20			6	--	
-25			5	--	
HOLD Setup Time	t_{23}				ns
-16			26	--	
-20			17	--	
-25			15	--	
HOLD Hold Time	t_{24}				ns
-16			5	--	
-20			5	--	
-25			3	--	
RESET Setup Time	t_{25}				ns
-16			10	--	
-20			10	--	
-25			10	--	

©2001 Maxwell Technologies
All rights reserved.

TABLE 6. 80386DX AC ELECTRICAL CHARACTERISTICS

(V_{CC} = +5V ±10%; V_{PP} = V_{SS}; T_A = -55°C TO +125°C, UNLESS OTHERWISE SPECIFIED)

PARAMETER	SYMBOL	CONDITION	MIN	MAX	UNIT
RESET Hold Time	t_{26}				ns
-16			4	--	
-20			4	--	
-25			3	--	
NMI, INTR Setup Time[3]	t_{27}				ns
-16			16	--	
-20			16	--	
-25			6	--	
NMI, INTR Hold Time[3]	t_{28}				ns
-16			16	--	
-20			16	--	
-25			6	--	
REREQ, $\overline{\text{ERROR}}$, $\overline{\text{BUSY}}$ Setup Time[3]	t_{29}				ns
-16			16	--	
-20			14	--	
-25			6	--	
REREQ, $\overline{\text{ERROR}}$, $\overline{\text{BUSY}}$ Hold Time[3]	t_{30}				ns
-16			5	--	
-20			5	--	
-25			5	--	

1. Guaranteed by design.
2. Float condition occurs when maximum when output current becomes less than ILO in magnitude.
3. These inputs are allowed to be asynchronous to CLK2. The setup and hold specifications are given for testing purposes, to assure recognition within a specific CLK2 period.

©2001 Maxwell Technologies
All rights reserved.

FIGURE 1. AC TEST LOADS

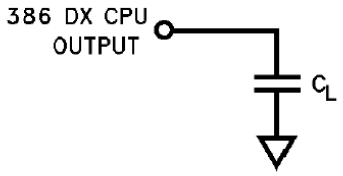

C_L = 120 pF on A2–A31, D0–D31
C_L = 75 pF on BE0#–BE3#, W/R#, M/IO#, D/C#, ADS#, LOCK#, HLDA
C_L includes all parasitic capacitances.

FIGURE 2. CLK2 TIMING

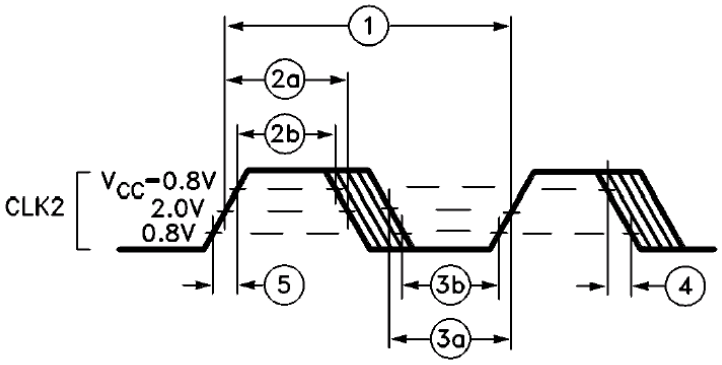

©2001 Maxwell Technologies
All rights reserved.

FIGURE 3. INPUT SETUP AND HOLD TIME

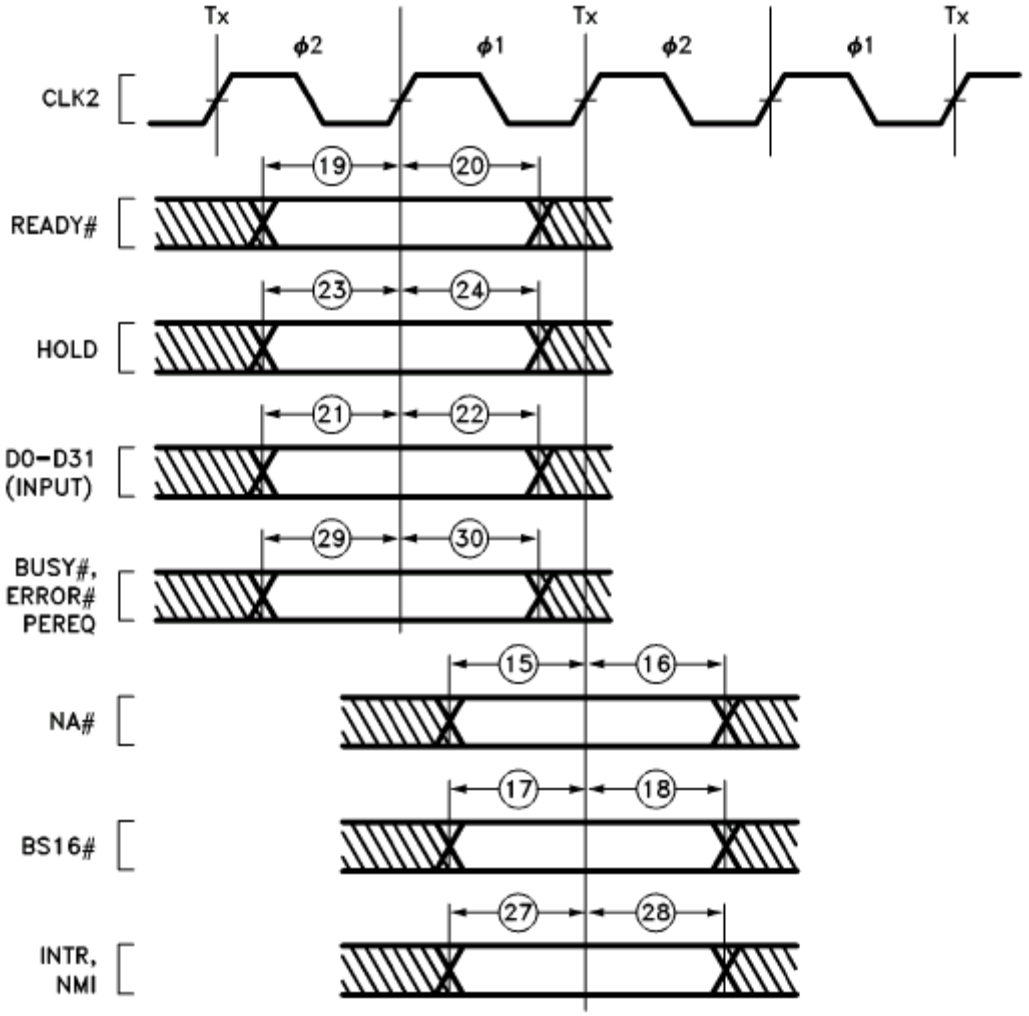

©2001 Maxwell Technologies
All rights reserved.

FIGURE 4. OUTPUT VALID DELAY TIMING

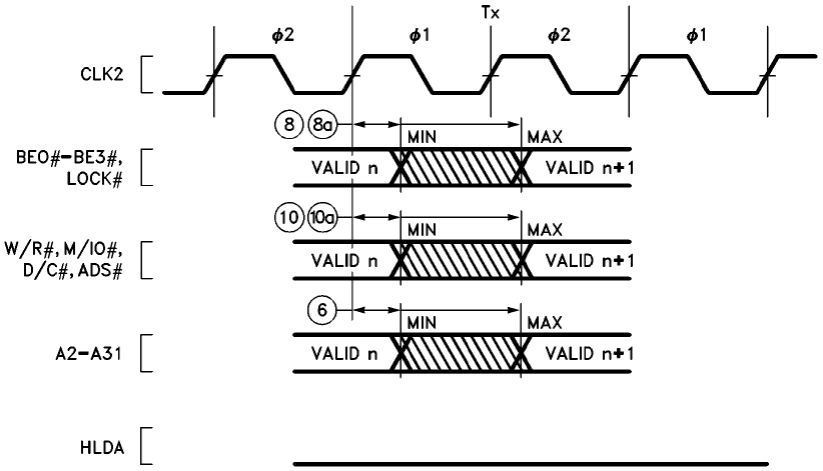

FIGURE 5. WRITE DATA VALID DELAY TIMING (25 MHZ)

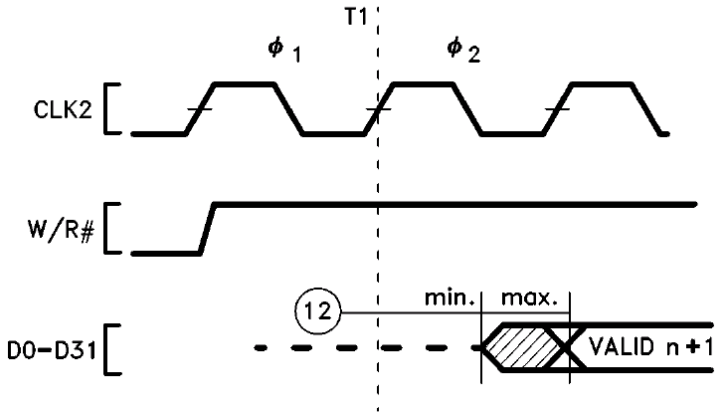

©2001 Maxwell Technologies
All rights reserved.

FIGURE 6. WRITE DATA HOLD TIMING (25 MHZ)

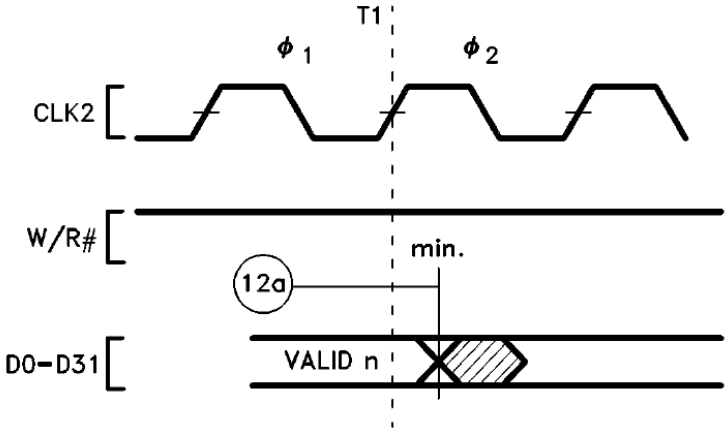

FIGURE 7. WRITE DATA VALID DELAY TIMING (20 MHZ)

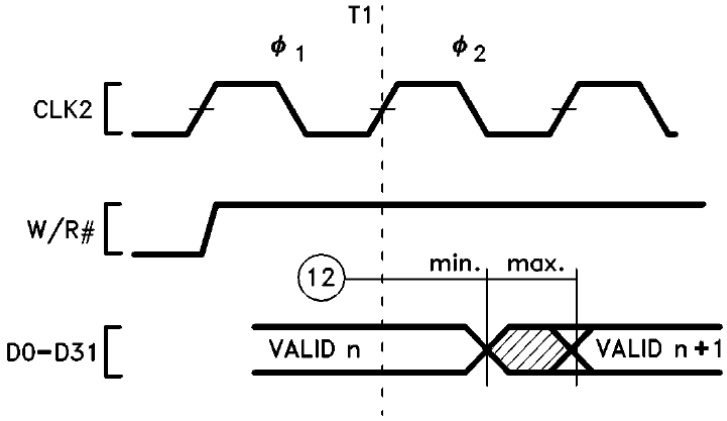

©2001 Maxwell Technologies
All rights reserved.

FIGURE 8. TYPICAL OUTPUT VALID DELAY VERSUS LOAD CAPACITANCE AT MAXIMUM OPERATING TEMPERATURE (C_L = 120 pF)

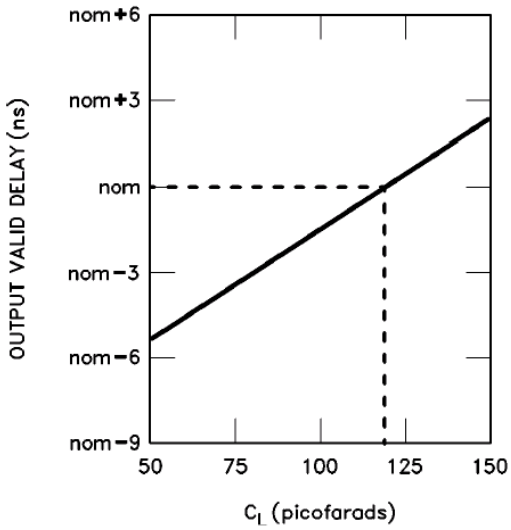

NOTE:
This graph will not be linear outside of the C_L range shown.

FIGURE 9. TYPICAL OUTPUT VALID DELAY VERSUS LOAD CAPACITANCE AT MAXIMUM OPERATING TEMPERATURE (C_L = 75 pF)

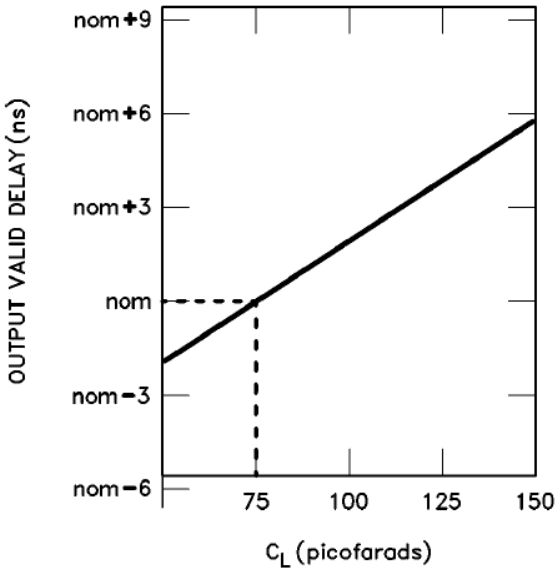

NOTE:
This graph will not be linear outside of the C_L range shown.

©2001 Maxwell Technologies
All rights reserved.

FIGURE 10. TYPICAL OUTPUT VALID DELAY VERSUS LOAD CAPACITANCE AT MAXIMUM OPERATING TEMPERATURE (C_L = 50 pF)

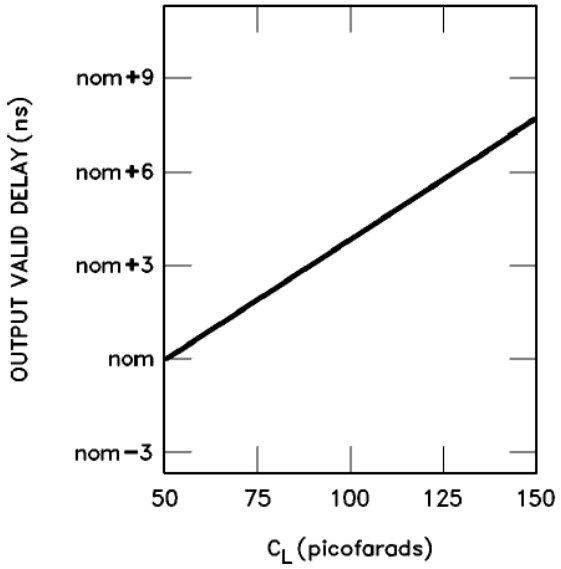

NOTE:
This graph will not be linear outside of the C_L range shown.

FIGURE 11. TYPICAL OUTPUT RISE TIME VERSUS LOAD CAPACITANCE AT MAXIMUM OPERATING TEMPERATURE

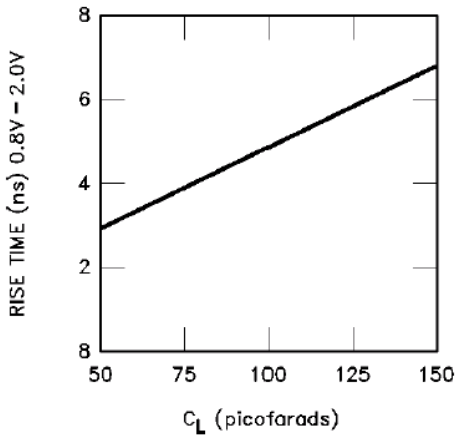

NOTE:
This graph will not be linear outside of the C_L range shown.

©2001 Maxwell Technologies
All rights reserved.

FIGURE 12. OUTPUT FLOAT DELAY AND HLDA AND DELAY TIMING

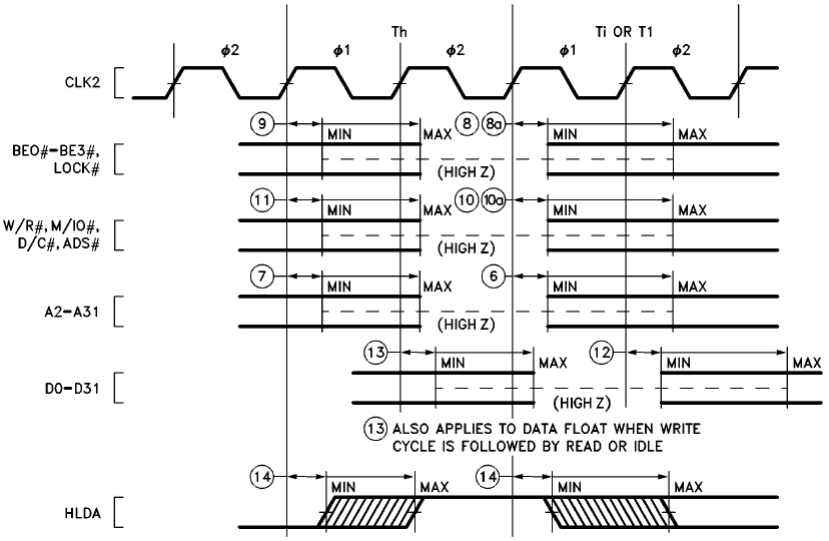

FIGURE 13. RESET SETUP AND HOLD TIMING, AND INTERNAL PHASE

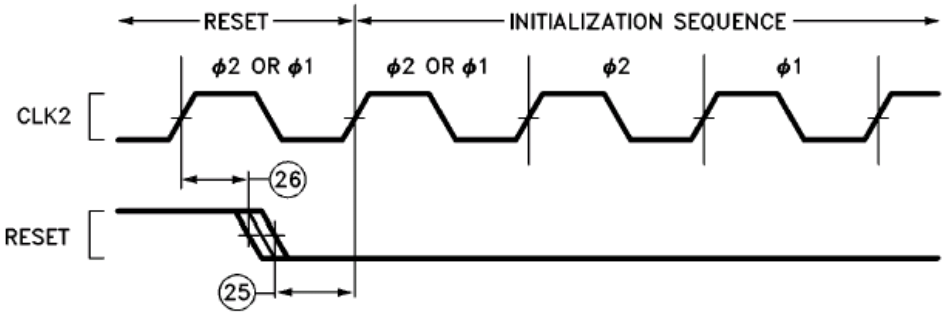

The second internal processor phase following RESET high-to-low transition (provided t_{25} and t_{26} are met) is ϕ2.

©2001 Maxwell Technologies
All rights reserved.

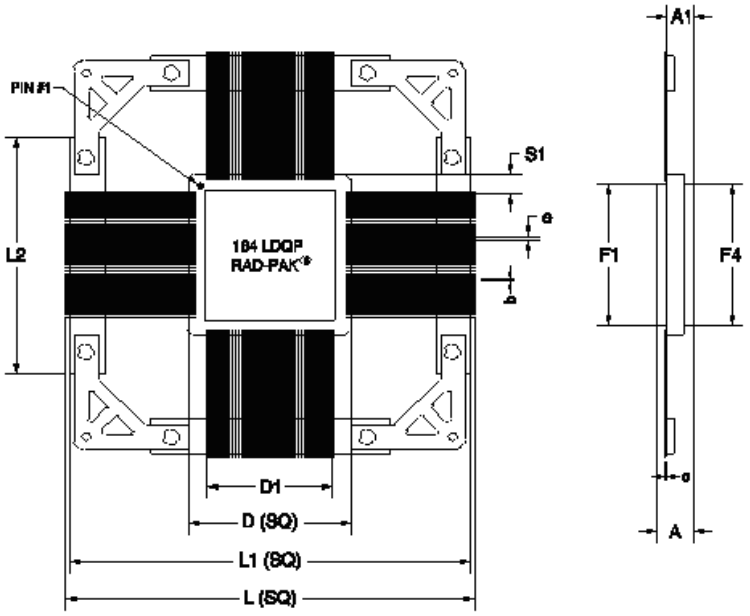

164-PIN RAD-PAK® QUAD FLAT PACKAGE

SYMBOL	DIMENSION		
	MIN	NOM	MAX
A	0.118	0.132	0.146
b	0.007	0.008	0.013
c	0.004	0.006	0.009
D	1.138	1.150	1.167
D1	1.000 BSC		
e	0.025 BSC		
S1	0.013	0.071	--
F1	0.890	0.895	0.900
F4	0.880	0.890	0.899
L	2.500	2.520	2.540
L1	2.485	2.500	2.505
L2	1.690	1.700	1.710
A1	0.078	0.090	0.102
N	164		

Q164-01
Note: All dimensions in inches

©2001 Maxwell Technologies
All rights reserved.

Important Notice:

These data sheets are created using the chip manufacturer's published specifications. Maxwell Technologies verifies functionality by testing key parameters either by 100% testing, sample testing or characterization.

The specifications presented within these data sheets represent the latest and most accurate information available to date. However, these specifications are subject to change without notice and Maxwell Technologies assumes no responsibility for the use of this information.

Maxwell Technologies' products are not authorized for use as critical components in life support devices or systems without express written approval from Maxwell Technologies.

Any claim against Maxwell Technologies must be made within 90 days from the date of shipment from Maxwell Technologies. Maxwell Technologies' liability shall be limited to replacement of defective parts.

©2001 Maxwell Technologies
All rights reserved.

Product Ordering Options

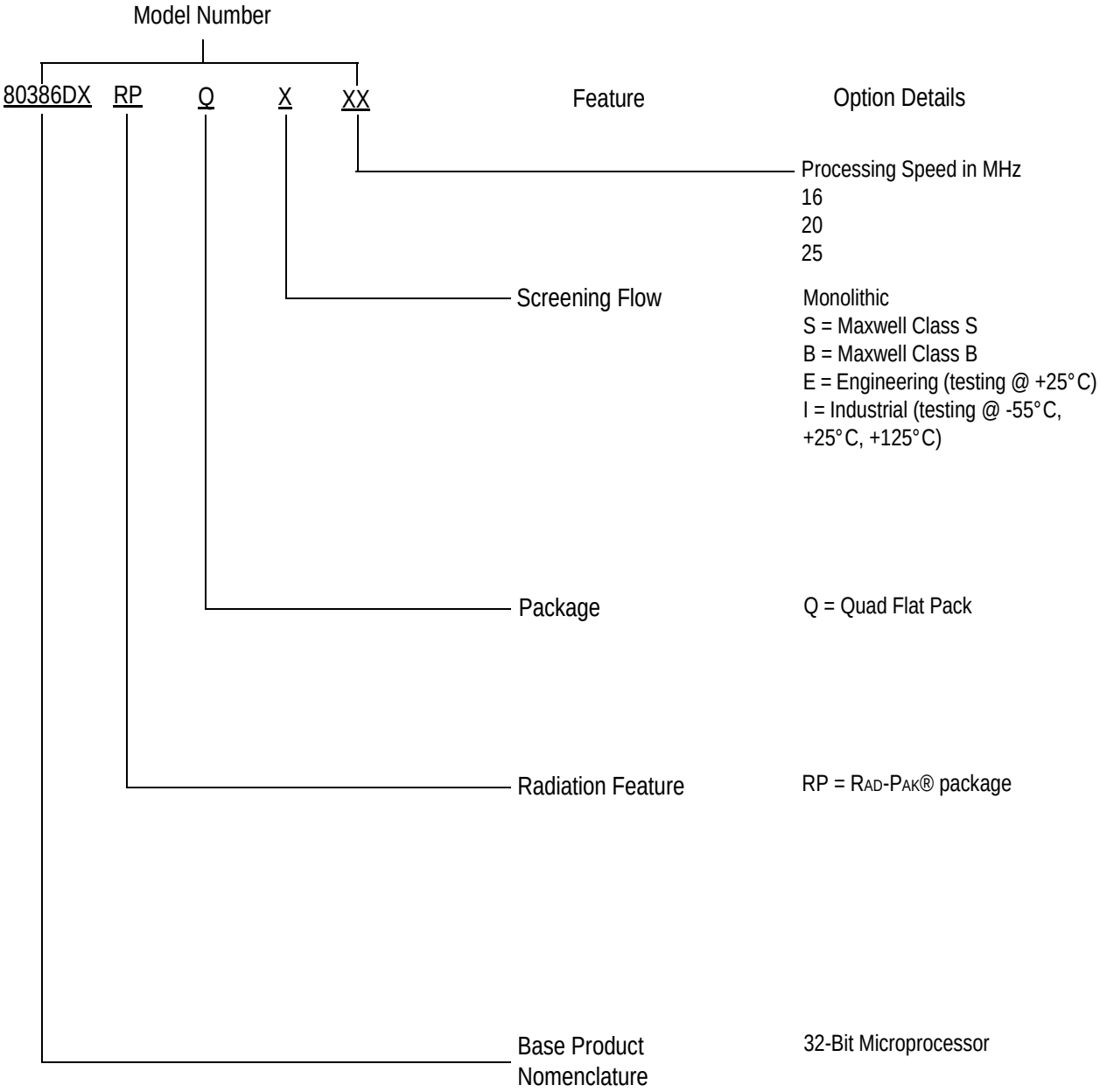

©2001 Maxwell Technologies
All rights reserved.

Мы молодая и активно развивающаяся компания в области поставок электронных компонентов. Мы поставляем электронные компоненты отечественного и импортного производства напрямую от производителей и с крупнейших складов мира.

Благодаря сотрудничеству с мировыми поставщиками мы осуществляем комплексные и плановые поставки широчайшего спектра электронных компонентов.

Собственная эффективная логистика и склад в обеспечивает надежную поставку продукции в точно указанные сроки по всей России.

Мы осуществляем техническую поддержку нашим клиентам и предпродажную проверку качества продукции. На все поставляемые продукты мы предоставляем гарантию .

Осуществляем поставки продукции под контролем ВП МО РФ на предприятия военно-промышленного комплекса России , а также работаем в рамках 275 ФЗ с открытием отдельных счетов в уполномоченном банке. Система менеджмента качества компании соответствует требованиям ГОСТ ISO 9001.

Минимальные сроки поставки, гибкие цены, неограниченный ассортимент и индивидуальный подход к клиентам являются основой для выстраивания долгосрочного и эффективного сотрудничества с предприятиями радиоэлектронной промышленности, предприятиями ВПК и научно-исследовательскими институтами России.

С нами вы становитесь еще успешнее!

Наши контакты:

Телефон: +7 812 627 14 35

Электронная почта: sales@st-electron.ru

Адрес: 198099, Санкт-Петербург, Промышленная ул, дом № 19, литера Н, помещение 100-Н Офис 331