Cree® XLamp® CXA1507 LED

PRODUCT DESCRIPTION

The XLamp CXA1507 LED array expands Cree's family of high-flux, multi-die arrays in a smaller, easy-to-use platform. With XLamp lighting-class reliability, the CXA1507's small, uniform emitting surface enables both directional and non-directional lighting applications including lamp retrofit and luminaire designs. Available in 2-step and 4-step color consistency, and featuring a 9-mm optical source, the CXA1507 brings new levels of flux and efficacy to this form factor.

FEATURES

- Available in ANSI white bins as well as 4-step and 2-step EasyWhite bins at 2700K, 3000K, 3500K, 4000K and 5000K CCT
- 80 and 90 minimum CRI options
- Forward voltage: 37 V
- 85 °C binning and characterization
- Maximum drive current: 375 mA
- 115° viewing angle, uniform chromaticity profile
- Top-side solder connections
- Thermocouple attach point
- NEMA SSL-3 2011 standard flux bins
- UL-recognized component (E349212)

TABLE OF CONTENTS

Characteristics 2
Flux Characteristics, Standard Order Codes and Bins 2
Flux Characteristics, Standard Order Codes and Bins, 90 CRI 4
Flux Characteristics, Standard Order Codes and Bins, 80 CRI 5
Relative Spectral Power Distribution . 6
Relative Luminous Flux vs. Junction Temperature 6
Electrical Characteristics 7
Relative Luminous Flux vs. Current .. 7
Relative Chromaticity vs. Current and Temperature 8
Typical Spatial Distribution 9
Performance Groups - Brightness 9
Performance Groups - Chromaticity . 10
Cree EasyWhite Bins Plotted on the 1931 CIE Color Space 11
Cree ANSI White Bins Plotted on the 1931 CIE Color Space 12
Bin and Order Code Formats 13
Mechanical Dimensions 13
Notes 14
Packaging 15

Copyright © 2012-2013 Cree, Inc. All rights reserved. The information in this document is subject to change without notice. Cree®, the Cree logo and XLamp® are registered trademarks of Cree, Inc.

Cree, Inc.
4600 Silicon Drive
Durham, NC 27703
USA Tel: +1.919.313.5300

CHARACTERISTICS

Characteristics	Unit	Minimum	Typical	Maximum
Effective thermal resistance, junction to case	°C/W		2.5	
Viewing angle (FWHM)	degrees		115	
ESD classification (HBM per Mil-Std-883D)			Class 2	
DC forward current	mA		200	375
Reverse current	mA			0.1
Forward voltage (@ 200 mA, 85 °C)	V		37	
Forward voltage (@ 200 mA, 25 °C)	V		38.4	42
LED junction temperature	°C			150
Temperature coefficient of voltage	mV/°C		-21	

FLUX CHARACTERISTICS, STANDARD ORDER CODES AND BINS (I_F = 200 mA, T_J = 85 °C)

The following tables provide order codes for XLamp CXA1507 LEDs. For a complete description of the order code nomenclature, please reference Bin and Order Code Formats (page 13).

Color	CCT Range	Base Order Codes Min. Luminous Flux @ 200 mA			2-Step Order Code		4-Step Order Code	
		Group	Flux (lm) @ 85 °C	Flux (lm) @ 25 °C*	Chromaticity Region		Chromaticity Region	
EasyWhite	5000K	G2	780	871	50H	CXA1507-0000-000N00G250H	50F	CXA1507-0000-000N00G250F
		G4	840	938		CXA1507-0000-000N00G450H		CXA1507-0000-000N00G450F
	4000K	F4	730	815	40H	CXA1507-0000-000N00F440H	40F	CXA1507-0000-000N00F440F
		G2	780	871		CXA1507-0000-000N00G240H		CXA1507-0000-000N00G240F
		G4	840	938		CXA1507-0000-000N00G440H		CXA1507-0000-000N00G440F
	3500K	F2	680	759	35H	CXA1507-0000-000N00F235H	35F	CXA1507-0000-000N00F235F
		F4	730	815		CXA1507-0000-000N00F435H		CXA1507-0000-000N00F435F
		G2	780	871		CXA1507-0000-000N00G235H		CXA1507-0000-000N00G235F
	3000K	F2	680	759	30H	CXA1507-0000-000N00F230H	30F	CXA1507-0000-000N00F230F
		F4	730	815		CXA1507-0000-000N00F430H		CXA1507-0000-000N00F430F
	2700K	E4	635	709	27H	CXA1507-0000-000N00E427H	27F	CXA1507-0000-000N00E427F
		F2	680	759		CXA1507-0000-000N00F227H		CXA1507-0000-000N00F227F
		F4	730	815		CXA1507-0000-000N00F427H		CXA1507-0000-000N00F427F

Notes:
- Cree maintains a tolerance of ±7% on flux and power measurements, ±0.005 on chromaticity (CCx, CCy) measurements and a tolerance of ±2 on CRI measurements.
- Minimum CRI for standard color temperatures 0E8, 27F, 27H, 0E7, 30F, 30H, 0E6, 35F, 35H is 80.
- Minimum CRI for standard color temperatures 0E5, 40F, 40H, 0E3, 50F, 50H is 70.
- Typical CRI for standard color temperatures 0E5, 40F, 40H, 0E3, 50F, 50H is 75.

* Flux values @ 25 °C are calculated and for reference only.

Copyright © 2012-2013 Cree, Inc. All rights reserved. The information in this document is subject to change without notice. Cree®, the Cree logo and XLamp® are registered trademarks of Cree, Inc.

Color	CCT Range	Base Order Codes Min. Luminous Flux @ 200 mA			Chromaticity Regions	Order Code
		Group	Flux (lm) @ 85 °C	Flux (lm) @ 25 °C*		
ANSI White	5000K	G2	780	871	3A0, 3B0, 3C0, 3D0	CXA1507-0000-000N00G20E3
		G4	840	938		CXA1507-0000-000N00G40E3
	4000K	F4	730	815	5A0, 5B0, 5C0, 5D0	CXA1507-0000-000N00F40E5
		G2	780	871		CXA1507-0000-000N00G20E5
		G4	840	938		CXA1507-0000-000N00G40E5
	3500K	F2	680	759	6A0, 6B0, 6C0, 6D0	CXA1507-0000-000N00F20E6
		F4	730	815		CXA1507-0000-000N00F40E6
		G2	780	871		CXA1507-0000-000N00G20E6
	3000K	F2	680	759	7A0, 7B0, 7C0, 7D0	CXA1507-0000-000N00F20E7
		F4	730	815		CXA1507-0000-000N00F40E7
	2700K	E4	635	709	8A0, 8B0, 8C0, 8D0	CXA1507-0000-000N00E40E8
		F2	680	759		CXA1507-0000-000N00F20E8
		F4	730	815		CXA1507-0000-000N00F40E8

Notes:

- Cree maintains a tolerance of ±7% on flux and power measurements, ±0.005 on chromaticity (CCx, CCy) measurements and a tolerance of ±2 on CRI measurements.
- Minimum CRI for standard color temperatures 0E8, 27F, 27H, 0E7, 30F, 30H, 0E6, 35F, 35H is 80.
- Minimum CRI for standard color temperatures 0E5, 40F, 40H, 0E3, 50F, 50H is 70.
- Typical CRI for standard color temperatures 0E5, 40F, 40H, 0E3, 50F, 50H is 75.

* Flux values @ 25 °C are calculated and for reference only.

Copyright © 2012-2013 Cree, Inc. All rights reserved. The information in this document is subject to change without notice. Cree®, the Cree logo and XLamp® are registered trademarks of Cree, Inc.

FLUX CHARACTERISTICS, STANDARD ORDER CODES AND BINS, 90 CRI (I_F = 200 mA, T_J= 85 °C)

The following tables provide order codes for XLamp CXA1507 90 CRI minimum LEDs. For a complete description of the order code nomenclature, please reference Bin and Order Code Formats (page 13).

Color	CCT Range	Base Order Codes Min. Luminous Flux @ 200 mA			2-Step Order Code		4-Step Order Code	
		Group	Flux (lm) @ 85 °C	Flux (lm) @ 25 °C*	Chromaticity Region		Chromaticity Region	
EasyWhite	3000K	D4	550	614	30H	CXA1507-0000-000N0UD430H	30F	CXA1507-0000-000N0UD430F
		E2	590	659		CXA1507-0000-000N0UE230H		CXA1507-0000-000N0UE230F
	2700K	C4	475	530	27H	CXA1507-0000-000N0UC427H	27F	CXA1507-0000-000N0UC427F
		D2	510	569		CXA1507-0000-000N0UD227H		CXA1507-0000-000N0UD227F
		D4	550	614		CXA1507-0000-000N0UD427H		CXA1507-0000-000N0UD427F

Color	CCT Range	Base Order Codes Min Luminous Flux @ 200 mA			Chromaticity Regions	Order Code
		Group	Flux (lm) @ 85 °C	Flux (lm) @ 25 °C*		
ANSI White	3000K	D4	550	614	7A0, 7B0, 7C0, 7D0	CXA1507-0000-000N0UD40E7
		E2	590	659		CXA1507-0000-000N0UE20E7
	2700K	C4	475	530	8A0, 8B0, 8C0, 8D0	CXA1507-0000-000N0UC40E8
		D2	510	569		CXA1507-0000-000N0UD20E8
		D4	550	614		CXA1507-0000-000N0UD40E8

Notes:

- Cree maintains a tolerance of ±7% on flux and power measurements, ±0.005 on chromaticity (CCx, CCy) measurements and a tolerance of ±2 on CRI measurements.
- Minimum CRI for high CRI color temperatures 0E8, 27F, 27H, 0E7, 30F, 30H is 90.

* Flux values @ 25 °C are calculated and for reference only.

Copyright © 2012-2013 Cree, Inc. All rights reserved. The information in this document is subject to change without notice. Cree®, the Cree logo and XLamp® are registered trademarks of Cree, Inc.

FLUX CHARACTERISTICS, STANDARD ORDER CODES AND BINS, 80 CRI (I_F = 200 mA, T_J= 85 °C)

The following tables provide order codes for XLamp CXA1507 80 CRI minimum LEDs. For a complete description of the order code nomenclature, please reference Bin and Order Code Formats (page 13).

Color	CCT Range	Base Order Codes Min. Luminous Flux @ 200 mA			2-Step Order Code		4-Step Order Code	
		Group	Flux (lm) @ 85 °C	Flux (lm) @ 25 °C*	Chromaticity Region		Chromaticity Region	
EasyWhite	5000K	E4	635	709	50H	CXA1507-0000-000N0HE450H	50F	CXA1507-0000-000N0HE450F
		F2	680	759		CXA1507-0000-000N0HF250H		CXA1507-0000-000N0HF250F
		F4	730	815		CXA1507-0000-000N0HF450H		CXA1507-0000-000N0HF450F
	4000K	F2	680	759	40H	CXA1507-0000-000N0HF240H	40F	CXA1507-0000-000N0HF240F
		F4	730	815		CXA1507-0000-000N0HF440H		CXA1507-0000-000N0HF440F

Color	CCT Range	Base Order Codes Min Luminous Flux @ 200 mA			Chromaticity Regions	Order Code
		Group	Flux (lm) @ 85 °C	Flux (lm) @ 25 °C*		
ANSI White	5000K	E4	635	709	3A0, 3B0, 3C0, 3D0	CXA1507-0000-000N0HE40E3
		F2	680	759		CXA1507-0000-000N0HF20E3
		F4	730	815		CXA1507-0000-000N0HF40E3
	4000K	F2	680	759	5A0, 5B0, 5C0, 5D0	CXA1507-0000-000N0HF20E5
		F4	730	815		CXA1507-0000-000N0HF40E5

Notes:

- Cree maintains a tolerance of ±7% on flux and power measurements, ±0.005 on chromaticity (CCx, CCy) measurements and a tolerance of ±2 on CRI measurements.
- Minimum CRI for high CRI color temperatures 0E5, 40F, 40H, 0E3, 50F, 50H is 80.

* Flux values @ 25 °C are calculated and for reference only.

Copyright © 2012-2013 Cree, Inc. All rights reserved. The information in this document is subject to change without notice. Cree®, the Cree logo and XLamp® are registered trademarks of Cree, Inc.

RELATIVE SPECTRAL POWER DISTRIBUTION (I_F = 200 mA, T_J = 85 °C)

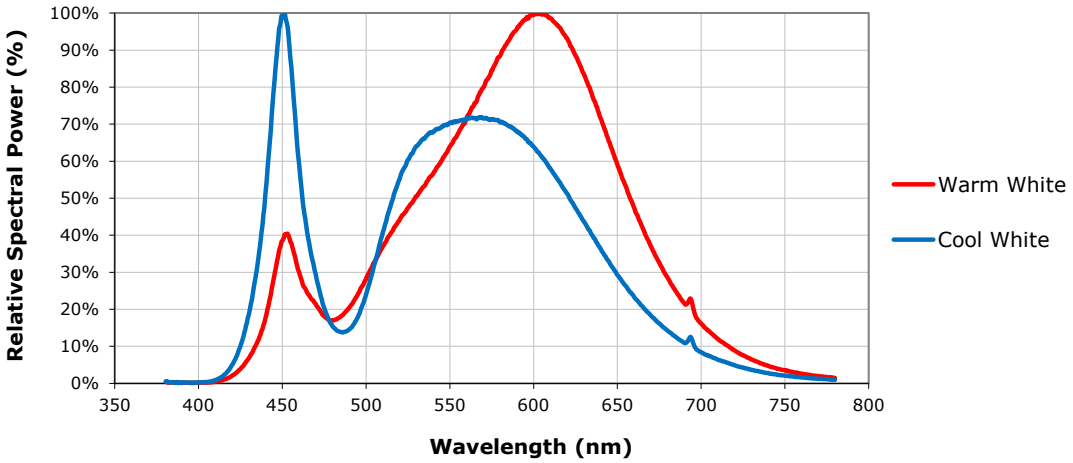

RELATIVE LUMINOUS FLUX VS. JUNCTION TEMPERATURE (I_F = 200 mA)

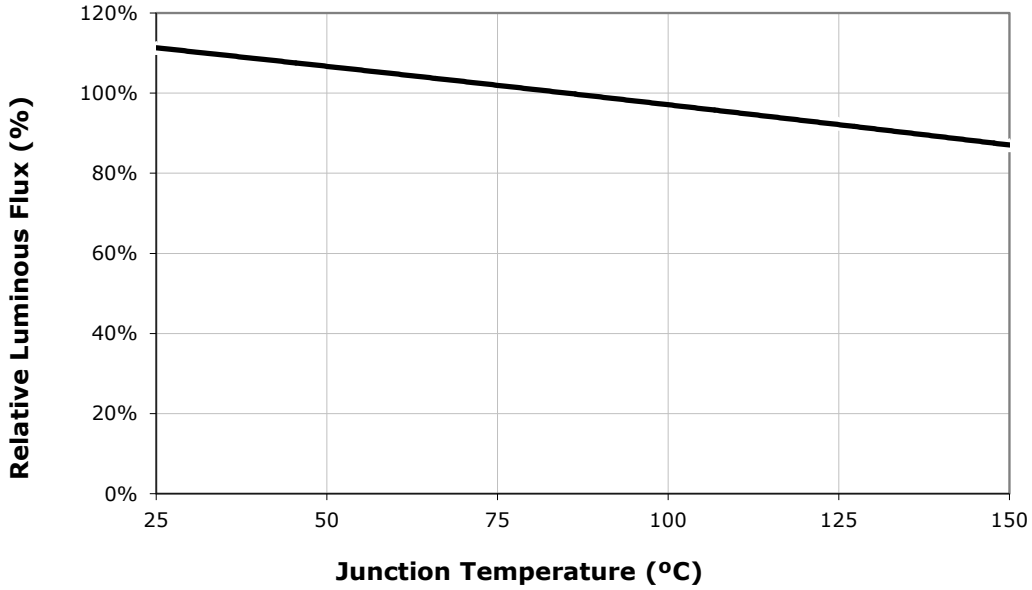

Copyright © 2012-2013 Cree, Inc. All rights reserved. The information in this document is subject to change without notice. Cree®, the Cree logo and XLamp® are registered trademarks of Cree, Inc.

ELECTRICAL CHARACTERISTICS (T_J = 85 °C)

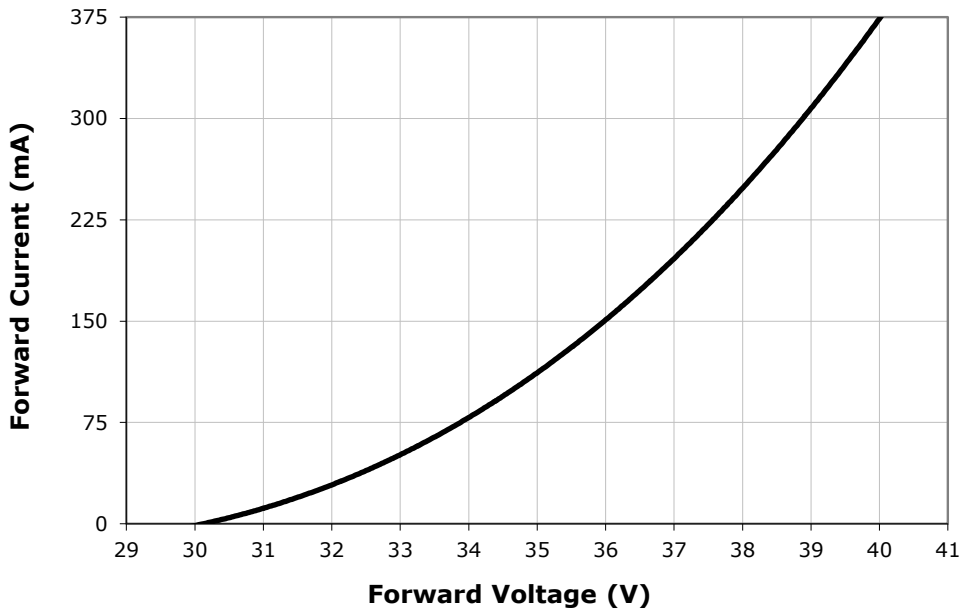

RELATIVE LUMINOUS FLUX VS. CURRENT (T_J = 85 °C)

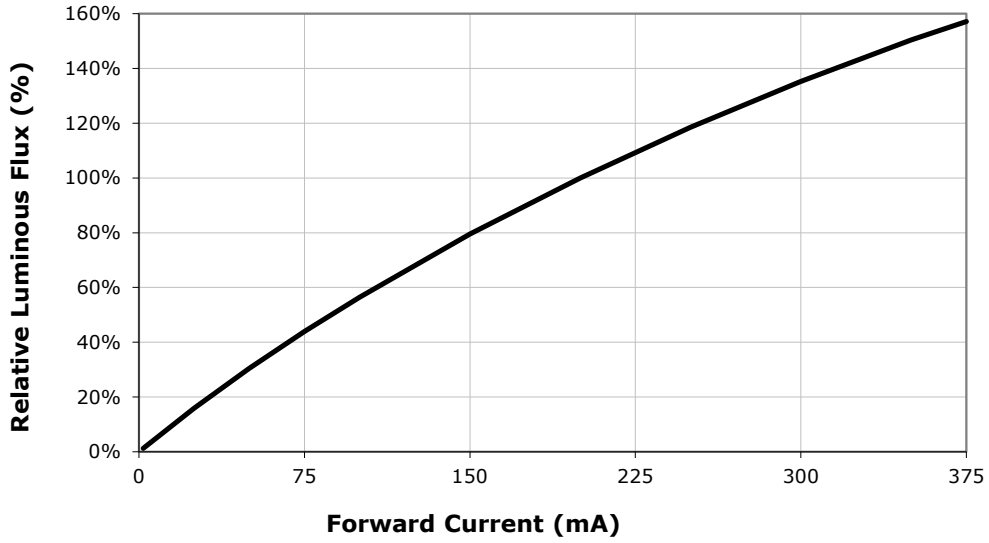

Copyright © 2012-2013 Cree, Inc. All rights reserved. The information in this document is subject to change without notice. Cree®, the Cree logo and XLamp® are registered trademarks of Cree, Inc.

RELATIVE CHROMATICITY VS. CURRENT AND TEMPERATURE (3000K, 80 CRI)

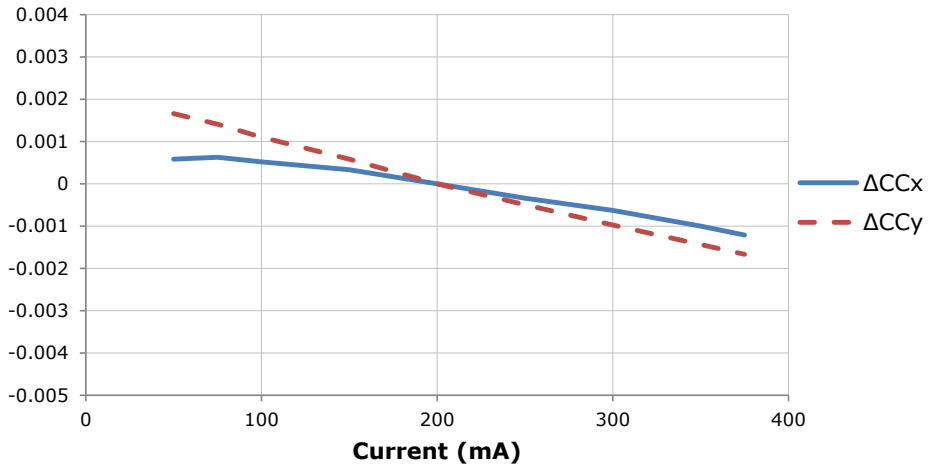

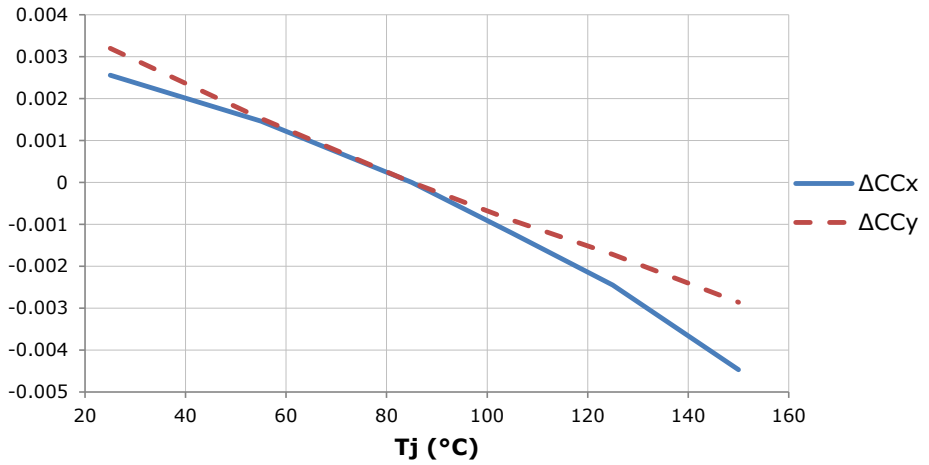

Copyright © 2012-2013 Cree, Inc. All rights reserved. The information in this document is subject to change without notice. Cree®, the Cree logo and XLamp® are registered trademarks of Cree, Inc.

TYPICAL SPATIAL DISTRIBUTION

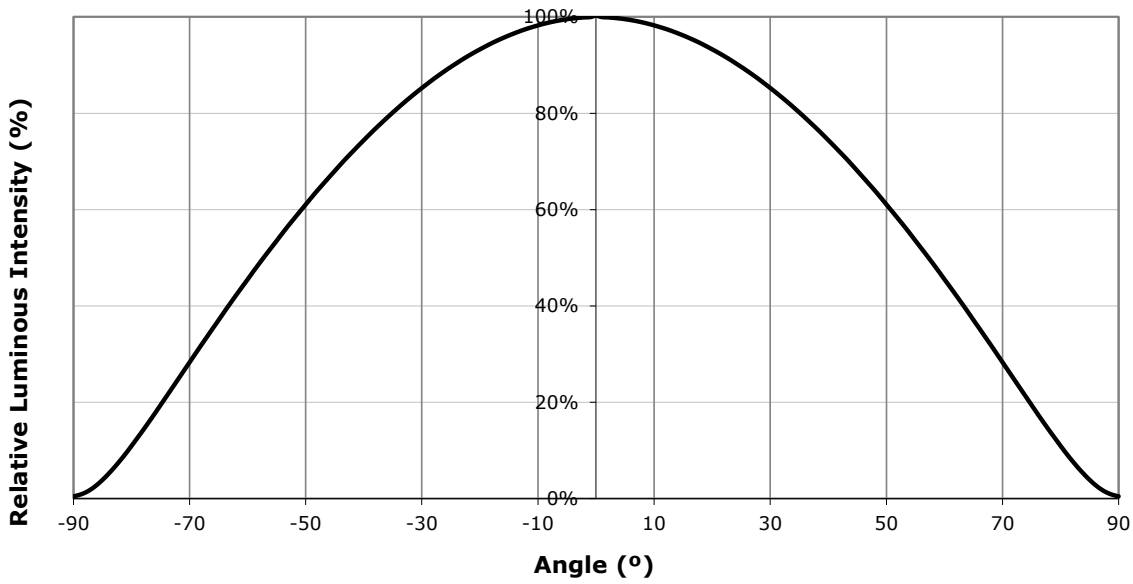

PERFORMANCE GROUPS - BRIGHTNESS (I_F = 200 mA, T_J = 85 °C)

XLamp CXA1507 LEDs are tested for luminous flux and placed into one of the following bins.

Group Code	Min. Luminous Flux @ 200 mA	Max. Luminous Flux @ 200 mA
C4	475	510
D2	510	550
D4	550	590
E2	590	635
E4	635	680
F2	680	730
F4	730	780
G2	780	840
G4	840	900

Copyright © 2012-2013 Cree, Inc. All rights reserved. The information in this document is subject to change without notice. Cree®, the Cree logo and XLamp® are registered trademarks of Cree, Inc.

PERFORMANCE GROUPS - CHROMATICITY (T_J = 85 °C)

XLamp CXA1507 LEDs are tested for chromaticity and placed into one of the regions defined by the following bounding coordinates.

EasyWhite Color Temperatures – 4-Step			
Code	CCT	x	y
50F	5000K	0.3407	0.3459
		0.3415	0.3586
		0.3499	0.3654
		0.3484	0.3521
40F	4000K	0.3744	0.3685
		0.3782	0.3837
		0.3912	0.3917
		0.3863	0.3758
35F	3500K	0.3981	0.3800
		0.4040	0.3966
		0.4186	0.4037
		0.4116	0.3865
30F	3000K	0.4242	0.3919
		0.4322	0.4096
		0.4449	0.4141
		0.4359	0.3960
27F	2700K	0.4475	0.3994
		0.4573	0.4178
		0.4695	0.4207
		0.4589	0.4021

EasyWhite Color Temperatures – 2-Step			
Code	CCT	x	y
50H	5000K	0.3429	0.3507
		0.3434	0.3571
		0.3475	0.3604
		0.3469	0.3539
40H	4000K	0.3784	0.3741
		0.3804	0.3818
		0.3867	0.3857
		0.3844	0.3778
35H	3500K	0.4030	0.3857
		0.4061	0.3941
		0.4132	0.3976
		0.4099	0.3890
30H	3000K	0.4291	0.3973
		0.4333	0.4062
		0.4395	0.4084
		0.4351	0.3994
27H	2700K	0.4528	0.4046
		0.4578	0.4138
		0.4638	0.4152
		0.4586	0.4060

ANSI White Bins				
Code	CCT	Bin Code	x	y
0E3	5000K	3A0	.3371	.3490
			.3451	.3554
			.3440	.3427
			.3366	.3369
		3B0	.3376	.3616
			.3463	.3687
			.3451	.3554
			.3371	.3490
		3C0	.3463	.3687
			.3551	.3760
			.3533	.3620
			.3451	.3554
		3D0	.3451	.3554
			.3533	.3620
			.3515	.3487
			.3440	.3427

ANSI White Bins				
Code	CCT	Bin Code	x	y
0E5	4000K	5A0	.3670	.3578
			.3702	.3722
			.3825	.3798
			.3783	.3646
		5B0	.3702	.3722
			.3736	.3874
			.3869	.3958
			.3825	.3798
		5C0	.3825	.3798
			.3869	.3958
			.4006	.4044
			.3950	.3875
		5D0	.3783	.3646
			.3825	.3798
			.3950	.3875
			.3898	.3716

ANSI White Bins				
Code	CCT	Bin Code	x	y
0E6	3500K	6A0	.3889	.3690
			.3941	.3848
			.4080	.3916
			.4017	.3751
		6B0	.3941	.3848
			.3996	.4015
			.4146	.4089
			.4080	.3916
		6C0	.4080	.3916
			.4146	.4089
			.4299	.4165
			.4221	.3984
		6D0	.4017	.3751
			.4080	.3916
			.4221	.3984
			.4147	.3814

Copyright © 2012-2013 Cree, Inc. All rights reserved. The information in this document is subject to change without notice. Cree®, the Cree logo and XLamp® are registered trademarks of Cree, Inc.

ANSI White Bins				
Code	CCT	Bin Code	x	y
0E7	3000K	7A0	.4147	.3814
			.4221	.3984
			.4342	.4028
			.4259	.3853
		7B0	.4221	.3984
			.4299	.4165
			.4430	.4212
			.4342	.4028
		7C0	.4342	.4028
			.4430	.4212
			.4562	.4260
			.4465	.4071
		7D0	.4259	.3853
			.4342	.4028
			.4465	.4071
			.4373	.3893

ANSI White Bins				
Code	CCT	Bin Code	x	y
0E8	2700K	8A0	.4373	.3893
			.4465	.4071
			.4582	.4099
			.4483	.3919
		8B0	.4465	.4071
			.4562	.4260
			.4687	.4289
			.4582	.4099
		8C0	.4582	.4099
			.4687	.4289
			.4813	.4319
			.4700	.4126
		8D0	.4483	.3919
			.4582	.4099
			.4700	.4126
			.4593	.3944

CREE EASYWHITE BINS PLOTTED ON THE 1931 CIE COLOR SPACE (T_J = 85 °C)

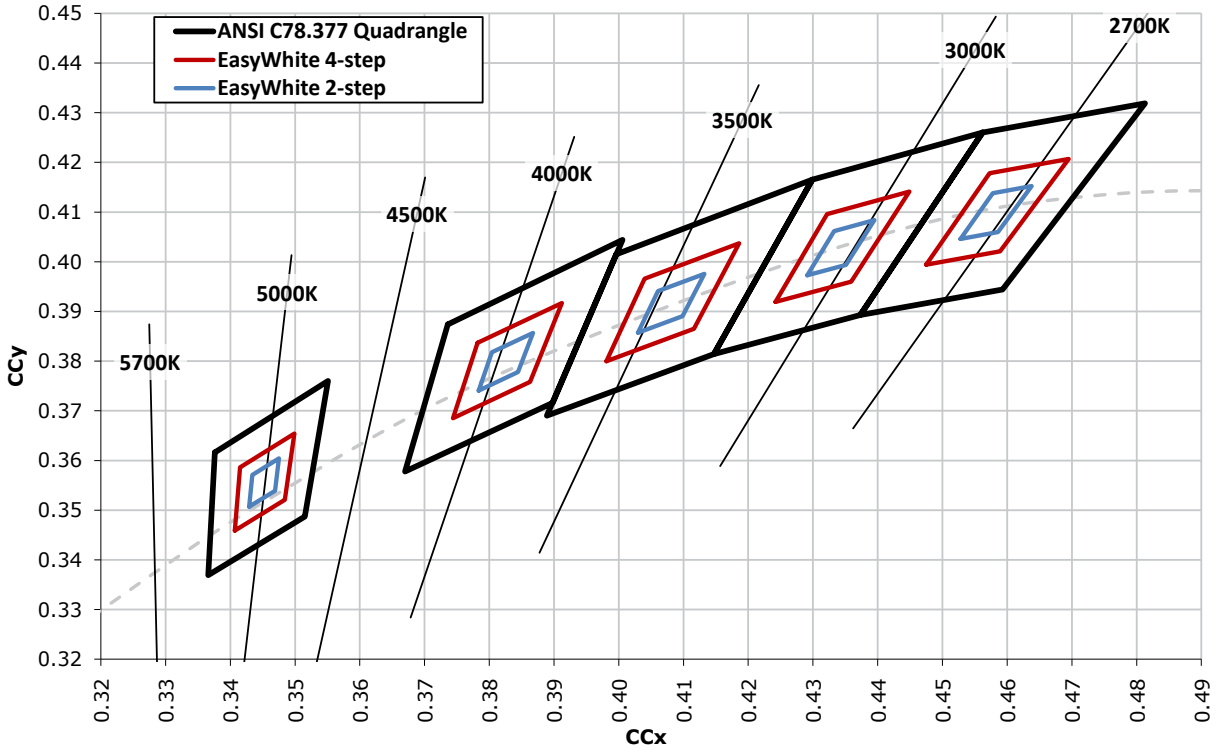

Copyright © 2012-2013 Cree, Inc. All rights reserved. The information in this document is subject to change without notice. Cree®, the Cree logo and XLamp® are registered trademarks of Cree, Inc.

CREE ANSI WHITE BINS PLOTTED ON THE 1931 CIE COLOR SPACE (T_J = 85 °C)

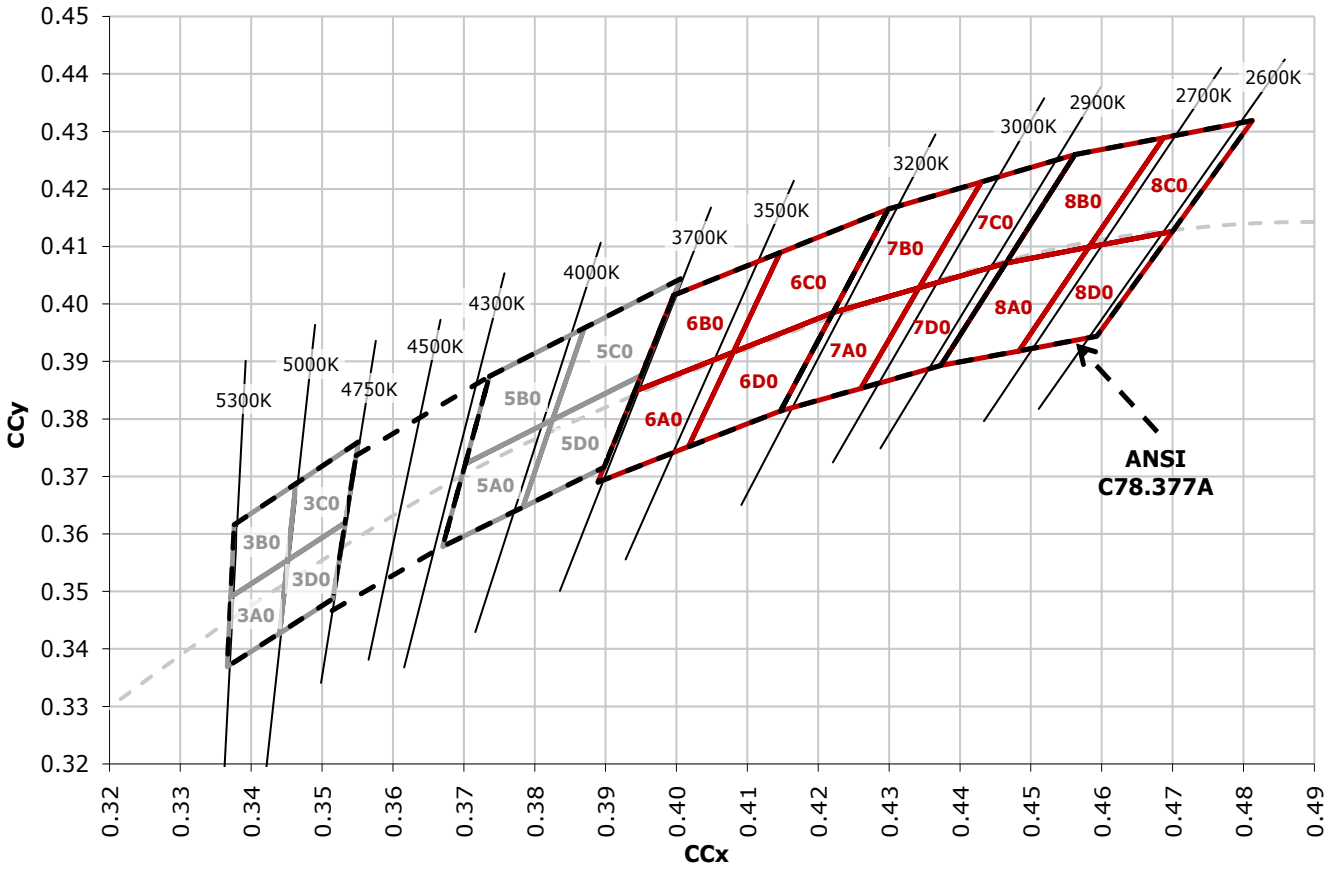

Copyright © 2012-2013 Cree, Inc. All rights reserved. The information in this document is subject to change without notice. Cree®, the Cree logo and XLamp® are registered trademarks of Cree, Inc.

BIN AND ORDER CODE FORMATS

Bin codes and order codes are configured as follows:

Order Code

SSSSSCC-HHHH-HHHGGNNNNNN

- Series = CXA15
- Internal code
- CRI Specification
  - H = 80 min CRI (4000 K & 5000 K)
  - U = 90 min CRI (2700 K & 3000 K)
  - 0 = Standard CRI
- Kit code
- Vf class: N0 = 36-V class
- Performance class

Bin Code

SSSSSCC-WWW-FF-GGR-AAAAA

- Series = CXA15
- Chromaticity bin
- Vf class: N0 = 36-V class
- Internal code
- CRI Specification
  - B = 70 min CRI
  - H = 80 min CRI
  - U = 90 min CRI
- Flux bin
- Performance class

MECHANICAL DIMENSIONS

Dimensions are in mm.
Tolerances unless otherwise specified:
.x ± .10
.xx ± .03
.xxx ± .010
x° ± 1°

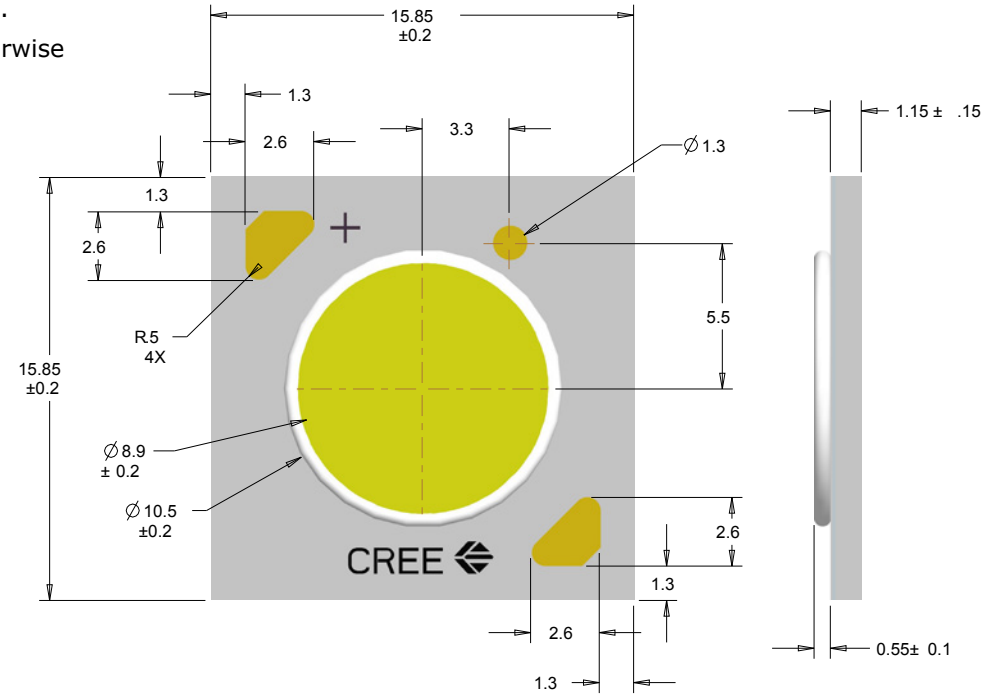

Copyright © 2012-2013 Cree, Inc. All rights reserved. The information in this document is subject to change without notice. Cree®, the Cree logo and XLamp® are registered trademarks of Cree, Inc.

NOTES

Lumen Maintenance Projections

Cree now uses standardized IES LM-80-08 and TM-21-11 methods for collecting long-term data and extrapolating LED lumen maintenance. For information on the specific LM-80 data sets available for this LED, refer to the public LM-80 results document at www.cree.com/xlamp_app_notes/LM80_results.

Please read the XLamp Long-Term Lumen Maintenance application note at www.cree.com/xlamp_app_notes/lumen_maintenance for more details on Cree's lumen maintenance testing and forecasting. Please read the XLamp Thermal Management application note at www.cree.com/xlamp_app_notes/thermal_management for details on how thermal design, ambient temperature, and drive current affect the LED junction temperature.

UL Recognized Component

Level 4 enclosure consideration. The LED package or a portion thereof has been investigated as a fire and electrical enclosure per ANSI/UL 8750.

Vision Advisory Claim

Users should be cautioned not to stare at the light of this LED product. The bright light can damage the eye.

Copyright © 2012-2013 Cree, Inc. All rights reserved. The information in this document is subject to change without notice. Cree®, the Cree logo and XLamp® are registered trademarks of Cree, Inc.

PACKAGING

Cree CXA1507 LEDs are packaged in tubes of 20, which are then combined in boxes of 5 tubes, or 100 LEDs. Boxes of 100 LEDs are of the same performance bin.

Dimensions are in mm.
Tolerances unless otherwise specified:
.x ± .10
.xx ± .03
.xxx ± .010
x° ± 1°

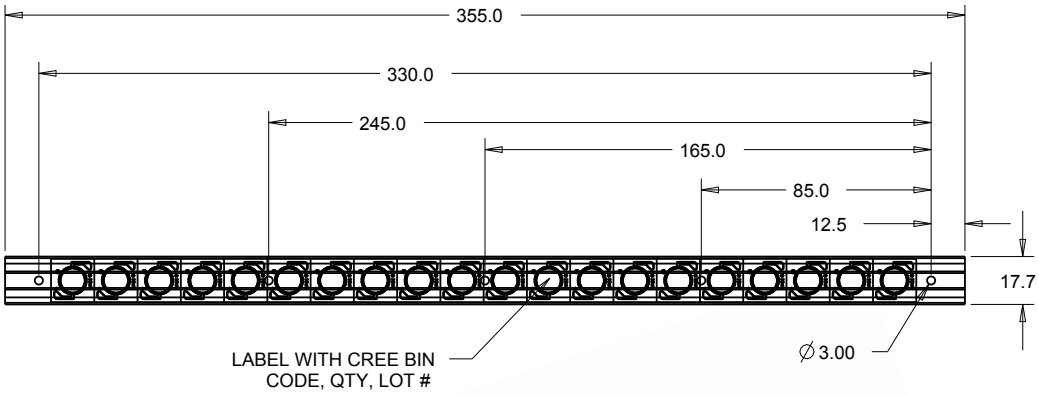

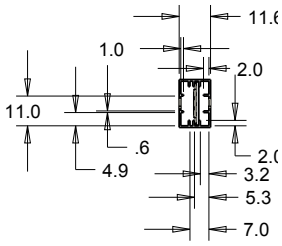

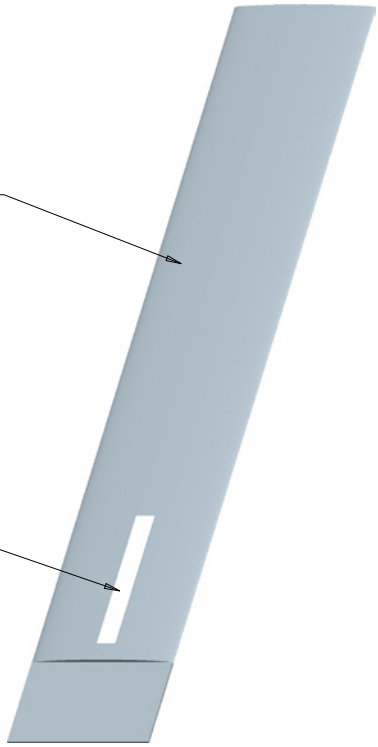

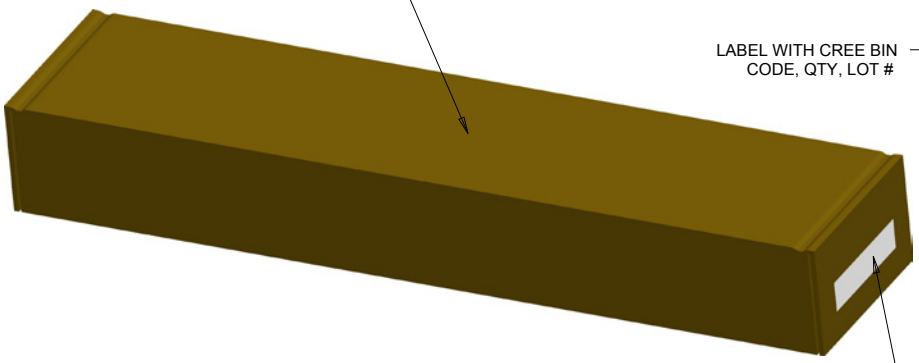

Copyright © 2012-2013 Cree, Inc. All rights reserved. The information in this document is subject to change without notice. Cree®, the Cree logo and XLamp® are registered trademarks of Cree, Inc.

Мы молодая и активно развивающаяся компания в области поставок электронных компонентов. Мы поставляем электронные компоненты отечественного и импортного производства напрямую от производителей и с крупнейших складов мира.

Благодаря сотрудничеству с мировыми поставщиками мы осуществляем комплексные и плановые поставки широчайшего спектра электронных компонентов.

Собственная эффективная логистика и склад в обеспечивает надежную поставку продукции в точно указанные сроки по всей России.

Мы осуществляем техническую поддержку нашим клиентам и предпродажную проверку качества продукции. На все поставляемые продукты мы предоставляем гарантию .

Осуществляем поставки продукции под контролем ВП МО РФ на предприятия военно-промышленного комплекса России , а также работаем в рамках 275 ФЗ с открытием отдельных счетов в уполномоченном банке. Система менеджмента качества компании соответствует требованиям ГОСТ ISO 9001.

Минимальные сроки поставки, гибкие цены, неограниченный ассортимент и индивидуальный подход к клиентам являются основой для выстраивания долгосрочного и эффективного сотрудничества с предприятиями радиоэлектронной промышленности, предприятиями ВПК и научно-исследовательскими институтами России.

С нами вы становитесь еще успешнее!

Наши контакты:

Телефон: +7 812 627 14 35

Электронная почта: sales@st-electron.ru

Адрес: 198099, Санкт-Петербург, Промышленная ул, дом № 19, литера Н, помещение 100-Н Офис 331