T494 Industrial Grade MnO_2

Overview

The KEMET T494 is a lower ESR version of the popular T491, designed specifically for today's highly automated surface mount processes and equipment. The T494 combines KEMET's proven solid tantalum technology, acclaimed and respected throughout the world, with the latest in materials, processes and automation, resulting in unsurpassed total performance and value. This product meets or exceeds the requirements of EIA standard 535BAAC. The T494 is classified as MSL (Moisture Sensitivity Level) 1 under J STD 020: unlimited floorlife time at ≤ 30°C/85% RH. The T494 standard terminations are available in 100% matte tin and provide excellent wetting characteristics and compatibility with today's surface mount solder systems. Tin/lead (Sn/Pb) terminations are available upon request for any part number. Gold-plated terminations are also available for use with conductive epoxy attachment processes. Standard packaging of these devices is tape-and-reel in accordance with EIA 481. This system provides perfect compatibility with all tape-fed placement units.

Benefits

- Meets or exceeds EIA Standard 535BAAC
- Taped and reeled per EIA 481
- Symmetrical, compliant terminations
- Optional gold-plated terminations
- Laser-marked case
- 100% surge current test on C, D, E, U, V, and X sizes
- Halogen-free epoxy
- Capacitance values of 0.1 to 1,000 µF
- Tolerances of ±10% and ±20%
- Voltage rating of 2.5 – 50 VDC
- Extended range values
- Low profile case sizes
- RoHS compliant and lead-free terminations
- Operating temperature range of −55°C to +125°C

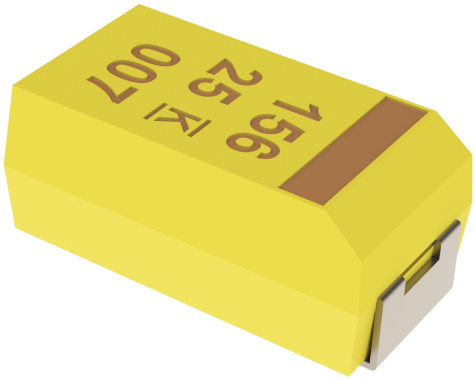

Click image above for interactive 3D content

Open PDF in Adobe Reader for full functionality

Applications

Typical applications include decoupling and filtering in many end applications, such as DC/DC converters, portable electronics, telecommunications, and control units.

Environmental Compliance

RoHS compliant (6/6) according to Directive 2002/95/EC when ordered with 100% Sn solder, Gold-plated or Non-magnetic 100% Sn solder.

© KEMET Electronics Corporation • KEMET Tower • One East Broward Boulevard
Fort Lauderdale, FL 33301 USA • 954-766-2800 • www.kemet.com

K-SIM

For a detailed analysis of specific part numbers, please visit ksim.kemet.com to access KEMET's K-SIM software. KEMET K-SIM is designed to simulate behavior of components with respect to frequency, ambient temperature, and DC bias levels.

Ordering Information

T	494	T	336	M	004	A	T	
Capacitor Class	Series	Case Size	Capacitance Code (pF)	Capacitance Tolerance	Rated Voltage (VDC)	Failure Rate/ Design	Termination Finish	Packaging (C-Spec)
T = Tantalum	Industrial – Low ESR	A, B, C, D, E, S, T, U, V, X	First two digits represent significant figures. Third digit specifies number of zeros.	K = ±10% M = ±20%	2R5 = 2.5 003 = 3 004 = 4 006 = 6.3 010 = 10 016 = 16 020 = 20 025 = 25 035 = 35 050 = 50	A = N/A	T = 100% Matte tin (Sn) plated H = Standard solder coated (SnPb 5% Pb minimum) G = Gold-plated (A, B, C, D, X only) N = Non-magnetic 100% tin (Sn) M = Non-magnetic (SnPb)	Blank = 7" reel 7280 = 13" reel

Performance Characteristics

Item	Performance Characteristics
Operating Temperature	−55°C to 125°C
Rated Capacitance Range	0.1 – 1,000 µF at 120 Hz/25°C
Capacitance Tolerance	K tolerance (10%), M tolerance (20%)
Rated Voltage Range	2.5 – 50 V
DF (120 Hz)	Refer to Part Number Electrical Specification Table
ESR (100 kHz)	Refer to Part Number Electrical Specification Table
Leakage Current	≤ 0.01 CV (µA) at rated voltage after 5 minutes

Qualification

Test	Condition		Characteristics			
Endurance	85°C at rated voltage, 2,000 hours 125°C at 2/3 rated voltage, 2,000 hours		Δ C/C	Within ±10% of initial value		
			DF	Within initial limits		
			DCL	Within 1.25 x initial limit		
			ESR	Within initial limits		
Storage Life	125°C at 0 volts, 2,000 hours		Δ C/C	Within ±10% of initial value		
			DF	Within initial limits		
			DCL	Within 1.25 x initial limit		
			ESR	Within initial limits		
Thermal Shock	MIL–STD–202, Method 107, Condition B, mounted, −55°C to 125°C, 1,000 cycles		Δ C/C	Within ±5% of initial value		
			DF	Within initial limits		
			DCL	Within 1.25 x initial limit		
			ESR	Within initial limits		
Temperature Stability	Extreme temperature exposure at a succession of continuous steps at +25°C, −55°C, +25°C, +85°C, +125°C, +25°C.		+25°C	−55°C	+85°C	+125°C
		Δ C/C	IL*	±10%	±10%	±20%
		DF	IL	IL	1.5 x IL	1.5 x IL
		DCL	IL	N/A	10 x IL	12 x IL
Surge Voltage	85°C, 1.32 x rated voltage 1,000 cycles (125°C, 1.2 x rated voltage).		Δ C/C	Within ±5% of initial value		
			DF	Within initial limits		
			DCL	Within initial limits		
			ESR	Within initial limits		
Mechanical Shock/ Vibration	MIL–STD–202, Method 213, Condition I, 100 G peak MIL–STD–202, Method 204, Condition D, 10 Hz to 2,000 Hz, 20 G peak		Δ C/C	Within ±10% of initial value		
			DF	Within initial limits		
			DCL	Within initial limits		

**IL = Initial limit*

Electrical Characteristics

ESR vs. Frequency

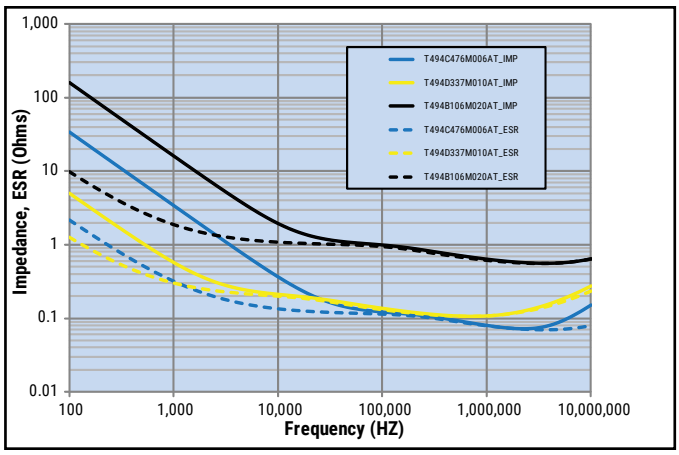

Capacitance vs. Frequency

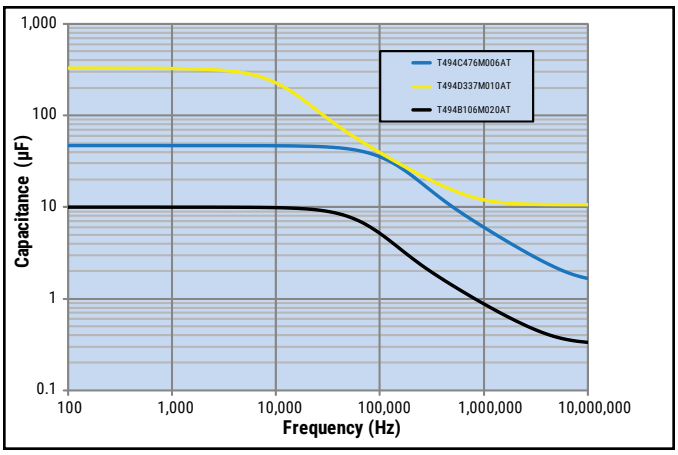

Dimensions – Millimeters (Inches)

Metric will govern

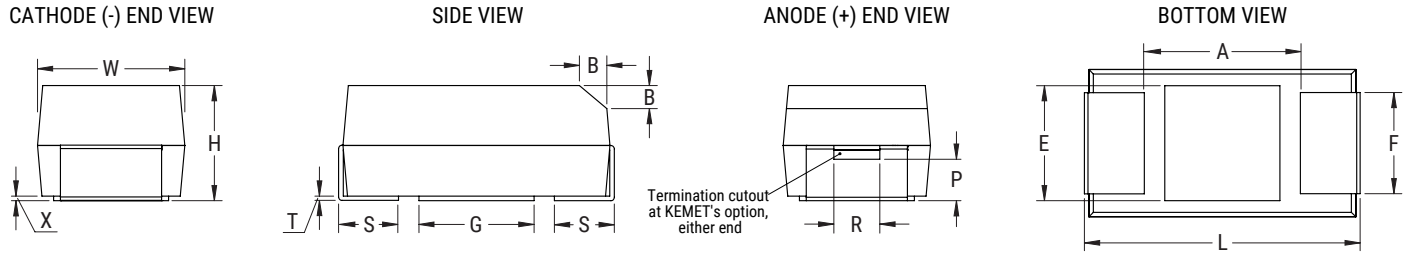

Case Size		Component												
KEMET	EIA	L	W	H	F ±0.1 ±(0.004)	S	B ±0.15 (Ref) ±0.006	X (Ref)	P (Ref)	R (Ref)	T (Ref)	A (Min)	G (Ref)	E (Ref)
A	3216–18	3.2 ±0.2 (0.126 ±0.008)	1.6 ±0.2 (0.063 ±0.008)	1.6 ±0.2 (0.063 ±0.008)	1.2 (0.047)	0.80 (0.032) +0.2 (0.008) /−0.3(0.011)	0.4 (0.016)	0.10 ±0.10 (0.004 ±0.004)	0.4 (0.016)	0.4 (0.016)	0.13 (0.005)	1.2 (0.047)	1.1 (0.043)	1.3 (0.051)
B	3528–21	3.5 ±0.2 (0.138 ±0.008)	2.8 ±0.2 (0.110 ±0.008)	1.9 ±0.2 (0.075 ±0.008)	2.2 (0.087)	0.80 (0.032) +0.1 (0.004) /−0.3(0.011)	0.4 (0.016)	0.10 ±0.10 (0.004 ±0.004)	0.5 (0.020)	1.0 (0.039)	0.13 (0.005)	1.9 (0.075)	1.8 (0.071)	2.2 (0.087)
C	6032–28	6.0 ±0.3 (0.236 ±0.012)	3.2 ±0.3 (0.126 ±0.012)	2.5 ±0.3 (0.098 ±0.012)	2.2 (0.087)	1.30 (0.051) ±0.3 (0.011)	0.5 (0.020)	0.10 ±0.10 (0.004 ±0.004)	0.9 (0.035)	1.0 (0.039)	0.13 (0.005)	2.9 (0.114)	2.8 (0.110)	2.4 (0.094)
D	7343–31	7.3 ±0.3 (0.287 ±0.012)	4.3 ±0.3 (0.169 ±0.012)	2.8 ±0.3 (0.110 ±0.012)	2.4 (0.094)	1.30 (0.051) ±0.3 (0.011)	0.5 (0.020)	0.10 ±0.10 (0.004 ±0.004)	0.9 (0.035)	1.0 (0.039)	0.13 (0.005)	3.6 (0.142)	3.5 (0.138)	3.5 (0.138)
X	7343–43	7.3 ±0.3 (0.287 ±0.012)	4.3 ±0.3 (0.169 ±0.012)	4.0 ±0.3 (0.157 ±0.012)	2.4 (0.094)	1.30 (0.051) ±0.3 (0.011)	0.5 (0.020)	0.10 ±0.10 (0.004 ±0.004)	1.7 (0.067)	1.0 (0.039)	0.13 (0.005)	3.6 (0.142)	3.5 (0.138)	3.5 (0.138)
E	7360-38	7.3 ±0.3 (0.287 ±0.012)	6.0 ±0.3 (0.236 ±0.012)	3.6 ±0.2 (0.142 ±0.008)	4.1 (0.161)	1.30 (0.051) ±0.3 (0.011)	0.5 (0.020)	0.10 ±0.10 (0.004 ±0.004)	N/A	N/A	0.13 (0.005)	3.6 (0.142)	3.5 (0.138)	3.5 (0.138)
S	3216–12	3.2 ±0.2 (0.126 ±0.008)	1.6 ±0.2 (0.063 ±0.008)	1.1 ±0.1 (0.043 ±0.004)	1.2 (0.047)	0.80 (0.032) +0.2 (0.008) /−0.3(0.011)	N/A	0.05 (0.002)	N/A	N/A	0.13 (0.005)	1.2 (0.047)	1.1 (0.043)	1.3 (0.051)
T	3528–12	3.5 ±0.2 (0.138 ±0.008)	2.8 ±0.2 (0.110 ±0.008)	1.1 ±0.1 (0.043 ±0.004)	2.2 (0.087)	0.80 (0.032) +0.1 (0.004) /−0.3(0.011)	N/A	0.05 (0.002)	N/A	N/A	0.13 (0.005)	1.9 (0.075)	1.8 (0.071)	2.2 (0.087)
U	6032–15	6.0 ±0.3 (0.236 ±0.012)	3.2 ±0.2 (0.110 ±0.008)	1.4 ±0.1 (0.055 ±0.004)	2.2 (0.087)	1.30 (0.051) ±0.3 (0.011)	N/A	0.05 (0.002)	N/A	N/A	0.13 (0.005)	2.9 (0.114)	2.8 (0.110)	2.4 (0.094)
V	7343-20	7.3 ±0.3 (0.287 ±0.012)	4.3 ±0.3 (0.169 ±0.012)	1.8 ±0.2 (0.071 ± 0.008)	2.4 (0.094)	1.30 (0.051) ±0.3 (0.011)	N/A	0.05 (0.002)	N/A	N/A	0.13 (0.005)	3.6 (0.142)	3.5 (0.138)	3.5 (0.138)

Notes: (Ref) – Dimensions provided for reference only. For low profile cases, no dimensions are provided for B, P or R because these cases do not have a bevel or a notch.

Table 1 – Ratings & Part Number Reference

Rated Voltage	Rated Cap	Case Code/ Case Size	KEMET Part Number	DC Leakage	DF	ESR	Maximum Allowable Ripple Current (rms)			Maximum Operating Temp	MSL
VDC at 85°C	µF	KEMET/EIA	(See below for part options)	µA at 20°C Max/5 Min	% at 20°C 120 Hz Max	Ω at 20°C 100 kHz Max	mA at 25°C 100 kHz	mA at 85°C 100 kHz	mA at 125°C 100 kHz	°C	Reflow Temp ≤ 260°C
2.5	100	T/3528-12	T494T107(1)2R5A(2)	2.5	24.0	3.5	141	127	56	125	1
2.5	220	D/7343-31	T494D227(1)2R5A(2)	5.5	8.0	0.2	866	779	346	125	1
3	33	A/3216-18	T494A336(1)003A(2)	1.0	6.0	2.0	194	175	78	125	1
4	3.3	A/3216-18	T494A335(1)004A(2)	0.5	6.0	4.0	137	123	55	125	1
4	4.7	A/3216-18	T494A475(1)004A(2)	0.5	6.0	3.5	146	131	58	125	1
4	6.8	A/3216-18	T494A685(1)004A(2)	0.5	6.0	3.0	158	142	63	125	1
4	6.8	S/3216-12	T494S685(1)004A(2)	0.5	6.0	7.0	93	84	37	125	1
4	10	B/3528-21	T494B106(1)004A(2)	0.5	6.0	1.2	266	239	106	125	1
4	10	A/3216-18	T494A106(1)004A(2)	0.5	6.0	2.0	194	175	78	125	1
4	10	S/3216-12	T494S106(1)004A(2)	0.5	6.0	9.0	82	74	33	125	1
4	15	B/3528-21	T494B156(1)004A(2)	0.6	6.0	1.2	266	239	106	125	1
4	15	A/3216-18	T494A156(1)004A(2)	0.6	6.0	1.5	224	202	90	125	1
4	15	T/3528-12	T494T156(1)004A(2)	0.6	6.0	2.0	187	168	75	125	1
4	15	S/3216-12	T494S156(M)004A(2)	0.6	10.0	9.0	82	74	33	125	1
4	22	C/6032-28	T494C226(1)004A(2)	0.9	6.0	0.5	469	422	188	125	1
4	22	B/3528-21	T494B226(1)004A(2)	0.9	6.0	0.6	376	338	150	125	1
4	22	A/3216-18	T494A226(1)004A(2)	0.9	6.0	1.5	224	202	90	125	1
4	22	S/3216-12	T494S226(M)004A(2)	0.9	10.0	8.0	87	78	35	125	1
4	22	T/3528-12	T494T226(1)004A(2)	0.9	6.0	2.5	167	150	67	125	1
4	33	C/6032-28	T494C336(1)004A(2)	1.3	6.0	0.5	469	422	188	125	1
4	33	U/6032-15	T494U336(1)004A(2)	1.3	6.0	0.6	387	348	155	125	1
4	33	B/3528-21	T494B336(1)004A(2)	1.3	6.0	0.5	412	371	165	125	1
4	33	A/3216-18	T494A336(1)004A(2)	1.3	6.0	3.0	158	142	63	125	1
4	33	T/3528-12	T494T336(M)004A(2)	1.3	8.0	3.5	141	127	56	125	1
4	47	C/6032-28	T494C476(1)004A(2)	1.9	6.0	0.5	469	422	188	125	1
4	47	U/6032-15	T494U476(1)004A(2)	1.9	6.0	0.6	387	348	155	125	1
4	47	B/3528-21	T494B476(1)004A(2)	1.9	6.0	0.5	412	371	165	125	1
4	47	A/3216-18	T494A476(M)004A(2)	1.9	12.0	2.0	194	175	78	125	1
4	47	T/3528-12	T494T476(M)004A(2)	1.9	12.0	4.0	132	119	53	125	1
4	68	D/7343-31	T494D686(1)004A(2)	2.7	6.0	0.20	866	779	346	125	1
4	68	C/6032-28	T494C686(1)004A(2)	2.7	6.0	0.25	663	597	265	125	1
4	68	U/6032-15	T494U686(1)004A(2)	2.7	6.0	0.60	387	348	155	125	1
4	68	B/3528-21	T494B686(1)004A(2)	2.7	6.0	2.00	206	185	82	125	1
4	68	A/3216-18	T494A686(1)004A(2)	2.7	30.0	3.00	158	142	63	125	1
4	100	D/7343-31	T494D107(1)004A(2)	4.0	8.0	0.20	866	779	346	125	1
4	100	C/6032-28	T494C107(1)004A(2)	4.0	8.0	0.20	742	668	297	125	1
4	100	U/6032-15	T494U107(1)004A(2)	4.0	10.0	1.00	300	270	120	125	1
4	100	B/3528-21	T494B107(M)004A(2)	4.0	8.0	0.65	362	326	145	125	1
4	100	A/3216-18	T494A107(M)004A(2)	4.0	30.0	3.00	158	142	63	125	1
4	100	T/3528-12	T494T107(M)004A(2)	4.0	30.0	4.50	125	113	50	125	1
4	150	D/7343-31	T494D157(1)004A(2)	6.0	8.0	0.15	1,000	900	400	125	1
4	150	V/7343-20	T494V157(1)004A(2)	6.0	8.0	0.20	791	712	316	125	1
4	150	C/6032-28	T494C157(1)004A(2)	6.0	8.0	0.30	606	545	242	125	1
4	150	B/3528-21	T494B157(1)004A(2)	6.0	12.0	1.00	292	263	117	125	1
4	220	V/7343-20	T494V227(1)004A(2)	8.8	8.0	0.30	645	581	258	125	1
VDC at 85°C	µF	KEMET/EIA	(See below for part options)	µA at 20°C Max/5 Min	% at 20°C 120 Hz Max	Ω at 20°C 100 kHz Max	mA at 25°C 100 kHz	mA at 85°C 100 kHz	mA at 125°C 100 kHz	°C	Reflow Temp ≤ 260°C
Rated Voltage	Rated Cap	Case Code/ Case Size	KEMET Part Number	DC Leakage	DF	ESR	Maximum Allowable Ripple Current (rms)			Maximum Operating Temp	MSL

(1) To complete KEMET part number, insert M for ±20% or K for ±10%. Designates capacitance tolerance.
(2) To complete KEMET part number, insert T = 100% Matte Tin (Sn)-Plated, G = Gold-plated, H = Standard Solder coated (SnPb 5% Pb minimum), N = Non-Magnetic 100% Tin (Sn) or M = Non-Magnetic (SnPb). Designates termination finish.
Refer to Ordering Information for additional detail.
Higher voltage ratings and tighter tolerance product including ESR may be substituted within the same size at KEMET's option. Voltage substitution will be marked with the higher voltage rating. Substitutions can include better than series.

Table 1 – Ratings & Part Number Reference cont.

Rated Voltage	Rated Cap	Case Code/ Case Size	KEMET Part Number	DC Leakage	DF	ESR	Maximum Allowable Ripple Current (rms)			Maximum Operating Temp	MSL
VDC at 85°C	µF	KEMET/EIA	(See below for part options)	µA at 20°C Max/5 Min	% at 20°C 120 Hz Max	Ω at 20°C 100 kHz Max	mA at 25°C 100 kHz	mA at 85°C 100 kHz	mA at 125°C 100 kHz	°C	Reflow Temp ≤ 260°C
4	220	B/3528-21	T494B227(1)004A(2)	8.8	8.0	0.40	461	415	184	125	1
4	330	D/7343-31	T494D337(1)004A(2)	13.2	8.0	0.15	1,000	900	400	125	1
4	330	C/6032-28	T494C337(1)004A(2)	13.2	10.0	0.09	1,106	995	442	125	1
4	330	V/7343-20	T494V337(1)004A(2)	13.2	12.0	0.30	645	581	258	125	1
4	470	X/7343-43	T494X477(1)004A(2)	18.8	8.0	0.15	1,049	944	420	125	1
4	470	D/7343-31	T494D477(1)004A(2)	18.8	8.0	0.15	1,000	900	400	125	1
4	680	X/7343-43	T494X687(M)004A(2)	27.2	12.0	0.10	1,285	1157	514	125	1
4	680	D/7343-31	T494D687(M)004A(2)	27.2	12.0	0.15	1,000	900	400	125	1
4	1000	X/7343-43	T494X108(1)004A(2)	40.0	12.0	0.10	1,285	1157	514	125	1
4	1000	E/7360-38	T494E108(M)004A(2)	40.0	15.0	0.08	1,581	1423	632	125	1
6.3	2.2	A/3216-18	T494A225(1)006A(2)	0.5	6.0	6.0	112	101	45	125	1
6.3	3.3	A/3216-18	T494A335(1)006A(2)	0.5	6.0	6.0	112	101	45	125	1
6.3	4.7	A/3216-18	T494A475(1)006A(2)	0.5	6.0	3.5	146	131	58	125	1
6.3	4.7	S/3216-12	T494S475(1)006A(2)	0.5	6.0	8.0	87	78	35	125	1
6.3	6.8	B/3528-21	T494B685(1)006A(2)	0.5	6.0	1.2	266	239	106	125	1
6.3	6.8	A/3216-18	T494A685(1)006A(2)	0.5	6.0	2.0	194	175	78	125	1
6.3	6.8	S/3216-12	T494S685(1)006A(2)	0.5	6.0	9.0	82	74	33	125	1
6.3	10	B/3528-21	T494B106(1)006A(2)	0.6	6.0	1.0	292	263	117	125	1
6.3	10	A/3216-18	T494A106(1)006A(2)	0.6	6.0	2.0	194	175	78	125	1
6.3	10	T/3528-12	T494T106(1)006A(2)	0.6	6.0	1.2	242	218	97	125	1
6.3	10	S/3216-12	T494S106(M)006A(2)	0.6	10.0	9.0	82	74	33	125	1
6.3	15	C/6032-28	T494C156(1)006A(2)	0.9	6.0	0.6	428	385	171	125	1
6.3	15	B/3528-21	T494B156(1)006A(2)	0.9	6.0	0.7	348	313	139	125	1
6.3	15	A/3216-18	T494A156(1)006A(2)	0.9	6.0	2.0	194	175	78	125	1
6.3	15	T/3528-12	T494T156(1)006A(2)	0.9	6.0	2.5	167	150	67	125	1
6.3	15	S/3216-12	T494S156(M)006A(2)	0.9	10.0	10.0	77	69	31	125	1
6.3	22	C/6032-28	T494C226(1)006A(2)	1.4	6.0	0.5	469	422	188	125	1
6.3	22	U/6032-15	T494U226(1)006A(2)	1.4	6.0	0.8	335	302	134	125	1
6.3	22	B/3528-21	T494B226(1)006A(2)	1.4	6.0	0.6	376	338	150	125	1
6.3	22	A/3216-18	T494A226(1)006A(2)	1.4	6.0	3.0	158	142	63	125	1
6.3	22	T/3528-12	T494T226(M)006A(2)	1.4	8.0	3.5	141	127	56	125	1
6.3	33	C/6032-28	T494C336(1)006A(2)	2.1	6.0	0.3	606	545	242	125	1
6.3	33	U/6032-15	T494U336(1)006A(2)	2.1	6.0	0.6	387	348	155	125	1
6.3	33	B/3528-21	T494B336(1)006A(2)	2.1	6.0	0.6	376	338	150	125	1
6.3	33	A/3216-18	T494A336(1)006A(2)	2.1	12.0	2.0	194	175	78	125	1
6.3	33	T/3528-12	T494T336(M)006A(2)	2.1	12.0	4.0	132	119	53	125	1
6.3	47	D/7343-31	T494D476(1)006A(2)	3.0	6.0	0.22	826	743	330	125	1
6.3	47	C/6032-28	T494C476(1)006A(2)	3.0	6.0	0.25	663	597	265	125	1
6.3	47	U/6032-15	T494U476(1)006A(2)	3.0	6.0	0.60	387	348	155	125	1
6.3	47	B/3528-21	T494B476(1)006A(2)	3.0	6.0	0.50	412	371	165	125	1
6.3	47	A/3216-18	T494A476(M)006A(2)	3.0	12.0	2.50	173	156	69	125	1
6.3	47	T/3528-12	T494T476(1)006A(2)	3.0	24.0	4.00	132	119	53	125	1
6.3	68	D/7343-31	T494D686(1)006A(2)	4.3	6.0	0.20	866	779	346	125	1
6.3	68	C/6032-28	T494C686(1)006A(2)	4.3	6.0	0.20	742	668	297	125	1
6.3	68	U/6032-15	T494U686(1)006A(2)	4.3	10.0	1.00	300	270	120	125	1
VDC at 85°C	µF	KEMET/EIA	(See below for part options)	µA at 20°C Max/5 Min	% at 20°C 120 Hz Max	Ω at 20°C 100 kHz Max	mA at 25°C 100 kHz	mA at 85°C 100 kHz	mA at 125°C 100 kHz	°C	Reflow Temp ≤ 260°C
Rated Voltage	Rated Cap	Case Code/ Case Size	KEMET Part Number	DC Leakage	DF	ESR	Maximum Allowable Ripple Current (rms)			Maximum Operating Temp	MSL

(1) To complete KEMET part number, insert M for ±20% or K for ±10%. Designates capacitance tolerance.
(2) To complete KEMET part number, insert T = 100% Matte Tin (Sn)-Plated, G = Gold-plated, H = Standard Solder coated (SnPb 5% Pb minimum), N = Non-Magnetic 100% Tin (Sn) or M = Non-Magnetic (SnPb). Designates termination finish.
Refer to Ordering Information for additional detail.
Higher voltage ratings and tighter tolerance product including ESR may be substituted within the same size at KEMET's option. Voltage substitution will be marked with the higher voltage rating. Substitutions can include better than series.

Table 1 – Ratings & Part Number Reference cont.

Rated Voltage	Rated Cap	Case Code/ Case Size	KEMET Part Number	DC Leakage	DF	ESR	Maximum Allowable Ripple Current (rms)			Maximum Operating Temp	MSL
VDC at 85°C	µF	KEMET/EIA	(See below for part options)	µA at 20°C Max/5 Min	% at 20°C 120 Hz Max	Ω at 20°C 100 kHz Max	mA at 25°C 100 kHz	mA at 85°C 100 kHz	mA at 125°C 100 kHz	°C	Reflow Temp ≤ 260°C
6.3	68	B/3528-21	T494B686(M)006A(2)	4.3	8.0	0.65	362	326	145	125	1
6.3	68	A/3216-18	T494A686(1)006A(2)	4.3	30.0	3.00	158	142	63	125	1
6.3	100	D/7343-31	T494D107(1)006A(2)	6.3	8.0	0.15	1,000	900	400	125	1
6.3	100	V/7343-20	T494V107(1)006A(2)	6.3	8.0	0.20	791	712	316	125	1
6.3	100	C/6032-28	T494C107(1)006A(2)	6.3	8.0	0.30	606	545	242	125	1
6.3	100	U/6032-15	T494U107(M)006A(2)	6.3	10.0	1.20	274	247	110	125	1
6.3	100	B/3528-21	T494B107(1)006A(2)	6.3	15.0	1.50	238	214	95	125	1
6.3	150	B/3528-21	T494B157(1)006A(2)	9.5	15.0	2.25	194	175	78	125	1
6.3	150	D/7343-31	T494D157(1)006A(2)	9.5	8.0	0.15	1,000	900	400	125	1
6.3	150	C/6032-28	T494C157(M)006A(2)	9.5	8.0	0.30	606	545	242	125	1
6.3	150	V/7343-20	T494V157(1)006A(2)	9.5	8.0	0.30	645	581	258	125	1
6.3	220	X/7343-43	T494X227(1)006A(2)	13.9	8.0	0.15	1,049	944	420	125	1
6.3	220	D/7343-31	T494D227(1)006A(2)	13.9	8.0	0.15	1,000	900	400	125	1
6.3	220	C/6032-28	T494C227(M)006A(2)	13.9	10.0	0.30	606	545	242	125	1
6.3	220	V/7343-20	T494V227(M)006A(2)	13.9	12.0	0.30	645	581	258	125	1
6.3	330	X/7343-43	T494X337(1)006A(2)	20.8	8.0	0.15	1,049	944	420	125	1
6.3	330	D/7343-31	T494D337(1)006A(2)	20.8	8.0	0.15	1,000	900	400	125	1
6.3	330	E/7360-38	T494E337(1)006A(2)	20.8	8.0	0.25	894	805	358	125	1
6.3	470	X/7343-43	T494X477(1)006A(2)	29.6	10.0	0.10	1,285	1157	514	125	1
6.3	470	D/7343-31	T494D477(M)006A(2)	29.6	12.0	0.15	1,000	900	400	125	1
6.3	470	E/7360-38	T494E477(1)006A(2)	29.6	10.0	0.20	1,000	900	400	125	1
6.3	680	E/7360-38	T494E687(M)006A(2)	42.8	12.0	0.10	1,414	1273	566	125	1
6.3	680	X/7343-43	T494X687(1)006A(2)	42.8	12.0	0.10	1,285	1157	514	125	1
10	1.5	A/3216-18	T494A155(1)010A(2)	0.5	6.0	6.0	112	101	45	125	1
10	2.2	B/3528-21	T494B225(1)010A(2)	0.5	6.0	1.5	238	214	95	125	1
10	2.2	A/3216-18	T494A225(1)010A(2)	0.5	6.0	6.0	112	101	45	125	1
10	3.3	A/3216-18	T494A335(1)010A(2)	0.5	6.0	4.0	137	123	55	125	1
10	3.3	S/3216-12	T494S335(1)010A(2)	0.5	6.0	9.0	82	74	33	125	1
10	4.7	B/3528-21	T494B475(1)010A(2)	0.5	6.0	1.5	238	214	95	125	1
10	4.7	A/3216-18	T494A475(1)010A(2)	0.5	6.0	3.0	158	142	63	125	1
10	4.7	S/3216-12	T494S475(1)010A(2)	0.5	6.0	9.0	82	74	33	125	1
10	6.8	B/3528-21	T494B685(1)010A(2)	0.7	6.0	1.2	266	239	106	125	1
10	6.8	A/3216-18	T494A685(1)010A(2)	0.7	6.0	3.0	158	142	63	125	1
10	6.8	T/3528-12	T494T685(1)010A(2)	0.7	6.0	2.0	187	168	75	125	1
10	6.8	S/3216-12	T494S685(M)010A(2)	0.7	10.0	9.0	82	74	33	125	1
10	10	C/6032-28	T494C106(1)010A(2)	1.0	6.0	0.6	428	385	171	125	1
10	10	B/3528-21	T494B106(1)010A(2)	1.0	6.0	0.8	326	293	130	125	1
10	10	A/3216-18	T494A106(1)010A(2)	1.0	6.0	1.8	204	184	82	125	1
10	10	T/3528-12	T494T106(1)010A(2)	1.0	6.0	3.5	141	127	56	125	1
10	10	S/3216-12	T494S106(M)010A(2)	1.0	10.0	12.0	71	64	28	125	1
10	15	C/6032-28	T494C156(1)010A(2)	1.5	6.0	0.5	469	422	188	125	1
10	15	U/6032-15	T494U156(1)010A(2)	1.5	6.0	0.8	335	302	134	125	1
10	15	B/3528-21	T494B156(1)010A(2)	1.5	6.0	0.7	348	313	139	125	1
10	15	A/3216-18	T494A156(1)010A(2)	1.5	6.0	3.2	153	138	61	125	1
10	15	T/3528-12	T494T156(M)010A(2)	1.5	8.0	3.5	141	127	56	125	1
VDC at 85°C	µF	KEMET/EIA	(See below for part options)	µA at 20°C Max/5 Min	% at 20°C 120 Hz Max	Ω at 20°C 100 kHz Max	mA at 25°C 100 kHz	mA at 85°C 100 kHz	mA at 125°C 100 kHz	°C	Reflow Temp ≤ 260°C
Rated Voltage	Rated Cap	Case Code/ Case Size	KEMET Part Number	DC Leakage	DF	ESR	Maximum Allowable Ripple Current (rms)			Maximum Operating Temp	MSL

(1) To complete KEMET part number, insert M for ±20% or K for ±10%. Designates capacitance tolerance.
(2) To complete KEMET part number, insert T = 100% Matte Tin (Sn)-Plated, G = Gold-plated, H = Standard Solder coated (SnPb 5% Pb minimum), N = Non-Magnetic 100% Tin (Sn) or M = Non-Magnetic (SnPb). Designates termination finish.
Refer to Ordering Information for additional detail.
Higher voltage ratings and tighter tolerance product including ESR may be substituted within the same size at KEMET's option. Voltage substitution will be marked with the higher voltage rating. Substitutions can include better than series.

Table 1 – Ratings & Part Number Reference cont.

Rated Voltage	Rated Cap	Case Code/ Case Size	KEMET Part Number	DC Leakage	DF	ESR	Maximum Allowable Ripple Current (rms)			Maximum Operating Temp	MSL
VDC at 85°C	µF	KEMET/EIA	(See below for part options)	µA at 20°C Max/5 Min	% at 20°C 120 Hz Max	Ω at 20°C 100 kHz Max	mA at 25°C 100 kHz	mA at 85°C 100 kHz	mA at 125°C 100 kHz	°C	Reflow Temp ≤ 260°C
10	22	C/6032-28	T494C226(1)010A(2)	2.2	6.0	0.4	524	472	210	125	1
10	22	U/6032-15	T494U226(1)010A(2)	2.2	6.0	0.8	335	302	134	125	1
10	22	B/3528-21	T494B226(1)010A(2)	2.2	6.0	0.7	348	313	139	125	1
10	22	A/3216-18	T494A226(M)010A(2)	2.2	10.0	4.5	129	116	52	125	1
10	22	T/3528-12	T494T226(M)010A(2)	2.2	12.0	6.0	108	97	43	125	1
10	33	D/7343-31	T494D336(1)010A(2)	3.3	6.0	0.25	775	698	310	125	1
10	33	V/7343-20	T494V336(1)010A(2)	3.3	6.0	0.30	645	581	258	125	1
10	33	C/6032-28	T494C336(1)010A(2)	3.3	6.0	0.30	606	545	242	125	1
10	33	U/6032-15	T494U336(1)010A(2)	3.3	6.0	0.60	387	348	155	125	1
10	33	T/3528-12	T494T336(1)010A(2)	3.3	24.0	3.75	137	123	55	125	1
10	33	B/3528-21	T494B336(1)010A(2)	3.3	6.0	1.40	246	221	98	125	1
10	33	A/3216-18	T494A336(1)010A(2)	3.3	15.0	4.00	137	123	55	125	1
10	47	D/7343-31	T494D476(1)010A(2)	4.7	6.0	0.22	826	743	330	125	1
10	47	V/7343-20	T494V476(1)010A(2)	4.7	6.0	0.30	645	581	258	125	1
10	47	C/6032-28	T494C476(1)010A(2)	4.7	6.0	0.30	606	545	242	125	1
10	47	U/6032-15	T494U476(1)010A(2)	4.7	10.0	1.20	274	247	110	125	1
10	47	B/3528-21	T494B476(1)010A(2)	4.7	8.0	0.65	362	326	145	125	1
10	68	D/7343-31	T494D686(1)010A(2)	6.8	6.0	0.20	866	779	346	125	1
10	68	C/6032-28	T494C686(1)010A(2)	6.8	6.0	0.30	606	545	242	125	1
10	68	V/7343-20	T494V686(1)010A(2)	6.8	6.0	0.30	645	581	258	125	1
10	68	U/6032-15	T494U686(M)010A(2)	6.8	10.0	1.20	274	247	110	125	1
10	68	B/3528-21	T494B686(M)010A(2)	6.8	10.0	1.50	238	214	95	125	1
10	100	B/3528-21	T494B107(1)010A(2)	10.0	15.0	1.0	292	263	117	125	1
10	100	D/7343-31	T494D107(1)010A(2)	10.0	8.0	0.15	1,000	900	400	125	1
10	100	C/6032-28	T494C107(1)010A(2)	10.0	8.0	0.20	742	668	297	125	1
10	100	V/7343-20	T494V107(1)010A(2)	10.0	8.0	0.40	559	503	224	125	1
10	150	X/7343-43	T494X157(1)010A(2)	15.0	8.0	0.15	1,049	944	420	125	1
10	150	D/7343-31	T494D157(1)010A(2)	15.0	8.0	0.15	1,000	900	400	125	1
10	150	C/6032-28	T494C157(1)010A(2)	15.0	10.0	0.70	396	356	158	125	1
10	150	V/7343-20	T494V157(M)010A(2)	15.0	8.0	0.30	645	581	258	125	1
10	220	X/7343-43	T494X227(1)010A(2)	22.0	8.0	0.15	1,049	944	420	125	1
10	220	D/7343-31	T494D227(1)010A(2)	22.0	8.0	0.15	1,000	900	400	125	1
10	330	X/7343-43	T494X337(1)010A(2)	33.0	10.0	0.10	1,285	1157	514	125	1
10	330	D/7343-31	T494D337(1)010A(2)	33.0	10.0	0.15	1,000	900	400	125	1
10	330	E/7360-38	T494E337(1)010A(2)	33.0	10.0	0.25	894	805	358	125	1
10	470	X/7343-43	T494X477(1)010A(2)	47.0	10.0	0.10	1,285	1157	514	125	1
10	470	E/7360-38	T494E477(M)010A(2)	47.0	12.0	0.10	1,414	1273	566	125	1
16	1	A/3216-18	T494A105(1)016A(2)	0.5	4.0	6.0	112	101	45	125	1
16	1.5	A/3216-18	T494A155(1)016A(2)	0.5	6.0	6.0	112	101	45	125	1
16	2.2	A/3216-18	T494A225(1)016A(2)	0.5	6.0	4.0	137	123	55	125	1
16	2.2	S/3216-12	T494S225(1)016A(2)	0.5	6.0	10.0	77	69	31	125	1
16	3.3	B/3528-21	T494B335(1)016A(2)	0.5	6.0	2.0	206	185	82	125	1
16	3.3	A/3216-18	T494A335(1)016A(2)	0.5	6.0	4.0	137	123	55	125	1
16	4.7	B/3528-21	T494B475(1)016A(2)	0.8	6.0	1.5	238	214	95	125	1
16	4.7	A/3216-18	T494A475(1)016A(2)	0.8	6.0	3.0	158	142	63	125	1
VDC at 85°C	µF	KEMET/EIA	(See below for part options)	µA at 20°C Max/5 Min	% at 20°C 120 Hz Max	Ω at 20°C 100 kHz Max	mA at 25°C 100 kHz	mA at 85°C 100 kHz	mA at 125°C 100 kHz	°C	Reflow Temp ≤ 260°C
Rated Voltage	Rated Cap	Case Code/ Case Size	KEMET Part Number	DC Leakage	DF	ESR	Maximum Allowable Ripple Current (rms)			Maximum Operating Temp	MSL

(1) To complete KEMET part number, insert M for ±20% or K for ±10%. Designates capacitance tolerance.
(2) To complete KEMET part number, insert T = 100% Matte Tin (Sn)-Plated, G = Gold-plated, H = Standard Solder coated (SnPb 5% Pb minimum), N = Non-Magnetic 100% Tin (Sn) or M = Non-Magnetic (SnPb). Designates termination finish.
Refer to Ordering Information for additional detail.
Higher voltage ratings and tighter tolerance product including ESR may be substituted within the same size at KEMET's option. Voltage substitution will be marked with the higher voltage rating. Substitutions can include better than series.

Table 1 – Ratings & Part Number Reference cont.

Rated Voltage	Rated Cap	Case Code/ Case Size	KEMET Part Number	DC Leakage	DF	ESR	Maximum Allowable Ripple Current (rms)			Maximum Operating Temp	MSL
VDC at 85°C	µF	KEMET/EIA	(See below for part options)	µA at 20°C Max/5 Min	% at 20°C 120 Hz Max	Ω at 20°C 100 kHz Max	mA at 25°C 100 kHz	mA at 85°C 100 kHz	mA at 125°C 100 kHz	°C	Reflow Temp ≤ 260°C
16	4.7	T/3528-12	T494T475(1)016A(2)	0.8	6.0	3.0	153	138	61	125	1
16	6.8	C/6032-28	T494C685(1)016A(2)	1.1	6.0	0.8	371	334	148	125	1
16	6.8	B/3528-21	T494B685(1)016A(2)	1.1	6.0	1.2	266	239	106	125	1
16	6.8	A/3216-18	T494A685(1)016A(2)	1.1	6.0	3.0	158	142	63	125	1
16	10	C/6032-28	T494C106(1)016A(2)	1.6	6.0	0.6	428	385	171	125	1
16	10	U/6032-15	T494U106(1)016A(2)	1.6	6.0	1.0	300	270	120	125	1
16	10	B/3528-21	T494B106(1)016A(2)	1.6	6.0	0.8	326	293	130	125	1
16	10	A/3216-18	T494A106(1)016A(2)	1.6	8.0	3.0	158	142	63	125	1
16	10	T/3528-12	T494T106(1)016A(2)	1.6	8.0	6.0	108	97	43	125	1
16	15	C/6032-28	T494C156(1)016A(2)	2.4	6.0	0.4	524	472	210	125	1
16	15	U/6032-15	T494U156(1)016A(2)	2.4	6.0	0.8	335	302	134	125	1
16	15	B/3528-21	T494B156(1)016A(2)	2.4	6.0	0.8	326	293	130	125	1
16	22	D/7343-31	T494D226(1)016A(2)	3.5	6.0	0.25	775	698	310	125	1
16	22	C/6032-28	T494C226(1)016A(2)	3.5	6.0	0.35	561	505	224	125	1
16	22	U/6032-15	T494U226(1)016A(2)	3.5	10.0	1.80	224	202	90	125	1
16	22	B/3528-21	T494B226(1)016A(2)	3.5	6.0	1.00	292	263	117	125	1
16	33	D/7343-31	T494D336(1)016A(2)	5.3	6.0	0.25	775	698	310	125	1
16	33	C/6032-28	T494C336(1)016A(2)	5.3	6.0	0.30	606	545	242	125	1
16	33	U/6032-15	T494U336(1)016A(2)	5.3	12.0	2.20	202	182	81	125	1
16	33	B/3528-21	T494B336(1)016A(2)	5.3	8.0	1.20	266	239	106	125	1
16	47	D/7343-31	T494D476(1)016A(2)	7.5	6.0	0.2	866	779	346	125	1
16	47	V/7343-20	T494V476(1)016A(2)	7.5	6.0	0.3	645	581	258	125	1
16	47	C/6032-28	T494C476(1)016A(2)	7.5	6.0	0.5	469	422	188	125	1
16	68	D/7343-31	T494D686(1)016A(2)	10.9	6.0	0.15	1,000	900	400	125	1
16	68	V/7343-20	T494V686(1)016A(2)	10.9	6.0	0.5	500	450	200	125	1
16	68	C/6032-28	T494C686(1)016A(2)	10.9	12.0	1.0	332	299	133	125	1
16	100	X/7343-43	T494X107(1)016A(2)	16.0	8.0	0.15	1,049	944	420	125	1
16	100	D/7343-31	T494D107(1)016A(2)	16.0	8.0	0.15	1,000	900	400	125	1
16	100	V/7343-20	T494V107(1)016A(2)	16.0	12.0	0.5	500	450	200	125	1
16	100	C/6032-28	T494C107(1)016A(2)	16.0	10.0	0.75	383	345	153	125	1
16	150	X/7343-43	T494X157(1)016A(2)	24.0	8.0	0.15	1,049	944	420	125	1
16	150	D/7343-31	T494D157(1)016A(2)	24.0	12.0	0.4	612	551	245	125	1
16	220	D/7343-31	T494D227(1)016A(2)	35.2	15.0	0.68	470	423	188	125	1
16	220	X/7343-43	T494X227(1)016A(2)	35.2	10.0	0.4	642	578	257	125	1
16	220	E/7360-38	T494E227(1)016A(2)	35.2	7.2	0.5	632	569	253	125	1
20	0.68	A/3216-18	T494A684(1)020A(2)	0.5	4.0	8.0	97	87	39	125	1
20	1	A/3216-18	T494A105(1)020A(2)	0.5	4.0	5.5	117	105	47	125	1
20	1	S/3216-12	T494S105(1)020A(2)	0.5	6.0	10.0	77	69	31	125	1
20	1.5	A/3216-18	T494A155(1)020A(2)	0.5	6.0	4.5	129	116	52	125	1
20	1.5	S/3216-12	T494S155(1)020A(2)	0.5	6.0	9.0	82	74	33	125	1
20	2.2	B/3528-21	T494B225(1)020A(2)	0.5	6.0	1.5	238	214	95	125	1
20	2.2	A/3216-18	T494A225(1)020A(2)	0.5	6.0	4.0	137	123	55	125	1
20	3.3	B/3528-21	T494B335(1)020A(2)	0.7	6.0	1.3	256	230	102	125	1
20	3.3	A/3216-18	T494A335(1)020A(2)	0.7	6.0	4.0	137	123	55	125	1
20	3.3	T/3528-12	T494T335(1)020A(2)	0.7	6.0	4.0	132	119	53	125	1
VDC at 85°C	µF	KEMET/EIA	(See below for part options)	µA at 20°C Max/5 Min	% at 20°C 120 Hz Max	Ω at 20°C 100 kHz Max	mA at 25°C 100 kHz	mA at 85°C 100 kHz	mA at 125°C 100 kHz	°C	Reflow Temp ≤ 260°C
Rated Voltage	Rated Cap	Case Code/ Case Size	KEMET Part Number	DC Leakage	DF	ESR	Maximum Allowable Ripple Current (rms)			Maximum Operating Temp	MSL

(1) To complete KEMET part number, insert M for ±20% or K for ±10%. Designates capacitance tolerance.
(2) To complete KEMET part number, insert T = 100% Matte Tin (Sn)-Plated, G = Gold-plated, H = Standard Solder coated (SnPb 5% Pb minimum), N = Non-Magnetic 100% Tin (Sn) or M = Non-Magnetic (SnPb). Designates termination finish.
Refer to Ordering Information for additional detail.
Higher voltage ratings and tighter tolerance product including ESR may be substituted within the same size at KEMET's option. Voltage substitution will be marked with the higher voltage rating. Substitutions can include better than series.

Table 1 – Ratings & Part Number Reference cont.

Rated Voltage	Rated Cap	Case Code/ Case Size	KEMET Part Number	DC Leakage	DF	ESR	Maximum Allowable Ripple Current (rms)			Maximum Operating Temp	MSL
VDC at 85°C	µF	KEMET/EIA	(See below for part options)	µA at 20°C Max/5 Min	% at 20°C 120 Hz Max	Ω at 20°C 100 kHz Max	mA at 25°C 100 kHz	mA at 85°C 100 kHz	mA at 125°C 100 kHz	°C	Reflow Temp ≤ 260°C
20	4.7	C/6032-28	T494C475(1)020A(2)	0.9	6.0	0.6	428	385	171	125	1
20	4.7	B/3528-21	T494B475(1)020A(2)	0.9	6.0	1.0	292	263	117	125	1
20	4.7	A/3216-18	T494A475(1)020A(2)	0.9	6.0	3.0	158	142	63	125	1
20	6.8	C/6032-28	T494C685(1)020A(2)	1.4	6.0	0.6	428	385	171	125	1
20	6.8	U/6032-15	T494U685(1)020A(2)	1.4	6.0	1.4	254	229	102	125	1
20	6.8	B/3528-21	T494B685(1)020A(2)	1.4	6.0	1.0	292	263	117	125	1
20	6.8	A/3216-18	T494A685(M)020A(2)	1.4	8.0	3.0	158	142	63	125	1
20	10	C/6032-28	T494C106(1)020A(2)	2.0	6.0	0.5	469	422	188	125	1
20	10	U/6032-15	T494U106(1)020A(2)	2.0	6.0	0.8	335	302	134	125	1
20	10	B/3528-21	T494B106(1)020A(2)	2.0	6.0	1.0	292	263	117	125	1
20	10	A/3216-18	T494A106(1)020A(2)	2.0	10.0	3.0	158	142	63	125	1
20	15	D/7343-31	T494D156(1)020A(2)	3.0	6.0	0.35	655	590	262	125	1
20	15	C/6032-28	T494C156(1)020A(2)	3.0	6.0	0.40	524	472	210	125	1
20	22	D/7343-31	T494D226(1)020A(2)	4.4	6.0	0.3	707	636	283	125	1
20	22	V/7343-20	T494V226(1)020A(2)	4.4	6.0	0.4	559	503	224	125	1
20	22	C/6032-28	T494C226(1)020A(2)	4.4	6.0	0.4	524	472	210	125	1
20	22	B/3528-21	T494B226(1)020A(2)	4.4	8.0	3.0	168	151	67	125	1
20	33	D/7343-31	T494D336(1)020A(2)	6.6	6.0	0.25	775	698	310	125	1
20	33	C/6032-28	T494C336(M)020A(2)	6.6	6.0	0.40	524	472	210	125	1
20	33	V/7343-20	T494V336(1)020A(2)	6.6	8.0	0.40	559	503	224	125	1
20	33	B/3528-21	T494B336(M)020A(2)	6.6	10.0	3.00	168	151	67	125	1
20	47	C/6032-28	T494C476(M)020A(2)	9.4	10.0	0.80	371	334	148	125	1
20	47	D/7343-31	T494D476(1)020A(2)	9.4	6.0	0.20	866	779	346	125	1
20	68	X/7343-43	T494X686(1)020A(2)	13.6	6.0	0.20	908	817	363	125	1
20	68	D/7343-31	T494D686(1)020A(2)	13.6	8.0	0.20	866	779	346	125	1
20	68	C/6032-28	T494C686(1)020A(2)	13.6	8.0	0.38	542	488	217	125	1
20	100	D/7343-31	T494D107(1)020A(2)	20.0	6.0	0.68	471	424	188	125	1
20	100	X/7343-43	T494X107(1)020A(2)	20.0	8.0	0.15	1,049	944	420	125	1
20	100	E/7360-38	T494E107(1)020A(2)	20.0	8.0	0.30	816	734	326	125	1
20	150	X/7343-43	T494X157(1)020A(2)	30.0	10.0	0.30	742	668	297	125	1
25	0.33	A/3216-18	T494A334(1)025A(2)	0.5	4.0	10.0	87	78	35	125	1
25	0.47	A/3216-18	T494A474(1)025A(2)	0.5	4.0	9.0	91	82	36	125	1
25	0.68	A/3216-18	T494A684(1)025A(2)	0.5	4.0	6.0	112	101	45	125	1
25	1	B/3528-21	T494B105(1)025A(2)	0.5	4.0	2.0	206	185	82	125	1
25	1	A/3216-18	T494A105(1)025A(2)	0.5	4.0	4.0	137	123	55	125	1
25	1.5	B/3528-21	T494B155(1)025A(2)	0.5	6.0	1.5	238	214	95	125	1
25	1.5	A/3216-18	T494A155(1)025A(2)	0.5	6.0	3.0	158	142	63	125	1
25	2.2	C/6032-28	T494C225(1)025A(2)	0.6	6.0	2.2	224	202	90	125	1
25	2.2	B/3528-21	T494B225(1)025A(2)	0.6	6.0	1.2	266	239	106	125	1
25	2.2	A/3216-18	T494A225(1)025A(2)	0.6	6.0	3.0	158	142	63	125	1
25	3.3	C/6032-28	T494C335(1)025A(2)	0.8	6.0	1.2	303	273	121	125	1
25	3.3	B/3528-21	T494B335(1)025A(2)	0.8	6.0	2.0	206	185	82	125	1
25	3.3	A/3216-18	T494A335(1)025A(2)	0.8	6.0	3.0	158	142	63	125	1
25	4.7	C/6032-28	T494C475(1)025A(2)	1.2	6.0	0.6	428	385	171	125	1
25	4.7	B/3528-21	T494B475(1)025A(2)	1.2	6.0	1.0	292	263	117	125	1
VDC at 85°C	µF	KEMET/EIA	(See below for part options)	µA at 20°C Max/5 Min	% at 20°C 120 Hz Max	Ω at 20°C 100 kHz Max	mA at 25°C 100 kHz	mA at 85°C 100 kHz	mA at 125°C 100 kHz	°C	Reflow Temp ≤ 260°C
Rated Voltage	Rated Cap	Case Code/ Case Size	KEMET Part Number	DC Leakage	DF	ESR	Maximum Allowable Ripple Current (rms)			Maximum Operating Temp	MSL

(1) To complete KEMET part number, insert M for ±20% or K for ±10%. Designates capacitance tolerance.
(2) To complete KEMET part number, insert T = 100% Matte Tin (Sn)-Plated, G = Gold-plated, H = Standard Solder coated (SnPb 5% Pb minimum), N = Non-Magnetic 100% Tin (Sn) or M = Non-Magnetic (SnPb). Designates termination finish.
Refer to Ordering Information for additional detail.
Higher voltage ratings and tighter tolerance product including ESR may be substituted within the same size at KEMET's option. Voltage substitution will be marked with the higher voltage rating. Substitutions can include better than series.

Table 1 – Ratings & Part Number Reference cont.

Rated Voltage	Rated Cap	Case Code/ Case Size	KEMET Part Number	DC Leakage	DF	ESR	Maximum Allowable Ripple Current (rms)			Maximum Operating Temp	MSL
VDC at 85°C	µF	KEMET/EIA	(See below for part options)	µA at 20°C Max/5 Min	% at 20°C 120 Hz Max	Ω at 20°C 100 kHz Max	mA at 25°C 100 kHz	mA at 85°C 100 kHz	mA at 125°C 100 kHz	°C	Reflow Temp ≤ 260°C
25	4.7	A/3216-18	T494A475(M)025A(2)	1.2	8.0	3.0	158	142	63	125	1
25	6.8	C/6032-28	T494C685(1)025A(2)	1.7	6.0	0.6	428	385	171	125	1
25	6.8	B/3528-21	T494B685(1)025A(2)	1.7	8.0	2.0	206	185	82	125	1
25	10	D/7343-31	T494D106(1)025A(2)	2.5	6.0	0.4	612	551	245	125	1
25	10	C/6032-28	T494C106(1)025A(2)	2.5	6.0	0.6	428	385	171	125	1
25	10	B/3528-21	T494B106(1)025A(2)	2.5	8.0	3.0	168	151	67	125	1
25	15	D/7343-31	T494D156(1)025A(2)	3.8	6.0	0.35	655	590	262	125	1
25	15	C/6032-28	T494C156(1)025A(2)	3.8	6.0	0.90	350	315	140	125	1
25	15	B/3528-21	T494B156(1)025A(2)	3.8	8.0	3.00	168	151	67	125	1
25	22	D/7343-31	T494D226(1)025A(2)	5.5	6.0	0.3	707	636	283	125	1
25	22	C/6032-28	T494C226(1)025A(2)	5.5	6.0	1.0	332	299	133	125	1
25	22	V/7343-20	T494V226(1)025A(2)	5.5	6.0	0.5	500	450	200	125	1
25	33	X/7343-43	T494X336(1)025A(2)	8.3	6.0	0.3	742	668	297	125	1
25	33	D/7343-31	T494D336(1)025A(2)	8.3	6.0	0.4	612	551	245	125	1
25	33	C/6032-28	T494C336(1)025A(2)	8.3	10.0	1.0	332	299	133	125	1
25	47	X/7343-43	T494X476(1)025A(2)	11.8	6.0	0.3	742	668	297	125	1
25	47	D/7343-31	T494D476(1)025A(2)	11.8	10.0	0.2	866	779	346	125	1
25	68	X/7343-43	T494X686(M)025A(2)	17.0	8.0	0.3	742	668	297	125	1
25	68	D/7343-31	T494D686(M)025A(2)	17.0	10.0	0.5	548	493	219	125	1
25	100	X/7343-43	T494X107(1)025A(2)	25.0	8.0	0.25	812	731	325	125	1
35	0.1	A/3216-18	T494A104(1)035A(2)	0.5	4.0	10.0	87	78	35	125	1
35	0.15	A/3216-18	T494A154(1)035A(2)	0.5	4.0	6.0	112	101	45	125	1
35	0.22	A/3216-18	T494A224(1)035A(2)	0.5	4.0	6.0	112	101	45	125	1
35	0.33	A/3216-18	T494A334(1)035A(2)	0.5	4.0	6.0	112	101	45	125	1
35	0.47	B/3528-21	T494B474(1)035A(2)	0.5	4.0	2.5	184	166	74	125	1
35	0.47	A/3216-18	T494A474(1)035A(2)	0.5	4.0	4.0	137	123	55	125	1
35	0.68	B/3528-21	T494B684(1)035A(2)	0.5	4.0	2.5	184	166	74	125	1
35	0.68	A/3216-18	T494A684(1)035A(2)	0.5	4.0	6.0	112	101	45	125	1
35	1	B/3528-21	T494B105(1)035A(2)	0.5	4.0	2.0	206	185	82	125	1
35	1	A/3216-18	T494A105(1)035A(2)	0.5	4.0	6.0	112	101	45	125	1
35	1.5	A/3216-18	T494A155(1)035A(2)	0.5	6.0	4.0	137	123	55	125	1
35	1.5	C/6032-28	T494C155(1)035A(2)	0.5	6.0	2.5	210	189	84	125	1
35	1.5	B/3528-21	T494B155(1)035A(2)	0.5	6.0	3.0	168	151	67	125	1
35	2.2	A/3216-18	T494A225(1)035A(2)	0.8	6.0	3.0	158	142	63	125	1
35	2.2	C/6032-28	T494C225(1)035A(2)	0.8	6.0	1.5	271	244	108	125	1
35	2.2	B/3528-21	T494B225(1)035A(2)	0.8	6.0	2.5	184	166	74	125	1
35	3.3	C/6032-28	T494C335(1)035A(2)	1.2	6.0	0.8	371	334	148	125	1
35	3.3	B/3528-21	T494B335(1)035A(2)	1.2	6.0	1.3	256	230	102	125	1
35	4.7	B/3528-21	T494B475(1)035A(2)	1.6	6.0	1.5	238	214	95	125	1
35	4.7	D/7343-31	T494D475(1)035A(2)	1.6	6.0	0.7	463	417	185	125	1
35	4.7	C/6032-28	T494C475(1)035A(2)	1.6	6.0	0.7	396	356	158	125	1
35	6.8	D/7343-31	T494D685(1)035A(2)	2.4	6.0	0.5	548	493	219	125	1
35	6.8	C/6032-28	T494C685(1)035A(2)	2.4	6.0	0.9	350	315	140	125	1
35	10	D/7343-31	T494D106(1)035A(2)	3.5	6.0	0.4	612	551	245	125	1
35	10	C/6032-28	T494C106(1)035A(2)	3.5	6.0	1.2	303	273	121	125	1
VDC at 85°C	µF	KEMET/EIA	(See below for part options)	µA at 20°C Max/5 Min	% at 20°C 120 Hz Max	Ω at 20°C 100 kHz Max	mA at 25°C 100 kHz	mA at 85°C 100 kHz	mA at 125°C 100 kHz	°C	Reflow Temp ≤ 260°C
Rated Voltage	Rated Cap	Case Code/ Case Size	KEMET Part Number	DC Leakage	DF	ESR	Maximum Allowable Ripple Current (rms)			Maximum Operating Temp	MSL

(1) To complete KEMET part number, insert M for ±20% or K for ±10%. Designates capacitance tolerance.
(2) To complete KEMET part number, insert T = 100% Matte Tin (Sn)-Plated, G = Gold-plated, H = Standard Solder coated (SnPb 5% Pb minimum), N = Non-Magnetic 100% Tin (Sn) or M = Non-Magnetic (SnPb). Designates termination finish.
Refer to Ordering Information for additional detail.
Higher voltage ratings and tighter tolerance product including ESR may be substituted within the same size at KEMET's option. Voltage substitution will be marked with the higher voltage rating. Substitutions can include better than series.

Table 1 – Ratings & Part Number Reference cont.

Rated Voltage	Rated Cap	Case Code/ Case Size	KEMET Part Number	DC Leakage	DF	ESR	Maximum Allowable Ripple Current (rms)			Maximum Operating Temp	MSL
VDC at 85°C	µF	KEMET/EIA	(See below for part options)	µA at 20°C Max/5 Min	% at 20°C 120 Hz Max	Ω at 20°C 100 kHz Max	mA at 25°C 100 kHz	mA at 85°C 100 kHz	mA at 125°C 100 kHz	°C	Reflow Temp ≤ 260°C
35	10	V/7343-20	T494V106(1)035A(2)	3.5	6.0	0.8	395	356	158	125	1
35	15	X/7343-43	T494X156(1)035A(2)	5.3	6.0	0.30	742	668	297	125	1
35	15	D/7343-31	T494D156(1)035A(2)	5.3	6.0	0.35	655	590	262	125	1
35	22	X/7343-43	T494X226(1)035A(2)	7.7	6.0	0.3	742	668	297	125	1
35	22	D/7343-31	T494D226(1)035A(2)	7.7	6.0	0.4	612	551	245	125	1
35	33	D/7343-31	T494D336(1)035A(2)	11.6	6.0	0.6	500	450	200	125	1
35	33	X/7343-43	T494X336(1)035A(2)	11.6	6.0	0.6	524	472	210	125	1
35	47	X/7343-43	T494X476(1)035A(2)	16.5	8.0	0.5	574	517	230	125	1
35	47	E/7360-38	T494E476(1)035A(2)	16.5	10.0	0.3	816	734	326	125	1
50	0.1	A/3216-18	T494A104(1)050A(2)	0.5	4.0	10.0	87	78	35	125	1
50	0.15	A/3216-18	T494A154(1)050A(2)	0.5	4.0	10.0	87	78	35	125	1
50	0.22	A/3216-18	T494A224(1)050A(2)	0.5	4.0	12.0	79	71	32	125	1
50	0.22	B/3528-21	T494B224(1)050A(2)	0.5	4.0	10.0	92	83	37	125	1
50	0.33	A/3216-18	T494A334(1)050A(2)	0.5	4.0	9.0	91	82	36	125	1
50	0.33	B/3528-21	T494B334(1)050A(2)	0.5	4.0	2.5	184	166	74	125	1
50	0.47	A/3216-18	T494A474(1)050A(2)	0.5	4.0	6.0	112	101	45	125	1
50	0.47	C/6032-28	T494C474(1)050A(2)	0.5	4.0	1.8	247	222	99	125	1
50	0.47	B/3528-21	T494B474(1)050A(2)	0.5	4.0	2.0	206	185	82	125	1
50	0.68	A/3216-18	T494A684(1)050A(2)	0.5	4.0	5.0	122	110	49	125	1
50	0.68	C/6032-28	T494C684(1)050A(2)	0.5	4.0	1.6	262	236	105	125	1
50	0.68	B/3528-21	T494B684(1)050A(2)	0.5	4.0	3.0	168	151	67	125	1
50	1	A/3216-18	T494A105(1)050A(2)	0.5	4.0	5.0	122	110	49	125	1
50	1	C/6032-28	T494C105(1)050A(2)	0.5	4.0	1.6	262	236	105	125	1
50	1	B/3528-21	T494B105(1)050A(2)	0.5	6.0	4.0	146	131	58	125	1
50	1	V/7343-20	T494V105(M)050A(2)	0.5	4.0	4.0	177	159	71	125	1
50	1.5	D/7343-31	T494D155(1)050A(2)	0.8	6.0	1.0	387	348	155	125	1
50	1.5	C/6032-28	T494C155(1)050A(2)	0.8	6.0	1.5	271	244	108	125	1
50	2.2	D/7343-31	T494D225(1)050A(2)	1.1	6.0	0.8	433	390	173	125	1
50	2.2	C/6032-28	T494C225(1)050A(2)	1.1	6.0	1.5	271	244	108	125	1
50	3.3	D/7343-31	T494D335(1)050A(2)	1.7	6.0	0.8	433	390	173	125	1
50	4.7	D/7343-31	T494D475(1)050A(2)	2.4	6.0	0.6	500	450	200	125	1
50	6.8	X/7343-43	T494X685(1)050A(2)	3.4	6.0	0.5	574	517	230	125	1
50	6.8	D/7343-31	T494D685(1)050A(2)	3.4	6.0	0.7	463	417	185	125	1
50	10	X/7343-43	T494X106(1)050A(2)	5.0	6.0	0.4	642	578	257	125	1
50	10	D/7343-31	T494D106(1)050A(2)	5.0	6.0	0.7	463	417	185	125	1
50	15	X/7343-43	T494X156(1)050A(2)	7.5	6.0	0.4	642	578	257	125	1
50	22	X/7343-43	T494X226(1)050A(2)	11.0	10.0	0.5	574	517	230	125	1
VDC at 85°C	µF	KEMET/EIA	(See below for part options)	µA at 20°C Max/5 Min	% at 20°C 120 Hz Max	Ω at 20°C 100 kHz Max	mA at 25°C 100 kHz	mA at 85°C 100 kHz	mA at 125°C 100 kHz	°C	Reflow Temp ≤ 260°C
Rated Voltage	Rated Cap	Case Code/ Case Size	KEMET Part Number	DC Leakage	DF	ESR	Maximum Allowable Ripple Current (rms)			Maximum Operating Temp	MSL

(1) To complete KEMET part number, insert M for ±20% or K for ±10%. Designates capacitance tolerance.
(2) To complete KEMET part number, insert T = 100% Matte Tin (Sn)-Plated, G = Gold-plated, H = Standard Solder coated (SnPb 5% Pb minimum), N = Non-Magnetic 100% Tin (Sn) or M = Non-Magnetic (SnPb). Designates termination finish.
Refer to Ordering Information for additional detail.
Higher voltage ratings and tighter tolerance product including ESR may be substituted within the same size at KEMET's option. Voltage substitution will be marked with the higher voltage rating. Substitutions can include better than series.

Recommended Voltage Derating Guidelines

	−55°C to 85°C	85°C to 125°C
% Change in working DC voltage with temperature	V_R	67% of V_R
Recommended maximum application voltage	50% of V_R	33% of V_R

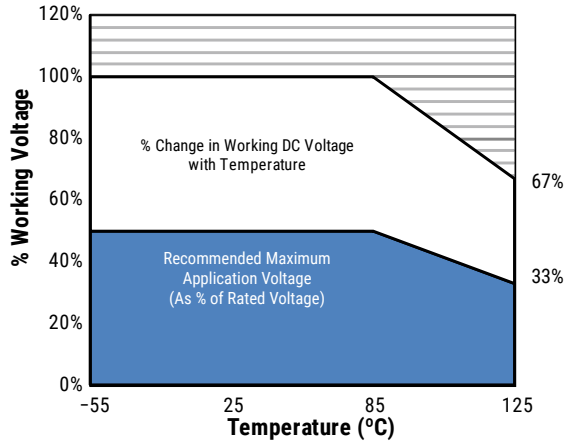

Ripple Current/Ripple Voltage

Permissible AC ripple voltage and current are related to equivalent series resistance (ESR) and the power dissipation capabilities of the device. Permissible AC ripple voltage which may be applied is limited by two criteria:

1. The positive peak AC voltage plus the DC bias voltage, if any, must not exceed the DC voltage rating of the capacitor.
2. The negative peak AC voltage in combination with bias voltage, if any, must not exceed the allowable limits specified for reverse voltage. See the Reverse Voltage section for allowable limits.

The maximum power dissipation by case size can be determined using the table at right. The maximum power dissipation rating stated in the table must be reduced with increasing environmental operating temperatures. Refer to the table below for temperature compensation requirements.

Temperature Compensation Multipliers for Maximum Ripple Current		
T ≤ 25°C	T ≤ 85°C	T ≤ 125°C
1.00	0.90	0.40

T = Environmental Temperature

The maximum power dissipation rating must be reduced with increasing environmental operating temperatures. Refer to the Temperature Compensation Multiplier table for details.

KEMET Case Code	EIA Case Code	Maximum Power Dissipation (P max) mWatts at 25°C w/+20°C Rise
A	3216–18	75
B	3528–21	85
C	6032–28	110
D	7343–31	150
X	7343–43	165
E	7360–38	200
S	3216–12	60
T	3528–12	70
U	6032–15	90
V	7343–20	125
T510X	7343–43	270
T510E	7360–38	285

Using the P max of the device, the maximum allowable rms ripple current or voltage may be determined.

$I(max) = \sqrt{P\ max/R}$
$E(max) = Z\sqrt{P\ max/R}$

I = rms ripple current (amperes)
E = rms ripple voltage (volts)
P max = maximum power dissipation (watts)
R = ESR at specified frequency (ohms)
Z = Impedance at specified frequency (ohms)

Reverse Voltage

Solid tantalum capacitors are polar devices and may be permanently damaged or destroyed if connected with the wrong polarity. The positive terminal is identified on the capacitor body by a stripe plus in some cases a beveled edge. A small degree of transient reverse voltage is permissible for short periods per the table. The capacitors should not be operated continuously in reverse mode, even within these limits.

Temperature	Permissible Transient Reverse Voltage
25°C	15% of Rated Voltage
85°C	5% of Rated Voltage
125°C	1% of Rated Voltage

Table 2 – Land Dimensions/Courtyard

KEMET	Metric Size Code	Density Level A: Maximum (Most) Land Protrusion (mm)					Density Level B: Median (Nominal) Land Protrusion (mm)					Density Level C: Minimum (Least) Land Protrusion (mm)				
Case	EIA	W	L	S	V1	V2	W	L	S	V1	V2	W	L	S	V1	V2
A	3216–18	1.35	2.20	0.62	6.02	2.80	1.23	1.80	0.82	4.92	2.30	1.13	1.42	0.98	4.06	2.04
B	3528–21	2.35	2.21	0.92	6.32	4.00	2.23	1.80	1.12	5.22	3.50	2.13	1.42	1.28	4.36	3.24
C	6032–28	2.35	2.77	2.37	8.92	4.50	2.23	2.37	2.57	7.82	4.00	2.13	1.99	2.73	6.96	3.74
D	7343–31	2.55	2.77	3.67	10.22	5.60	2.43	2.37	3.87	9.12	5.10	2.33	1.99	4.03	8.26	4.84
E[1]	7360–38	4.25	2.77	3.67	10.22	7.30	4.13	2.37	3.87	9.12	6.80	4.03	1.99	4.03	8.26	6.54
S[2]	3216–12	1.35	2.20	0.62	6.02	2.80	1.23	1.80	0.82	4.92	2.30	1.13	1.42	0.98	4.06	2.04
T	3528–12	2.35	2.20	0.92	6.32	4.00	2.23	1.80	1.12	5.22	3.50	2.13	1.42	1.28	4.36	3.24
U	6032–15	2.35	2.77	2.37	8.92	4.50	2.23	2.37	2.57	7.82	4.00	2.13	1.99	2.73	6.96	3.74
V	7343–21	2.55	2.77	3.67	10.22	5.60	2.43	2.37	3.87	9.12	5.10	2.33	1.99	4.03	8.26	4.84
X[1]	7343–43	2.55	2.77	3.67	10.22	5.60	2.43	2.37	3.87	9.12	5.10	2.33	1.99	4.03	8.26	4.84

Density Level A: *For low-density product applications. Recommended for wave solder applications and provides a wider process window for reflow solder processes.*
Density Level B: *For products with a moderate level of component density. Provides a robust solder attachment condition for reflow solder processes.*
Density Level C: *For high component density product applications. Before adapting the minimum land pattern variations the user should perform qualification testing based on the conditions outlined in IPC standard 7351 (IPC–7351).*
[1] Height of these chips may create problems in wave soldering.
[2] Land pattern geometry is too small for silkscreen outline.

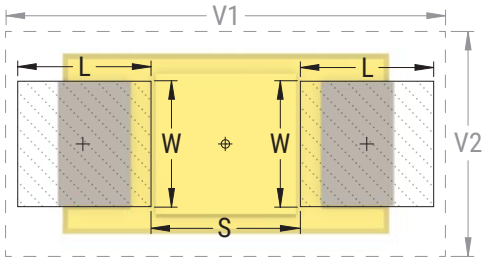

Grid Placement Courtyard

Soldering Process

The KEMET families of surface mount capacitors are compatible with wave (single or dual), convection, IR, or vapor phase reflow techniques. Preheating of these components is recommended to avoid extreme thermal stress. KEMET's recommended profile conditions for convection and IR reflow reflect the profile conditions of the IPC/J–STD–020D standard for moisture sensitivity testing. The devices can safely withstand a maximum of three reflow passes at these conditions.

Please note that although the X/7343–43 case size can withstand wave soldering, the tall profile (4.3 mm maximum) dictates care in wave process development.

Hand soldering should be performed with care due to the difficulty in process control. If performed, care should be taken to avoid contact of the soldering iron to the molded case. The iron should be used to heat the solder pad, applying solder between the pad and the termination, until reflow occurs. Once reflow occurs, the iron should be removed immediately. “Wiping” the edges of a chip and heating the top surface is not recommended.

During typical reflow operations, a slight darkening of the gold-colored epoxy may be observed. This slight darkening is normal and not harmful to the product. Marking permanency is not affected by this change.

Profile Feature	SnPb Assembly	Pb-Free Assembly
Preheat/Soak		
Temperature Minimum (T_{Smin})	100°C	150°C
Temperature Maximum (T_{Smax})	150°C	200°C
Time (t_s) from T_{smin} to T_{smax})	60 – 120 seconds	60 – 120 seconds
Ramp-up Rate (T_L to T_P)	3°C/second maximum	3°C/second maximum
Liquidous Temperature (T_L)	183°C	217°C
Time Above Liquidous (t_L)	60 – 150 seconds	60 – 150 seconds
Peak Temperature (T_P)	220°C* 235°C**	250°C* 260°C**
Time within 5°C of Maximum Peak Temperature (t_p)	20 seconds maximum	30 seconds maximum
Ramp-down Rate (T_P to T_L)	6°C/second maximum	6°C/second maximum
Time 25°C to Peak Temperature	6 minutes maximum	8 minutes maximum

Note: All temperatures refer to the center of the package, measured on the package body surface that is facing up during assembly reflow.
** For Case Size height > 2.5 mm*
*** For Case Size height ≤ 2.5 mm*

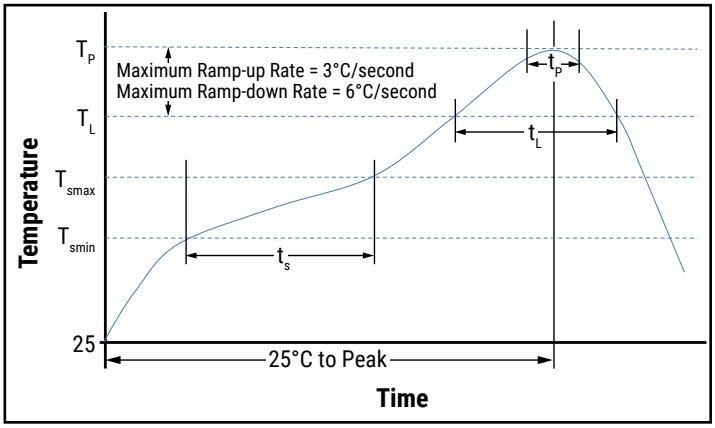

Storage

Tantalum chip capacitors should be stored in normal working environments. While the chips themselves are quite robust in other environments, solderability will be degraded by exposure to high temperatures, high humidity, corrosive atmospheres, and long term storage. In addition, packaging materials will be degraded by high temperature – reels may soften or warp and tape peel force may increase. KEMET recommends that maximum storage temperature not exceed 40°C and maximum storage humidity not exceed 60% relative humidity. Temperature fluctuations should be minimized to avoid condensation on the parts and atmospheres should be free of chlorine and sulphur bearing compounds. For optimized solderability, chip stock should be used promptly, preferably within three years of receipt.

Construction

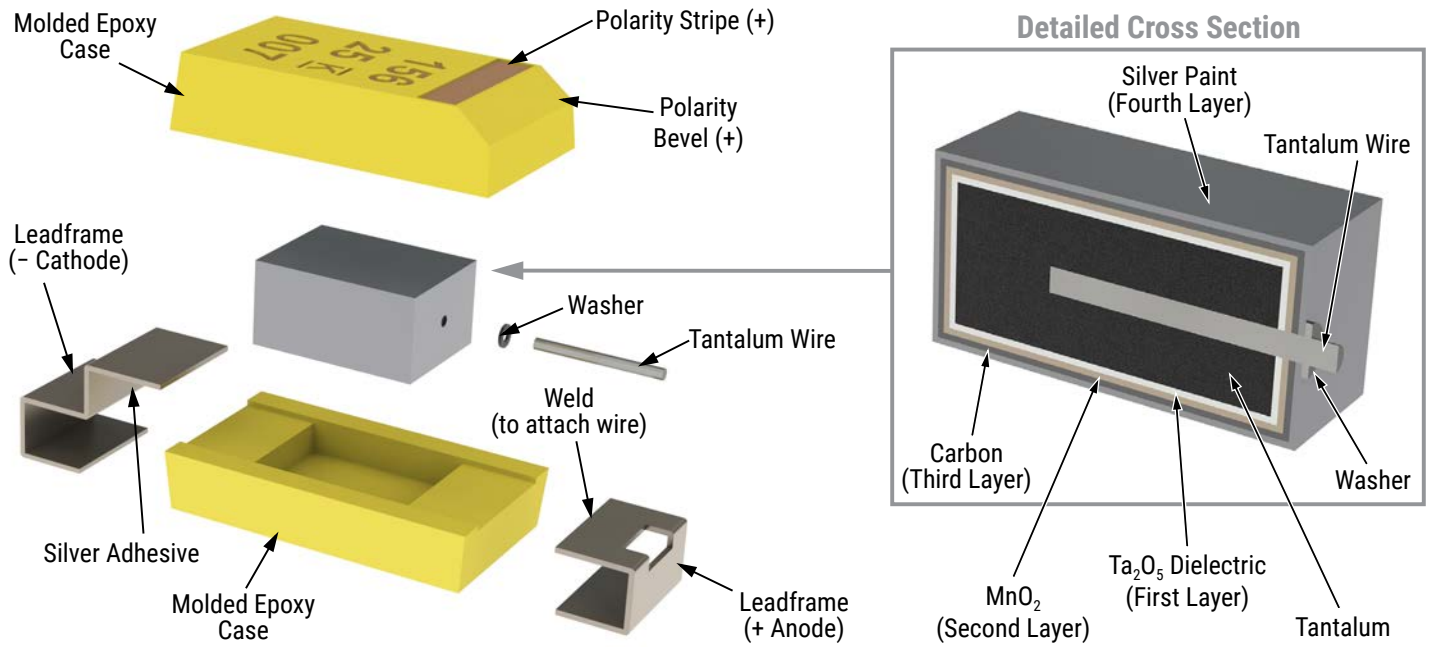

Capacitor Marking

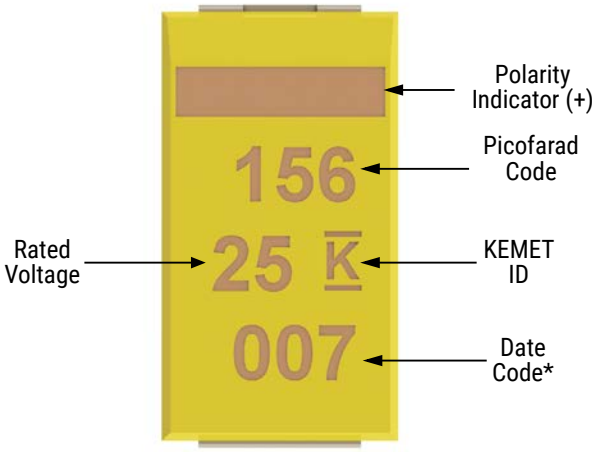

Date Code *	
1st digit = last number of year	6 = 2016 7 = 2017 8 = 2018 9 = 2019 0 = 2020
2nd and 3rd digit = week of the year	01 = 1st week of the year to 52 = 52nd week of the year

* 007 = 7th week of 2020

Tape & Reel Packaging Information

KEMET's molded chip capacitor families are packaged in 8 and 12 mm plastic tape on 7" and 13" reels in accordance with *EIA Standard 481*: Embossed Carrier Taping of Surface Mount Components for Automatic Handling. This packaging system is compatible with all tape-fed automatic pick-and-place systems.

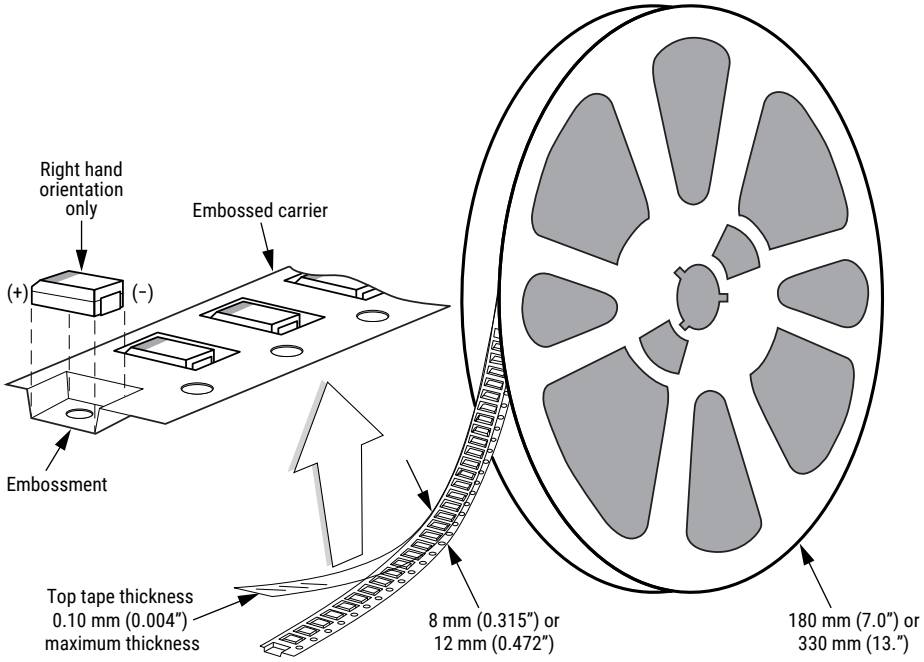

Table 3 – Packaging Quantity

Case Code		Tape Width (mm)	7" Reel*	13" Reel*
KEMET	EIA			
S	3216-12	8	2,500	10,000
T	3528-12	8	3,000	10,000
M	3528-15	8	2,500	8,000
U	6032-15	12	1,000	5,000
L	6032-19	12	1,000	3,000
W	7343-15	12	1,000	3,000
Z	7343-17	12	1,000	3,000
V	7343-20	12	1,000	3,000
A	3216-18	8	2,000	9,000
B	3528-21	8	2,000	8,000
C	6032-28	12	500	3,000
D	7343-31	12	500	2,500
Q	7343-12	12	1,000	3,000
Y	7343-40	12	500	2,000
X	7343-43	12	500	2,000
E/T428P	7360-38	12	500	2,000
H	7360-20	12	1,000	2,500
O	7360-43	12	250	1,000

** No C-Spec required for 7" reel packaging. C-7280 required for 13" reel packaging.*

Figure 1 – Embossed (Plastic) Carrier Tape Dimensions

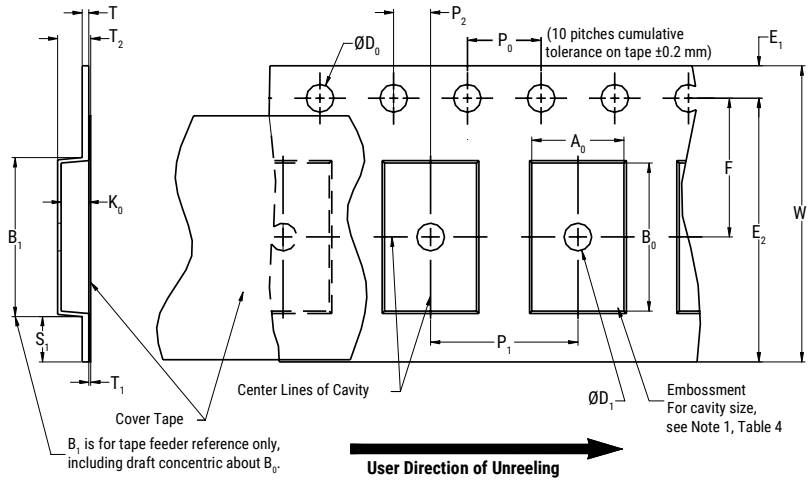

Table 4 – Embossed (Plastic) Carrier Tape Dimensions

Metric will govern

Constant Dimensions — Millimeters (Inches)									
Tape Size	D_0	D_1 Minimum Note 1	E_1	P_0	P_2	R Reference Note 2	S_1 Minimum Note 3	T Maximum	T_1 Maximum
8 mm	1.5 +0.10/−0.0 (0.059 +0.004/−0.0)	1.0 (0.039)	1.75 ±0.10 (0.069 ±0.004)	4.0 ±0.10 (0.157 ±0.004)	2.0 ±0.05 (0.079 ±0.002)	25.0 (0.984)	0.600 (0.024)	0.600 (0.024)	0.100 (0.004)
12 mm		1.5 (0.059)				30 (1.181)			

Variable Dimensions — Millimeters (Inches)								
Tape Size	Pitch	B_1 Maximum Note 4	E_2 Minimum	F	P_1	T_2 Maximum	W Maximum	A_0, B_0 & K_0
8 mm	Single (4 mm)	4.35 (0.171)	6.25 (0.246)	3.5 ±0.05 (0.138 ±0.002)	2.0 ±0.05 or 4.0 ±0.10 (0.079 ±0.002 or 0.157 ±0.004)	2.5 (0.098)	8.3 (0.327)	Note 5
12 mm	Single (4 mm) and Double (8 mm)	8.2 (0.323)	10.25 (0.404)	5.5 ±0.05 (0.217 ±0.002)	2.0 ±0.05 (0.079 ±0.002) or 4.0 ±0.10 (0.157 ±0.004) or 8.0 ±0.10 (0.315 ±0.004)	4.6 (0.181)	12.3 (0.484)	

1. *The embossment hole location shall be measured from the sprocket hole controlling the location of the embossment. Dimensions of embossment location and hole location shall be applied independent of each other.*
2. *The tape, with or without components, shall pass around R without damage (see Figure 4).*
3. *If S_1 < 1.0 mm, there may not be enough area for cover tape to be properly applied (see EIA Standard 481–D, paragraph 4.3, section b).*
4. *B_1 dimension is a reference dimension for tape feeder clearance only.*
5. *The cavity defined by A_0, B_0 and K_0 shall surround the component with sufficient clearance that:*
   (a) the component does not protrude above the top surface of the carrier tape.
   (b) the component can be removed from the cavity in a vertical direction without mechanical restriction, after the top cover tape has been removed.
   (c) rotation of the component is limited to 20° maximum for 8 and 12 mm tapes (see Figure 2).
   (d) lateral movement of the component is restricted to 0.5 mm maximum for 8 mm and 12 mm wide tape (see Figure 3).
   (e) see Addendum in EIA Standard 481–D for standards relating to more precise taping requirements.

Packaging Information Performance Notes

1. Cover tape break force: 1.0 kg minimum.
2. Cover tape peel strength: The total peel strength of the cover tape from the carrier tape shall be:

Tape Width	Peel Strength
8 mm	0.1 to 1.0 newton (10 to 100 gf)
12 mm	0.1 to 1.3 newton (10 to 130 gf)

The direction of the pull shall be opposite the direction of the carrier tape travel. The pull angle of the carrier tape shall be 165° to 180° from the plane of the carrier tape. During peeling, the carrier and/or cover tape shall be pulled at a velocity of 300 ±10 mm/minute.
3. Labeling: Bar code labeling (standard or custom) shall be on the side of the reel opposite the sprocket holes. *Refer to EIA Standards 556 and 624*.

Figure 2 – Maximum Component Rotation

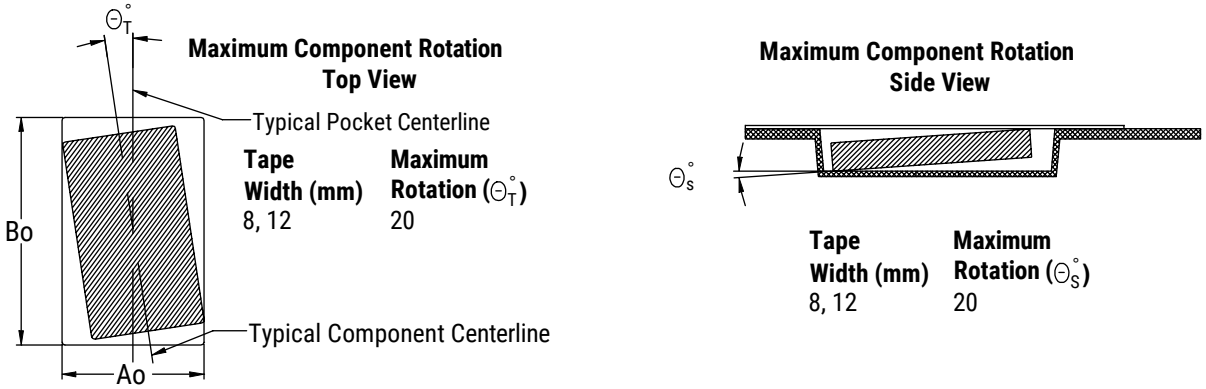

Figure 3 – Maximum Lateral Movement

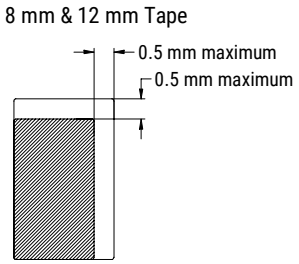

Figure 4 – Bending Radius

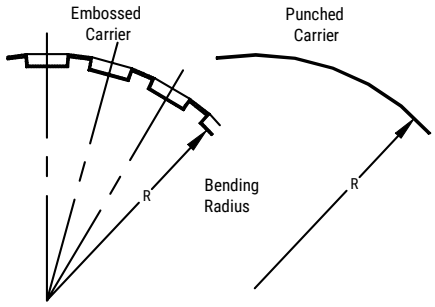

Figure 5 – Reel Dimensions

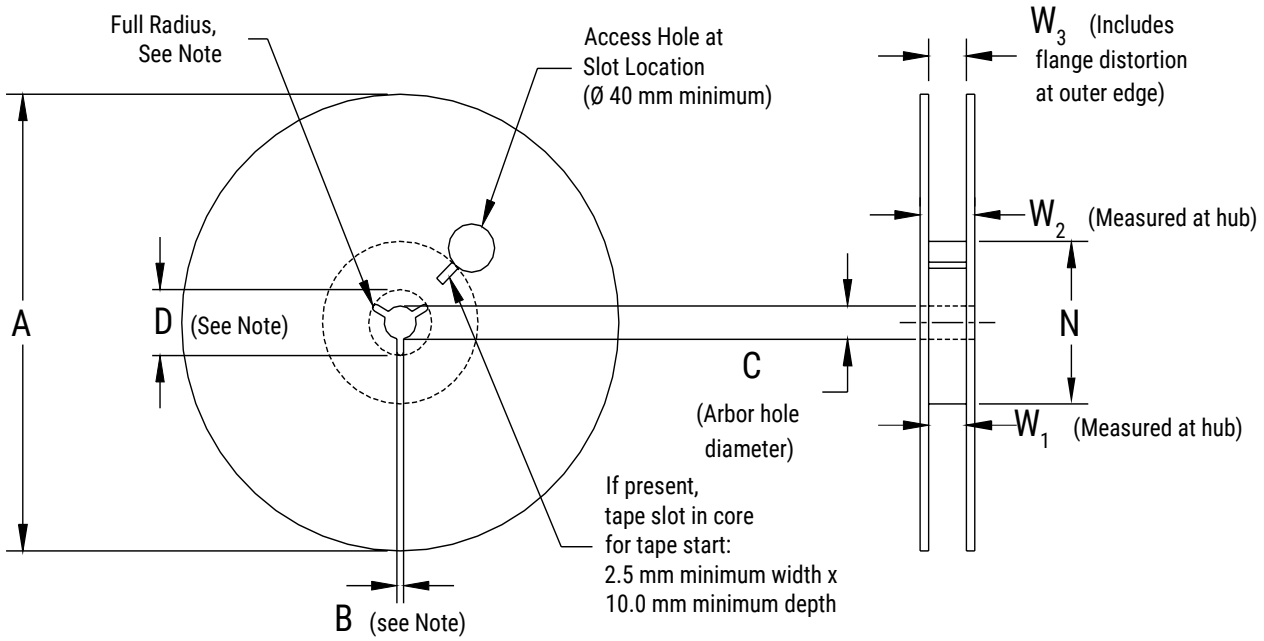

Note: Drive spokes optional; if used, dimensions B and D shall apply.

Table 5 – Reel Dimensions

Metric will govern

Constant Dimensions — Millimeters (Inches)				
Tape Size	A	B Minimum	C	D Minimum
8 mm	178 ±0.20 (7.008 ±0.008) or 330 ±0.20 (13.000 ±0.008)	1.5 (0.059)	13.0 +0.5/−0.2 (0.521 +0.02/−0.008)	20.2 (0.795)
12 mm				

Variable Dimensions — Millimeters (Inches)				
Tape Size	N Minimum	W_1	W_2 Maximum	W_3
8 mm	50 (1.969)	8.4 +1.5/−0.0 (0.331 +0.059/−0.0)	14.4 (0.567)	Shall accommodate tape width without interference
12 mm		12.4 +2.0/−0.0 (0.488 +0.078/−0.0)	18.4 (0.724)	

Figure 6 – Tape Leader & Trailer Dimensions

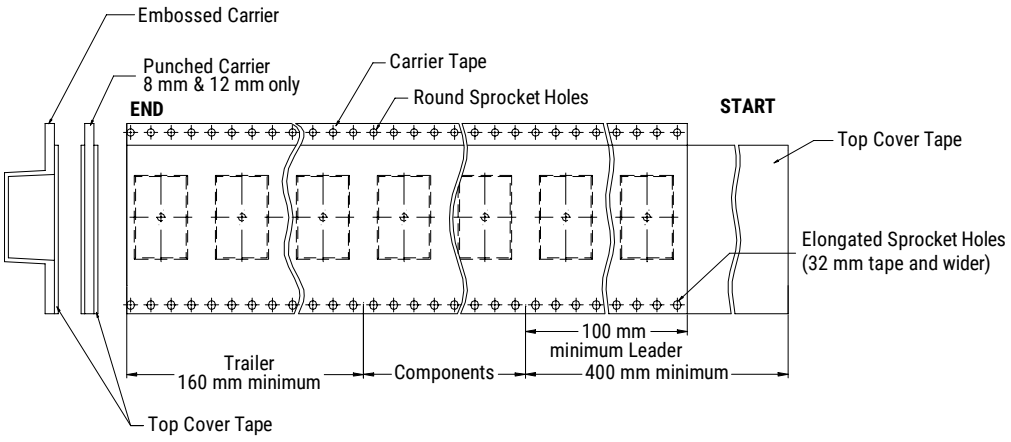

Figure 7 – Maximum Camber

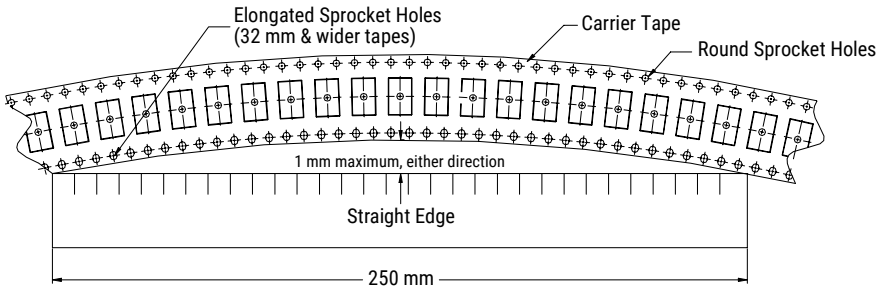

KEMET Electronics Corporation Sales Offices

For a complete list of our global sales offices, please visit www.kemet.com/sales.

Disclaimer

All product specifications, statements, information and data (collectively, the "Information") in this datasheet are subject to change. The customer is responsible for checking and verifying the extent to which the Information contained in this publication is applicable to an order at the time the order is placed. All Information given herein is believed to be accurate and reliable, but it is presented without guarantee, warranty, or responsibility of any kind, expressed or implied.

Statements of suitability for certain applications are based on KEMET Electronics Corporation's ("KEMET") knowledge of typical operating conditions for such applications, but are not intended to constitute – and KEMET specifically disclaims – any warranty concerning suitability for a specific customer application or use. The Information is intended for use only by customers who have the requisite experience and capability to determine the correct products for their application. Any technical advice inferred from this Information or otherwise provided by KEMET with reference to the use of KEMET's products is given gratis, and KEMET assumes no obligation or liability for the advice given or results obtained.

Although KEMET designs and manufactures its products to the most stringent quality and safety standards, given the current state of the art, isolated component failures may still occur. Accordingly, customer applications which require a high degree of reliability or safety should employ suitable designs or other safeguards (such as installation of protective circuitry or redundancies) in order to ensure that the failure of an electrical component does not result in a risk of personal injury or property damage.

Although all product–related warnings, cautions and notes must be observed, the customer should not assume that all safety measures are indicted or that other measures may not be required.

KEMET is a registered trademark of KEMET Electronics Corporation.

Мы молодая и активно развивающаяся компания в области поставок электронных компонентов. Мы поставляем электронные компоненты отечественного и импортного производства напрямую от производителей и с крупнейших складов мира.

Благодаря сотрудничеству с мировыми поставщиками мы осуществляем комплексные и плановые поставки широчайшего спектра электронных компонентов.

Собственная эффективная логистика и склад в обеспечивает надежную поставку продукции в точно указанные сроки по всей России.

Мы осуществляем техническую поддержку нашим клиентам и предпродажную проверку качества продукции. На все поставляемые продукты мы предоставляем гарантию .

Осуществляем поставки продукции под контролем ВП МО РФ на предприятия военно-промышленного комплекса России , а также работаем в рамках 275 ФЗ с открытием отдельных счетов в уполномоченном банке. Система менеджмента качества компании соответствует требованиям ГОСТ ISO 9001.

Минимальные сроки поставки, гибкие цены, неограниченный ассортимент и индивидуальный подход к клиентам являются основой для выстраивания долгосрочного и эффективного сотрудничества с предприятиями радиоэлектронной промышленности, предприятиями ВПК и научно-исследовательскими институтами России.

С нами вы становитесь еще успешнее!

Наши контакты:

Телефон: +7 812 627 14 35

Электронная почта: sales@st-electron.ru

Адрес: 198099, Санкт-Петербург, Промышленная ул, дом № 19, литера Н, помещение 100-Н Офис 331