FAIRCHILD SEMICONDUCTOR®

# AUTOMOTIVE SOLUTIONS

Power Semiconductors Maximize Efficiency and Reliability

Smart Power

Gate Drivers

Rectifiers

Ignition IGBTs

IGBTs

MOSFETs

# INTRODUCTION

Automotive Electronic Designers need suppliers who understand their business. With a comprehensive approach to quality, safety and reliability, Fairchild distinguishes itself by providing AEC qualified solutions that solve complex challenges in the automotive market.

**Product Design**

Fairchild has a legacy of more than 50 years as a worldwide automotive semiconductor supplier. Our portfolio of products covers the full spectrum of the automotive power space. Fairchild's Smart Power products combine power discrete and control IC technologies with innovative packaging to create modular-level solutions for DC and AC motor drive, load control, solenoid operation, lighting, power distribution, injection and ignition. Our leading-edge IGBTs, MOSFETs, injector drivers, gate drivers and modules are used in production power train, engine management, electric power-assist steering (EPAS), motor drives, power inverters and other systems that require high quality components. We partner with automotive customers to optimize performance, reduce component count, improve time-to-market, and enhance the overall value proposition. From concept through production, Fairchild partners with you to develop solutions that meet the needs of advanced vehicles, with modeling and simulation for both thermal and electrical performance.

BUILT-IN QUALITY AT EVERY STEP

Fairchild also offers a variety of automotive products in un-sawn wafer, sawn wafer and KGD (Known Good Die). Fairchild's Known Good Die program supports maximum yield in the application, using SPC to assure tight parameter distribution. After singulation, all die are 100% electrically tested to the datasheet. Tests include high current testing.

**Quality**

Our best-in-class products are complemented by a focused Automotive Product Line, with dedicated resources, including global power labs and regional applications support. Our automotive product development and manufacturing sites are QS-9000 and TS-16939 certified. Automotive products are manufactured and assembled in-house in Fairchild operated facilities.

KEY APPLICATIONS ..... 4-6

ELECTRICAL CENTER/LOAD CONTROL ..... 4

POWER INVERTER ..... 4

DC MOTOR CONTROL/BRUSHLESS MOTOR DRIVE ..... 5

AUTOMOTIVE IGNITION ..... 6

AUTOMOTIVE INJECTION ..... 6

POWER PRODUCTS ..... 7-14

MOSFETs ..... 7

N-CHANNEL ..... 7-9

INJECTOR/SOLENOID DRIVER ..... 9

P-CHANNEL ..... 9-10

COMPLEMENTARY PAIRS ..... 10

IGBTs ..... 10

IGBTs ..... 10

IGNITION IGBTs ..... 11

RECTIFIERS ..... 12

ULTRAFAST RECTIFIERS ..... 12

HYPERFAST RECTIFIERS ..... 12

STEALTH™ ULTRASOFT RECOVERY RECTIFIERS ..... 12

GATE DRIVERS ..... 12

HIGH-VOLTAGE (HVIC) GATE DRIVERS ..... 12

HIGH-SPEED, LOW-SIDE GATE DRIVERS ..... 13

SMART POWER ..... 14

SMART HIGH-SIDE SWITCHES ..... 14

HIGH CURRENT BRIDGES ..... 14

AUTOMOTIVE POWER MODULES ..... 15

## Power Distribution Center

The primary function of smart switches is to replace automotive relays and fuses, to protect vehicle wiring and to improve diagnostics of electrical loads. With smart switches, it is possible to combine switching and protection functions in a single device. Fairchild has several offerings for load control and power distribution, covering current ranges for exterior and interior lighting, powered actuators, motors and auxiliary power.

Power distribution systems are often located in multiple places within a vehicle, both interior and under the hood. The temperature ranges of Fairchild's products are compatible with under the hood environments, load dump and other electrical transients. They are fully qualified to AEC standards.

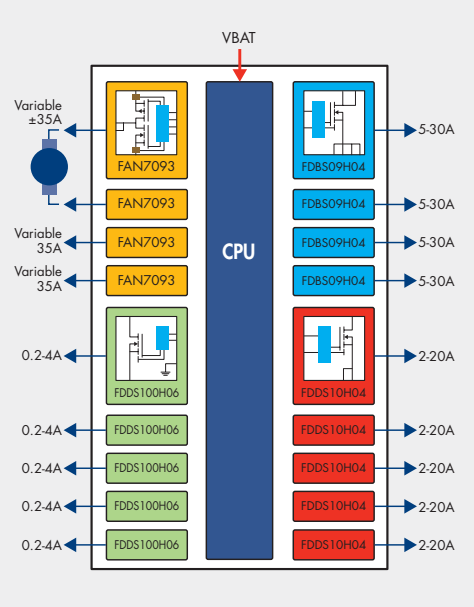


### Design Advantages Include:

- Analog current monitoring of loads
- PWM capability for lighting
- Fault isolation and reporting

## Power Inverter

Fairchild provides solutions for DC-DC conversion for all power ranges. From low power AC accessory inverters to multi-kilowatt HV/EV down converters for $12V_{DC}$ power.

### Design Advantages Include:

- Low propagation delay of gate drivers efficient switching
- Planar technology high voltage MOSFET for output robustness
- Half-bridge gate drivers in output stage can provide high noise immunity and dead time control
- MillerDrive™ low-side gate drivers provide high peak current and low voltage drop

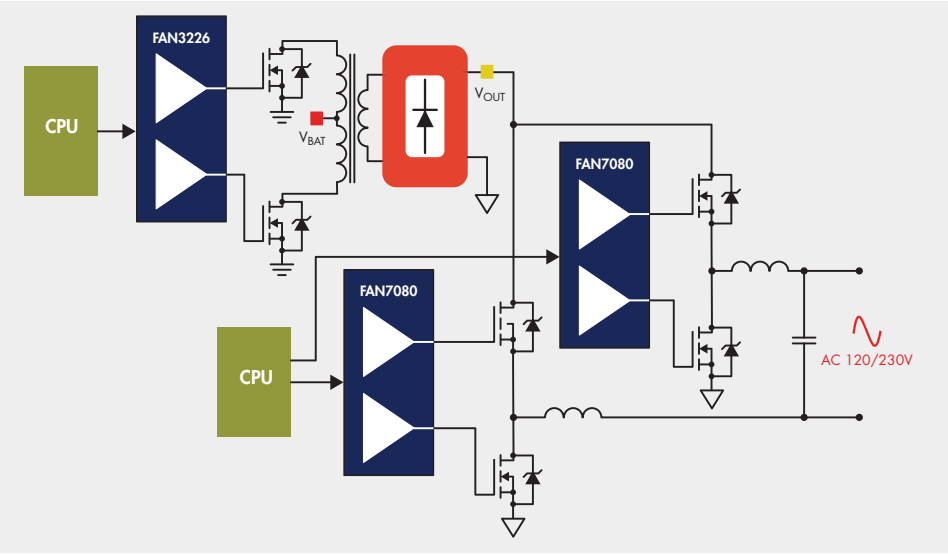

# DC MOTOR CONTROL/BRUSHLESS MOTOR DRIVE

Fairchild products provide solutions for driving DC motors efficiently over a wide range load in full- and half-bridge configurations. For higher currents, half-bridge gate drivers like the FAN7080 and FAN7190 can be used with discrete MOSFETs and IGBTs to control motors operating from 12V to 600$V_{DC}$. For 12$V_{DC}$ motors, operating in the ~30A range, the FAN7093 provides full- and half-bridge control, with current sensing and diagnostic feedback common in load sensing applications such as seat tracks, window lift, powered lift gate, cooling fan and reversing wipers.

**Design Advantages Include:**

- High efficiency over wide PWM range
- Solutions for all load ranges in ICE, HV and EV vehicle applications
- Up to 50kHz operation typically capable

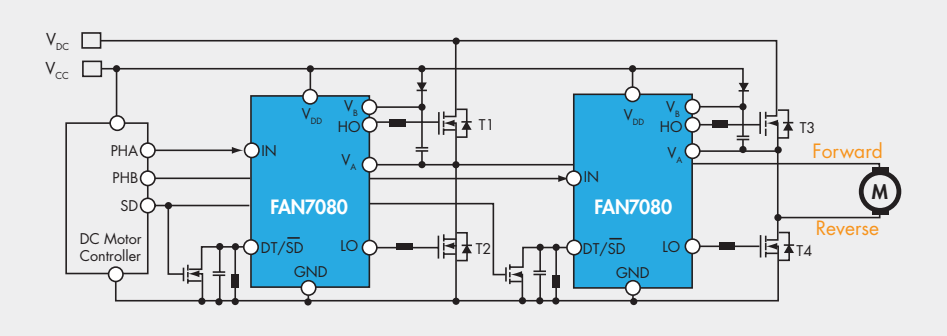


*Discrete HVIC Based Full-Bridge*

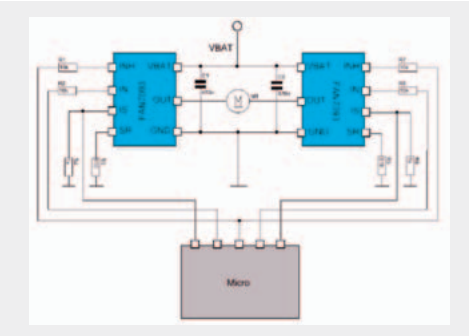


*Smart Power P/N Based Full-Bridge*

**Brushless Motor Drive**

Three-phase motor control, both from low voltage and HV supply are used for driving variable speed powered systems.

**Design Advantages Include:**

- HVIC gate drivers combine to drive each half-bridge providing bootstrap gate drive
- Planar MOSFETs available for HV application robustness

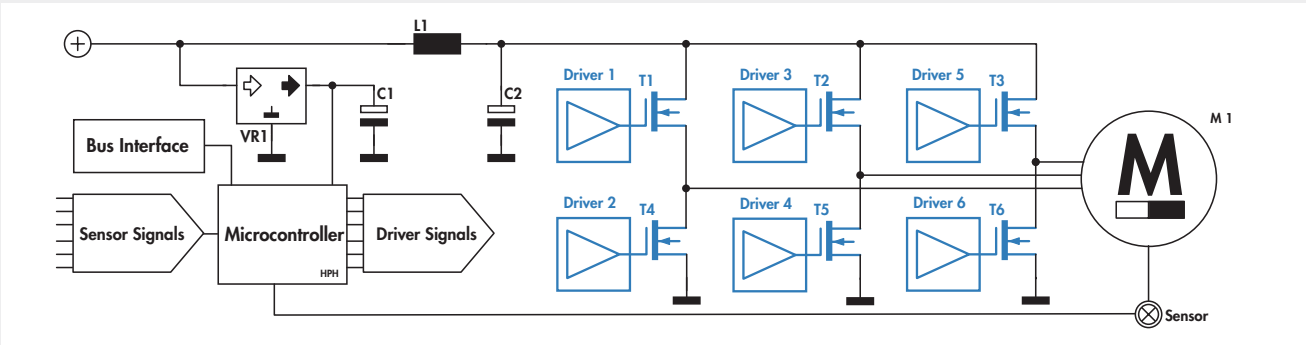


*Three-Phase Motor Control*

EcoSPARK® I and EcoSPARK® 2 igniters provide 200 to 500mJ SCIS energy ratings. Standard product ranges from 300 to 500V clamp.

Customer specific devices, including Smart IGBT products with a co-packaged control IC can provide maximum dwell, current limit and other features.

## Automotive Ignition

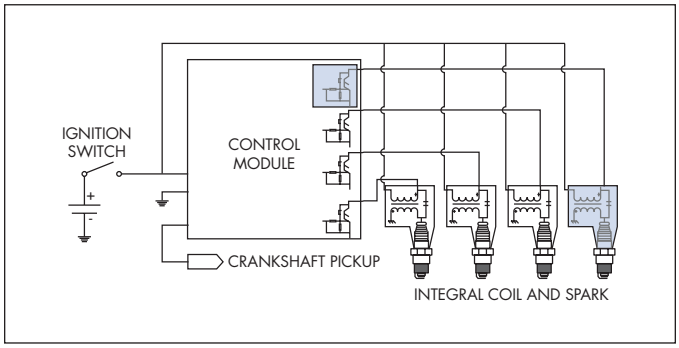


*Coil-on-Plug (COP) System Architecture*

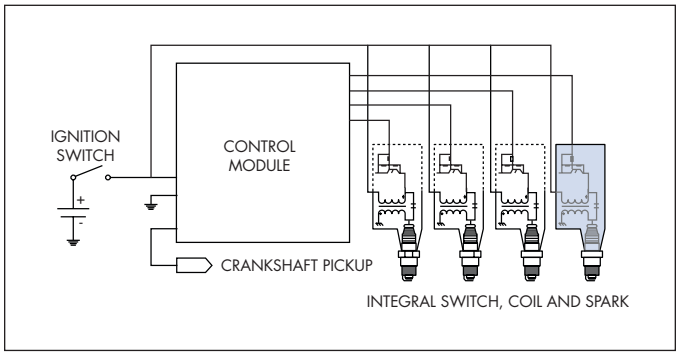


*Switch-on-Coil System Architecture*

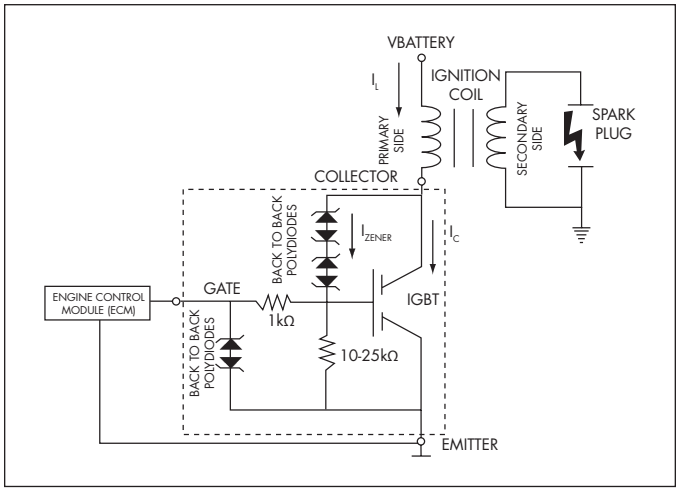


*Typical IGBT Igniter Circuit*

## Automotive Injection

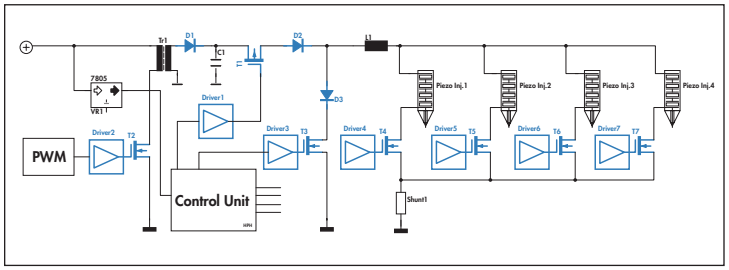


*Piezo Activated Semi-Resonant Direct Injection*

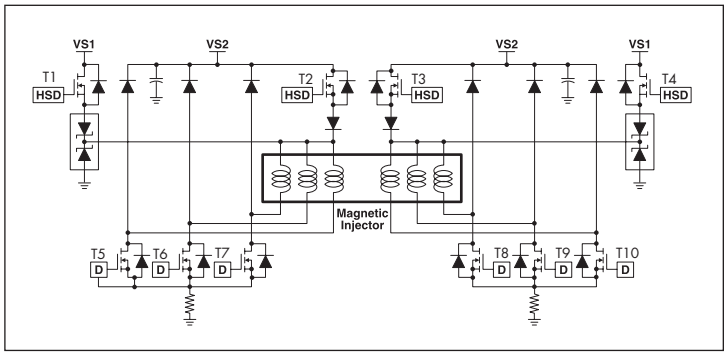


*Common Rail Solenoid Direct Injection (CR-SDI)*

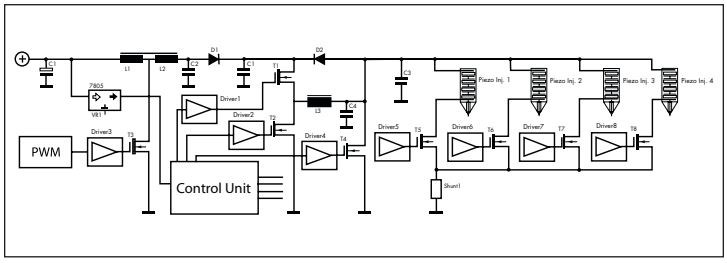


*Common Rail Piezo Direct Injection (CR-PDI)*

# N-CHANNEL MOSFETs

## N-Channel MOSFETs (Trench)

| Product Number *(20V to 25V Low Logic Level)* | Polarity | $BV_{DSS}$ Min. (V) | Configuration | $R_{DS(ON)}$ Max. (Ω) @ $V_{GS}$ = 4.5V | $R_{DS(ON)}$ Max. (Ω) @ $V_{GS}$ = 2.7V | Qg Typ. (nC) @ $V_{GS}$ = 4.5V | $I_D$ (A) | $P_D$ (W) | $R_{\Theta JC}$ (°C/W) | Package |
|---|---|---|---|---|---|---|---|---|---|---|
| FDS6898AZ_F085[1] | N | 20 | Dual | 0.014 | 0.018 | 16 | 9.4 | 2 | 40 | SO-8 |
| FDG6301N_F085 | N | 25 | Dual | 4 | 5 | 0.29 | 0.22 | 0.3 | 415 | SC70 |

| Product Number *(30V Logic Level)* | Polarity | $BV_{DSS}$ Min. (V) | Configuration | $R_{DS(ON)}$ Max. (Ω) @ $V_{GS}$ = 10V | $R_{DS(ON)}$ Max. (Ω) @ $V_{GS}$ = 4.5V | Qg Typ. (nC) @ $V_{GS}$ = 5V | $I_D$ (A) | $P_D$ (W) | $R_{\Theta JC}$ (°C/W) | Package |
|---|---|---|---|---|---|---|---|---|---|---|
| FDB8832_F085 | N | 30 | Single | 0.0019 | 0.0022 | 100 | 80 | 300 | 0.5 | TO-263 (D2PAK) |
| FDB8860_F085 | N | 30 | Single | 0.0023 | 0.0027 | 89 | 80 | 254 | 0.59 | TO-263 (D2PAK) |
| FDD8870_F085 | N | 30 | Single | 0.0039 | 0.0044 | 48 | 160 | 160 | 0.94 | TO-252 (DPAK) |
| FDB8870_F085 | N | 30 | Single | 0.0039 | 0.0044 | 56 | 160 | 160 | 0.94 | TO-263 (D2PAK) |
| FDP8870_F085 | N | 30 | Single | 0.0041 | 0.0046 | 56 | 156 | 160 | 0.94 | TO220 3-LEAD |
| FDD8896_F085 | N | 30 | Single | 0.0057 | 0.0068 | 24 | 94 | 80 | 1.88 | TO-252 (DPAK) |
| FDB8896_F085 | N | 30 | Single | 0.0057 | 0.0068 | 25 | 93 | 80 | 0.53 | TO-263 (D2PAK) |
| FDP8896_F085 | N | 30 | Single | 0.0057 | 0.0068 | 25 | 92 | 80 | 0.53 | TO-263 (D2PAK) |
| FDS8984_F085 | N | 30 | Dual | 0.023 | 0.03 | 5 | 7 | 2 | 40 | SO-8 |

| Product Number *(30V Standard Gate)* | Polarity | $BV_{DSS}$ Min. (V) | Configuration | $R_{DS(ON)}$ Max. (Ω) @ $V_{GS}$ = 10V | $R_{DS(ON)}$ Max. (Ω) @ $V_{GS}$ = 4.5V | Qg Typ. (nC) @ $V_{GS}$ = 10V | $I_D$ (A) | $P_D$ (W) | $R_{\Theta JC}$ (°C/W) | Package |
|---|---|---|---|---|---|---|---|---|---|---|
| FDB8132_F085 | N | 30 | Single | 0.0016 | - | 209 | 80 | 341 | 0.44 | TO-263 (D2PAK) |
| FDB8160_F085 | N | 50 | Single | 0.0018 | - | 187 | 80 | 254 | 0.59 | TO-263 (D2PAK) |

| Product Number *(40V Logic Level)* | Polarity | $BV_{DSS}$ Min. (V) | Configuration | $R_{DS(ON)}$ Max. (Ω) @ $V_{GS}$ = 10V | $R_{DS(ON)}$ Max. (Ω) @ $V_{GS}$ = 4.5V | Qg Typ. (nC) @$V_{GS}$ = 5V | $I_D$ (A) | $P_D$ (W) | $R_{\Theta JC}$ (°C/W) | Package |
|---|---|---|---|---|---|---|---|---|---|---|
| FDD8444L_F085 | N | 40 | Single | 0.0052 | 0.006 | 46 | 50 | 153 | 0.98 | TO-252 (DPAK) |
| FDD8447L_F085 | N | 40 | Single | 0.0085 | 0.011 | 37 | 50 | 65 | 2.3 | TO-252 (DPAK) |
| FDD8453LZ_F085[1] | N | 40 | Single | 0.0065 | 0.0078 | 32 | 50 | 118 | 1.27 | TO-252 (DPAK) |
| FDS8449_F085 | N | 40 | Single | 0.029 | 0.036 | 7.7 | 7.6 | 2.5 | 25 | SO-8 |
| FDS8949_F085 | N | 40 | Dual | 0.029 | 0.036 | 7.7 | 6 | 2.5 | 40 | SO-8 |

| Product Number *(40V Standard Gate)* | Polarity | $BV_{DSS}$ Min. (V) | Configuration | $R_{DS(ON)}$ Max. (Ω) @ $V_{GS}$ = 10V | $R_{DS(ON)}$ Max. (Ω) @ $V_{GS}$ = 4.5V | Qg Typ. (nC) @ $V_{GS}$ = 10V | $I_D$ (A) | $P_D$ (W) | $R_{\Theta JC}$ (°C/W) | Package |
|---|---|---|---|---|---|---|---|---|---|---|
| FDB9403_F085* | N | 40 | Single | 0.0014 | - | 110 | 120 | 300 | 0.5 | TO-263(D2PAK) |
| FDD9407_F085* | N | 40 | Single | 0.00187 | - | 87 | 100 | 180 | 0.95 | TO-252 (DPAK) |
| FDB9406_F085* | N | 40 | Single | 0.0016 | - | 92 | 120 | 250 | 0.63 | TO-263 (D2PAK) |
| FDI9406_F085* | N | 40 | Single | 0.0018 | - | 92 | 115 | 200 | 0.72 | TO-262 (I2PAK) |
| FDB8441_F085 | N | 40 | Single | 0.0025 | - | 280 | 80 | 300 | 0.5 | TO-263 (D2PAK) |
| FDI8441_F085 | N | 40 | Single | 0.0027 | - | 280 | 80 | 300 | 0.5 | TO-262 (I2PAK) |
| FDP8441_F085 | N | 40 | Single | 0.0027 | - | 215 | 80 | 300 | 0.5 | TO220 3-LEAD |
| FDD9409_F085* | N | 40 | Single | 0.00285 | - | 70 | 80 | 150 | 1.02 | TO-252 (DPAK) |
| FDB8442_F085 | N | 40 | Single | 0.0029 | - | 181 | 80 | 254 | 0.59 | TO-263 (D2PAK) |
| FDB8443_F085 | N | 40 | Single | 0.003 | - | 142 | 80 | 254 | 0.8 | TO-263 (D2PAK) |
| FDP8443_F085 | N | 40 | Single | 0.0035 | - | 142 | 80 | 254 | 0.8 | TO-220 3-LEAD |
| FDB8444_F085 | N | 40 | Single | 0.0055 | - | 91 | 70 | 167 | 0.9 | TO-263 (D2PAK) |
| FDD8444_F085 | N | 40 | Single | 0.0052 | - | 89 | 50 | 153 | 0.98 | TO-252 (DPAK) |
| FDB8445_F085 | N | 40 | Single | 0.009 | - | 44 | 70 | 92 | 1.63 | TO-263 (D2PAK) |
| FDD8445_F085 | N | 40 | Single | 0.0087 | - | 45 | 50 | 79 | 1.9 | TO-252 (DPAK) |

*[1] With ESD Gate Protection Zeners*
** In development*

## N-Channel MOSFETs (Trench)

| Product Number (60V Logic Level) | Polarity | $BV_{DSS}$ Min. (V) | Configuration | $R_{DS(ON)}$ Max. (Ω) @ $V_{GS}$ = | | Qg Typ. (nC) @ $V_{GS}$ = 4.5V | $I_D$ (A) | $P_D$ (W) | $R_{\Theta JC}$ (°C/W) | Package |
|---|---|---|---|---|---|---|---|---|---|---|
| | | | | 10V | 4.5V | | | | | |
| FDB14AN06LA0_F085 | N | 60 | Single | 0.0116 | 0.0146 | 24 | 67 | 125 | 1.2 | TO-263 (D2PAK) |
| FDD14AN06LA0_F085 | N | 60 | Single | 0.0116 | 0.0146 | 25 | 50 | 125 | 1.2 | TO-252 (DPAK) |
| FDD24AN06LA0_F085 | N | 60 | Single | 0.019 | 0.024 | 16 | 40 | 75 | 2 | TO-252 (DPAK) |
| FDD5810_F085 | N | 60 | Single | 0.022 | 0.027 | 13 | 37 | 72 | 2.1 | TO-252 (DPAK) |
| FDC5661N_F085 | N | 60 | Single | 0.047 | 0.06 | 14.5 @ 10V | 4.3 | 1.6 | 30 | SSOT-6 |

| Product Number (60V Standard Gate) | Polarity | $BV_{DSS}$ Min. (V) | Configuration | $R_{DS(ON)}$ Max. (Ω) @ $V_{GS}$ = | | Qg Typ. (nC) @ $V_{GS}$ = 10V | $I_D$ (A) | $P_D$ (W) | $R_{\Theta JC}$ (°C/W) | Package |
|---|---|---|---|---|---|---|---|---|---|---|
| | | | | 10V | 6V | | | | | |
| FDB035AN06A0_F085 | N | 60 | Single | 0.0035 | 0.0066 | 95 | 80 | 310 | 0.48 | TO-263 (D2PAK) |
| FDP035AN06A0_F085 | N | 60 | Single | 0.0035 | 0.0066 | 95 | 80 | 310 | 0.48 | TO-220 |
| FDB070AN06A0_F085 | N | 60 | Single | 0.007 | - | 51 | 80 | 175 | 0.86 | TO-263 (D2PAK) |
| FDD10AN06A0_F085 | N | 60 | Single | 0.0105 | 0.027 | 28 | 50 | 135 | 1.11 | TO-252 (DPAK) |
| FDD13AN06A0_F085 | N | 60 | Single | 0.0135 | 0.034 | 22 | 50 | 115 | 1.3 | TO-252 (DPAK) |
| FDD20AN06A0_F085 | N | 60 | Single | 0.02 | - | 15 | 45 | 90 | 1.67 | TO-252 (DPAK) |
| FDD26AN06A0_F085 | N | 60 | Single | 0.026 | - | 17 | 36 | 75 | 2 | TO-252 (DPAK) |

| Product Number (75V to 100V) | Polarity | $BV_{DSS}$ Min. (V) | Configuration | $R_{DS(ON)}$ Max. (Ω) @ $V_{GS}$ = | | Qg Typ. (nC) @ $V_{GS}$ = 10V | $I_D$ (A) | $P_D$ (W) | $R_{\Theta JC}$ (°C/W) | Package |
|---|---|---|---|---|---|---|---|---|---|---|
| | | | | 10V | 6V | | | | | |
| FDB045AN08A0_F085 | N | 75 | Single | 0.0045 | 0.0084 @ 4.5V | 92 | 90 | 310 | 0.48 | TO-263 (D2PAK) |
| FDD16AN08A0_F085 | N | 75 | Single | 0.016 | 0.029 | 31 | 50 | 135 | 1.11 | TO-252 (DPAK) |
| FDB3652_F085 | N | 100 | Single | 0.016 | 0.026 | 41 | 61 | 150 | 1 | TO-263 (D2PAK) |
| FDB3672_F085 | N | 100 | Single | 0.028 | 0.047 | 31 | 44 | 120 | 1.25 | TO-263 (D2PAK) |
| FDD3672_F085 | N | 100 | Single | 0.028 | 0.047 | 24 | 44 | 144 | 1.04 | TO-252 (DPAK) |
| FDD3682_F085 | N | 100 | Single | 0.036 | 0.06 | 18.5 | 32 | 95 | 1.58 | TO-252 (DPAK) |

| Product Number (150V to 250V) | Polarity | $BV_{DSS}$ Min. (V) | Configuration | $R_{DS(ON)}$ Max. (Ω) @ $V_{GS}$ = | | Qg Typ. (nC) @ $V_{GS}$ = 10V | $I_D$ (A) | $P_D$ (W) | $R_{\Theta JC}$ (°C/W) | Package |
|---|---|---|---|---|---|---|---|---|---|---|
| | | | | 10V | 6V | | | | | |
| FDB2532_F085 | N | 150 | Single | 0.016 | 0.024 | 82 | 79 | 310 | 0.48 | TO-263 (D2PAK) |
| FDP42AN15A0_F085 | N | 150 | Single | 0.042 | 0.06 | 30 | 35 | 150 | 1 | TO-220 3-LEAD |
| FDD2572_F085 | N | 150 | Single | 0.054 | 0.075 | 26 | 29 | 135 | 1.11 | TO-252 (DPAK) |
| FDD120AN15A0_F085 | N | 150 | Single | 0.12 | 0.17 | 11.2 | 14 | 65 | 2.31 | TO-252 (DPAK) |
| FDS2672_F085 | N | 200 | Single | 0.07 | 0.08 | 33 | 3.9 | 2.5 | 25 | SO-8 |
| FDP2710_F085 | N | 250 | Single | 0.047 | - | 78 | 50 | 403 | 0.31 | TO-220 3-LEAD |

## N-Channel MOSFETs (Planar)

| Product Number | Polarity | $BV_{DSS}$ Min. (V) | Configuration | $R_{DS(ON)}$ Max. (Ω) @ $V_{GS}$ = | | Qg Typ. (nC) @ $V_{GS}$ = 10V | $I_D$ (A) | $P_D$ (W) | $R_{\Theta JC}$ (°C/W) | Package |
|---|---|---|---|---|---|---|---|---|---|---|
| | | | | 10V | 4.5V | | | | | |
| **55V Standard Gate** | | | | | | | | | | |
| FDP5500_F085 | N | 55 | Single | 0.007 | - | 114 | 80 | 375 | 0.4 | TO-220 3-LEAD |
| FDH5500_F085 | N | 55 | Single | 0.007 | - | 118 | 75 | 375 | 0.4 | TO-247 3-LEAD |
| HUFA75344S3_F085 | N | 55 | Single | 0.008 | - | 90 | 75 | 285 | 0.52 | TO-262 (I2PAK) |
| HUFA75321D3ST_F085 | N | 55 | Single | 0.036 | - | 21 | 20 | 93 | 1.6 | TO-252 (DPAK) |
| HUFA75307T3ST | N | 55 | Single | 0.09 | - | 8.3 | 2.6 | 1.1 | 110 | SOT-223 4-LEAD |
| **60V Logic Level** | | | | | | | | | | |
| HUFA76429D3ST_F085[1] | N | 60 | Single | 0.023 | 0.029 | 46 | 20 | 110 | 1.36 | TO-252 (DPAK) |
| HUFA76419D3ST_F085[1] | N | 60 | Single | 0.037 | 0.043 | 23 | 20 | 75 | 2 | TO-252 (DPAK) |
| HUFA76413DK8T_F085[1] | N | 60 | Dual | 0.049 | 0.056 | 23 | 5.1 | 2.5 | 50 | SO-8 |
| HUFA76409D3ST_F085[1] | N | 60 | Single | 0.063 | 0.075 | 15 | 18 | 49 | 3.06 | TO-252 (DPAK) |
| HUFA76407DK8T_F085[1] | N | 60 | Dual | 0.09 | 0.11 | 11.2 | 3.5 | 2.5 | 50 | SO-8 |

# N-CHANNEL/INJECTOR/SOLENOID DRIVER/P-CHANNEL

## N-Channel MOSFETs (Planar)

| Product Number (100V) | Polarity | $BV_{DSS}$ Min. (V) | Configuration | $R_{DS(ON)}$ Max. (Ω) @ $V_{GS}$ = 10V | $R_{DS(ON)}$ Max. (Ω) @ $V_{GS}$ = 4.5V | Qg Typ. (nC) @ $V_{GS}$ = 10V | $I_D$ (A) | $P_D$ (W) | $R_{\Theta JC}$ (°C/W) | Package |
|---|---|---|---|---|---|---|---|---|---|---|
| HUFA76645S3ST_F085[1] | N | 100 | Single | 0.014 | 0.0155 | 127 | 75 | 310 | 0.48 | TO-263 (D2PAK) |
| HUFA75639S3ST_F085 | N | 100 | Single | 0.025 | - | 57 | 56 | 200 | 0.74 | TO-263 (D2PAK) |
| **Product Number (150V to 250V)** | **Polarity** | **$BV_{DSS}$ Min. (V)** | **Configuration** | **$R_{DS(ON)}$ Max. (Ω) @ $V_{GS}$ = 10V** | **$R_{DS(ON)}$ Max. (Ω) @ $V_{GS}$ = 5V** | **Qg Typ. (nC) @ $V_{GS}$ = 10V** | **$I_D$ (A)** | **$P_D$ (W)** | **$R_{\Theta JC}$ (°C/W)** | **Package** |
| HUFA75852G3_F085 | N | 150 | Single | 0.16 | - | 215 | 75 | 500 | 0.3 | TO-247 |
| FQD12N20LTM_F085[1] | N | 200 | Single | 0.28 | 0.32 | 16 @ 5V | 9 | 55 | 2.27 | TO-252 (DPAK) |
| FQD9N25TM_F085 | N | 250 | Single | 0.42 | - | 15.5 | 7.4 | 55 | 2.27 | TO-252 (DPAK) |
| FQI27N25TU_F085 | N | 250 | Single | 0.11 | - | 65 | 25.5 | 180 | 0.7 | TO-262 (I2PAK) |
| FQB27N25TU_F085 | N | 250 | Single | 0.11 | - | 65 | 25.5 | 180 | 0.7 | TO-263 (D2PAK) |
| **Product Number (330V to 600V)** | **Polarity** | **$BV_{DSS}$ Min. (V)** | **Configuration** | **$R_{DS(ON)}$ Max. (Ω) @ $V_{GS}$ = 10V** | **$R_{DS(ON)}$ Max. (Ω) @ $V_{GS}$ = 5V** | **Qg Typ. (nC) @ $V_{GS}$ = 10V** | **$I_D$ (A)** | **$P_D$ (W)** | **$R_{\Theta JC}$ (°C/W)** | **Package** |
| FQB25N33TM_F085 | N | 330 | Single | 0.23 | - | 58 @ 15V | 25 | 250 | 0.5 | TO-263 (D2PAK) |
| FDD6N50TM_F085 | N | 500 | Single | 0.9 | - | 12.8 | 6 | 89 | 1.4 | TO-252 (DPAK) |
| FCB20N60_F085 | N | 600 | Single | 0.19 | - | 75 | 20 | 208 | 0.6 | TO-263 (D2PAK) |
| FCP20N60_F085 | N | 600 | Single | 0.19 | - | 75 | 20 | 208 | 0.6 | TO-220 3-LEAD |
| FCB20N60F_F085[2] | N | 600 | Single | 0.19 | - | 75 | 20 | 208 | 0.6 | TO-263 (D2PAK) |
| FCP20N60F_F085[2] | N | 600 | Single | 0.19 | - | 75 | 20 | 208 | 0.6 | TO-220 3-LEAD |
| FCH47N60_F085 | N | 600 | Single | 0.07 | - | 210 | 47 | 417 | 0.3 | TO-247 |
| FCH47N60F_F085[2] | N | 600 | Single | 0.073 | - | 210 | 47 | 417 | 0.3 | TO-247 |

*[1] Logic Level*

*[2] Fast Recovery Type*

## Injector/Solenoid Driver

| Product Number | Polarity | Gate Input | $BV_{DSS}$ Min. (V) | Configuration | $R_{DS(ON)}$ Max. (Ω) @ $V_{GS}$ = 10V | $R_{DS(ON)}$ Max. (Ω) @ $V_{GS}$ = 4.5V | Qg Typ. (nC) @ $V_{GS}$ = 10V | $t_r$ Typ. (µs) | $t_f$ Typ. (µs) | $I_D$ (A) | $P_D$ (W) | Special Features | $R_{\Theta JC}$ (°C/W) | Package |
|---|---|---|---|---|---|---|---|---|---|---|---|---|---|---|
| FDSS2407 | N | Logic Level | 62 | Dual | 0.11 | 0.132 | 4.3 | 1.2 | 3.5 | 3.3 | 2.27 | Gate Disable, $V_{DS}$ Feedback | 55 | SO-8 |

*Injector Solenoid Driver: FDSS2407*

## P-Channel MOSFETs (Trench)

| Product Number (-20V) | Polarity | $BV_{DSS}$ Min. (V) | Configuration | $R_{DS(ON)}$ Max. (Ω) @ $V_{GS}$ = 10V | $R_{DS(ON)}$ Max. (Ω) @ $V_{GS}$ = 2.7V | Qg Typ. (nC) @ $V_{GS}$ = 4.5V | $I_D$ (A) | $P_D$ (W) | $R_{\Theta JC}$ (°C/W) | Package |
|---|---|---|---|---|---|---|---|---|---|---|
| FDC642P_F085 | P | -20 | Single | 0.065 | 0.1 | 6.9 | 4 | 1.6 | 30 | SSOT-6 |
| FDS9431A_F085 | P | -20 | Single | 0.13 | 0.18 | 6 | 3.5 | 2.5 | 25 | SO-8 |
| FDS4465_F085 | P | -20 | Single | 0.0085 | 0.0105 | 86 | 13.5 | 2.5 | 25 | SO-8 |

## P-Channel MOSFETs (Trench)

| Product Number (-30V to -60V) | Polarity | $BV_{DSS}$ Min. (V) | Configuration | $R_{DS(ON)}$ Max. (Ω) @ $V_{GS}$ = 10V | $R_{DS(ON)}$ Max. (Ω) @ $V_{GS}$ = 4.5V | Qg Typ. (nC) @ $V_{GS}$ = 5V | $I_D$ (A) | $P_D$ (W) | $R_{\Theta JC}$ (°C/W) | Package |
|---|---|---|---|---|---|---|---|---|---|---|
| FDS6673BZ_F085[1] | P | -30 | Single | 0.012 | 0.078 | 46 | 14.5 | | 25 | SO-8 |
| FDS4435BZ_F085[1] | P | -30 | Single | 0.02 | 0.035 | 16 | 8.8 | 2.5 | 25 | SO-8 |
| FDD6637_F085[2] | P | -35 | Single | 0.0116 | 0.018 | 25 | 55 | 2.4 | 2.2 | TO-252 (DPAK) |
| FDD4243_F085 | P | -40 | Single | 0.044 | 0.064 | 21[3] | 6.7 | 68 | 3 | TO-252 (DPAK) |
| FDD4685_F085 | P | -40 | Single | 0.027 | 0.035 | 19 | 32 | 42 | 1.8 | TO-252 (DPAK) |
| FDS4675_F085 | P | -40 | Single | 0.013 | 0.017 | 40 | 11 | 83 | 25 | SO-8 |
| FDD4141_F085 | P | -40 | Single | 0.0123 | 0.018 | 19 | 50 | 2.4 | 1.8 | TO-252 (DPAK) |
| FDS4141_F085 | P | -40 | Single | 0.013 | 0.019 | 18.6 | 10.8 | 69 | 30 | SO-8 |
| FDS9958_F085 | P | -60 | Dual | 0.105 | 0.135 | 8 | 2.9 | 5 | 40 | SO-8 |

*[1] With Gate Protection Zeners ±25V $V_{GS}$ [2] With ±25V $V_{GS}$ [3] @ $V_{GS}$ = 10V*

## P-Channel MOSFETs (Planar)

| Product Number (–100V to -500V) | Polarity | $BV_{DSS}$ Min. (V) | Configuration | $R_{DS(ON)}$ Max. (Ω) @ $V_{GS}$ = 10V | $R_{DS(ON)}$ Max. (Ω) @ $V_{GS}$ = 4.5V | Qg Typ. (nC) @ $V_{GS}$ = 10V | $I_D$ (A) | $P_D$ (W) | $R_{\Theta JC}$ (°C/W) | Package |
|---|---|---|---|---|---|---|---|---|---|---|
| FQB34P10TM_F085 | P | -100 | Single | 0.06 | - | 110 | 33.5 | 155 | 0.97 | TO-263 (D2PAK) |
| FQD12P10TM_F085 | P | -100 | Single | 0.29 | - | 27 | 9.4 | 50 | 2.5 | TO-252 (DPAK) |
| FQB22P10TM_F085 | P | -100 | Single | 0.125 | - | 50 | 22 | 125 | 1.2 | TO-263 (D2PAK) |
| FQD8P10TM_F085 | P | -100 | Single | 0.53 | - | 12 | 6.6 | 44 | 2.84 | TO-252 (DPAK) |
| FQB7P20TM_F085 | P | -200 | Single | 0.69 | - | 25 | 19 | 90 | 1.39 | TO-263 (D2PAK) |

## N/P-Channel Complementary Pair MOSFETs (Trench)

| Product Number (20V to 60V) | Polarity | $BV_{DSS}$ Min. (V) | Configuration | $R_{DS(ON)}$ Max. (Ω) @ $V_{GS}$ = 10V | $R_{DS(ON)}$ Max. (Ω) @ $V_{GS}$ = 4.5V | Qg Typ. (nC) @ $V_{GS}$ = | $I_D$ (A) | $P_D$ (W) | $R_{\Theta JC}$ (°C/W) | Package (Fig.) |
|---|---|---|---|---|---|---|---|---|---|---|
| FDG6332C_F085 | NP | 20 | Comp | - | 0.3/0.42 | 1.1/1.4 @ $V_{GS}$ = 4.5V | 0.7/-0.6 | 0.3 | 415 | SC70 (1) |
| FDS8958A_F085 | NP | 30 | Comp | 0.028/0.052 | 0.04/.08 | 16 @ $V_{GS}$ = 10V | 7/-5 | 2 | 40 | SO-8 (2) |
| FDD8424H_F085A | NP | 40 | Comp | 0.024/0.054 | 0.03/0.07 | 14/17 @ $V_{GS}$ = 10V | 26/-20 | 30/35 | 4.1/3.5 | TO-252 (DPAK-4L) (3) |
| FDS4559_F085 | NP | 60 | Comp | 0.042/0.082 | 0.055/0.105 | 12/15 @ $V_{GS}$ = 10V | 4.5/-3.5 | 2 | 40 | SO-8 (2) |

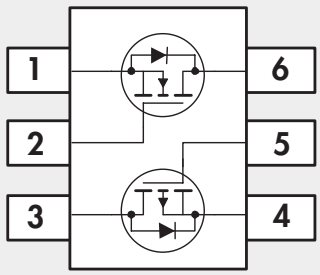


*Fig 1. Dual N/P SC70*

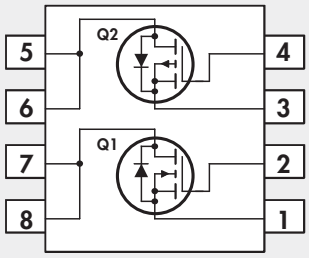


*Fig 2. Dual N/P SO8*

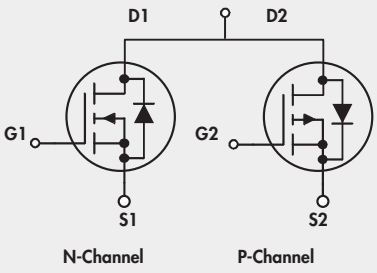


*Fig 3. Dual N/P TO 252/4L*

## IGBTs

| Product Number | $BV_{DSS}$ Min. (V) | $I_C$ @ 25°C (A) | $V_{CE(sat)}$ Max. (V) Max. (V) | $V_{CE(sat)}$ Max. (V) Test Condition @ 25°C | $t_f$ @ 25°C Typ. (ns) | Built-in Diode | $P_D$ (W) | $R_{\Theta JC}$ (°C/W) | Package |
|---|---|---|---|---|---|---|---|---|---|
| FGD3N60LSD | 600 | 19 | 1.5 | 3A, 10V | 800 | Yes | 40 | 3.1 | TO-252 (DPAK) |

# IGNITION IGBTs/CURRENT SENSING IGNITION IGBTs

## Ignition IGBTs

| Product Number | $I_C$ @ 110°C (A) | $V_{CE(sat)}$ Max. (V) | | $t_f$ Typ. (ns) | Clamp Voltage | | SCIS Energy (Max) (mJ) | Package |
|---|---|---|---|---|---|---|---|---|
| | | Max. (V) | Test Condition @ 25°C | | Typ. (V) | Test Condition @ -40°C to 150°C | | |
| ISL9V2040D3S | 10 | 1.45 | 6A, 4.5V | 2360 | 400 | $I_C$ = 2mA, R = 1k, $V_{GE = 0V}$ | 200 | TO-252 (DPAK) |
| ISL9V2040S3S | 10 | 1.45 | 6A, 4.5V | 2360 | 400 | $I_C$ = 2mA, R = 1k, $V_{GE = 0V}$ | 200 | TO-263 (D2PAK) |
| ISL9V2040P3 | 10 | 1.45 | 6A, 4.5V | 2360 | 400 | $I_C$ = 2mA, R = 1k, $V_{GE = 0V}$ | 200 | TO-220 3-LEAD |
| ISL9V2540S3ST | 10 | 1.45 | 6A, 4.5V | 2360 | 400 | $I_C$ = 2mA, R = 1k, $V_{GE = 0V}$ | 250 | TO-263 (D2PAK) |
| ISL9V3036D3S | 17 | 1.6 | 6A, 4V | 2800 | 360 | $I_C$ = 2mA, R = 1k, $V_{GE = 0V}$ | 300 | TO-263 (D2PAK) |
| ISL9V2040D3S | 17 | 1.6 | 6A, 4V | 2800 | 360 | $I_C$ = 2mA, R = 1k, $V_{GE = 0V}$ | 300 | TO-263 (D2PAK) |
| ISL9V3036P3 | 17 | 1.6 | 6A, 4V | 2800 | 360 | $I_C$ = 2mA, R = 1k, $V_{GE = 0V}$ | 300 | TO-263 (D2PAK) |
| ISL9V3040D3S | 17 | 1.6 | 6A, 4V | 2800 | 400 | $I_C$ = 2mA, R = 1k, $V_{GE = 0V}$ | 300 | TO-252 (DPAK) |
| ISL9V3040S3S | 17 | 1.6 | 6A, 4V | 2800 | 400 | $I_C$ = 2mA, R = 1k, $V_{GE = 0V}$ | 300 | TO-263 (D2PAK) |
| ISL9V3040P3 | 17 | 1.6 | 6A, 4V | 2800 | 400 | $I_C$ = 2mA, R = 1k, $V_{GE = 0V}$ | 300 | TO-220 3-LEAD |
| FGD3040G2_F085[1] | 23.2 | 1.15 | 6A, 4V | 2000 | 400 | $I_C$ = 2mA, R = 1k, $V_{GE = 0V}$ | 300 | TO-252 (DPAK) |
| FGB3236_F085 | 27 | 1.6 | 6A, 4V | 2600 | 360 | $I_C$ = 2mA, R = 1k, $V_{GE = 0V}$ | 320 | TO-263 (D2PAK) |
| FGI3236_F085 | 27 | 1.6 | 6A, 4V | 2600 | 360 | $I_C$ = 2mA, R = 1k, $V_{GE = 0V}$ | 320 | TO262 (I2PAK) |
| FGD3440G2_F085[1] | 25 | 1.1 | 6A, 4V | 2300 | 400 | $I_C$ = 2mA, R = 1k, $V_{GE = 0V}$ | 335 | TO-252 (DPAK) |
| ISL9V5036S3S | 31 | 1.6 | 6A, 4V | 2800 | 360 | $I_C$ = 2mA, R = 1k, $V_{GE = 0V}$ | 500 | TO-263 (D2PAK) |
| ISL9V5036P3_F085 | 31 | 1.6 | 6A, 4V | 2800 | 360 | $I_C$ = 2mA, R = 1k, $V_{GE = 0V}$ | 500 | TO-220 3-LEAD |
| ISL9V5045S3ST | 43 | 1.6 | 6A, 4V | 2800 | 450 | $I_C$ = 2mA, R = 1k, $V_{GE = 0V}$ | 500 | TO-262 (D2PAK) |

*[1] EcoSPARK® 2 Ignition IGBT*

## Current Sensing Ignition IGBTs

| Product Number | $I_C$ @ 110°C (A) | $V_{CE(sat)}$ Max. (V) | | $t_f$ Typ. (ns) | Clamp Voltage | | Current Sense Ratio | SCIS Energy (Max.) (mJ) | Package |
|---|---|---|---|---|---|---|---|---|---|
| | | Max. (V) | Test Condition @ 25°C | | Typ.(V) | Test Condition @ -40°C to 150°C | | | |
| FGB3040CS | 19 | 1.3 | 6A, 4V | 2600 | 4100 | $I_C$ = 2mA, R = 1k, $V_{GE = 0V}$ | 200:1 | 300 | TO263-6 |

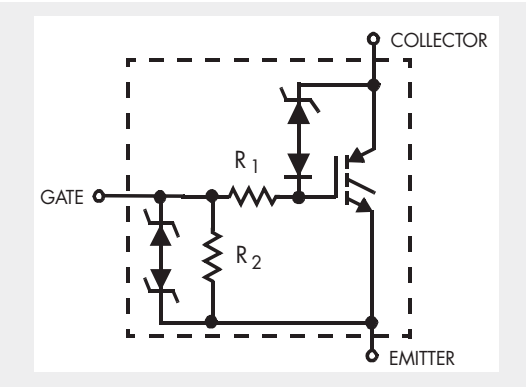


*Ignition IGBT Internal Structure*

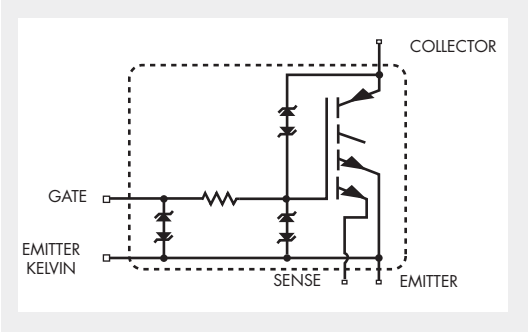


*N-Channel Current Sensing Ignition IGBT FGB3040CS*

## Ultrafast Rectifiers

| Product Number | Configuration | $V_{RRM}$ (V) | $I_{F(av)}$ (A) | $I_{FSM}$ (A) | $V_F$ Max. @150°C (V) | Softness Factor (ta/tb) | $t_{rr}$ Max. (nS) | $I_R$ Max. @ 25°C (µA) | $R_{\theta JC}$ (°C/W) | Package |
|---|---|---|---|---|---|---|---|---|---|---|
| FFB20UP20DN_F085 | Dual, Common Cathode | 200 | 10 | 100 | 1 | 3.5 | 27 | 10 | 3.5 | TO-263 (D2PAK) |
| RURD620CCS9A_F085 | Dual, Common Cathode | 200 | 6 | 60 | 0.83 | 2 | 30 | 100 | 3.5 | TO-252 (DPAK) |
| RURD660S9A_F085[1] | Single | 600 | 6 | 60 | 1.2 | 1.75 | 55 | 100 | 3 | TO-252 (DPAK) |
| RURD4120S9A_F085 | Single | 1200 | 4 | 40 | 1.9 | 1.43 | 70 | 100 | 3 | TO-252 (DPAK) |

[1] *Contact Fairchild for Availability*

## Hyperfast Rectifiers

| Product Number | Configuration | $V_{RRM}$ (V) | $I_{F(av)}$ (A) | $I_{FSM}$ (A) | $V_F$ Max. @150°C (V) | Softness Factor (ta/tb) | $t_{rr}$ Max. (nS) | $I_R$ Max. @ 25°C (µA) | $R_{\theta JC}$ (°C/W) | Package |
|---|---|---|---|---|---|---|---|---|---|---|
| RHRD660S9A_F085 | Single | 600 | 6 | 60 | 1.7 | 1.88 | 30 | 100 | 3 | TO-252 (DPAK) |
| RHRP860_F085 | Single | 600 | 8 | 100 | 1.9 | 1.8 | 30 | 100 | 2 | TO-220AC |

## Stealth™ Rectifiers - Soft Recovery

| Product Number | Configuration | $V_{RRM}$ (V) | $I_{F(av)}$ (A) | $I_{FSM}$ (A) | $V_F$ Max. @150°C (V) | Softness Factor (ta/tb) | $t_{rr}$ Max. (nS) | $I_R$ Max. @ 25°C (µA) | $R_{\theta JC}$ (°C/W) | Package |
|---|---|---|---|---|---|---|---|---|---|---|
| FFD08S60S_F085 | Single | 600 | 8 | 80 | 1.6 | 0.6 | 30 | 100 | 3 | TO-252 (DPAK) |

### High-Voltage (HVIC) Gate Drivers

Fairchild's High-Voltage Gate Drivers (HVICs) are designed for DC and multiphase motor drive, DC-DC converter, inverter, high side load switch, Piezo-Injector and other applications. They are fully AEC-Q100 compliant, and feature high noise immunity, low power consumption, undervoltage lockout and a wide operating temperature range of -40°C to +125°C.

## HVIC High-Side Drivers

| Product Number | Floating Offset Voltage (Max.) (V) | Reset Input | Recharge | Supply Voltage (Min.) (V) | Supply Voltage (Max.) (V) | $t_{ON}/t_{OFF}$ typ. (nS) | $t_r/t_f$ typ. (nS) | Pulsed Output Current (mA) | Package |
|---|---|---|---|---|---|---|---|---|---|
| FAN7171_F085 | 600 | No | Bootstrap | 10 | 20 | 150/150 | 25/15 | 4000/4000 | SO-8 |
| FAN7081_GF085 | 600 | No | Bootstrap | 10 | 20 | 130/140 | 15/10 | 250/500 | SO-8 |
| FAN7083_GF085 | 600 | Yes | Bootstrap | 10 | 20 | 115/90 | 200/25 | 200/400 | SO-8 |
| FAN7085_GF085 | 300 | No | Bootstrap with Internal Current Path | 4.5 | 20 | 560/150 | 65/25 | 450/450 | SO-8 |

## HVIC Half-Bridge (High- and Low-Side)

| Product Number | Floating Offset Voltage (Max.) (V) | Reset Input | Recharge | Supply Voltage (Min.) (V) | Supply Voltage (Max.) (V) | Deadtime | $t_{ON}/t_{OFF}$ (nS) | $t_R/t_F$ (nS) | Pulsed Output Current (mA) | Package |
|---|---|---|---|---|---|---|---|---|---|---|
| FAN7080_GF085 | 600 | No | Bootstrap | 5.5 | 20 | Adjustable 650-2100 | 750/130 | 40/25 | 300/600 | SO-8 |
| FAN7190_F085 | 600 | No | Bootstrap | 10 | 22 | N/A | 140/140 | 25/20 | 4500/4500 | SO-8 |

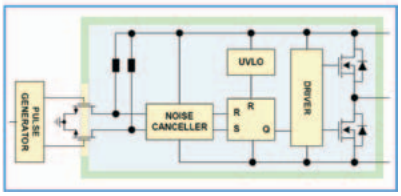


HVIC High-Side Isolation

# HIGH-SPEED, LOW-SIDE, GATE DRIVERS

## Low-Side Gate Drivers

Fairchild's line of high-speed, low-side gate drivers provide high peak currents of several amps that are needed to switch Power MOSFETs efficiently. These provide internal power-up protection, high noise immunity and appropriate power dissipation for 125°C operation.

Input level flexibility is provided with versions for both CMOS, TTL and external threshold levels. Output performance is optimized by a proprietary compound MillerDrive™ architecture for strong gate drive current and low voltage drop. Industry standard pinouts allow easy migration to Fairchild's MillerDrive for improved design performance.

Additionally, the outputs are held low if no input signal is present for fail-safe operation. The low well-matched propagation delay, low quiescent current, fail-safe input and under voltage lockout features provide for fail-safe design with minimal component count. Fairchild's automotive gate drivers are all AEC-Q100 qualified and operate over a –40 to 125°C ambient temperature range.

*SOIC-8*

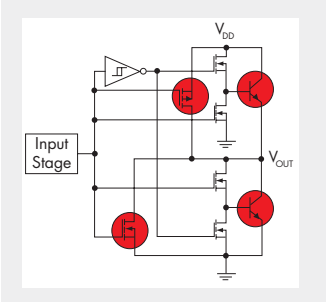


*MillerDrive™ Output Architecture*

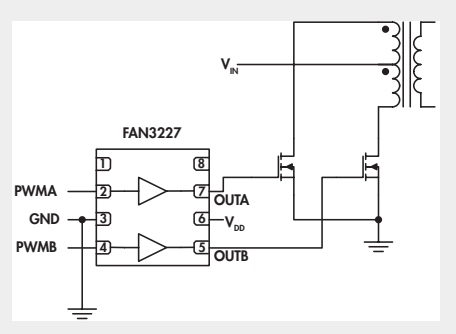


### Low-Side Gate Drivers

| Product Number | $V_{DD}$ Range (V) | Max. $V_{IO}$ to GND (V) | Enable Pin | Input | Input Thresholds | Number of Channels | Pulsed Output Current (mA) | Output Propagation Delay (ns) | Propagation Delay Matching (ns) | No. of GND Pins | Package |
|---|---|---|---|---|---|---|---|---|---|---|---|
| FAN3216TMX_F085<br>FAN3216CMX_F085 | 4.5-18.0 | 20 | No | Single Input Inverting | TTL CMOS | 2 | 2000 | 20 | < 2 | 1 | SO-8 |
| FAN3226TMX_F085<br>FAN3226CMX_F085 | 4.5-18.0 | 20 | Yes | Single Input Inverting | TTL CMOS | 2 | 2000 | 20 | < 2 | 1 | SO-8 |
| FAN3217TMX_F085<br>FAN3217CMX_F085 | 4.5-18.0 | 20 | No | Single Input Non-Inverting | TTL CMOS | 2 | 2000 | 20 | < 2 | 1 | SO-8 |
| FAN3227TMX_F085<br>FAN3227CMX_F085 | 4.5-18.0 | 20 | Yes | Single Input Non-Inverting | TTL CMOS | 2 | 2000 | 20 | < 2 | 1 | SO-8 |
| FAN3228TMX_F085<br>FAN3228CMX_F085 | 4.5-18.0 | 20 | No | Dual Input Inverting & Non Inverting | TTL CMOS | 2 | 2000 | 20 | < 2 | 1 | SO-8 |
| FAN3229TMX_F085<br>FAN3229CMX_F085 | 4.5-18.0 | 20 | Yes | Dual Input Inverting & Non Inverting | TTL CMOS | 2 | 2000 | 20 | < 2 | 1 | SO-8 |
| FAN3213TMX_F085<br>FAN3213CMX_F085 | 4.5-18.0 | 20 | No | Single Input Inverting | TTL CMOS | 2 | 4000 | 20 | < 2 | 1 | SO-8 |
| FAN3223TMX_F085<br>FAN3223CMX_F085 | 4.5-18.0 | 20 | Yes | Single Input Inverting | TTL CMOS | 2 | 4000 | 20 | < 2 | 1 | SO-8 |
| FAN3214TMX_F085<br>FAN3214CMX_F085 | 4.5-18.0 | 20 | No | Single Input Non-Inverting | TTL CMOS | 2 | 4000 | 20 | < 2 | 1 | SO-8 |
| FAN3224TMX_F085<br>FAN3224CMX_F085 | 4.5-18.0 | 20 | Yes | Single Input Non-Inverting | TTL CMOS | 2 | 4000 | 20 | < 2 | 1 | SO-8 |
| FAN3225TMX_F085<br>FAN3225CMX_F085 | 4.5-18.0 | 20 | No | Dual Input Inverting & Non Inverting | TTL CMOS | 2 | 4000 | 20 | < 2 | 1 | SO-8 |
| FAN3121TMX_F085<br>FAN3121CMX_F085 | 4.5-18.0 | 20 | Yes | Single Input Inverting | TTL CMOS | 1 | 9000 | 20 | < 2 | 2 | SO-8 |
| FAN3122TMX_F085<br>FAN3122CMX_F085 | 4.5-18.0 | 20 | Yes | Single Input Non-Inverting | TTL CMOS | 1 | 9000 | 20 | < 2 | 2 | SO-8 |

## FDBS09H04 and FDDS10H04 Smart High-Side Switches

The FDBS09H04 and FDDS10H04 devices provide ratiometric current monitoring of loads by a CPU, allowing the diagnostic thresholds to be application specific. They can be used with PWM of lighting loads for smart load management. The internal reverse battery protection scheme allows for direct drive of loads which can operate under reverse battery without damage. They also can be used to drive inductive loads, with robust EAS ratings.

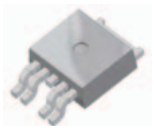

TO252-5L

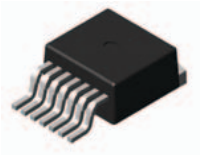

TO263-7L

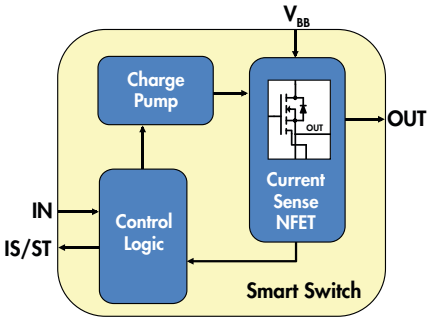


## FDDS100H06 Smart High-Side Switch

The FDDS100H06 has fixed diagnostic limits for open and short circuit. The interface is directly compatible with microprocessor logic. It also is compatible with PWM lighting applications and inductive loads.

### Smart High-Side Switches

| Product Number | $V_{BB}$ (V) | Output Clamp Typ. (V) | $R_{DS(ON)}$ @ $V_{BB}$ = 12V $T_J$ = 25°C Max. (mΩ) | $I_D$ Max. (A) | $E_{AS}$ @ $T_J$ = 150°C (mJ) | $t_{ON}$ Typ. (µs) | $t_{OFF}$ Typ. (µs) | Protection Features | Current Sense Ratio ($K_{ILIS}$) | Current Limit @ $T_J$ = 25°C Typ. (A) | $P_D$ (W) | $R_{\Theta JC}$ (°C/W) | Package |
|---|---|---|---|---|---|---|---|---|---|---|---|---|---|
| FDBS09H04A_F085A | 5.5 to 38 | 42 | 9 | 48 | 300 | 180 | 150 | OLP, UVLO, Load-Dump, Reverse Battery | 13200 | 85 @ 12V | 81 | 0.8 | TO-263-7L |
| FDDS10H04A_F085A | 5.5 to 38 | 42 | 10 | 41 | 288 | 160 | 110 | OLP, UVLO, Load-Dump, Reverse Battery | 11000 | 70 @ 12V | 59 | 1 | TO-252-5L |
| FDDS100H06_F085[1] | 5.5 to 37 | 56.5 | 100 | 4 | 425 | 70 | 66 | OLP, UVLO, Load-Dump, Reverse Battery | NA | 12 @ 12V | 41.6 | 3 | TO-252-5L |

[1] *Logic Level Interface*

## High-Current Half Bridge

The FAN7093 is capable of PWM above audio frequencies for EMC compatibility. It can be used alone to drive high current motors such as pumps and cooling fans. The devices can be paired for full-bridge capability, for applications such as reversible cooling fans.

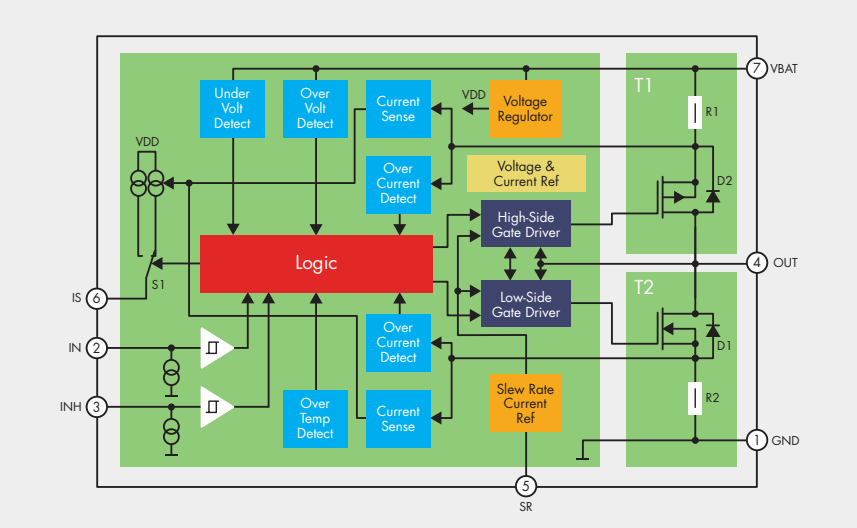


### High-Current Bridge

| Product Number | $V_{BB}$ (V) | $R_{DS(ON)}$ @ $V_{BB}$ = 14V -40<$T_J$<150°C Max. (mΩ) | | $I_D$ Max (A) | Slew Rate Min to Max. (V/µs) | $t_{ON}$ Typ. (µs) | $t_{OFF}$ Typ. (µs) | Protection Features | Current Sense Ratio ($K_{ILIS}$) | $R_{\Theta JC}$ (°K/W) | Package |
|---|---|---|---|---|---|---|---|---|---|---|---|
| | | High Side | Low Side | | | | | | | | |
| FAN7093_F085 | 5.0 to 28 | 12.3 | 18.2 | ±46 | 1 to 20 | 2.1 | 2.1 | OTP, OLP, UVLO, Load-Dump, Peak Current Limit | 8500 | 0.8 | TO-263-7L |

## Automotive Power Modules

Fairchild provides standard and customized Automotive Power Modules for applications such as brushless DC motor control in Electrical Power Steering (EPS) and Electrohydraulic Power Steering (EHPS), transmission control, HVAC and DC-DC converters and solid state switches for voltage levels between 12V and 600V and current levels up to and beyond 160A.

## Design Advantages Include:

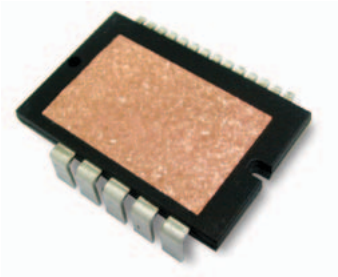

- 3-phase inverter, H-bridge, solid state switch and other configurations
- Active components
  – MOSFETs, IGBTs, diodes
- Integrated passive and active components (optional)
  – 1% tolerance DC bus current sensing
  – NTC thermistor for temperature feedback
  – Built-in gate drivers
- High current capability
- Easy and effective thermal interface with exposed and electrically isolated substrate
- Low total electrical resistance
- Low parasitic inductance, low EMI
- Compact size
- Quick and easy installation
- Interconnection with terminals by screws, soldering or welding

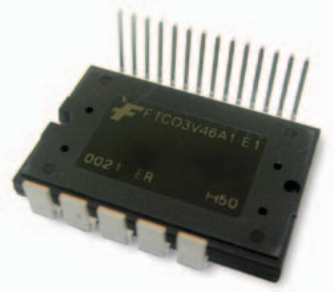

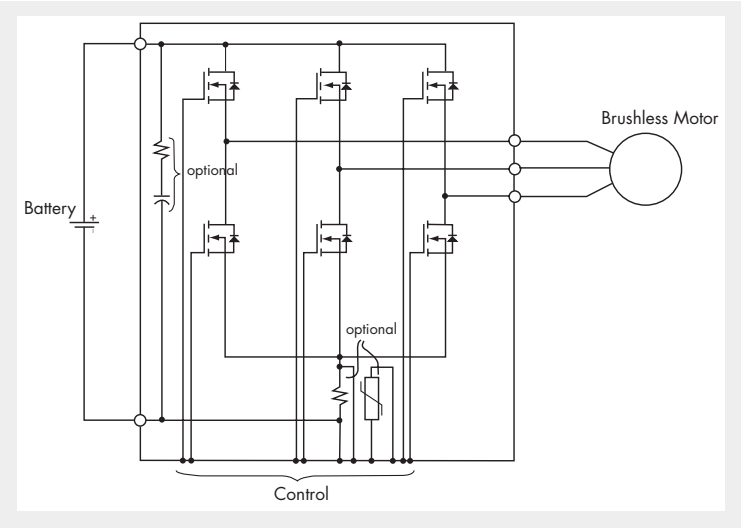

*Electric Power Steering (EPS) Module Schematic*

*Note: All materials present in the power module meet UL flammability rating class 94V-0 or higher. 100% Pb free.*

FAIRCHILD SEMICONDUCTOR®

FOR A COMPLETE LISTING OF SALES REPRESENTATIVES AND SALES OFFICES, VISIT:
**www.fairchildsemi.com/cf/sales_contacts**

FOR INFORMATION ON FAIRCHILD PRODUCTS, TRADESHOWS, SEMINARS AND OTHER ITEMS, REGISTER HERE:
**www.fairchildsemi.com/my_fairchild**

For datasheets, application notes, samples and more, please visit: **www.fairchildsemi.com**

PRODUCTS | APPLICATIONS | DESIGN SUPPORT | ABOUT FAIRCHILD

## POWER MANAGEMENT

**Advanced Load Switches**
- Advanced Current Limited Load Switches
- Slew Rate Controlled Load Switches

**Backlighting Unit (BLU)**
- CCFL Inverter ICs
- LED BLU Driver ICs

**Battery Management**
- Battery Charger ICs
- Current Sensing

**Diodes & Rectifiers**
- Bridge Rectifiers
- Diacs
- Rectifiers
- Schottky Diodes & Rectifiers
- Small Signal Diodes
- Transient Voltage Suppressors (TVS)
- Zener Diodes

**Ground Fault Interrupt (GFI) Controllers**
- Ground Fault Interrupt (GFI) Controllers

**IGBTs**
- Discrete IGBTs

**MOSFET and IGBT Gate Drivers**
- All Drivers
- 3-Phase Drivers
- Half-Bridge Drivers
- High-Side Drivers
- Low-Side Drivers
- Synchronous Rectifier Drivers

**MOSFETs**
- Discrete MOSFETs
- Integrated Load Switches
- MOSFET/Schottky Combos

**Motion Control**
- BLDC/PMSM Controller
- SPM® (Smart Power Modules)
- PFC SPM® (Smart Power Modules)

**Non-Isolated DC-DC**
- Charge-pump Converters
- DrMOS FET plus Driver Multi-Chip Modules
- Step-down Controllers (External Switch)
- Step-down Regulators, Non-Synchronous (Integrated Switch)
- Step-down Regulators, Synchronous (Integrated Switch)
- Step-up Regulators (Integrated Switch)

**Off-Line & Isolated DC-DC**
- AC-DC Linear Regulators
- Flyback & Forward PWM Controllers
- Flyback & Forward PWM Controllers with Integrated MOSFET
- LLC Resonant & Asymmetric Half Bridge PWM Controllers
- LLC Resonant & Asymmetric Half Bridge PWM Controllers with Integrated MOSFETs
- Primary-Side Regulation CV/CC Controllers
- Primary-Side Regulation CV/CC Controllers with Integrated MOSFET
- Standard PWM Controllers
- Supervisory/Monitor ICs

**Power Factor Correction**
- Continuous Conduction Mode (CCM) PFC Controllers
- Critical/Boundary Conduction Mode (CrCM/BCM) PFC Controllers
- Interleaved PFC Controllers
- PFC + PWM Combination (Combo) Controllers

**Transistors**
- BJTs
- Darlingtons
- Digital/Bias-Resistor Transistors
- JFETs
- RF Transistors
- Small Signal Transistors

**Voltage Regulators**
- LDOs
- Positive Voltage Linear Regulators
- Negative Voltage Linear Regulators
- Shunt Regulators
- Voltage Detector
- Voltage Stabilizer
- Voltage to Frequency Converter

## ANALOG & MIXED SIGNAL

**Amplifiers & Comparators**
- Comparators
- Operational Amplifiers

**Audio Amplifiers**
- Audio Subsystems
- Audio Headphone Amplifiers
- Audio Speaker Amplifiers
- Digital Microphone Amplifiers

**Battery Protection ICs**
- Battery Protection ICs

**Interface**
- LVDS
- Serializers/Deserializers (µSerDes™)
- USB Transceivers

**Signal Conditioning**
- Video Filter Drivers
- Video Switch Matrix/Multiplexers

**Signaling, Sensing & Timing**
- Signaling, Sensing & Timing
- Timing

**Switches**
- Accessory Switches
- Analog Switches
- Audio Jack Detection Switches
- Audio Switches
- Bus Switches
- MIPI Switches
- Multi-media Switches
- USB Switches
- Video Switches

## LOGIC

**Buffers, Drivers, Transceivers**
- Buffers
- Line Drivers
- Transceivers

**Flip Flops, Latches, Registers**
- Counters
- Flip Flops
- Inverters
- Latches
- Registers

**Gates**
- AND Gates
- Configurable Gates
- NAND Gates
- NOR Gates
- OR Gates
- Schmitt Triggers

**Multiplexer/Demultiplexer/Decoders**
- Decoders
- Demultiplexers
- Multiplexers
- Multivibrators

**Voltage Level Translators**
- Voltage Level Translators

## LIGHTING ICs
- Fluorescent Lamp ICs
- HID ICs
- LED Lighting ICs
- Portable LED Drivers

## OPTOELECTRONICS

**High Performance Optocouplers**
- High Speed Logic Gate
- High Performance Transistor
- Low Voltage, High Performance
- Specific Function

**IGBT/MOSFET Gate Drivers**
- IGBT/MOSFET Gate Drivers

**Infrared**
- Ambient Light Sensors
- Emitting Diodes
- Optical Interrupt Switches
- Photo Sensors
- Photo Sensor – Transistors
- Reflective Sensors

**Phototransistor Optocouplers**
- Isolated Error Amplifier
- Photo Darlington Output
- Phototransistor Output - DC Sensing Input
- Phototransistor Output - AC Sensing Input

**TRIAC Driver Optocouplers**
- Random Phase TRIAC Driver
- Zero Crossing TRIAC Driver

## AUTOMOTIVE PRODUCTS

**Automotive Discrete Power**
- Automotive Ignition IGBTs
- Automotive IGBTs
- Automotive N-Channel MOSFETs
- Automotive P-Channel MOSFETs
- Automotive Rectifiers

**Automotive Gate Drivers**
- High Voltage Gate Drivers (HVICs)
- Low Voltage Gate Drivers

**Automotive Smart Power Switches**
- Automotive Smart Power Switches

## CIRCUIT PROTECTION

**Reverse Polarity Protection**
- Blocking Diodes
- Reverse Bias Protection Switches
- Schottky diodes

**Transient Voltage Suppressors (TVS)**
- Mid Power TVS
- Power TVS (> 400W)

Trademarks, service marks, and registered trademarks are the property of Fairchild Semiconductor or their respective owners. For a listing of Fairchild Semiconductor trademarks and related information, please see: www.fairchildsemi.com/legal
Lit code: 980024-009 © 2012 Fairchild Semiconductor. All Rights Reserved.

**Solutions for Your Success™**

Мы молодая и активно развивающаяся компания в области поставок электронных компонентов. Мы поставляем электронные компоненты отечественного и импортного производства напрямую от производителей и с крупнейших складов мира.

Благодаря сотрудничеству с мировыми поставщиками мы осуществляем комплексные и плановые поставки широчайшего спектра электронных компонентов.

Собственная эффективная логистика и склад в обеспечивает надежную поставку продукции в точно указанные сроки по всей России.

Мы осуществляем техническую поддержку нашим клиентам и предпродажную проверку качества продукции. На все поставляемые продукты мы предоставляем гарантию .

Осуществляем поставки продукции под контролем ВП МО РФ на предприятия военно-промышленного комплекса России , а также работаем в рамках 275 ФЗ с открытием отдельных счетов в уполномоченном банке. Система менеджмента качества компании соответствует требованиям ГОСТ ISO 9001.

Минимальные сроки поставки, гибкие цены, неограниченный ассортимент и индивидуальный подход к клиентам являются основой для выстраивания долгосрочного и эффективного сотрудничества с предприятиями радиоэлектронной промышленности, предприятиями ВПК и научно-исследовательскими институтами России.

С нами вы становитесь еще успешнее!

**Наши контакты:**

**Телефон:** +7 812 627 14 35

**Электронная почта:** sales@st-electron.ru

**Адрес:** 198099, Санкт-Петербург, Промышленная ул, дом № 19, литера Н, помещение 100-Н Офис 331