# Tantalum Leaded Capacitors

www.kemet.com

F3100F 2/08

The Capacitance Company

KEMET

CHARGED.™

# INDEX


**Tantalum Hermetically Sealed/Axial Capacitors**

Military Ordering Information 4
Military Marking Information 4
Military Approval Levels 5
Performance Characteristics 5
T110/T212 (CSR13) MIL-PRF-39003/1 Series
Outline Drawing 6
Dimensions 6
Ordering & T110 Marking Information 6
Ratings and Part Number Reference 7-19
T111/T213 (CSR91) MIL-PRF-39003/4 Series
Outline Drawing 20
Dimensions 20
Ordering & T111 Marking Information 20
Ratings and Part Number Reference 20-23
T222 (CSR09) MIL-PRF-39003/2 Series
Outline Drawing 24
Dimensions 24
Ordering & Military Marking Information 24
Ratings and Part Number Reference 25-26
T140/T242 (CSR23) MIL-PRF-39003/3 Series
Outline Drawing 27
Dimensions 27
T140 Marking Information 27
Ratings and Part Number Reference 27-30
T252 (CSR33) MIL-PRF-39003/6 Series
Outline Drawing 31
Dimensions 31
Ordering Information 31
Ratings and Part Number Reference 32-33
T262 (CSR21) MIL-PRF-39003/9 Series
Outline Drawing 34
Dimensions 34
Ordering Information 34
Ratings and Part Number Reference 35-36
T216 (CSS13) & T256 (CSS33) MIL-PRF-39003/10 Series
Outline Drawing 37
Dimensions 37
Ordering Information 37
Military Ordering Information 38
Marking Information 38
Ratings and Part Number Reference 38-41

**Tantalum Molded Axial/Radial Capacitors**

T322/T323 (CX01 & CX05) MIL-PRF-49137/1 & 5 Series — Axial
Performance Characteristics 42
Outline Drawing 43
Dimensions 43
Ordering Information 43
Ratings and Part Number Reference 44-48
T330 & T340 Series — Radial
Performance Characteristics 49
T330 Outline Drawing 50
T330 Dimensions 50
T330 Ordering Information 50
T330 Marking Information 50
T330 Ratings and Part Number Reference 51-52
T340 Outline Drawing 53
T340 Dimensions 53
T340 Ordering Information 53
T340 Marking Information 54
T340 Ratings and Part Number Reference 55-57
T370/T378 (CX06) MIL-PRF-49137/6 Series — Radial
Performance Characteristics 58
Outline Drawing 59
Dimensions 59
Marking Information 59
Ordering Information 59
Ratings and Part Number Reference 60

**Tantalum Dipped Radial Capacitors**

Performance Characteristics 61
T35X Series
Outline Drawing 62
Dimensions 62
Lead Configuration 62
Ordering Information 63
Marking Information 63
Ratings and Part Number Reference 63-65
T363 (CX02) & T369 (CX12) MIL-PRF-49137/2 Series
Outline Drawing 66
Dimensions 66
Marking Information 66
Ordering Information 66
Ratings and Part Number Reference 67
T368 Series
Outline Drawing 68
Dimensions 68
Ratings and Part Number Reference 68
T396 & T398 Series
Outline Drawing 69
Dimensions 69
Ordering Information 69
Ratings and Part Number Reference 70

**Tantalum Axial Tape & Reel Packaging Information** 71
**Tantalum Radial Tape & Reel Packaging Information** 72
**Tantalum Leaded Packaging Quantities** 73-74
**Application Notes for Solid Tantalum Capacitors** 75-83



**IMPORTANT NOTICE**

KEMET Electronics Corporation disclaims all warranties, whether express, implied, or statutory as to any manner whatsoever, including the condition of the equipment, its compatibility with specific requirements, its merchantability, or fitness for any particular purpose which extend beyond the description on the face hereof.

Furthermore, under no circumstances shall KEMET Electronics Corporation be liable for consequential, special, incidental or indirect damages resulting from the use or handling of this product.

Finally, KEMET Electronics Corporation does not assume any responsibility for the correctness of the information contained in this catalog. All design characteristics, specifications, tolerances, and the like are subject to change without notice.

## ORDERING INFORMATION (OBSOLETE*)

**CSR XX B 565 K M**

**TYPE**
Capacitors, Fixed, Solid Electrolyte, Tantalum
Established Reliability

**STYLE**
Tubular Case — Always Sleeved

09 — Miniature — T222
13 — Standard — T212
21 — Standard, low ESR — T262
23 — Extended Range — T242
33 — Extended Range, Low Leakage — T252
91 — Non-Polar — T213

**VOLTAGE**

| Symbol | VDC Working 85°C | VDC Working 125°C | VDC Surge 85°C | VDC Surge 125°C |
|---|---|---|---|---|
| B | 6 | 4 | 8 | 5 |
| C | 10 | 7 | 13 | 9 |
| D | 15 | 10 | 20 | 12 |
| E | 20 | 13 | 26 | 16 |
| F | 35 | 23 | 46 | 28 |
| G | 50 | 33 | 65 | 40 |
| H | 75 | 50 | 98 | 64 |
| J | 100 | 67 | 130 | 86 |

**CAPACITANCE**
Expressed in picofarads (1 microfarad = 1,000,000 picofarads). First two digits represent significant figures. Last digit specifies the number of zeros to follow.

**Examples**
565 — 5,600,000 = 5.60 µF  563 — 56,000 = .056 µF
564 — 560,000 = .56 µF

**CAPACITANCE TOLERANCE**
J — ± 5%
K — ± 10%
M — ± 20%

**FAILURE RATE LEVEL IN % PER 1000 HOURS**

| GRADED | EXPONENTIAL |
|---|---|
| A — Not Applicable | M — 1%/k hrs. |
| B — 0.1%/k hrs. | P — 0.1%/k hrs. |
| C — 0.01%/k hrs. | R — 0.01%/k hrs. |
| D — 0.001%/k hrs. | S — 0.001%k hrs. |

*This Military Part Numbering System is obsolete in accordance with the current specifications. The correct current designation for a CSR part number is the MIL Specification Number, followed by the Specification (slash) Sheet Number and Dash Number (i.e. — MIL-PRF-39003/01-2270). However, the part number breakdown shown above is still widely used and is shown for reference.

## MILITARY CAPACITOR APPROVED FAILURE RATE LEVELS AND MARKINGS PER MIL-PRF-39003 FOR CSR09 (T222 A & B CASE SIZES ONLY), CSR13 (T212), CSR21 (T262), CSR23 (T242) & CSR33 (T252) CAPACITORS

### KEMET APPROVED FAILURE RATE LEVELS — MIL-PRF-39003/H (EXPONENTIAL)

| STYLE | DESCRIPTION | KEMET SERIES | APPROVED FAILURE RATE LEVEL |
|---|---|---|---|
| CSR09 | Polar-Subminiature | T222 | S (0.001%/k hrs.) |
| CSR13 | Polar-Standard MIL Range | T212 | S (0.001%/k hrs.) |
| CSR21 | Polar-Standard Low ESR MIL Range | T262 | S (0.001%/k hrs.) |
| CSR23 | Polar-Extended Range | T242 | S (0.001%/k hrs.) |

| STYLE | DESCRIPTION | KEMET SERIES | APPROVED FAILURE RATE LEVEL |
|---|---|---|---|
| CSR33 | Polar-Extended Range Low Leakage | T252 | S (0.001%/k hrs.) |
| CSR91 | Non-Polar | T213 | S (0.001%/k hrs.) |

### MILITARY MARKING

**A CASE**

| | |
|---|---|
| 39003 | Military specification number |
| 01 - K | Specification sheet number and trademark |
| 9002J | Military dash number and "J" for JAN |
| +333 | Polarity, date code (1st digit indicates year and the next two digits indicate the week) |
| XY | Lot symbol |

**C & D CASES**

| | |
|---|---|
| M39003 | Military specification number |
| 01 - 8222J | Specification sheet number, Military dash number, and "J" for JAN |
| +8.2 µF | Positive terminal identifier and capacitance value |
| 10% 50V | Capacitance tolerance and voltage |
| 31433 | Source code |
| 0333 XY K | Date code, lot code, and trademark |

**B CASE**

| | |
|---|---|
| M39003 | Military specification number |
| 01 - | Specification sheet number |
| 8006J | Military dash number and "J" for JAN |
| 31433 | Source code |
| +333 XY | Polarity, date code (1st digit indicates year and the next two digits indicate the week), lot symbol |

**CSR91 (T213) CAPACITORS A, B, C & D CASES**

| | |
|---|---|
| M39003 | Military specification number |
| 04 - 0980J | Specification sheet number, Military dash number, and "J" for JAN |
| 1 µF | Capacitance value |
| 10% 20VNP | Capacitance tolerance and voltage rating |
| 0333 XY 31433 | Date code, lot code, and source code |

**(See page 38 for CSS Marking)**

## KEMET APPROVED FAILURE RATE LEVELS — MIL-PRF-39003/H (GRADED)

| STYLE | DESCRIPTION | KEMET SERIES | APPROVED FAILURE RATE LEVEL* |
|---|---|---|---|
| CSR09 | Polar-Subminiature | T222 | D (0.001%/k hrs.) |
| CSR13* | Polar-Standard MIL Case | T212 | D (0.001%/k hrs.) |
| CSS13** | Polar-Standard MIL Case | T216 | C (0.01%/k hrs.) |
| CSR21 | Polar-Standard Low ESR MIL Case | T262 | D (0.001%/k hrs.) |
| CSR23* | Polar-Extended Range | T242 | D (0.001%/k hrs.) |

*Not approved to 'D' Failure Rate Level on all voltages and capacitance values.
**MIL-PRF-39003/10 for space applications.

| STYLE | DESCRIPTION | KEMET SERIES | APPROVED FAILURE RATE LEVEL* |
|---|---|---|---|
| CSR33* | Polar-Extended Range Low Leakage | T252 | D (0.001%/k hrs.) |
| CSS33** | Polar-Extended Range Low Leakage | T256 | C (0.01%/k hrs.) |
| CSR91* | Non-Polar | T213 | D (0.001%/k hrs.) |

*Not approved to 'D' Failure Rate Level on all voltages and capacitance values.
**MIL-PRF-39003/10 for space applications.

## PERFORMANCE CHARACTERISTICS

- CAPACITANCE/VOLTAGE RANGE: .0023-1200µF, 6-125 Volts.
- CAPACITANCE TOLERANCE: Available in standard EIA values with ±20%, ±10% and ±5% tolerances.
- DISSIPATION FACTOR: Maximum DF limits are shown in corresponding series part number listings on pages 7-41. See Application Notes Section, page 76 for additional description.
- DC LEAKAGE CURRENT: Each corresponding part number table lists maximum leakage current for each capacitor on pages 7-41. See Application Notes Section, page 76 for additional description.
- RATED VOLTAGE; WORKING VOLTAGE; SURGE VOLTAGE; REVERSE VOLTAGE: See Application Notes Section, Pages 76 & 77 for description.
- IMPEDANCE and ESR: See Application Notes Section, pages 77 & 78 for description. Reference ESR values are shown for commercial hermetically sealed capacitors on page 19.
- AC RIPPLE VOLTAGE: Permissible AC ripple voltage is related to the ESR of the capacitor and the power dissipation capabilities of a particular case size. Thermal capacities for the various case sizes have been determined empirically and are listed below. For additional description see page 78.

| Standard Case Size | Watts | T222 |
|---|---|---|
| A | .09 | .070 |
| B | .100 | .090 |
| C | .125 | — |
| D | .180 | — |

**Maximum Power Dissipation: 25°C Ambient**

- ENVIRONMENTAL CONSIDERATIONS:
  A. Shock Test: MIL-STD-202, Method 213
  B. Thermal Shock, MIL-STD-202, Method 107, Condition B.
  C. Moisture Resistance: MIL-STD-202, Method 106.
  D. Solderability: MIL-STD-202, Method 208

For additional Environmental Test Information see pages 80, 81 and 82.

- LEAD MATERIAL: Standard leads are solder-coated nickel per MIL-STD-1276.
- INSULATING SLEEVES: The standard insulating material used in transparent high temperature plastic, having 2000 volt dielectric strength, excellent dimensional stability and chemical and cold flow resistance.
- LEAD TAPE and REEL: Reeling per specification RS-296. See pages 71 and 73 for additional information.

# TANTALUM HERMETICALLY SEALED / AXIAL — MIL-PRF-39003

## T110 SERIES — POLAR TYPE, T212 (CSR13)

KEMET standard hermetic sealed T110 Series are desirable for use in high humidity environments. They are ruggedly built, designed for miniaturized circuitry, and are especially suited for coupling, bypass, filtering and R-C timing circuits. They exhibit excellent stability, extremely low DC leakage current, dissipation factor, and ESR/impedance over a wide temperature and frequency range.

Available in standard EIA capacitance values from .0047-330 µF in ±20%, ±10%, and ±5% tolerances and working voltages from 6-125 VDC.

Higher CV values in comparable case sizes are available in KEMET T140 Series. Refer to page 27.

Included in the following Series table is a complete listing of CSR13 qualified MIL-PRF-39003 capacitors. KEMET is approved to manufacture the S (0.001%/k hrs.) Exponential & D (0.001%/k hrs.) Graded failure rate levels.

KEMET is now offering low ESR limits in the T110 Series. See ESR chart on page 19. You may order the lower ESR by using Customer Specification 2864 as the last four digits of the part number.

**Effective September 30, 2005, the KEMET T110 Series is RoHS Compliant.**

## CAPACITOR OUTLINE DRAWINGS

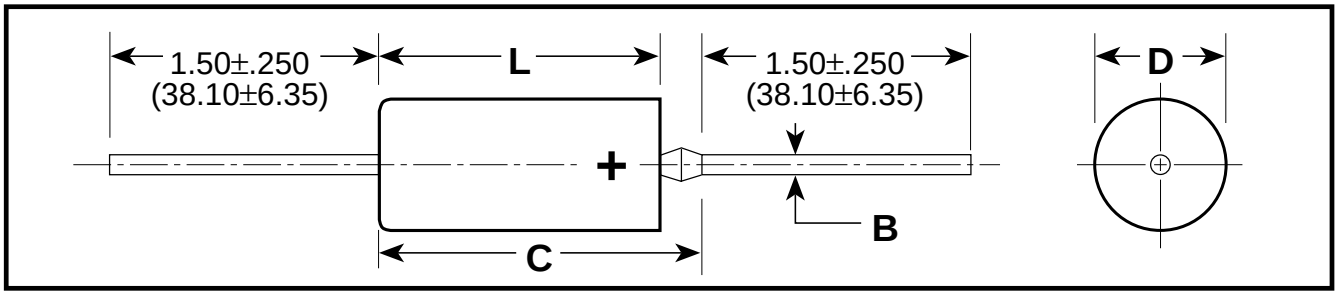


## DIMENSIONS — INCHES & (MILLIMETERS)

| CASE SIZE | UNINSULATED D ±0.005 ±(.13) | UNINSULATED L ±0.031 ±(.79) | INSULATED D ±0.010 ±(.25) | INSULATED L ±0.031 ±(.79) | B ±0.002 ±(.05) | C MAX. |
|---|---|---|---|---|---|---|
| A | 0.125 (3.18) | 0.250 (6.35) | 0.135 (3.43) | 0.286 (7.26) | 0.020 (.51) | 0.422 (10.72) |
| B | 0.175 (4.45) | 0.438 (11.13) | 0.185 (4.70) | 0.474 (12.04) | 0.020 (.51) | 0.610 (15.49) |
| C | 0.279 (7.09) | 0.650 (16.51) | 0.289 (7.34) | 0.686 (17.42) | 0.025 (.64) | 0.822 (20.88) |
| D | 0.341 (8.66) | 0.750 (19.05) | 0.351 (8.92) | 0.786 (19.96) | 0.025 (.64) | 0.922 (23.42) |

## ORDERING INFORMATION*

**T XXX A 105 K 050 A S C**

**TANTALUM** — T

**SERIES** — XXX
T110, T212 (CSR13)
T111, T213 (CSR91)
T140, T242 (CSR23)

**CASE SIZE** — A
A / B / C / D

**PICOFARAD CODE** — 105
First two digits represent significant figures.
Third digit specifies number of zeros to follow.

**CAPACITANCE TOLERANCE** — K
M — ±20%  K — ±10%  J — ±5%

**VOLTAGE** — 050
At 85°C

**SPECIFICATION** — C
**All capacitors are sleeved unless specified.**

**LEAD MATERIAL** — S
S — Standard
**T – 100% Tin (T110, T140 Series only)**

**FAILURE RATE**** — A

| GRADED | EXPONENTIAL |
|---|---|
| A — Not Applicable | M — 1%/k hrs. |
| B — 0.1%/k hrs. | P — 0.1%/k hrs. |
| C — 0.01%/k hrs. | R — 0.01%/k hrs. |
| D — 0.001%/k hrs. | S — 0.001%/k hrs. |

****Failure Rates apply only to military products.**

****Part Number Example: T110A105K050AS (14 digits - no spaces)**
***For Military Ordering Information, see page 4.**

## MARKING INFORMATION

Marking: Unless otherwise specified by special order, standard marking of T110 Series capacitor consists of the following:

**A, B, C & D CASES**

| | |
|---|---|
| +K 10% | Polarity, Manufacturer's Identification and Capacitance Tol. |
| R56 µF | Nominal Capacitance — (µF) ("R" indicates decimal) |
| 100V | Voltage |
| 0312 | Date Code (e.g.: 0312) |

*** For Military Marking, see page 4.**


**KEMET Electronics Corporation, P.O. Box 5928, Greenville, S.C. 29606 (864) 963-6300**

## RATINGS & PART NUMBER REFERENCE

| CAPACITANCE µF | CASE SIZE | CAPACITANCE TOLERANCE ±% | KEMET T110 KEMET PART NUMBER | D.C. LEAKAGE µA@25°C MAX. | MAX. DISSIPATION FACTOR %@25°C, 120Hz | MIL-PRF-39003 (CSR13) CAPACITORS — DASH NUMBER REFERENCE FAILURE RATE LEVEL (%/1000 HRS.) — MIL-PRF-39003/1H EXPONENTIAL M (1.0) | P (0.1) | R (0.01) | S (0.001) | MIL-PRF-39003/1H GRADED B (0.1) | C (0.01) | D (0.001) | KEMET EQUIVALENT MILITARY PART NUMBER |
|---|---|---|---|---|---|---|---|---|---|---|---|---|---|
| **6 VOLT RATING AT 85°C — 4 VOLT RATING AT 125°C** | | | | | | | | | | | | | |
| 2.2 | A | 5,10,20 | T110A225(1)006AS | 0.3 | 4 | | | | | | | | |
| 2.7 | A | 5,10,20 | T110A275(1)006AS | 0.3 | 4 | | | | | | | | |
| 3.3 | A | 5,10,20 | T110A335(1)006AS | 0.3 | 4 | | | | | | | | |
| 3.9 | A | 5,10,20 | T110A395(1)006AS | 0.3 | 4 | | | | | | | | |
| 4.7 | A | 5,10,20 | T110A475(1)006AS | 0.3 | 4 | | | | | | | | |
| 5.6 | A | 5 | T110A565J006AS | 0.3 | 4 | 5001 | 5201 | 5401 | 5601 | 6001 | 7001 | 8001 | T212A565J006(2)S |
| 5.6 | A | 10 | T110A565K006AS | 0.3 | 4 | 2241 | 2481 | 2721 | 2961 | 6002 | 7002 | 8002 | T212A565K006(2)S |
| 5.6 | A | 20 | T110A565M006AS | 0.3 | 4 | | | | | | | | |
| **6.8** | **A** | **5** | **T110A685J006AS** | **0.3** | **6** | **5002** | **5202** | **5402** | **5602** | **6003** | **7003** | **8003** | **T212A685J006(2)S** |
| **6.8** | **A** | **10** | **T110A685K006AS** | **0.3** | **6** | **2242** | **2482** | **2722** | **2962** | **6004** | **7004** | **8004** | **T212A685K006(2)S** |
| **6.8** | **A** | **20** | **T110A685M006AS** | **0.3** | **6** | **2243** | **2483** | **2723** | **2963** | **6005** | **7005** | **8005** | **T212A685M006(2)S** |
| 8.2 | B | 5,10,20 | T110B825(1)006AS | 0.3 | 6 | | | | | | | | |
| 10.0 | B | 5,10,20 | T110B106(1)006AS | 0.3 | 6 | | | | | | | | |
| 12.0 | B | 5,10,20 | T110B126(1)006AS | 0.5 | 6 | | | | | | | | |
| 15.0 | B | 5,10,20 | T110B156(1)006AS | 0.9 | 6 | | | | | | | | |
| 18.0 | B | 5,10,20 | T110B186(1)006AS | 0.9 | 6 | | | | | | | | |
| 22.0 | B | 5,10,20 | T110B226(1)006AS | 0.9 | 6 | | | | | | | | |
| 27.0 | B | 5,10,20 | T110B276(1)006AS | 0.9 | 6 | | | | | | | | |
| 33.0 | B | 5,10,20 | T110B336(1)006AS | 0.9 | 6 | | | | | | | | |
| 39.0 | B | 5,10,20 | T110B396(1)006AS | 0.9 | 6 | | | | | | | | |
| **47.0** | **B** | **5** | **T110B476J006AS** | **1.5** | **6** | **5003** | **5203** | **5403** | **5603** | **6006** | **7006** | **8006** | **T212B476J006(2)S** |
| **47.0** | **B** | **10** | **T110B476K006AS** | **1.5** | **6** | **2244** | **2484** | **2724** | **2964** | **6007** | **7007** | **8007** | **T212B476K006(2)S** |
| **47.0** | **B** | **20** | **T110B476M006AS** | **1.5** | **6** | **2245** | **2485** | **2725** | **2965** | **6008** | **7008** | **8008** | **T212B476M006(2)S** |
| **56.0** | **B** | **5** | **T110B566J006AS** | **1.5** | **6** | **5004** | **5204** | **5404** | **5604** | **6009** | **7009** | **8009** | **T212B566J006(2)S** |
| **56.0** | **B** | **10** | **T110B566K006AS** | **1.5** | **6** | **2246** | **2486** | **2726** | **2966** | **6010** | **7010** | **8010** | **T212B566K006(2)S** |
| **56.0** | **B** | **20** | **T110B566M006AS** | **1.5** | **6** | | | | | | | | |
| 68.0 | C | 5,10,20 | T110C686(1)006AS | 3.0 | 6 | | | | | | | | |
| 82.0 | C | 5,10,20 | T110C826(1)006AS | 3.0 | 6 | | | | | | | | |
| 100.0 | C | 5,10,20 | T110C107(1)006AS | 3.0 | 6 | | | | | | | | |
| 120.0 | C | 5,10,20 | T110C127(1)006AS | 3.0 | 6 | | | | | | | | |
| 150.0 | C | 5 | T110C157J006AS | 4.5 | 6 | 5005 | 5205 | 5405 | 5605 | 6011 | 7011 | 8011 | T212C157J006(2)S |
| 150.0 | C | 10 | T110C157K006AS | 4.5 | 6 | 2247 | 2487 | 2727 | 2967 | 6012 | 7012 | 8012 | T212C157K006(2)S |
| 150.0 | C | 20 | T110C157M006AS | 4.5 | 6 | 2248 | 2488 | 2728 | 2968 | 6013 | 7013 | 8013 | T212C157M006(2)S |
| 180.0 | C | 5 | T110C187J006AS | 5.5 | 6 | 5006 | 5206 | 5406 | 5606 | 6014 | 7014 | 8014 | T212C187J006(2)S |
| 180.0 | C | 10 | T110C187K006AS | 5.5 | 6 | 2249 | 2489 | 2729 | 2969 | 6015 | 7015 | 8015 | T212C187K006(2)S |
| 180.0 | C | 20 | T110C187M006AS | 5.5 | 6 | | | | | | | | |
| 220.0 | D | 5,10,20 | T110D227(1)006AS | 6.0 | 8 | | | | | | | | |
| 270.0 | D | 5 | T110D277J006AS | 6.0 | 8 | 5007 | 5207 | 5407 | 5607 | 6016 | 7016 | 8016 | T212D277J006(2)S |
| 270.0 | D | 10 | T110D277K006AS | 6.0 | 8 | 2250 | 2490 | 2730 | 2970 | 6017 | 7017 | 8017 | T212D277K006(2)S |
| 270.0 | D | 20 | T110D277M006AS | 6.0 | 8 | | | | | | | | |
| **330.0** | **D** | **5** | **T110D337J006AS** | **7.5** | **8** | **5008** | **5208** | **5408** | **5608** | **6018** | **7018** | **8018** | **T212D337J006(2)S** |
| **330.0** | **D** | **10** | **T110D337K006AS** | **7.5** | **8** | **2251** | **2491** | **2731** | **2971** | **6019** | **7019** | **8019** | **T212D337K006(2)S** |
| **330.0** | **D** | **20** | **T110D337M006AS** | **7.5** | **8** | **2252** | **2492** | **2732** | **2972** | **6020** | **7020** | **8020** | **T212D337M006(2)S** |
| **10 VOLT RATING AT 85°C — 7 VOLT RATING AT 125°C** | | | | | | | | | | | | | |
| 1.0 | A | 5,10,20 | T110A105(1)010AS | 0.3 | 3 | | | | | | | | |
| 1.2 | A | 5,10,20 | T110A125(1)010AS | 0.3 | 4 | | | | | | | | |
| 1.5 | A | 5,10,20 | T110A155(1)010AS | 0.3 | 4 | | | | | | | | |
| 1.8 | A | 5,10,20 | T110A185(1)010AS | 0.3 | 4 | | | | | | | | |
| 2.2 | A | 5,10,20 | T110A225(1)010AS | 0.3 | 4 | | | | | | | | |
| 2.7 | A | 5,10,20 | T110A275(1)010AS | 0.3 | 4 | | | | | | | | |
| 3.3 | A | 5,10,20 | T110A335(1)010AS | 0.3 | 4 | | | | | | | | |
| 3.9 | A | 5 | T110A395J 010AS | 0.3 | 4 | 5009 | 5209 | 5409 | 5609 | 6021 | 7021 | 8021 | T212A395J010(2)S |
| 3.9 | A | 10 | T110A395K 010AS | 0.3 | 4 | 2253 | 2493 | 2733 | 2973 | 6022 | 7022 | 8022 | T212A395K010(2)S |
| 3.9 | A | 20 | T110A395M 010AS | 0.3 | 4 | | | | | | | | |
| **4.7** | **A** | **5** | **T110A475J 010AS** | **0.4** | **4** | **5010** | **5210** | **5410** | **5610** | **6023** | **7023** | **8023** | **T212A475J010(2)S** |
| **4.7** | **A** | **10** | **T110A475K 010AS** | **0.4** | **4** | **2254** | **2494** | **2734** | **2974** | **6024** | **7024** | **8024** | **T212A475K010(2)S** |
| **4.7** | **A** | **20** | **T110A475M010AS** | **0.4** | **4** | **2255** | **2495** | **2735** | **2975** | **6025** | **7025** | **8025** | **T212A475M010(2)S** |

(1) To complete T110 Series Part Number, insert Capacitance Tolerance Symbol in the 9th Character as shown on Page 6.
(2) To complete the T212 Series Part Number, insert Failure Rate Symbol in the 13th Character.
**Bold Face** lines indicate popular part types and values.

## RATINGS & PART NUMBER REFERENCE

| CAPACITANCE µF | CASE SIZE | CAPACITANCE TOLERANCE ±% | KEMET T110 PART NUMBER | D.C. LEAKAGE µA@25°C MAX. | MAX. DISSIPATION FACTOR %@25°C, 120Hz | MIL-PRF-39003 (CSR13) CAPACITORS — DASH NUMBER REFERENCE FAILURE RATE LEVEL (%/1000 HRS.) — MIL-PRF-39003/1H EXPONENTIAL: M (1.0) | P (0.1) | R (0.01) | S (0.001) | MIL-PRF-39003/1H GRADED: B (0.1) | C (0.01) | D (0.001) | KEMET EQUIVALENT MILITARY PART NUMBER |
|---|---|---|---|---|---|---|---|---|---|---|---|---|---|
| **10 VOLT RATING AT 85°C — 7 VOLT RATING AT 125°C (Cont'd)** | | | | | | | | | | | | | |
| 5.6 | B | 5,10,20 | T110B565(1)010AS | 0.4 | 4 | | | | | | | | |
| 6.8 | B | 5,10,20 | T110B685(1)010AS | 1.0 | 6 | | | | | | | | |
| 8.2 | B | 5,10,20 | T110B825(1)010AS | 1.0 | 6 | | | | | | | | |
| 10.0 | B | 5,10,20 | T110B106(1)010AS | 1.0 | 6 | | | | | | | | |
| 12.0 | B | 5,10,20 | T110B126(1)010AS | 1.0 | 6 | | | | | | | | |
| 15.0 | B | 5,10,20 | T110B156(1)010AS | 1.0 | 6 | | | | | | | | |
| 18.0 | B | 5,10,20 | T110B186(1)010AS | 1.0 | 6 | | | | | | | | |
| 22.0 | B | 5,10,20 | T110B226(1)010AS | 2.0 | 6 | | | | | | | | |
| 27.0 | B | 5 | T110B276J010AS | 2.0 | 6 | 5011 | 5211 | 5411 | 5611 | 6026 | 7026 | 8026 | T212B276J010(2)S |
| 27.0 | B | 10 | T110B276K010AS | 2.0 | 6 | 2256 | 2496 | 2736 | 2976 | 6027 | 7027 | 8027 | T212B276K010(2)S |
| 27.0 | B | 20 | T110B276M010AS | 2.0 | 6 | | | | | | | | |
| **33.0** | **B** | **5** | **T110B336J010AS** | **2.0** | **6** | **5012** | **5212** | **5412** | **5612** | **6028** | **7028** | **8028** | **T212B336J010(2)S** |
| **33.0** | **B** | **10** | **T110B336K010AS** | **2.0** | **6** | **2257** | **2497** | **2737** | **2977** | **6029** | **7029** | **8029** | **T212B336K010(2)S** |
| **33.0** | **B** | **20** | **T110B336M010AS** | **2.0** | **6** | **2258** | **2498** | **2738** | **2978** | **6030** | **7030** | **8030** | **T212B336M010(2)S** |
| **39.0** | **B** | **5** | **T110B396J010AS** | **2.0** | **6** | **5013** | **5213** | **5413** | **5613** | **6031** | **7031** | **8031** | **T212B396J010(2)S** |
| **39.0** | **B** | **10** | **T110B396K010AS** | **2.0** | **6** | **2259** | **2499** | **2739** | **2979** | **6032** | **7032** | **8032** | **T212B396K010(2)S** |
| **39.0** | **B** | **20** | **T110B396M010AS** | **2.0** | **6** | | | | | | | | |
| 47.0 | C | 5,10,20 | T110C476(1)010AS | 3.0 | 6 | | | | | | | | |
| 56.0 | C | 5,10,20 | T110C566(1)010AS | 3.0 | 6 | | | | | | | | |
| 68.0 | C | 5,10,20 | T110C686(1)010AS | 3.0 | 6 | | | | | | | | |
| 82.0 | C | 5 | T110C826J010AS | 3.0 | 6 | 5014 | 5214 | 5414 | 5614 | 6033 | 7033 | 8033 | T212C826J010(2)S |
| 82.0 | C | 10 | T110C826K010AS | 3.0 | 6 | 2260 | 2500 | 2740 | 2980 | 6034 | 7034 | 8034 | T212C826K010(2)S |
| 82.0 | C | 20 | T110C826M010AS | 3.0 | 6 | | | | | | | | |
| **100.0** | **C** | **5** | **T110C107J010AS** | **5.0** | **6** | **5015** | **5215** | **5415** | **5615** | **6035** | **7035** | **8035** | **T212C107J010(2)S** |
| **100.0** | **C** | **10** | **T110C107K010AS** | **5.0** | **6** | **2261** | **2501** | **2741** | **2981** | **6036** | **7036** | **8036** | **T212C107K010(2)S** |
| **100.0** | **C** | **20** | **T110C107M010AS** | **5.0** | **6** | **2262** | **2502** | **2742** | **2982** | **6037** | **7037** | **8037** | **T212C107M010(2)S** |
| 120.0 | C | 5 | T110C127J010AS | 6.0 | 6 | 5016 | 5216 | 5416 | 5616 | 6038 | 7038 | 8038 | T212C127J010(2)S |
| 120.0 | C | 10 | T110C127K010AS | 6.0 | 6 | 2263 | 2503 | 2743 | 2983 | 6039 | 7039 | 8039 | T212C127K010(2)S |
| 120.0 | C | 20 | T110C127M010AS | 6.0 | 6 | | | | | | | | |
| 150.0 | D | 5,10,20 | T110D157(1)010AS | 9.0 | 6 | | | | | | | | |
| 180.0 | D | 5 | T110D187J010AS | 9.0 | 6 | 5017 | 5217 | 5417 | 5617 | 6040 | 7040 | 8040 | T212D187J010(2)S |
| 180.0 | D | 10 | T110D187K010AS | 9.0 | 6 | 2264 | 2504 | 2744 | 2984 | 6041 | 7041 | 8041 | T212D187K010(2)S |
| 180.0 | D | 20 | T110D187M010AS | 9.0 | 6 | | | | | | | | |
| **220.0** | **D** | **5** | **T110D227J010AS** | **10.0** | **8** | **5018** | **5218** | **5418** | **5618** | **6042** | **7042** | **8042** | **T212D227J010(2)S** |
| **220.0** | **D** | **10** | **T110D227K010AS** | **10.0** | **8** | **2265** | **2505** | **2745** | **2985** | **6043** | **7043** | **8043** | **T212D227K010(2)S** |
| **220.0** | **D** | **20** | **T110D227M010AS** | **10.0** | **8** | **2266** | **2506** | **2746** | **2986** | **6044** | **7044** | **8044** | **T212D227M010(2)S** |
| **15 VOLT RATING AT 85°C — 10 VOLT RATING AT 125°C** | | | | | | | | | | | | | |
| 0.33 | A | 5,10,20 | T110A334(1)015AS | 0.3 | 3 | | | | | | | | |
| 0.39 | A | 5,10,20 | T110A394(1)015AS | 0.3 | 3 | | | | | | | | |
| 0.47 | A | 5,10,20 | T110A474(1)015AS | 0.3 | 3 | | | | | | | | |
| 0.56 | A | 5,10,20 | T110A564(1)015AS | 0.3 | 3 | | | | | | | | |
| 0.68 | A | 5,10,20 | T110A684(1)015AS | 0.3 | 3 | | | | | | | | |
| 0.82 | A | 5,10,20 | T110A824(1)015AS | 0.3 | 3 | | | | | | | | |
| 1.0 | A | 5,10,20 | T110A105(1)015AS | 0.3 | 3 | | | | | | | | |
| 1.2 | A | 5,10,20 | T110A125(1)015AS | 0.3 | 4 | | | | | | | | |
| 1.5 | A | 5,10,20 | T110A155(1)015AS | 0.3 | 4 | | | | | | | | |
| 1.8 | A | 5,10,20 | T110A185(1)015AS | 0.3 | 4 | | | | | | | | |
| 2.2 | A | 5,10,20 | T110A225(1)015AS | 0.3 | 4 | | | | | | | | |
| 2.7 | A | 5 | T110A275J015AS | 0.3 | 4 | 5019 | 5219 | 5419 | 5619 | 6045 | 7045 | 8045 | T212A275J015(2)S |
| 2.7 | A | 10 | T110A275K015AS | 0.3 | 4 | 2267 | 2507 | 2747 | 2987 | 6046 | 7046 | 8046 | T212A275K015(2)S |
| 2.7 | A | 20 | T110A275M015AS | 0.3 | 4 | | | | | | | | |
| **3.3** | **A** | **5** | **T110A335J015AS** | **0.4** | **4** | **5020** | **5220** | **5420** | **5620** | **6047** | **7047** | **8047** | **T212A335J015(2)S** |
| **3.3** | **A** | **10** | **T110A335K015AS** | **0.4** | **4** | **2268** | **2508** | **2748** | **2988** | **6048** | **7048** | **8048** | **T212A335K015(2)S** |
| **3.3** | **A** | **20** | **T110A335M015AS** | **0.4** | **4** | **2269** | **2509** | **2749** | **2989** | **6049** | **7049** | **8049** | **T212A335M015(2)S** |
| 3.9 | B | 5,10,20 | T110B395(1)015AS | 0.4 | 4 | | | | | | | | |
| 4.7 | B | 5,10,20 | T110B475(1)015AS | 0.7 | 4 | | | | | | | | |
| 5.6 | B | 5,10,20 | T110B565(1)015AS | 0.7 | 4 | | | | | | | | |

(1) To complete T110 Series Part Number, insert Capacitance Tolerance Symbol in the 9th Character as shown on Page 6.
(2) To complete the T212 Series Part Number, insert Failure Rate Symbol in the 13th Character.
**Bold Face** lines indicate popular part types and values.

## RATINGS & PART NUMBER REFERENCE

| CAPACITANCE µF | CASE SIZE | CAPACITANCE TOLERANCE ±% | KEMET T110 KEMET PART NUMBER | D.C. LEAKAGE µA@25°C MAX. | MAX. DISSIPATION FACTOR %@25°C, 120Hz | MIL-PRF-39003 (CSR13) CAPACITORS — DASH NUMBER REFERENCE FAILURE RATE LEVEL (%/1000 HRS.) — MIL-PRF-39003/1H EXPONENTIAL M (1.0) | P (0.1) | R (0.01) | S (0.001) | MIL-PRF-39003/1H GRADED B (0.1) | C (0.01) | D (0.001) | KEMET EQUIVALENT MILITARY PART NUMBER |
|---|---|---|---|---|---|---|---|---|---|---|---|---|---|
| **15 VOLT RATING AT 85°C — 10 VOLT RATING AT 125°C (Cont'd)** | | | | | | | | | | | | | |
| 6.8 | B | 5,10,20 | T110B685(1)015AS | 0.7 | 6 | | | | | | | | |
| 8.2 | B | 5,10,20 | T110B825(1)015AS | 0.7 | 6 | | | | | | | | |
| 10.0 | B | 5,10,20 | T110B106(1)015AS | 1.0 | 6 | | | | | | | | |
| 12.0 | B | 5,10,20 | T110B126(1)015AS | 1.0 | 6 | | | | | | | | |
| 15.0 | B | 5,10,20 | T110B156(1)015AS | 2.0 | 6 | | | | | | | | |
| 18.0 | B | 5 | T110B186J015AS | 2.0 | 6 | 5021 | 5221 | 5421 | 5621 | 6050 | 7050 | 8050 | T212B186J015(2)S |
| 18.0 | B | 10 | T110B186K015AS | 2.0 | 6 | 2270 | 2510 | 2750 | 2990 | 6051 | 7051 | 8051 | T212B186K015(2)S |
| 18.0 | B | 20 | T110B186M015AS | 2.0 | 6 | | | | | | | | |
| **22.0** | **B** | **5** | **T110B226J015AS** | **2.0** | **6** | **5022** | **5222** | **5422** | **5622** | **6052** | **7052** | **8052** | **T212B226J015(2)S** |
| **22.0** | **B** | **10** | **T110B226K015AS** | **2.0** | **6** | **2271** | **2511** | **2751** | **2991** | **6053** | **7053** | **8053** | **T212B226K015(2)S** |
| **22.0** | **B** | **20** | **T110B226M015AS** | **2.0** | **6** | **2272** | **2512** | **2752** | **2992** | **6054** | **7054** | **8054** | **T212B226M015(2)S** |
| 27.0 | C | 5,10,20 | T110C276(1)015AS | 3.0 | 6 | | | | | | | | |
| 33.0 | C | 5,10,20 | T110C336(1)015AS | 3.0 | 6 | | | | | | | | |
| 39.0 | C | 5,10,20 | T110C396(1)015AS | 3.0 | 6 | | | | | | | | |
| 47.0 | C | 5,10,20 | T110C476(1)015AS | 4.0 | 6 | | | | | | | | |
| 56.0 | C | 5 | T110C566J015AS | 4.0 | 6 | 5023 | 5223 | 5423 | 5623 | 6055 | 7055 | 8055 | T212C566J015(2)S |
| 56.0 | C | 10 | T110C566K015AS | 4.0 | 6 | 2273 | 2513 | 2753 | 2993 | 6056 | 7056 | 8056 | T212C566K015(2)S |
| 56.0 | C | 20 | T110C566M015AS | 4.0 | 6 | | | | | | | | |
| **68.0** | **C** | **5** | **T110C686J015AS** | **5.0** | **6** | **5024** | **5224** | **5424** | **5624** | **6057** | **7057** | **8057** | **T212C686J015(2)S** |
| **68.0** | **C** | **10** | **T110C686K015AS** | **5.0** | **6** | **2274** | **2514** | **2754** | **2994** | **6058** | **7058** | **8058** | **T212C686K015(2)S** |
| **68.0** | **C** | **20** | **T110C686M015AS** | **5.0** | **6** | **2275** | **2515** | **2755** | **2995** | **6059** | **7059** | **8059** | **T212C686M015(2)S** |
| 82.0 | D | 5,10,20 | T110D826(1)015AS | 6.0 | 6 | | | | | | | | |
| 100.0 | D | 5,10,20 | T110D107(1)015AS | 6.0 | 6 | | | | | | | | |
| 120.0 | D | 5 | T110D127J015AS | 6.0 | 6 | 5025 | 5225 | 5425 | 5625 | 6060 | 7060 | 8060 | T212D127J015(2)S |
| 120.0 | D | 10 | T110D127K015AS | 6.0 | 6 | 2276 | 2516 | 2756 | 2996 | 6061 | 7061 | 8061 | T212D127K015(2)S |
| 120.0 | D | 20 | T110D127M015AS | 6.0 | 6 | | | | | | | | |
| **150.0** | **D** | **5** | **T110D157J015AS** | **8.0** | **6** | **5026** | **5226** | **5426** | **5626** | **6062** | **7062** | **8062** | **T212D157J015(2)S** |
| **150.0** | **D** | **10** | **T110D157K015AS** | **8.0** | **6** | **2277** | **2517** | **2757** | **2997** | **6063** | **7063** | **8063** | **T212D157K015(2)S** |
| **150.0** | **D** | **20** | **T110D157M015AS** | **8.0** | **6** | **2278** | **2518** | **2758** | **2998** | **6064** | **7064** | **8064** | **T212D157M015(2)S** |
| **20 VOLT RATING AT 85°C — 13 VOLT RATING AT 125°C** | | | | | | | | | | | | | |
| 0.047 | A | 5,10,20 | T110A473(1)020AS | 0.1 | 3 | | | | | | | | |
| 0.056 | A | 5,10,20 | T110A563(1)020AS | 0.1 | 3 | | | | | | | | |
| 0.068 | A | 5,10,20 | T110A683(1)020AS | 0.1 | 3 | | | | | | | | |
| 0.082 | A | 5,10,20 | T110A823(1)020AS | 0.1 | 3 | | | | | | | | |
| 0.1 | A | 5,10,20 | T110A104(1)020AS | 0.3 | 3 | | | | | | | | |
| 0.12 | A | 5,10,20 | T110A124(1)020AS | 0.3 | 3 | | | | | | | | |
| 0.15 | A | 5,10,20 | T110A154(1)020AS | 0.3 | 3 | | | | | | | | |
| 0.18 | A | 5,10,20 | T110A184(1)020AS | 0.3 | 3 | | | | | | | | |
| 0.22 | A | 5,10,20 | T110A224(1)020AS | 0.3 | 3 | | | | | | | | |
| 0.27 | A | 5,10,20 | T110A274(1)020AS | 0.3 | 3 | | | | | | | | |
| 0.33 | A | 5,10,20 | T110A334(1)020AS | 0.3 | 3 | | | | | | | | |
| 0.39 | A | 5,10,20 | T110A394(1)020AS | 0.3 | 3 | | | | | | | | |
| 0.47 | A | 5,10,20 | T110A474(1)020AS | 0.3 | 3 | | | | | | | | |
| 0.56 | A | 5,10,20 | T110A564(1)020AS | 0.3 | 3 | | | | | | | | |
| 0.68 | A | 5,10,20 | T110A684(1)020AS | 0.3 | 3 | | | | | | | | |
| 0.82 | A | 5,10,20 | T110A824(1)020AS | 0.3 | 3 | | | | | | | | |
| 1.0 | A | 5,10,20 | T110A105(1)020AS | 0.3 | 3 | | | | | | | | |
| 1.2 | A | 5 | T110A125J020AS | 0.3 | 4 | 5027 | 5227 | 5427 | 5627 | 6065 | 7065 | 8065 | T212A125J020(2)S |
| 1.2 | A | 10 | T110A125K020AS | 0.3 | 4 | 2279 | 2519 | 2759 | 2999 | 6066 | 7066 | 8066 | T212A125K020(2)S |
| 1.2 | A | 20 | T110A125M020AS | 0.3 | 4 | | | | | | | | |
| **1.5** | **A** | **5** | **T110A155J020AS** | **0.3** | **4** | **5028** | **5228** | **5428** | **5628** | **6067** | **7067** | **8067** | **T212A155J020(2)S** |
| **1.5** | **A** | **10** | **T110A155K020AS** | **0.3** | **4** | **2280** | **2520** | **2760** | **3000** | **6068** | **7068** | **8068** | **T212A155K020(2)S** |
| **1.5** | **A** | **20** | **T110A155M020AS** | **0.3** | **4** | **2281** | **2521** | **2761** | **3001** | **6069** | **7069** | **8069** | **T212A155M020(2)S** |
| 1.8 | A | 5 | T110A185J020AS | 0.3 | 4 | 5029 | 5229 | 5429 | 5629 | 6070 | 7070 | 8070 | T212A185J020(2)S |
| 1.8 | A | 10 | T110A185K020AS | 0.3 | 4 | 2282 | 2522 | 2762 | 3002 | 6071 | 7071 | 8071 | T212A185K020(2)S |
| 1.8 | A | 20 | T110A185M020AS | 0.3 | 4 | | | | | | | | |
| **2.2** | **A** | **5** | **T110A225J020AS** | **0.4** | **4** | **5010** | **5230** | **5430** | **5630** | **6072** | **7072** | **8072** | **T212A225J020(2)S** |
| **2.2** | **A** | **10** | **T110A225K020AS** | **0.4** | **4** | **2283** | **2523** | **2763** | **3003** | **6073** | **7073** | **8073** | **T212A225K020(2)S** |
| **2.2** | **A** | **20** | **T110A225M020AS** | **0.4** | **4** | **2284** | **2524** | **2764** | **3004** | **6074** | **7074** | **8074** | **T212A225M020(2)S** |

(1) To complete T110 Series Part Number, insert Capacitance Tolerance Symbol in the 9th Character as shown on Page 6.
(2) To complete the T212 Series Part Number, insert Failure Rate Symbol in the 13th Character.
**Bold Face** lines indicate popular part types and values.

## RATINGS & PART NUMBER REFERENCE

| CAPACITANCE µF | CASE SIZE | CAPACITANCE TOLERANCE ±% | KEMET T110 KEMET PART NUMBER | D.C. LEAKAGE µA@25°C MAX. | MAX. DISSIPATION FACTOR %@25°C, 120Hz | MIL-PRF-39003 (CSR13) CAPACITORS — DASH NUMBER REFERENCE FAILURE RATE LEVEL (%/1000 HRS.) — MIL-PRF-39003/1H EXPONENTIAL: M (1.0) | P (0.1) | R (0.01) | S (0.001) | MIL-PRF-39003/1H GRADED: B (0.1) | C (0.01) | D (0.001) | KEMET EQUIVALENT MILITARY PART NUMBER |
|---|---|---|---|---|---|---|---|---|---|---|---|---|---|
| **20 VOLT RATING AT 85°C — 13 VOLT RATING AT 125°C (Cont'd)** | | | | | | | | | | | | | |
| 2.7 | B | 5,10,20 | T110B275(1)020AS | 0.5 | 4 | | | | | | | | |
| 3.3 | B | 5,10,20 | T110B335(1)020AS | 1.0 | 4 | | | | | | | | |
| 3.9 | B | 5,10,20 | T110B395(1)020AS | 1.0 | 4 | | | | | | | | |
| 4.7 | B | 5,10,20 | T110B475(1)020AS | 1.0 | 4 | | | | | | | | |
| 5.6 | B | 5,10,20 | T110B565(1)020AS | 1.0 | 4 | | | | | | | | |
| 6.8 | B | 5,10,20 | T110B685(1)020AS | 1.0 | 4 | | | | | | | | |
| 8.2 | B | 5 | T110B825J020AS | 1.0 | 6 | 5031 | 5231 | 5431 | 5631 | 6075 | 7075 | 8075 | T212B825J020(2)S |
| 8.2 | B | 10 | T110B825K020AS | 1.0 | 6 | 2285 | 2525 | 2765 | 3005 | 6076 | 7076 | 8076 | T212B825K020(2)S |
| 8.2 | B | 20 | T110B825M020AS | 1.0 | 6 | | | | | | | | |
| **10.0** | **B** | **5** | **T110B106J020AS** | **1.0** | **6** | **5032** | **5232** | **5432** | **5632** | **6077** | **7077** | **8077** | **T212B106J020(2)S** |
| **10.0** | **B** | **10** | **T110B106K020AS** | **1.0** | **6** | **2286** | **2526** | **2766** | **3006** | **6078** | **7078** | **8078** | **T212B106K020(2)S** |
| **10.0** | **B** | **20** | **T110B106M020AS** | **1.0** | **6** | **2287** | **2527** | **2767** | **3007** | **6079** | **7079** | **8079** | **T212B106M020(2)S** |
| 12.0 | B | 5 | T110B126J020AS | 1.0 | 6 | 5033 | 5233 | 5433 | 5633 | 6080 | 7080 | 8080 | T212B126J020(2)S |
| 12.0 | B | 10 | T110B126K020AS | 1.0 | 6 | 2288 | 2528 | 2768 | 3008 | 6081 | 7081 | 8081 | T212B126K020(2)S |
| 12.0 | B | 20 | T110B126M020AS | 1.0 | 6 | | | | | | | | |
| **15.0** | **B** | **5** | **T110B156J020AS** | **2.0** | **6** | **5034** | **5234** | **5434** | **5634** | **6082** | **7082** | **8082** | **T212B156J020(2)S** |
| **15.0** | **B** | **10** | **T110B156K020AS** | **2.0** | **6** | **2289** | **2529** | **2769** | **3009** | **6083** | **7083** | **8083** | **T212B156K020(2)S** |
| **15.0** | **B** | **20** | **T110B156M020AS** | **2.0** | **6** | **2290** | **2530** | **2770** | **3010** | **6084** | **7084** | **8084** | **T212B156M020(2)S** |
| 18.0 | C | 5,10,20 | T110C186(1)020AS | 2.0 | 6 | | | | | | | | |
| 22.0 | C | 5,10,20 | T110C226(1)020AS | 2.5 | 6 | | | | | | | | |
| 27.0 | C | 5 | T110C276J020AS | 2.5 | 6 | 5035 | 5235 | 5435 | 5635 | 6085 | 7085 | 8085 | T212C276J020(2)S |
| 27.0 | C | 10 | T110C276K020AS | 2.5 | 6 | 2291 | 2531 | 2771 | 3011 | 6086 | 7086 | 8086 | T212C276K020(2)S |
| 27.0 | C | 20 | T110C276M020AS | 2.5 | 6 | | | | | | | | |
| 33.0 | C | 5 | T110C336J020AS | 3.0 | 6 | 5036 | 5236 | 5436 | 5636 | 6087 | 7087 | 8087 | T212C336J020(2)S |
| 33.0 | C | 10 | T110C336K020AS | 3.0 | 6 | 2292 | 2532 | 2772 | 3012 | 6088 | 7088 | 8088 | T212C336K020(2)S |
| 33.0 | C | 20 | T110C336M020AS | 3.0 | 6 | 2293 | 2533 | 2773 | 3013 | 6089 | 7089 | 8089 | T212C336M020(2)S |
| 39.0 | C | 5 | T110C396J020AS | 3.0 | 6 | 5037 | 5237 | 5437 | 5637 | 6090 | 7090 | 8090 | T212C396J020(2)S |
| 39.0 | C | 10 | T110C396K020AS | 3.0 | 6 | 2294 | 2534 | 2774 | 3014 | 6091 | 7091 | 8091 | T212C396K020(2)S |
| 39.0 | C | 20 | T110C396M020AS | 3.0 | 6 | | | | | | | | |
| **47.0** | **C** | **5** | **T110C476J020AS** | **4.5** | **6** | **5038** | **5238** | **5438** | **5638** | **6092** | **7092** | **8092** | **T212C476J020(2)S** |
| **47.0** | **C** | **10** | **T110C476K020AS** | **4.5** | **6** | **2295** | **2535** | **2775** | **3015** | **6093** | **7093** | **8093** | **T212C476K020(2)S** |
| **47.0** | **C** | **20** | **T110C476M020AS** | **4.5** | **6** | **2296** | **2536** | **2776** | **3016** | **6094** | **7094** | **8094** | **T212C476M020(2)S** |
| 56.0 | D | 5 | T110D566J020AS | 5.5 | 6 | 5039 | 5239 | 5439 | 5639 | 6095 | 7095 | 8095 | T212D566J020(2)S |
| 56.0 | D | 10 | T110D566K020AS | 5.5 | 6 | 2297 | 2537 | 2777 | 3017 | 6096 | 7096 | 8096 | T212D566K020(2)S |
| 56.0 | D | 20 | T110D566M020AS | 5.5 | 6 | | | | | | | | |
| 68.0 | D | 5 | T110D686J020AS | 6.0 | 6 | 5040 | 5240 | 5440 | 5640 | 6097 | 7097 | 8097 | T212D686J020(2)S |
| 68.0 | D | 10 | T110D686K020AS | 6.0 | 6 | 2298 | 2538 | 2778 | 3018 | 6098 | 7098 | 8098 | T212D686K020(2)S |
| 68.0 | D | 20 | T110D686M020AS | 6.0 | 6 | 2299 | 2539 | 2779 | 3019 | 6099 | 7099 | 8099 | T212D686M020(2)S |
| 82.0 | D | 5 | T110D826J020AS | 6.0 | 6 | 5041 | 5241 | 5441 | 5641 | 6100 | 7100 | 8100 | T212D826J020(2)S |
| 82.0 | D | 10 | T110D826K020AS | 6.0 | 6 | 2300 | 2540 | 2780 | 3020 | 6101 | 7101 | 8101 | T212D826K020(2)S |
| 82.0 | D | 20 | T110D826M020AS | 6.0 | 6 | | | | | | | | |
| **100.0** | **D** | **5** | **T110D107J020AS** | **10.0** | **6** | **5042** | **5242** | **5442** | **5642** | **6102** | **7102** | **8102** | **T212D107J020(2)S** |
| **100.0** | **D** | **10** | **T110D107K020AS** | **10.0** | **6** | **2301** | **2541** | **2781** | **3021** | **6103** | **7103** | **8103** | **T212D107K020(2)S** |
| **100.0** | **D** | **20** | **T110D107M020AS** | **10.0** | **6** | **2302** | **2542** | **2782** | **3022** | **6104** | **7104** | **8104** | **T212D107M020(2)S** |
| **35 VOLT RATING AT 85°C — 23 VOLT RATING AT 125°C** | | | | | | | | | | | | | |
| 0.0047 | A | 5,10,20 | T110A472(1)035AS | 0.1 | 3 | | | | | | | | |
| 0.0056 | A | 5,10,20 | T110A562(1)035AS | 0.1 | 3 | | | | | | | | |
| 0.0068 | A | 5,10,20 | T110A682(1)035AS | 0.1 | 3 | | | | | | | | |
| 0.0082 | A | 5,10,20 | T110A822(1)035AS | 0.1 | 3 | | | | | | | | |
| 0.01 | A | 5,10,20 | T110A103(1)035AS | 0.1 | 3 | | | | | | | | |
| 0.012 | A | 5,10,20 | T110A123(1)035AS | 0.1 | 3 | | | | | | | | |
| 0.015 | A | 5,10,20 | T110A153(1)035AS | 0.1 | 3 | | | | | | | | |
| 0.018 | A | 5,10,20 | T110A183(1)035AS | 0.1 | 3 | | | | | | | | |
| 0.022 | A | 5,10,20 | T110A223(1)035AS | 0.1 | 3 | | | | | | | | |
| 0.027 | A | 5,10,20 | T110A273(1)035AS | 0.1 | 3 | | | | | | | | |
| 0.033 | A | 5,10,20 | T110A333(1)035AS | 0.1 | 3 | | | | | | | | |
| 0.039 | A | 5,10,20 | T110A393(1)035AS | 0.1 | 3 | | | | | | | | |
| 0.047 | A | 5,10,20 | T110A473(1)035AS | 0.1 | 3 | | | | | | | | |
| 0.056 | A | 5,10,20 | T110A563(1)035AS | 0.1 | 3 | | | | | | | | |

(1) To complete T110 Series part number, insert Capacitance Tolerance Symbol in the 9th Character as shown on Page 6.
(2) To complete the T212 Series Part Number, insert Failure Rate Symbol in the 13th Character.
**Bold Face** lines indicate popular part types and values.

## RATINGS & PART NUMBER REFERENCE

| CAPACITANCE µF | CASE SIZE | CAPACITANCE TOLERANCE ±% | KEMET T110 KEMET PART NUMBER | D.C. LEAKAGE µA@25°C MAX. | MAX. DISSIPATION FACTOR %@25°C, 120Hz | MIL-PRF-39003 (CSR13) CAPACITORS — DASH NUMBER REFERENCE FAILURE RATE LEVEL (%/1000 HRS.) — MIL-PRF-39003/1H EXPONENTIAL M (1.0) | P (0.1) | R (0.01) | S (0.001) | MIL-PRF-39003/1H GRADED B (0.1) | C (0.01) | D (0.001) | KEMET EQUIVALENT MILITARY PART NUMBER |
|---|---|---|---|---|---|---|---|---|---|---|---|---|---|
| **35 VOLT RATING AT 85°C — 23 VOLT RATING AT 125° (Cont'd)** | | | | | | | | | | | | | |
| 0.068 | A | 5,10,20 | T110A683(1)035AS | 0.1 | 3 | | | | | | | | |
| 0.082 | A | 5,10,20 | T110A823(1)035AS | 0.1 | 3 | | | | | | | | |
| **0.1** | **A** | **5,10,20** | **T110A104(1)035AS** | **0.5** | **3** | | | | | | | | |
| 0.12 | A | 5,10,20 | T110A124(1)035AS | 0.5 | 3 | | | | | | | | |
| 0.15 | A | 5,10,20 | T110A154(1)035AS | 0.5 | 3 | | | | | | | | |
| 0.18 | A | 5,10,20 | T110A184(1)035AS | 0.5 | 3 | | | | | | | | |
| **0.22** | **A** | **5,10,20** | **T110A224(1)035AS** | **0.5** | **3** | | | | | | | | |
| 0.27 | A | 5,10,20 | T110A274(1)035AS | 0.5 | 3 | | | | | | | | |
| **0.33** | **A** | **5,10,20** | **T110A334(1)035AS** | **0.5** | **3** | | | | | | | | |
| 0.39 | A | 5,10,20 | T110A394(1)035AS | 0.5 | 3 | | | | | | | | |
| 0.47 | A | 5,10,20 | T110A474(1)035AS | 0.5 | 3 | | | | | | | | |
| 0.56 | A | 5,10,20 | T110A564(1)035AS | 0.5 | 3 | | | | | | | | |
| **0.68** | **A** | **5,10,20** | **T110A684(1)035AS** | **0.5** | **3** | | | | | | | | |
| 0.82 | A | 5,10,20 | T110A824(1)035AS | 0.5 | 3 | | | | | | | | |
| **1.0** | **A** | **5,10,20** | **T110A105(1)035AS** | **0.5** | **3** | | | | | | | | |
| 1.2 | B | 5,10,20 | T110B125(1)035AS | 0.5 | 4 | | | | | | | | |
| 1.5 | B | 5,10,20 | T110B155(1)035AS | 0.5 | 4 | | | | | | | | |
| 1.8 | B | 5,10,20 | T110B185(1)035AS | 0.5 | 4 | | | | | | | | |
| 2.2 | B | 5,10,20 | T110B225(1)035AS | 1.0 | 4 | | | | | | | | |
| 2.7 | B | 5,10,20 | T110B275(1)035AS | 1.0 | 4 | | | | | | | | |
| **3.3** | **B** | **5,10,20** | **T110B335(1)035AS** | **1.0** | **4** | | | | | | | | |
| 3.9 | B | 5,10,20 | T110B395(1)035AS | 1.0 | 4 | | | | | | | | |
| **4.7** | **B** | **5,10,20** | **T110B475(1)035AS** | **1.0** | **4** | | | | | | | | |
| 5.6 | B | 5 | T110B565J035AS | 1.0 | 4 | 5043 | 5243 | 5443 | 5643 | 6105 | 7105 | 8105 | T212B565J035(2)S |
| 5.6 | B | 10 | T110B565K035AS | 1.0 | 4 | 2303 | 2543 | 2783 | 3023 | 6106 | 7106 | 8106 | T212B565K035(2)S |
| 5.6 | B | 20 | T110B565M035AS | 1.0 | 4 | | | | | | | | |
| **6.8** | **B** | **5** | **T110B685J035AS** | **1.5** | **4** | **5044** | **5244** | **5444** | **5644** | **6107** | **7107** | **8107** | **T212B685J035(2)S** |
| **6.8** | **B** | **10** | **T110B685K035AS** | **1.5** | **4** | **2304** | **2544** | **2784** | **3024** | **6108** | **7108** | **8108** | **T212B685K035(2)S** |
| **6.8** | **B** | **20** | **T110B685M035AS** | **1.5** | **4** | **2305** | **2545** | **2785** | **3025** | **6109** | **7109** | **8109** | **T212B685M035(2)S** |
| 8.2 | C | 5,10,20 | T110C825(1)035AS | 3.0 | 4 | | | | | | | | |
| 10.0 | C | 5,10,20 | T110C106(1)035AS | 3.0 | 4 | | | | | | | | |
| 12.0 | C | 5,10,20 | T110C126(1)035AS | 3.0 | 4 | | | | | | | | |
| 15.0 | C | 5,10,20 | T110C156(1)035AS | 3.0 | 4 | | | | | | | | |
| 18.0 | C | 5,10,20 | T110C186(1)035AS | 3.0 | 4 | | | | | | | | |
| **22.0** | **C** | **5** | **T110C226J035AS** | **4.0** | **4** | **5045** | **5245** | **5445** | **5645** | **6110** | **7110** | **8110** | **T212C226J035(2)S** |
| **22.0** | **C** | **10** | **T110C226K035AS** | **4.0** | **4** | **2306** | **2546** | **2786** | **3026** | **6111** | **7111** | **8111** | **T212C226K035(2)S** |
| **22.0** | **C** | **20** | **T110C226M035AS** | **4.0** | **4** | **2307** | **2547** | **2787** | **3027** | **6112** | **7112** | **8112** | **T212C226M035(2)S** |
| 27.0 | D | 5 | T110D276J035AS | 4.5 | 4 | 5046 | 5246 | 5446 | 5646 | 6113 | 7113 | 8113 | T212D276J035(2)S |
| 27.0 | D | 10 | T110D276K035AS | 4.5 | 4 | 2308 | 2548 | 2788 | 3028 | 6114 | 7114 | 8114 | T212D276K035(2)S |
| 27.0 | D | 20 | T110D276M035AS | 4.5 | 4 | | | | | | | | |
| **33.0** | **D** | **5** | **T110D336J035AS** | **5.5** | **4** | **5047** | **5247** | **5447** | **5647** | **6115** | **7115** | **8115** | **T212D336J035(2)S** |
| **33.0** | **D** | **10** | **T110D336K035AS** | **5.5** | **4** | **2309** | **2549** | **2789** | **3029** | **6116** | **7116** | **8116** | **T212D336K035(2)S** |
| **33.0** | **D** | **20** | **T110D336M035AS** | **5.5** | **4** | **2310** | **2550** | **2790** | **3030** | **6117** | **7117** | **8117** | **T212D336M035(2)S** |
| 39.0 | D | 5 | T110D396J035AS | 6.0 | 4 | 5048 | 5248 | 5448 | 5648 | 6118 | 7118 | 8118 | T212D396J035(2)S |
| 39.0 | D | 10 | T110D396K035AS | 6.0 | 4 | 2311 | 2551 | 2791 | 3031 | 6119 | 7119 | 8119 | T212D396K035(2)S |
| 39.0 | D | 20 | T110D396M035AS | 6.0 | 4 | | | | | | | | |
| **47.0** | **D** | **5** | **T110D476J035AS** | **8.0** | **4** | **5049** | **5249** | **5449** | **5649** | **6120** | **7120** | **8120** | **T212D476J035(2)S** |
| **47.0** | **D** | **10** | **T110D476K035AS** | **8.0** | **4** | **2312** | **2552** | **2792** | **3032** | **6121** | **7121** | **8121** | **T212D476K035(2)S** |
| **47.0** | **D** | **20** | **T110D476M035AS** | **8.0** | **4** | **2313** | **2553** | **2793** | **3033** | **6122** | **7122** | **8122** | **T212D476M035(2)S** |
| **50 VOLT RATING AT 85°C — 33 VOLT RATING AT 125°** | | | | | | | | | | | | | |
| 0.0047 | A | 5 | T110A472J050AS | 0.1 | 2 | 5050 | 5250 | 5450 | 5650 | 6123 | 7123 | 8123 | T212A472J050(2)S |
| 0.0047 | A | 10 | T110A472K050AS | 0.1 | 2 | 2314 | 2554 | 2794 | 3034 | 6124 | 7124 | 8124 | T212A472K050(2)S |
| 0.0047 | A | 20 | T110A472M050AS | 0.1 | 2 | 2315 | 2555 | 2795 | 3035 | 6125 | 7125 | 8125 | T212A472M050(2)S |
| 0.0056 | A | 5 | T110A562J050AS | 0.1 | 2 | 5051 | 5251 | 5451 | 5651 | 6126 | 7126 | 8126 | T212A562J050(2)S |
| 0.0056 | A | 10 | T110A562K050AS | 0.1 | 2 | 2316 | 2556 | 2796 | 3036 | 6127 | 7127 | 8127 | T212A562K050(2)S |
| 0.0056 | A | 20 | T110A562M050AS | 0.1 | 2 | | | | | | | | |
| 0.0068 | A | 5 | T110A682J050AS | 0.1 | 2 | 5052 | 5252 | 5452 | 5652 | 6128 | 7128 | 8128 | T212A682J050(2)S |
| 0.0068 | A | 10 | T110A682K050AS | 0.1 | 2 | 2317 | 2557 | 2797 | 3037 | 6129 | 7129 | 8129 | T212A682K050(2)S |
| 0.0068 | A | 20 | T110A682M050AS | 0.1 | 2 | 2318 | 2558 | 2798 | 3038 | 6130 | 7130 | 8130 | T212A682M050(2)S |

(1) To complete T110 Series Part Number, insert Capacitance Tolerance Symbol in the 9th Character as shown on Page 6.
(2) To complete the T212 Series Part Number, insert Failure Rate Symbol in the 13th Character.
**Bold Face** lines indicate popular part types and values.

## RATINGS & PART NUMBER REFERENCE

| CAPACITANCE µF | CASE SIZE | CAPACITANCE TOLERANCE ±% | KEMET T110 KEMET PART NUMBER | D.C. LEAKAGE µA@25°C MAX. | MAX. DISSIPATION FACTOR %@25°C, 120Hz | MIL-PRF-39003 (CSR13) CAPACITORS — DASH NUMBER REFERENCE FAILURE RATE LEVEL (%/1000 HRS.) — MIL-PRF-39003/1H EXPONENTIAL M (1.0) | P (0.1) | R (0.01) | S (0.001) | MIL-PRF-39003/1H GRADED B (0.1) | C (0.01) | D (0.001) | KEMET EQUIVALENT MILITARY PART NUMBER |
|---|---|---|---|---|---|---|---|---|---|---|---|---|---|
| **50 VOLT RATING AT 85°C — 33 VOLT RATING AT 125°C (Cont'd)** | | | | | | | | | | | | | |
| 0.0082 | A | 5 | T110A822J050AS | 0.1 | 2 | 5053 | 5253 | 5453 | 5653 | 6131 | 7131 | 8131 | T212A822J050(2)S |
| 0.0082 | A | 10 | T110A822K050AS | 0.1 | 2 | 2319 | 2559 | 2799 | 3039 | 6132 | 7132 | 8132 | T212A822K050(2)S |
| 0.0082 | A | 20 | T110A822M050AS | 0.1 | 2 | | | | | | | | |
| 0.01 | A | 5 | T110A103J050AS | 0.1 | 2 | 5054 | 5254 | 5454 | 5654 | 6133 | 7133 | 8133 | T212A103J050(2)S |
| 0.01 | A | 10 | T110A103K050AS | 0.1 | 2 | 2320 | 2560 | 2800 | 3040 | 6134 | 7134 | 8134 | T212A103K050(2)S |
| 0.01 | A | 20 | T110A103M050AS | 0.1 | 2 | 2321 | 2561 | 2801 | 3041 | 6135 | 7135 | 8135 | T212A103M050(2)S |
| 0.012 | A | 5 | T110A123J050AS | 0.1 | 2 | 5055 | 5255 | 5455 | 5655 | 6136 | 7136 | 8136 | T212A123J050(2)S |
| 0.012 | A | 10 | T110A123K050AS | 0.1 | 2 | 2322 | 2562 | 2802 | 3042 | 6137 | 7137 | 8137 | T212A123K050(2)S |
| 0.012 | A | 20 | T110A123M050AS | 0.1 | 2 | | | | | | | | |
| 0.015 | A | 5 | T110A153J050AS | 0.1 | 2 | 5056 | 5256 | 5456 | 5656 | 6138 | 7138 | 8138 | T212A153J050(2)S |
| 0.015 | A | 10 | T110A153K050AS | 0.1 | 2 | 2323 | 2563 | 2803 | 3043 | 6139 | 7139 | 8139 | T212A153K050(2)S |
| 0.015 | A | 20 | T110A153M050AS | 0.1 | 2 | 2324 | 2564 | 2804 | 3044 | 6140 | 7140 | 8140 | T212A153M050(2)S |
| 0.018 | A | 5 | T110A183J050AS | 0.1 | 2 | 5057 | 5257 | 5457 | 5657 | 6141 | 7141 | 8141 | T212A183J050(2)S |
| 0.018 | A | 10 | T110A183K050AS | 0.1 | 2 | 2325 | 2565 | 2805 | 3045 | 6142 | 7142 | 8142 | T212A183K050(2)S |
| 0.018 | A | 20 | T110A183M050AS | 0.1 | 2 | | | | | | | | |
| 0.022 | A | 5 | T110A223J050AS | 0.1 | 2 | 5058 | 5258 | 5458 | 5658 | 6143 | 7143 | 8143 | T212A223J050(2)S |
| 0.022 | A | 10 | T110A223K050AS | 0.1 | 2 | 2326 | 2566 | 2806 | 3046 | 6144 | 7144 | 8144 | T212A223K050(2)S |
| 0.022 | A | 20 | T110A223M050AS | 0.1 | 2 | 2327 | 2567 | 2807 | 3047 | 6145 | 7145 | 8145 | T212A223M050(2)S |
| 0.027 | A | 5 | T110A273J050AS | 0.1 | 2 | 5059 | 5259 | 5459 | 5659 | 6146 | 7146 | 8146 | T212A273J050(2)S |
| 0.027 | A | 10 | T110A273K050AS | 0.1 | 2 | 2328 | 2568 | 2808 | 3048 | 6147 | 7147 | 8147 | T212A273K050(2)S |
| 0.027 | A | 20 | T110A273M050AS | 0.1 | 2 | | | | | | | | |
| 0.033 | A | 5 | T110A333J050AS | 0.1 | 2 | 5060 | 5260 | 5460 | 5660 | 6148 | 7148 | 8148 | T212A333J050(2)S |
| 0.033 | A | 10 | T110A333K050AS | 0.1 | 2 | 2329 | 2569 | 2809 | 3049 | 6149 | 7149 | 8149 | T212A333K050(2)S |
| 0.033 | A | 20 | T110A333M050AS | 0.1 | 2 | 2330 | 2570 | 2810 | 3050 | 6150 | 7150 | 8150 | T212A333M050(2)S |
| 0.039 | A | 5 | T110A393J050AS | 0.1 | 2 | 5061 | 5261 | 5461 | 5661 | 6151 | 7151 | 8151 | T212A393J050(2)S |
| 0.039 | A | 10 | T110A393K050AS | 0.1 | 2 | 2331 | 2571 | 2811 | 3051 | 6152 | 7152 | 8152 | T212A393K050(2)S |
| 0.039 | A | 20 | T110A393M050AS | 0.1 | 2 | | | | | | | | |
| 0.047 | A | 5 | T110A473J050AS | 0.1 | 2 | 5062 | 5262 | 5462 | 5662 | 6153 | 7153 | 8153 | T212A473J050(2)S |
| 0.047 | A | 10 | T110A473K050AS | 0.1 | 2 | 2332 | 2572 | 2812 | 3052 | 6154 | 7154 | 8154 | T212A473K050(2)S |
| 0.047 | A | 20 | T110A473M050AS | 0.1 | 2 | 2333 | 2573 | 2813 | 3053 | 6155 | 7155 | 8155 | T212A473M050(2)S |
| 0.056 | A | 5 | T110A563J050AS | 0.1 | 2 | 5063 | 5263 | 5463 | 5663 | 6156 | 7156 | 8156 | T212A563J050(2)S |
| 0.056 | A | 10 | T110A563K050AS | 0.1 | 2 | 2334 | 2574 | 2814 | 3054 | 6157 | 7157 | 8157 | T212A563K050(2)S |
| 0.056 | A | 20 | T110A563M050AS | 0.1 | 2 | | | | | | | | |
| 0.068 | A | 5 | T110A683J050AS | 0.1 | 2 | 5064 | 5264 | 5464 | 5664 | 6158 | 7158 | 8158 | T212A683J050(2)S |
| 0.068 | A | 10 | T110A683K050AS | 0.1 | 2 | 2335 | 2575 | 2815 | 3055 | 6159 | 7159 | 8159 | T212A683K050(2)S |
| 0.068 | A | 20 | T110A683M050AS | 0.1 | 2 | 2336 | 2576 | 2816 | 3056 | 6160 | 7160 | 8160 | T212A683M050(2)S |
| 0.082 | A | 5 | T110A823J050AS | 0.1 | 2 | 5065 | 5265 | 5465 | 5665 | 6161 | 7161 | 8161 | T212A823J050(2)S |
| 0.082 | A | 10 | T110A823K050AS | 0.1 | 2 | 2337 | 2577 | 2817 | 3057 | 6162 | 7162 | 8162 | T212A823K050(2)S |
| 0.082 | A | 20 | T110A823M050AS | 0.1 | 2 | | | | | | | | |
| 0.1 | A | 5 | T110A104J050AS | 0.3 | 2 | 5066 | 5266 | 5466 | 5666 | 6163 | 7163 | 8163 | T212A104J050(2)S |
| 0.1 | A | 10 | T110A104K050AS | 0.3 | 2 | 2338 | 2578 | 2818 | 3058 | 6164 | 7164 | 8164 | T212A104K050(2)S |
| 0.1 | A | 20 | T110A104M050AS | 0.3 | 2 | 2339 | 2579 | 2819 | 3059 | 6165 | 7165 | 8165 | T212A104M050(2)S |
| 0.12 | A | 5 | T110A124J050AS | 0.3 | 2 | 5067 | 5267 | 5467 | 5667 | 6166 | 7166 | 8166 | T212A124J050(2)S |
| 0.12 | A | 10 | T110A124K050AS | 0.3 | 2 | 2340 | 2580 | 2820 | 3060 | 6167 | 7167 | 8167 | T212A124K050(2)S |
| 0.12 | A | 20 | T110A124M050AS | 0.3 | 2 | | | | | | | | |
| 0.15 | A | 5 | T110A154J050AS | 0.3 | 2 | 5068 | 5268 | 5468 | 5668 | 6168 | 7168 | 8168 | T212A154J050(2)S |
| 0.15 | A | 10 | T110A154K050AS | 0.3 | 2 | 2341 | 2581 | 2821 | 3061 | 6169 | 7169 | 8169 | T212A154K050(2)S |
| 0.15 | A | 20 | T110A154M050AS | 0.3 | 2 | 2342 | 2582 | 2822 | 3062 | 6170 | 7170 | 8170 | T212A154M050(2)S |
| 0.18 | A | 5 | T110A184J050AS | 0.3 | 2 | 5069 | 5269 | 5469 | 5669 | 6171 | 7171 | 8171 | T212A184J050(2)S |
| 0.18 | A | 10 | T110A184K050AS | 0.3 | 2 | 2343 | 2583 | 2823 | 3063 | 6172 | 7172 | 8172 | T212A184K050(2)S |
| 0.18 | A | 20 | T110A184M050AS | 0.3 | 2 | | | | | | | | |
| 0.22 | A | 5 | T110A224J050AS | 0.3 | 2 | 5070 | 5270 | 5470 | 5670 | 6173 | 7173 | 8173 | T212A224J050(2)S |
| 0.22 | A | 10 | T110A224K050AS | 0.3 | 2 | 2344 | 2584 | 2824 | 3064 | 6174 | 7174 | 8174 | T212A224K050(2)S |
| 0.22 | A | 20 | T110A224M050AS | 0.3 | 2 | 2345 | 2585 | 2825 | 3065 | 6175 | 7175 | 8175 | T212A224M050(2)S |
| 0.27 | A | 5 | T110A274J050AS | 0.3 | 2 | 5071 | 5271 | 5471 | 5671 | 6176 | 7176 | 8176 | T212A274J050(2)S |
| 0.27 | A | 10 | T110A274K050AS | 0.3 | 2 | 2346 | 2586 | 2826 | 3066 | 6177 | 7177 | 8177 | T212A274K050(2)S |
| 0.27 | A | 20 | T110A274M050AS | 0.3 | 2 | | | | | | | | |
| 0.33 | A | 5 | T110A334J050AS | 0.3 | 2 | 5072 | 5272 | 5472 | 5672 | 6178 | 7178 | 8178 | T212A334J050(2)S |
| 0.33 | A | 10 | T110A334K050AS | 0.3 | 2 | 2347 | 2587 | 2827 | 3067 | 6179 | 7179 | 8179 | T212A334K050(2)S |
| 0.33 | A | 20 | T110A334M050AS | 0.3 | 2 | 2348 | 2588 | 2828 | 3068 | 6180 | 7180 | 8180 | T212A334M050(2)S |
| 0.39 | A | 5 | T110A394J050AS | 0.3 | 2 | 5073 | 5273 | 5473 | 5673 | 6181 | 7181 | 8181 | T212A394J050(2)S |

(1) To complete T110 Series part number, insert Capacitance Tolerance Symbol in the 9th Character as shown on Page 6.
(2) To complete the T212 Series Part Number, insert Failure Rate Symbol in the 13th Character.
**Bold Face** lines indicate popular part types and values.

## RATINGS & PART NUMBER REFERENCE

| CAPACITANCE µF | CASE SIZE | CAPACITANCE TOLERANCE ±% | KEMET T110 KEMET PART NUMBER | D.C. LEAKAGE µA@25°C MAX. | MAX. DISSIPATION FACTOR %@25°C, 120Hz | MIL-PRF-39003 (CSR13) CAPACITORS — DASH NUMBER REFERENCE FAILURE RATE LEVEL (%/1000 HRS.) — MIL-PRF-39003/1H EXPONENTIAL M (1.0) | P (0.1) | R (0.01) | S (0.001) | MIL-PRF-39003/1H GRADED B (0.1) | C (0.01) | D (0.001) | KEMET EQUIVALENT MILITARY PART NUMBER |
|---|---|---|---|---|---|---|---|---|---|---|---|---|---|
| **50 VOLT RATING AT 85°C — 33 VOLT RATING AT 125°C (Cont'd)** | | | | | | | | | | | | | |
| 0.39 | A | 10 | T110A394K050AS | 0.3 | 2 | 2349 | 2589 | 2829 | 3069 | 6182 | 7182 | 8182 | T212A394K050(2)S |
| 0.39 | A | 20 | T110A394M050AS | 0.3 | 2 | | | | | | | | |
| **0.47** | **A** | **5** | **T110A474J050AS** | **0.3** | **2** | **5074** | **5274** | **5474** | **5674** | **6183** | **7183** | **8183** | **T212A474J050(2)S** |
| **0.47** | **A** | **10** | **T110A474K050AS** | **0.3** | **2** | **2350** | **2590** | **2830** | **3070** | **6184** | **7184** | **8184** | **T212A474K050(2)S** |
| **0.47** | **A** | **20** | **T110A474M050AS** | **0.3** | **2** | **2351** | **2591** | **2831** | **3071** | **6185** | **7185** | **8185** | **T212A474M050(2)S** |
| 0.56 | A | 5 | T110A564J050AS | 0.3 | 2 | 5075 | 5275 | 5475 | 5675 | 6186 | 7186 | 8186 | T212A564J050(2)S |
| 0.56 | A | 10 | T110A564K050AS | 0.3 | 2 | 2352 | 2592 | 2832 | 3072 | 6187 | 7187 | 8187 | T212A564K050(2)S |
| 0.56 | A | 20 | T110A564M050AS | 0.3 | 2 | | | | | | | | |
| **0.68** | **A** | **5** | **T110A684J050AS** | **0.3** | **2** | **5076** | **5276** | **5476** | **5676** | **6188** | **7188** | **8188** | **T212A684J050(2)S** |
| **0.68** | **A** | **10** | **T110A684K050AS** | **0.3** | **2** | **2353** | **2593** | **2833** | **3073** | **6189** | **7189** | **8189** | **T212A684K050(2)S** |
| **0.68** | **A** | **20** | **T110A684M050AS** | **0.3** | **2** | **2354** | **2594** | **2834** | **3074** | **6190** | **7190** | **8190** | **T212A684M050(2)S** |
| 0.82 | A | 5 | T110A824J050AS | 0.3 | 2 | 5077 | 5277 | 5477 | 5677 | 6191 | 7191 | 8191 | T212A824J050(2)S |
| 0.82 | A | 10 | T110A824K050AS | 0.3 | 2 | 2355 | 2595 | 2835 | 3075 | 6192 | 7192 | 8192 | T212A824K050(2)S |
| 0.82 | A | 20 | T110A824M050AS | 0.3 | 2 | | | | | | | | |
| **1.0** | **A** | **5** | **T110A105J050AS** | **0.4** | **2** | **5078** | **5278** | **5478** | **5678** | **6193** | **7193** | **8193** | **T212A105J050(2)S** |
| **1.0** | **A** | **10** | **T110A105K050AS** | **0.4** | **2** | **2356** | **2596** | **2836** | **3076** | **6194** | **7194** | **8194** | **T212A105K050(2)S** |
| **1.0** | **A** | **20** | **T110A105M050AS** | **0.4** | **2** | **2357** | **2597** | **2837** | **3077** | **6195** | **7195** | **8195** | **T212A105M050(2)S** |
| 1.2 | B | 5 | T110B125J050AS | 0.4 | 4 | 5079 | 5279 | 5479 | 5679 | 6196 | 7196 | 8196 | T212B125J050(2)S |
| 1.2 | B | 10 | T110B125K050AS | 0.4 | 4 | 2358 | 2598 | 2838 | 3078 | 6197 | 7197 | 8197 | T212B125K050(2)S |
| 1.2 | B | 20 | T110B125M050AS | 0.4 | 4 | | | | | | | | |
| 1.5 | B | 5 | T110B155J050AS | 0.5 | 4 | 5080 | 5280 | 5480 | 5680 | 6198 | 7198 | 8198 | T212B155J050(2)S |
| 1.5 | B | 10 | T110B155K050AS | 0.5 | 4 | 2359 | 2599 | 2839 | 3079 | 6199 | 7199 | 8199 | T212B155K050(2)S |
| 1.5 | B | 20 | T110B155M050AS | 0.5 | 4 | 2360 | 2600 | 2840 | 3080 | 6200 | 7200 | 8200 | T212B155M050(2)S |
| 1.8 | B | 5 | T110B185J050AS | 0.5 | 4 | 5081 | 5281 | 5481 | 5681 | 6201 | 7201 | 8201 | T212B185J050(2)S |
| 1.8 | B | 10 | T110B185K050AS | 0.5 | 4 | 2361 | 2601 | 2841 | 3081 | 6202 | 7202 | 8202 | T212B185K050(2)S |
| 1.8 | B | 20 | T110B185M050AS | 0.5 | 4 | | | | | | | | |
| **2.2** | **B** | **5** | **T110B225J050AS** | **0.8** | **4** | **5082** | **5282** | **5482** | **5682** | **6203** | **7203** | **8203** | **T212B225J050(2)S** |
| **2.2** | **B** | **10** | **T110B225K050AS** | **0.8** | **4** | **2362** | **2602** | **2842** | **3082** | **6204** | **7204** | **8204** | **T212B225K050(2)S** |
| **2.2** | **B** | **20** | **T110B225M050AS** | **0.8** | **4** | **2363** | **2603** | **2843** | **3083** | **6205** | **7205** | **8205** | **T212B225M050(2)S** |
| 2.7 | B | 5 | T110B275J050AS | 0.8 | 4 | 5083 | 5283 | 5483 | 5683 | 6206 | 7206 | 8206 | T212B275J050(2)S |
| 2.7 | B | 10 | T110B275K050AS | 0.8 | 4 | 2364 | 2604 | 2844 | 3084 | 6207 | 7207 | 8207 | T212B275K050(2)S |
| 2.7 | B | 20 | T110B275M050AS | 0.8 | 4 | | | | | | | | |
| 3.3 | B | 5 | T110B335J050AS | 1.2 | 4 | 5084 | 5284 | 5484 | 5684 | 6208 | 7208 | 8208 | T212B335J050(2)S |
| 3.3 | B | 10 | T110B335K050AS | 1.2 | 4 | 2365 | 2605 | 2845 | 3085 | 6209 | 7209 | 8209 | T212B335K050(2)S |
| 3.3 | B | 20 | T110B335M050AS | 1.2 | 4 | 2366 | 2606 | 2846 | 3086 | 6210 | 7210 | 8210 | T212B335M050(2)S |
| 3.9 | B | 5 | T110B395J050AS | 1.5 | 4 | 5085 | 5285 | 5485 | 5685 | 6211 | 7211 | 8211 | T212B395J050(2)S |
| 3.9 | B | 10 | T110B395K050AS | 1.5 | 4 | 2367 | 2607 | 2847 | 3087 | 6212 | 7212 | 8212 | T212B395K050(2)S |
| 3.9 | B | 20 | T110B395M050AS | 1.5 | 4 | | | | | | | | |
| **4.7** | **B** | **5** | **T110B475J050AS** | **1.7** | **4** | **5086** | **5286** | **5486** | **5686** | **6213** | **7213** | **8213** | **T212B475J050(2)S** |
| **4.7** | **B** | **10** | **T110B475K050AS** | **1.7** | **4** | **2368** | **2608** | **2848** | **3088** | **6214** | **7214** | **8214** | **T212B475K050(2)S** |
| **4.7** | **B** | **20** | **T110B475M050AS** | **1.7** | **4** | **2369** | **2609** | **2849** | **3089** | **6215** | **7215** | **8215** | **T212B475M050(2)S** |
| 5.6 | C | 5 | T110C565J050AS | 2.2 | 4 | 5087 | 5287 | 5487 | 5687 | 6216 | 7216 | 8216 | T212C565J050(2)S |
| 5.6 | C | 10 | T110C565K050AS | 2.2 | 4 | 2370 | 2610 | 2850 | 3090 | 6217 | 7217 | 8217 | T212C565K050(2)S |
| 5.6 | C | 20 | T110C565M050AS | 2.2 | 4 | | | | | | | | |
| 6.8 | C | 5 | T110C685J050AS | 2.2 | 4 | 5088 | 5288 | 5488 | 5688 | 6218 | 7218 | 8218 | T212C685J050(2)S |
| 6.8 | C | 10 | T110C685K050AS | 2.2 | 4 | 2371 | 2611 | 2851 | 3091 | 6219 | 7219 | 8219 | T212C685K050(2)S |
| 6.8 | C | 20 | T110C685M050AS | 2.2 | 4 | 2372 | 2612 | 2852 | 3092 | 6220 | 7220 | 8220 | T212C685M050(2)S |
| 8.2 | C | 5 | T110C825J050AS | 2.5 | 4 | 5089 | 5289 | 5489 | 5689 | 6221 | 7221 | 8221 | T212C825J050(2)S |
| 8.2 | C | 10 | T110C825K050AS | 2.5 | 4 | 2373 | 2613 | 2853 | 3093 | 6222 | 7222 | 8222 | T212C825K050(2)S |
| 8.2 | C | 20 | T110C825M050AS | 2.5 | 4 | | | | | | | | |
| 10.0 | C | 5 | T110C106J050AS | 2.5 | 4 | 5090 | 5290 | 5490 | 5690 | 6223 | 7223 | 8223 | T212C106J050(2)S |
| 10.0 | C | 10 | T110C106K050AS | 2.5 | 4 | 2374 | 2614 | 2854 | 3094 | 6224 | 7224 | 8224 | T212C106K050(2)S |
| 10.0 | C | 20 | T110C106M050AS | 2.5 | 4 | 2375 | 2615 | 2855 | 3095 | 6225 | 7225 | 8225 | T212C106M050(2)S |
| 12.0 | C | 5 | T110C126J050AS | 3.0 | 4 | 5091 | 5291 | 5491 | 5691 | 6226 | 7226 | 8226 | T212C126J050(2)S |
| 12.0 | C | 10 | T110C126K050AS | 3.0 | 4 | 2376 | 2616 | 2856 | 3096 | 6227 | 7227 | 8227 | T212C126K050(2)S |
| 12.0 | C | 20 | T110C126M050AS | 3.0 | 4 | | | | | | | | |
| 15.0 | C | 5 | T110C156J050AS | 4.0 | 4 | 5092 | 5292 | 5492 | 5692 | 6228 | 7228 | 8228 | T212C156J050(2)S |
| 15.0 | C | 10 | T110C156K050AS | 4.0 | 4 | 2377 | 2617 | 2857 | 3097 | 6229 | 729 | 8229 | T212C156K050(2)S |
| 15.0 | C | 20 | T110C156M050AS | 4.0 | 4 | 2378 | 2618 | 2858 | 3098 | 6230 | 7230 | 8230 | T212C156M050(2)S |
| 18.0 | C | 5 | T110C186J050AS | 4.5 | 4 | 5093 | 5293 | 5493 | 5693 | 6231 | 7231 | 8231 | T212C186J050(2)S |

(1) To complete T110 Series part number, insert Capacitance Tolerance Symbol in the 9th Character as shown on Page 6.
(2) To complete the T212 Series Part Number, insert Failure Rate Symbol in the 13th Character.
**Bold Face** lines indicate popular part type and values.

## RATINGS & PART NUMBER REFERENCE

| CAPACITANCE µF | CASE SIZE | CAPACITANCE TOLERANCE ±% | KEMET T110 KEMET PART NUMBER | D.C. LEAKAGE µA@25°C MAX. | MAX. DISSIPATION FACTOR %@25°C, 120Hz | MIL-PRF-39003 (CSR13) CAPACITORS — DASH NUMBER REFERENCE FAILURE RATE LEVEL (%/1000 HRS.) — MIL-PRF-39003/1H EXPONENTIAL M (1.0) | P (0.1) | R (0.01) | S (0.001) | MIL-PRF-39003/1H GRADED B (0.1) | C (0.01) | D (0.001) | KEMET EQUIVALENT MILITARY PART NUMBER |
|---|---|---|---|---|---|---|---|---|---|---|---|---|---|
| **50 VOLT RATING AT 85°C — 33 VOLT RATING AT 125°C (Cont'd)** | | | | | | | | | | | | | |
| 18.0 | C | 10 | T110C186K050AS | 4.5 | 4 | 2379 | 2619 | 2859 | 3099 | 6232 | 7232 | 8232 | T212C186K050(2)S |
| 18.0 | C | 20 | T110C186M050AS | 4.5 | 4 | | | | | | | | |
| **22.0** | **D** | **5** | **T110D226J050AS** | **5.5** | **4** | **5094** | **5294** | **5494** | **5694** | **6233** | **7233** | **8233** | **T212D226J050(2)S** |
| **22.0** | **D** | **10** | **T110D226K050AS** | **5.5** | **4** | **2380** | **2620** | **2860** | **3100** | **6234** | **7234** | **8234** | **T212D226K050(2)S** |
| **22.0** | **D** | **20** | **T110D226M050AS** | **5.5** | **4** | **2381** | **2621** | **2861** | **3101** | **6235** | **7235** | **8235** | **T212D226M050(2)S** |
| **60 VOLT RATING AT 85°C — 40 VOLT RATING AT 125°C** | | | | | | | | | | | | | |
| 0.0047 | A | 5,10,20 | T110A472(1)060AS | 0.3 | 3 | | | | | | | | |
| 0.0056 | A | 5,10,20 | T110A562(1)060AS | 0.3 | 3 | | | | | | | | |
| 0.0068 | A | 5,10,20 | T110A682(1)060AS | 0.3 | 3 | | | | | | | | |
| 0.0082 | A | 5,10,20 | T110A822(1)060AS | 0.3 | 3 | | | | | | | | |
| 0.01 | A | 5,10,20 | T110A103(1)060AS | 0.3 | 3 | | | | | | | | |
| 0.012 | A | 5,10,20 | T110A123(1)060AS | 0.3 | 3 | | | | | | | | |
| 0.015 | A | 5,10,20 | T110A153(1)060AS | 0.3 | 3 | | | | | | | | |
| 0.018 | A | 5,10,20 | T110A183(1)060AS | 0.3 | 3 | | | | | | | | |
| 0.022 | A | 5,10,20 | T110A223(1)060AS | 0.3 | 3 | | | | | | | | |
| 0.027 | A | 5,10,20 | T110A273(1)060AS | 0.3 | 3 | | | | | | | | |
| 0.033 | A | 5,10,20 | T110A333(1)060AS | 0.3 | 3 | | | | | | | | |
| 0.039 | A | 5,10,20 | T110A393(1)060AS | 0.3 | 3 | | | | | | | | |
| 0.047 | A | 5,10,20 | T110A473(1)060AS | 0.3 | 3 | | | | | | | | |
| 0.056 | A | 5,10,20 | T110A563(1)060AS | 0.3 | 3 | | | | | | | | |
| 0.068 | A | 5,10,20 | T110A683(1)060AS | 0.3 | 3 | | | | | | | | |
| 0.082 | A | 5,10,20 | T110A823(1)060AS | 0.3 | 3 | | | | | | | | |
| 0.1 | A | 5,10,20 | T110A104(1)060AS | 0.5 | 3 | | | | | | | | |
| 0.12 | A | 5,10,20 | T110A124(1)060AS | 0.5 | 3 | | | | | | | | |
| 0.15 | A | 5,10,20 | T110A154(1)060AS | 0.5 | 3 | | | | | | | | |
| 0.18 | A | 5,10,20 | T110A184(1)060AS | 0.5 | 3 | | | | | | | | |
| 0.22 | A | 5,10,20 | T110A224(1)060AS | 0.5 | 3 | | | | | | | | |
| 0.27 | A | 5,10,20 | T110A274(1)060AS | 0.5 | 3 | | | | | | | | |
| 0.33 | A | 5,10,20 | T110A334(1)060AS | 0.5 | 3 | | | | | | | | |
| 0.39 | A | 5,10,20 | T110A394(1)060AS | 0.5 | 3 | | | | | | | | |
| 0.47 | A | 5,10,20 | T110A474(1)060AS | 0.5 | 3 | | | | | | | | |
| 0.56 | A | 5,10,20 | T110A564(1)060AS | 0.5 | 3 | | | | | | | | |
| 0.68 | A | 5,10,20 | T110A684(1)060AS | 0.5 | 3 | | | | | | | | |
| 0.82 | B | 5,10,20 | T110B824(1)060AS | 0.5 | 3 | | | | | | | | |
| 1.0 | B | 5,10,20 | T110B105(1)060AS | 0.5 | 3 | | | | | | | | |
| 1.2 | B | 5,10,20 | T110B125(1)060AS | 0.5 | 4 | | | | | | | | |
| 1.5 | B | 5,10,20 | T110B155(1)060AS | 0.5 | 4 | | | | | | | | |
| 1.8 | B | 5,10,20 | T110B185(1)060AS | 0.5 | 4 | | | | | | | | |
| 2.2 | B | 5,10,20 | T110B225(1)060AS | 1.0 | 4 | | | | | | | | |
| 2.7 | B | 5,10,20 | T110B275(1)060AS | 1.0 | 4 | | | | | | | | |
| 3.3 | B | 5,10,20 | T110B335(1)060AS | 1.5 | 4 | | | | | | | | |
| 3.9 | B | 5,10,20 | T110B395(1)060AS | 1.5 | 4 | | | | | | | | |
| 4.7 | C | 5,10,20 | T110C475(1)060AS | 2.0 | 4 | | | | | | | | |
| 5.6 | C | 5,10,20 | T110C565(1)060AS | 2.0 | 4 | | | | | | | | |
| 6.8 | C | 5,10,20 | T110C685(1)060AS | 3.0 | 4 | | | | | | | | |
| 8.2 | C | 5,10,20 | T110C825(1)060AS | 4.0 | 4 | | | | | | | | |
| 10.0 | C | 5,10,20 | T110C106(1)060AS | 5.0 | 4 | | | | | | | | |
| 12.0 | C | 5,10,20 | T110C126(1)060AS | 5.0 | 4 | | | | | | | | |
| 15.0 | D | 5,10,20 | T110D156(1)060AS | 4.0 | 4 | | | | | | | | |
| 18.0 | D | 5,10,20 | T110D186(1)060AS | 5.0 | 4 | | | | | | | | |
| 22.0 | D | 5,10,20 | T110D226(1)060AS | 6.0 | 4 | | | | | | | | |
| **75 VOLT RATING AT 85°C — 50 VOLT RATING AT 125°C** | | | | | | | | | | | | | |
| 0.0047 | A | 5,10,20 | T110A472(1)075AS | 0.3 | 2 | | | | | | | | |
| 0.0056 | A | 5,10,20 | T110A562(1)075AS | 0.3 | 2 | | | | | | | | |
| 0.0068 | A | 5,10,20 | T110A682(1)075AS | 0.3 | 2 | | | | | | | | |
| 0.0082 | A | 5,10,20 | T110A822(1)075AS | 0.3 | 2 | | | | | | | | |
| 0.01 | A | 5,10,20 | T110A103(1)075AS | 0.3 | 2 | | | | | | | | |

(1) To complete T110 Series part number, insert Capacitance Tolerance Symbol in the 9th Character as shown on Page 6.
(2) To complete the T212 Series Part Number, insert Failure Rate Symbol in the 13th Character.
**Bold Face** lines indicate popular part types and values.

## RATINGS & PART NUMBER REFERENCE

| CAPACITANCE µF | CASE SIZE | CAPACITANCE TOLERANCE ±% | KEMET T110 KEMET PART NUMBER | D.C. LEAKAGE µA@25°C MAX. | MAX. DISSIPATION FACTOR %@25°C, 120Hz | MIL-PRF-39003 (CSR13) CAPACITORS — DASH NUMBER REFERENCE FAILURE RATE LEVEL (%/1000 HRS.) — MIL-PRF-39003/1H EXPONENTIAL M (1.0) | P (0.1) | R (0.01) | S (0.001) | MIL-PRF-39003/1H GRADED B (0.1) | C (0.01) | D (0.001) | KEMET EQUIVALENT MILITARY PART NUMBER |
|---|---|---|---|---|---|---|---|---|---|---|---|---|---|
| **75 VOLT RATING AT 85°C — 50 VOLT RATING AT 125°C (Cont'd)** | | | | | | | | | | | | | |
| 0.012 | A | 5,10,20 | T110A123(1)075AS | 0.3 | 2 | | | | | | | | |
| 0.015 | A | 5,10,20 | T110A153(1)075AS | 0.3 | 2 | | | | | | | | |
| 0.018 | A | 5,10,20 | T110A183(1)075AS | 0.3 | 2 | | | | | | | | |
| 0.022 | A | 5,10,20 | T110A223(1)075AS | 0.3 | 2 | | | | | | | | |
| 0.027 | A | 5,10,20 | T110A273(1)075AS | 0.3 | 2 | | | | | | | | |
| 0.033 | A | 5,10,20 | T110A333(1)075AS | 0.3 | 2 | | | | | | | | |
| 0.039 | A | 5,10,20 | T110A393(1)075AS | 0.3 | 2 | | | | | | | | |
| 0.047 | A | 5,10,20 | T110A473(1)075AS | 0.3 | 2 | | | | | | | | |
| 0.056 | A | 5,10,20 | T110A563(1)075AS | 0.3 | 2 | | | | | | | | |
| 0.068 | A | 5,10,20 | T110A683(1)075AS | 0.3 | 2 | | | | | | | | |
| 0.082 | A | 5,10,20 | T110A823(1)075AS | 0.3 | 2 | | | | | | | | |
| 0.1 | A | 5 | T110A104J075AS | 0.3 | 2 | 5095 | 5295 | 5495 | 5695 | 6236 | 7236 | 8236 | T212A104J075(2)S |
| 0.1 | A | 10 | T110A104K075AS | 0.3 | 2 | 2382 | 2622 | 2862 | 3102 | 6237 | 7237 | 8237 | T212A104K075(2)S |
| 0.1 | A | 20 | T110A104M075AS | 0.3 | 2 | 2383 | 2623 | 2863 | 3103 | 6238 | 7238 | 8238 | T212A104M075(2)S |
| 0.12 | A | 5 | T110A124J075AS | 0.3 | 2 | 5096 | 5296 | 5496 | 5696 | 6239 | 7239 | 8239 | T212A124J075(2)S |
| 0.12 | A | 10 | T110A124K075AS | 0.3 | 2 | 2384 | 2624 | 2864 | 3104 | 6240 | 7240 | 8240 | T212A124K075(2)S |
| 0.12 | A | 20 | T110A124M075AS | 0.3 | 2 | | | | | | | | |
| 0.15 | A | 5 | T110A154J075AS | 0.3 | 2 | 5097 | 5297 | 5497 | 5697 | 6241 | 7241 | 8241 | T212A154J075(2)S |
| 0.15 | A | 10 | T110A154K075AS | 0.3 | 2 | 2385 | 2625 | 2865 | 3105 | 6242 | 7242 | 8242 | T212A154K075(2)S |
| 0.15 | A | 20 | T110A154M075AS | 0.3 | 2 | 2386 | 2626 | 2866 | 3106 | 6243 | 7243 | 8243 | T212A154M075(2)S |
| 0.18 | A | 5 | T110A184J075AS | 0.3 | 2 | 5098 | 5298 | 5498 | 5698 | 6244 | 7244 | 8244 | T212A184J075(2)S |
| 0.18 | A | 10 | T110A184K075AS | 0.3 | 2 | 2387 | 2627 | 2867 | 3107 | 6245 | 7245 | 8245 | T212A184K075(2)S |
| 0.18 | A | 20 | T110A184M075AS | 0.3 | 2 | | | | | | | | |
| 0.22 | A | 5 | T110A224J075AS | 0.3 | 2 | 5099 | 5299 | 5499 | 5699 | 6246 | 7246 | 8246 | T212A224J075(2)S |
| 0.22 | A | 10 | T110A224K075AS | 0.3 | 2 | 2388 | 2628 | 2868 | 3108 | 6247 | 7247 | 8247 | T212A224K075(2)S |
| 0.22 | A | 20 | T110A224M075AS | 0.3 | 2 | 2389 | 2629 | 2869 | 3109 | 6248 | 7248 | 8248 | T212A224M075(2)S |
| 0.27 | A | 5 | T110A274J075AS | 0.3 | 2 | 5100 | 5300 | 5500 | 5700 | 6249 | 7249 | 8249 | T212A274J075(2)S |
| 0.27 | A | 10 | T110A274K075AS | 0.3 | 2 | 2390 | 2630 | 2870 | 3110 | 6250 | 7250 | 8250 | T212A274K075(2)S |
| 0.27 | A | 20 | T110A274M075AS | 0.3 | 2 | | | | | | | | |
| 0.33 | A | 5 | T110A334J075AS | 0.3 | 2 | 5101 | 5301 | 5501 | 5701 | 6251 | 7251 | 8251 | T212A334J075(2)S |
| 0.33 | A | 10 | T110A334K075AS | 0.3 | 2 | 2391 | 2631 | 2871 | 3111 | 6252 | 7252 | 8252 | T212A334K075(2)S |
| 0.33 | A | 20 | T110A334M075AS | 0.3 | 2 | 2392 | 2632 | 2872 | 3112 | 6253 | 7253 | 8253 | T212A334M075(2)S |
| 0.39 | A | 5 | T110A394J075AS | 0.3 | 2 | 5102 | 5302 | 5502 | 5702 | 6254 | 7254 | 8254 | T212A394J075(2)S |
| 0.39 | A | 10 | T110A394K075AS | 0.3 | 2 | 2393 | 2633 | 2873 | 3113 | 6255 | 7255 | 8255 | T212A394K075(2)S |
| 0.39 | A | 20 | T110A394M075AS | 0.3 | 2 | | | | | | | | |
| 0.47 | A | 5 | T110A474J075AS | 0.3 | 2 | 5103 | 5303 | 5503 | 5703 | 6256 | 7256 | 8256 | T212A474J075(2)S |
| 0.47 | A | 10 | T110A474K075AS | 0.3 | 2 | 2394 | 2634 | 2874 | 3114 | 6257 | 7257 | 8257 | T212A474K075(2)S |
| 0.47 | A | 20 | T110A474M075AS | 0.3 | 2 | 2395 | 2635 | 2875 | 3115 | 6258 | 7258 | 8258 | T212A474M075(2)S |
| 0.56 | A | 5 | T110A564J075AS | 0.3 | 2 | 5104 | 5304 | 5504 | 5704 | 6259 | 7259 | 8259 | T212A564J075(2)S |
| 0.56 | A | 10 | T110A564K075AS | 0.3 | 2 | 2396 | 2636 | 2876 | 3116 | 6260 | 7260 | 8260 | T212A564K075(2)S |
| 0.56 | A | 20 | T110A564M075AS | 0.3 | 2 | | | | | | | | |
| 0.68 | A | 5 | T110A684J075AS | 0.3 | 2 | 5105 | 5305 | 5505 | 5705 | 6261 | 7261 | 8261 | T212A684J075(2)S |
| 0.68 | A | 10 | T110A684K075AS | 0.3 | 2 | 2397 | 2637 | 2877 | 3117 | 6262 | 7262 | 8262 | T212A684K075(2)S |
| 0.68 | A | 20 | T110A684M075AS | 0.3 | 2 | 2398 | 2638 | 2878 | 3118 | 6263 | 7263 | 8263 | T212A684M075(2)S |
| 0.82 | B | 5 | T110B824J075AS | 0.3 | 2 | 5106 | 5306 | 5506 | 5706 | 6264 | 7264 | 8264 | T212B824J075(2)S |
| 0.82 | B | 10 | T110B824K075AS | 0.3 | 2 | 2399 | 2639 | 2879 | 3119 | 6265 | 7265 | 8265 | T212B824K075(2)S |
| 0.82 | B | 20 | T110B824M075AS | 0.3 | 2 | | | | | | | | |
| 1.0 | B | 5 | T110B105J075AS | 0.3 | 2 | 5107 | 5307 | 5507 | 5707 | 6266 | 7266 | 8266 | T212B105J075(2)S |
| 1.0 | B | 10 | T110B105K075AS | 0.3 | 2 | 2400 | 2640 | 2880 | 3120 | 6267 | 7267 | 8267 | T212B105K075(2)S |
| 1.0 | B | 20 | T110B105M075AS | 0.3 | 2 | 2401 | 2641 | 2881 | 3121 | 6268 | 7268 | 8268 | T212B105M075(2)S |
| 1.2 | B | 5 | T110B125J075AS | 0.3 | 4 | 5108 | 5308 | 5508 | 5708 | 6269 | 7269 | 8269 | T212B125J075(2)S |
| 1.2 | B | 10 | T110B125K075AS | 0.3 | 4 | 2402 | 2642 | 2882 | 3122 | 6270 | 7270 | 8270 | T212B125K075(2)S |
| 1.2 | B | 20 | T110B125M075AS | 0.3 | 4 | | | | | | | | |
| 1.5 | B | 5 | T110B155J075AS | 0.6 | 4 | 5109 | 5309 | 5509 | 5709 | 6271 | 7271 | 8271 | T212B155J075(2)S |
| 1.5 | B | 10 | T110B155K075AS | 0.6 | 4 | 2403 | 2643 | 2883 | 3123 | 6272 | 7272 | 8272 | T212B155K075(2)S |
| 1.5 | B | 20 | T110B155M075AS | 0.6 | 4 | 2404 | 2644 | 2884 | 3124 | 6273 | 7273 | 8273 | T212B155M075(2)S |
| 1.8 | B | 5 | T110B185J075AS | 0.7 | 4 | 5110 | 5310 | 5510 | 5710 | 6274 | 7274 | 8274 | T212B185J075(2)S |
| 1.8 | B | 10 | T110B185K075AS | 0.7 | 4 | 2405 | 2645 | 2885 | 3125 | 6275 | 7275 | 8275 | T212B185K075(2)S |
| 1.8 | B | 20 | T110B185M075AS | 0.7 | 4 | | | | | | | | |
| 2.2 | B | 5 | T110B225J075AS | 0.8 | 4 | 5111 | 5311 | 5511 | 5711 | 6276 | 7276 | 8276 | T212B225J075(2)S |
| 2.2 | B | 10 | T110B225K075AS | 0.8 | 4 | 2406 | 2646 | 2886 | 3126 | 6277 | 7277 | 8277 | T212B225K075(2)S |

(1) To complete T110 Series part number, insert Capacitance Tolerance Symbol in the 9th Character as shown on Page 6.
(2) To complete the T212 Series Part Number, insert Failure Rate Symbol in the 13th Character.
**Bold Face** lines indicate popular part types and values.

## RATINGS & PART NUMBER REFERENCE

| CAPACITANCE µF | CASE SIZE | CAPACITANCE TOLERANCE ±% | KEMET T110 KEMET PART NUMBER | D.C. LEAKAGE µA@25°C MAX. | MAX. DISSIPATION FACTOR %@25°C, 120Hz | MIL-PRF-39003 (CSR13) CAPACITORS — DASH NUMBER REFERENCE FAILURE RATE LEVEL (%/1000 HRS.) — MIL-PRF-39003/1H EXPONENTIAL M (1.0) | P (0.1) | R (0.01) | S (0.001) | MIL-PRF-39003/1H GRADED B (0.1) | C (0.01) | D (0.001) | KEMET EQUIVALENT MILITARY PART NUMBER |
|---|---|---|---|---|---|---|---|---|---|---|---|---|---|
| **75 VOLT RATING AT 85°C — 50 VOLT RATING AT 125°C (Cont'd)** | | | | | | | | | | | | | |
| 2.2 | B | 20 | T110B225M075AS | 0.8 | 4 | 2407 | 2647 | 2887 | 3127 | 6278 | 7278 | 8278 | T212B225M075(2)S |
| 2.7 | B | 5 | T110B275J075AS | 1.0 | 4 | 5112 | 5312 | 5512 | 5712 | 6279 | 7279 | 8279 | T212B275J075(2)S |
| 2.7 | B | 10 | T110B275K075AS | 1.0 | 4 | 2408 | 2648 | 2888 | 3128 | 6280 | 7280 | 8280 | T212B275K075(2)S |
| 2.7 | B | 20 | T110B275M075AS | 1.2 | 4 | | | | | | | | |
| 3.3 | B | 5 | T110B335J075AS | 1.2 | 4 | 5113 | 5313 | 5513 | 5713 | 6281 | 7281 | 8281 | T212B335J075(2)S |
| 3.3 | B | 10 | T110B335K075AS | 1.2 | 4 | 2409 | 2649 | 2889 | 3129 | 6282 | 7282 | 8282 | T212B335K075(2)S |
| 3.3 | B | 20 | T110B335M075AS | 1.2 | 4 | 2410 | 2650 | 2890 | 3130 | 6283 | 7283 | 8283 | T212B335M075(2)S |
| 3.9 | B | 5 | T110B395J075AS | 1.5 | 4 | 5114 | 5314 | 5514 | 5714 | 6284 | 7284 | 8284 | T212B395J075(2)S |
| 3.9 | B | 10 | T110B395K075AS | 1.5 | 4 | 2411 | 2651 | 2891 | 3131 | 6285 | 7285 | 8285 | T212B395K075(2)S |
| 3.9 | B | 20 | T110B395M075AS | 1.5 | 4 | | | | | | | | |
| 4.7 | C | 5 | T110C475J075AS | 3.0 | 4 | 5115 | 5315 | 5515 | 5715 | 6286 | 7286 | 8286 | T212C475J075(2)S |
| 4.7 | C | 10 | T110C475K075AS | 3.0 | 4 | 2412 | 2652 | 2892 | 3132 | 6287 | 7287 | 8287 | T212C475K075(2)S |
| 4.7 | C | 20 | T110C475M075AS | 3.0 | 4 | 2413 | 2653 | 2893 | 3133 | 6288 | 7288 | 8288 | T212C475M075(2)S |
| 5.6 | C | 5 | T110C565J075AS | 3.0 | 4 | 5116 | 5316 | 5516 | 5716 | 6289 | 7289 | 8289 | T212C565J075(2)S |
| 5.6 | C | 10 | T110C565K075AS | 3.0 | 4 | 2414 | 2654 | 2894 | 3134 | 6290 | 7290 | 8290 | T212C565K075(2)S |
| 5.6 | C | 20 | T110C565M075AS | 3.0 | 4 | | | | | | | | |
| 6.8 | C | 5 | T110C685J075AS | 5.0 | 4 | 5117 | 5317 | 5517 | 5717 | 6291 | 7291 | 8291 | T212C685J075(2)S |
| 6.8 | C | 10 | T110C685K075AS | 5.0 | 4 | 2415 | 2655 | 2895 | 3135 | 6292 | 7292 | 8292 | T212C685K075(2)S |
| 6.8 | C | 20 | T110C685M075AS | 5.0 | 4 | 2416 | 2656 | 2896 | 3136 | 6293 | 7293 | 8293 | T212C685M075(2)S |
| 8.2 | C | 5 | T110C825J075AS | 5.0 | 4 | 5118 | 5318 | 5518 | 5718 | 6294 | 7294 | 8294 | T212C825J075(2)S |
| 8.2 | C | 10 | T110C825K075AS | 5.0 | 4 | 2417 | 2657 | 2897 | 3137 | 6295 | 7295 | 8295 | T212C825K075(2)S |
| 8.2 | C | 20 | T110C825M075AS | 5.0 | 4 | | | | | | | | |
| 10.0 | C | 5 | T110C106J075AS | 5.0 | 4 | 5119 | 5319 | 5519 | 5719 | 6296 | 7296 | 8296 | T212C106J075(2)S |
| 10.0 | C | 10 | T110C106K075AS | 5.0 | 4 | 2418 | 2658 | 2898 | 3138 | 6297 | 7297 | 8297 | T212C106K075(2)S |
| 10.0 | C | 20 | T110C106M075AS | 5.0 | 4 | 2419 | 2659 | 2899 | 3139 | 6298 | 7298 | 8298 | T212C106M075(2)S |
| 12.0 | D | 5 | T110D126J075AS | 5.0 | 4 | 5120 | 5320 | 5520 | 5720 | 6299 | 7299 | 8299 | T212D126J075(2)S |
| 12.0 | D | 10 | T110D126K075AS | 5.0 | 4 | 2420 | 2660 | 2900 | 3140 | 6300 | 7300 | 8300 | T212D126K075(2)S |
| 12.0 | D | 20 | T110D126M075AS | 5.0 | 4 | | | | | | | | |
| 15.0 | D | 5 | T110D156J075AS | 7.0 | 4 | 5121 | 5321 | 5521 | 5721 | 6301 | 7301 | 8301 | T212D156J075(2)S |
| 15.0 | D | 10 | T110D156K075AS | 7.0 | 4 | 2421 | 2661 | 2901 | 3141 | 6302 | 7302 | 8302 | T212D156K075(2)S |
| 15.0 | D | 20 | T110D156M075AS | 7.0 | 4 | 2422 | 2662 | 2902 | 3142 | 6303 | 7303 | 8303 | T212D156M075(2)S |
| **100 VOLT RATING AT 85°C — 67 VOLT RATING AT 125°** | | | | | | | | | | | | | |
| 0.0047 | A | 5 | T110A472J100AS | 0.3 | 2 | 5122 | 5322 | 5522 | 5722 | 6304 | 7304 | * | T212A472J100(2)S |
| 0.0047 | A | 10 | T110A472K100AS | 0.3 | 2 | 2423 | 2663 | 2903 | 3143 | 6305 | 7305 | * | T212A472K100(2)S |
| 0.0047 | A | 20 | T110A472M100AS | 0.3 | 2 | 2424 | 2664 | 2904 | 3144 | 6306 | 7306 | * | T212A472M100(2)S |
| 0.0056 | A | 5 | T110A562J100AS | 0.3 | 2 | 5123 | 5323 | 5523 | 5723 | 6307 | 7307 | * | T212A562J100(2)S |
| 0.0056 | A | 10 | T110A562K100AS | 0.3 | 2 | 2425 | 2665 | 2905 | 3145 | 6308 | 7308 | * | T212A562K100(2)S |
| 0.0056 | A | 20 | T110A562M100AS | 0.3 | 2 | | | | | | | | |
| 0.0068 | A | 5 | T110A682J100AS | 0.3 | 2 | 5124 | 5324 | 5524 | 5724 | 6309 | 7309 | * | T212A682J100(2)S |
| 0.0068 | A | 10 | T110A682K100AS | 0.3 | 2 | 2426 | 2666 | 2906 | 3146 | 6310 | 7310 | * | T212A682K100(2)S |
| 0.0068 | A | 20 | T110A682M100AS | 0.3 | 2 | 2427 | 2667 | 2907 | 3147 | 6311 | 7311 | * | T212A682M100(2)S |
| 0.0082 | A | 5 | T110A822J100AS | 0.3 | 2 | 5125 | 5325 | 5525 | 5725 | 6312 | 7312 | * | T212A822J100(2)S |
| 0.0082 | A | 10 | T110A822K100AS | 0.3 | 2 | 2428 | 2668 | 2908 | 3148 | 6313 | 7313 | * | T212A822K100(2)S |
| 0.0082 | A | 20 | T110A822M100AS | 0.3 | 2 | | | | | | | | |
| 0.01 | A | 5 | T110A103J100AS | 0.3 | 2 | 5126 | 5326 | 5526 | 5726 | 6314 | 7314 | * | T212A103J100(2)S |
| 0.01 | A | 10 | T110A103K100AS | 0.3 | 2 | 2429 | 2669 | 2909 | 3149 | 6315 | 7315 | * | T212A103K100(2)S |
| 0.01 | A | 20 | T110A103M100AS | 0.3 | 2 | 2430 | 2670 | 2910 | 3150 | 6316 | 7316 | * | T212A103M100(2)S |
| 0.012 | A | 5 | T110A123J100AS | 0.3 | 2 | 5127 | 5327 | 5527 | 5727 | 6317 | 7317 | * | T212A123J100(2)S |
| 0.012 | A | 10 | T110A123K100AS | 0.3 | 2 | 2431 | 2671 | 2911 | 3151 | 6318 | 7318 | * | T212A123K100(2)S |
| 0.012 | A | 20 | T110A123M100AS | 0.3 | 2 | | | | | | | | |
| 0.015 | A | 5 | T110A153J100AS | 0.3 | 2 | 5128 | 5328 | 5528 | 5728 | 6319 | 7319 | * | T212A153J100(2)S |
| 0.015 | A | 10 | T110A153K100AS | 0.3 | 2 | 2432 | 2672 | 2912 | 3152 | 6320 | 7320 | * | T212A153K100(2)S |
| 0.015 | A | 20 | T110A153M100AS | 0.3 | 2 | 2433 | 2673 | 2913 | 3153 | 6321 | 7321 | * | T212A153M100(2)S |
| 0.018 | A | 5 | T110A183J100AS | 0.3 | 2 | 5129 | 5329 | 5529 | 5729 | 6322 | 7322 | * | T212A183J100(2)S |
| 0.018 | A | 10 | T110A183K100AS | 0.3 | 2 | 2434 | 2674 | 2914 | 3154 | 6323 | 7323 | * | T212A183K100(2)S |
| 0.018 | A | 20 | T110A183M100AS | 0.3 | 2 | | | | | | | | |
| 0.022 | A | 5 | T110A223J100AS | 0.3 | 2 | 5130 | 5330 | 5530 | 5730 | 6324 | 7324 | * | T212A223J100(2)S |
| 0.022 | A | 10 | T110A223K100AS | 0.3 | 2 | 2435 | 2675 | 2915 | 3155 | 6325 | 7325 | * | T212A223K100(2)S |

(1) To complete T110 Series part number, insert Capacitance Tolerance Symbol in the 9th Character as shown on Page 6.
(2) To complete the T212 Series Part Number, insert Failure Rate Symbol in the 13th Character.
**Bold Face** lines indicate popular part types and values.
*Note: D Failure Rate — Not QPL for -8304 thru -8401.

## RATINGS & PART NUMBER REFERENCE

| CAPACITANCE µF | CASE SIZE | CAPACITANCE TOLERANCE ±% | KEMET T110 KEMET PART NUMBER | D.C. LEAKAGE µA@25°C MAX. | MAX. DISSIPATION FACTOR %@25°C, 120Hz | MIL-PRF-39003 (CSR13) CAPACITORS — DASH NUMBER REFERENCE FAILURE RATE LEVEL (%/1000 HRS.) — MIL-PRF-39003/1H EXPONENTIAL M (1.0) | P (0.1) | R (0.01) | S (0.001) | MIL-PRF-39003/1H GRADED B (0.1) | C (0.01) | D (0.001) | KEMET EQUIVALENT MILITARY PART NUMBER |
|---|---|---|---|---|---|---|---|---|---|---|---|---|---|
| **100 VOLT RATING AT 85°C — 67 VOLT RATING AT 125°C (Cont'd)** | | | | | | | | | | | | | |
| 0.022 | A | 20 | T110A223M100AS | 0.3 | 2 | 2436 | 2676 | 2916 | 3156 | 6326 | 7326 | * | T212A223M100(2)S |
| 0.027 | A | 5 | T110A273J100AS | 0.3 | 2 | 5131 | 5331 | 5531 | 5731 | 6327 | 7327 | * | T212A273J100(2)S |
| 0.027 | A | 10 | T110A273K100AS | 0.3 | 2 | 2437 | 2677 | 2917 | 3157 | 6328 | 7328 | * | T212A273K100(2)S |
| 0.027 | A | 20 | T110A273M100AS | 0.3 | 2 | | | | | | | | |
| 0.033 | A | 5 | T110A333J100AS | 0.3 | 2 | 5132 | 5332 | 5532 | 5732 | 6329 | 7329 | * | T212A333J100(2)S |
| 0.033 | A | 10 | T110A333K100AS | 0.3 | 2 | 2438 | 2678 | 2918 | 3158 | 6330 | 7330 | * | T212A333K100(2)S |
| 0.033 | A | 20 | T110A333M100AS | 0.3 | 2 | 2439 | 2679 | 2919 | 3159 | 6331 | 7331 | * | T212A333M100(2)S |
| 0.039 | A | 5 | T110A393J100AS | 0.3 | 2 | 5133 | 5333 | 5533 | 5733 | 6332 | 7332 | * | T212A393J100(2)S |
| 0.039 | A | 10 | T110A393K100AS | 0.3 | 2 | 2440 | 2680 | 2920 | 3160 | 6333 | 7333 | * | T212A393K100(2)S |
| 0.039 | A | 20 | T110A393M100AS | 0.3 | 2 | | | | | | | | |
| 0.047 | A | 5 | T110A473J100AS | 0.3 | 2 | 5134 | 5334 | 5534 | 5734 | 6334 | 7334 | * | T212A473J100(2)S |
| 0.047 | A | 10 | T110A473K100AS | 0.3 | 2 | 2441 | 2681 | 2921 | 3161 | 6335 | 7335 | * | T212A473K100(2)S |
| 0.047 | A | 20 | T110A473M100AS | 0.3 | 2 | 2442 | 2682 | 2922 | 3162 | 6336 | 7336 | * | T212A473M100(2)S |
| 0.056 | A | 5 | T110A563J100AS | 0.3 | 2 | 5135 | 5335 | 5535 | 5735 | 6337 | 7337 | * | T212A563J100(2)S |
| 0.056 | A | 10 | T110A563K100AS | 0.3 | 2 | 2443 | 2683 | 2923 | 3163 | 6338 | 7338 | * | T212A563K100(2)S |
| 0.056 | A | 20 | T110A563M100AS | 0.3 | 2 | | | | | | | | |
| 0.068 | A | 5 | T110A683J100AS | 0.3 | 2 | 5136 | 5336 | 5536 | 5736 | 6339 | 7339 | * | T212A683J100(2)S |
| 0.068 | A | 10 | T110A683K100AS | 0.3 | 2 | 2444 | 2684 | 2924 | 3164 | 6340 | 7340 | * | T212A683K100(2)S |
| 0.068 | A | 20 | T110A683M100AS | 0.3 | 2 | 2445 | 2685 | 2925 | 3165 | 6341 | 7341 | * | T212A683M100(2)S |
| 0.082 | A | 5 | T110A823J100AS | 0.3 | 2 | 5137 | 5337 | 5537 | 5737 | 6342 | 7342 | * | T212A823J100(2)S |
| 0.082 | A | 10 | T110A823K100AS | 0.3 | 2 | 2446 | 2686 | 2926 | 3166 | 6343 | 7343 | * | T212A823K100(2)S |
| 0.082 | A | 20 | T110A823M100AS | 0.3 | 2 | | | | | | | | |
| 0.1 | A | 5 | T110A104J100AS | 0.3 | 2 | 5138 | 5338 | 5538 | 5738 | 6344 | 7344 | * | T212A104J100(2)S |
| 0.1 | A | 10 | T110A104K100AS | 0.3 | 2 | 2447 | 2687 | 2927 | 3167 | 6345 | 7345 | * | T212A104K100(2)S |
| 0.1 | A | 20 | T110A104M100AS | 0.3 | 2 | 2448 | 2688 | 2928 | 3168 | 6346 | 7346 | * | T212A104M100(2)S |
| 0.12 | A | 5 | T110A124J100AS | 0.3 | 2 | 5139 | 5339 | 5539 | 5739 | 6347 | 7347 | * | T212A124J100(2)S |
| 0.12 | A | 10 | T110A124K100AS | 0.3 | 2 | 2449 | 2689 | 2929 | 3169 | 6348 | 7348 | * | T212A124K100(2)S |
| 0.12 | A | 20 | T110A124M100AS | 0.3 | 2 | | | | | | | | |
| 0.15 | A | 5 | T110A154J100AS | 0.3 | 2 | 5140 | 5340 | 5540 | 5740 | 6349 | 7349 | * | T212A154J100(2)S |
| 0.15 | A | 10 | T110A154K100AS | 0.3 | 2 | 2450 | 2690 | 2930 | 3170 | 6350 | 7350 | * | T212A154K100(2)S |
| 0.15 | A | 20 | T110A154M100AS | 0.3 | 2 | 2451 | 2691 | 2931 | 3171 | 6351 | 7351 | * | T212A154M100(2)S |
| 0.18 | A | 5 | T110A184J100AS | 0.3 | 2 | 5141 | 5341 | 5541 | 5741 | 6352 | 7352 | * | T212A184J100(2)S |
| 0.18 | A | 10 | T110A184K100AS | 0.3 | 2 | 2452 | 2692 | 2932 | 3172 | 6353 | 7353 | * | T212A184K100(2)S |
| 0.18 | A | 20 | T110A184M100AS | 0.3 | 2 | | | | | | | | |
| 0.22 | A | 5 | T110A224J100AS | 0.3 | 2 | 5142 | 5342 | 5542 | 5742 | 6354 | 7354 | * | T212A224J100(2)S |
| 0.22 | A | 10 | T110A224K100AS | 0.3 | 2 | 2453 | 2693 | 2933 | 3173 | 6355 | 7355 | * | T212A224K100(2)S |
| 0.22 | A | 20 | T110A224M100AS | 0.3 | 2 | 2454 | 2694 | 2934 | 3174 | 6356 | 7356 | * | T212A224M100(2)S |
| 0.27 | A | 5 | T110A274J100AS | 0.3 | 2 | 5143 | 5343 | 5543 | 5743 | 6357 | 7357 | * | T212A274J100(2)S |
| 0.27 | A | 10 | T110A274K100AS | 0.3 | 2 | 2455 | 2695 | 2935 | 3175 | 6358 | 7358 | * | T212A274K100(2)S |
| 0.27 | A | 20 | T110A274M100AS | 0.3 | 2 | | | | | | | | |
| 0.33 | A | 5 | T110A334J100AS | 0.3 | 2 | 5144 | 5344 | 5544 | 5744 | 6359 | 7359 | * | T212A334J100(2)S |
| 0.33 | A | 10 | T110A334K100AS | 0.3 | 2 | 2456 | 2696 | 2936 | 3176 | 6360 | 7360 | * | T212A334K100(2)S |
| 0.33 | A | 20 | T110A334M100AS | 0.3 | 2 | 2457 | 2697 | 2937 | 3177 | 6361 | 7361 | * | T212A334M100(2)S |
| 0.39 | A | 5 | T110A394J100AS | 0.3 | 2 | 5145 | 5345 | 5545 | 5745 | 6362 | 7362 | * | T212A394J100(2)S |
| 0.39 | A | 10 | T110A394K100AS | 0.3 | 2 | 2458 | 2698 | 2938 | 3178 | 6363 | 7363 | * | T212A394K100(2)S |
| 0.39 | A | 20 | T110A394M100AS | 0.3 | 2 | | | | | | | | |
| 0.47 | A | 5 | T110A474J100AS | 0.3 | 2 | 5146 | 5346 | 5546 | 5746 | 6364 | 7364 | * | T212A474J100(2)S |
| 0.47 | A | 10 | T110A474K100AS | 0.3 | 2 | 2459 | 2699 | 2939 | 3179 | 6365 | 7365 | * | T212A474K100(2)S |
| 0.47 | A | 20 | T110A474M100AS | 0.3 | 2 | 2460 | 2700 | 2940 | 3180 | 6366 | 7366 | * | T212A474M100(2)S |
| 0.56 | A | 5 | T110A564J100AS | 0.3 | 2 | 5147 | 5347 | 5547 | 5747 | 6367 | 7367 | * | T212A564J100(2)S |
| 0.56 | A | 10 | T110A564K100AS | 0.3 | 2 | 2461 | 2701 | 2941 | 3181 | 6368 | 7368 | * | T212A564K100(2)S |
| 0.56 | A | 20 | T110A564M100AS | 0.3 | 2 | | | | | | | | |
| 0.68 | B | 5 | T110B684J100AS | 0.3 | 2 | 5148 | 5348 | 5548 | 5748 | 6369 | 7369 | * | T212B684J100(2)S |
| 0.68 | B | 10 | T110B684K100AS | 0.3 | 2 | 2462 | 2702 | 2942 | 3182 | 6370 | 7370 | * | T212B684K100(2)S |
| 0.68 | B | 20 | T110B684M100AS | 0.3 | 2 | 2463 | 2703 | 2943 | 3183 | 6371 | 7371 | * | T212B684M100(2)S |
| 0.82 | B | 5 | T110B824J100AS | 0.4 | 2 | 5149 | 5349 | 5549 | 5749 | 6372 | 7372 | * | T212B824J100(2)S |
| 0.82 | B | 10 | T110B824K100AS | 0.4 | 2 | 2464 | 2704 | 2944 | 3184 | 6373 | 7373 | * | T212B824K100(2)S |
| 0.82 | B | 20 | T110B824M100AS | 0.4 | 2 | | | | | | | | |
| 1.0 | B | 5 | T110B105J100AS | 0.5 | 2 | 5150 | 5350 | 5550 | 5750 | 6374 | 7374 | * | T212B105J100(2)S |
| 1.0 | B | 10 | T110B105K100AS | 0.5 | 2 | 2465 | 2705 | 2945 | 3185 | 6375 | 7375 | * | T212B105K100(2)S |
| 1.0 | B | 20 | T110B105M100AS | 0.5 | 2 | 2466 | 2706 | 2946 | 3186 | 6376 | 7376 | * | T212B105M100(2)S |

(1) To complete T110 Series Part Number, insert Capacitance Tolerance Symbol in the 9th Character as shown on Page 6.
(2) To complete the T212 Series Part Number, insert Failure Rate Symbol in the 13th Character.
**Bold Face** lines indicate popular part types and values.
*Note: D Failure Rate — Not QPL for -8304 thru -8401.

## RATINGS & PART NUMBER REFERENCE

| CAPACITANCE µF | CASE SIZE | CAPACITANCE TOLERANCE ±% | KEMET T110 PART NUMBER | D.C. LEAKAGE µA@25°C MAX. | MAX. DISSIPATION FACTOR %@25°C, 120Hz | MIL-PRF-39003 (CSR13) CAPACITORS — DASH NUMBER REFERENCE FAILURE RATE LEVEL (%/1000 HRS.) — MIL-PRF-39003/1H EXPONENTIAL: M (1.0) | P (0.1) | R (0.01) | S (0.001) | MIL-PRF-39003/1H GRADED: B (0.1) | C (0.01) | D (0.001) | KEMET EQUIVALENT MILITARY PART NUMBER |
|---|---|---|---|---|---|---|---|---|---|---|---|---|---|
| **100 VOLT RATING AT 85°C — 67 VOLT RATING AT 125°C (Cont'd)** | | | | | | | | | | | | | |
| 1.2 | B | 5 | T110B125J100AS | 0.5 | 3 | 5151 | 5351 | 5551 | 5751 | 6377 | 7377 | * | T212B125J100(2)S |
| 1.2 | B | 10 | T110B125K100AS | 0.5 | 3 | 2467 | 2707 | 2947 | 3187 | 6378 | 7378 | * | T212B125K100(2)S |
| 1.2 | B | 20 | T110B125M100AS | 0.5 | 3 | | | | | | | | |
| 1.5 | B | 5 | T110B155J100AS | 0.7 | 3 | 5152 | 5352 | 5552 | 5752 | 6379 | 7379 | * | T212B155J100(2)S |
| 1.5 | B | 10 | T110B155K100AS | 0.7 | 3 | 2468 | 2708 | 2948 | 3188 | 6380 | 7380 | * | T212B155K100(2)S |
| 1.5 | B | 20 | T110B155M100AS | 0.7 | 3 | 2469 | 2709 | 2949 | 3189 | 6381 | 7381 | * | T212B155M100(2)S |
| 1.8 | B | 5 | T110B185J100AS | 0.7 | 3 | 5153 | 5353 | 5553 | 5753 | 6382 | 7382 | * | T212B185J100(2)S |
| 1.8 | B | 10 | T110B185K100AS | 0.7 | 3 | 2470 | 2710 | 2950 | 3190 | 6383 | 7383 | * | T212B185K100(2)S |
| 1.8 | B | 20 | T110B185M100AS | 0.7 | 3 | | | | | | | | |
| 2.2 | B | 5 | T110B225J100AS | 0.9 | 3 | 5154 | 5354 | 5554 | 5754 | 6384 | 7384 | * | T212B225J100(2)S |
| 2.2 | B | 10 | T110B225K100AS | 0.9 | 3 | 2471 | 2711 | 2951 | 3191 | 6385 | 7385 | * | T212B225K100(2)S |
| 2.2 | B | 20 | T110B225M100AS | 0.9 | 3 | 2472 | 2712 | 2952 | 3192 | 6386 | 7386 | * | T212B225M100(2)S |
| 2.7 | B | 5 | T110B275J100AS | 1.1 | 3 | 5155 | 5355 | 5555 | 5755 | 6387 | 7387 | * | T212B275J100(2)S |
| 2.7 | B | 10 | T110B275K100AS | 1.1 | 3 | 2473 | 2713 | 2953 | 3193 | 6388 | 7388 | * | T212B275K100(2)S |
| 2.7 | B | 20 | T110B275M100AS | 1.1 | 3 | | | | | | | | |
| 3.3 | C | 5 | T110C335J100AS | 1.5 | 3 | 5156 | 5356 | 5556 | 5756 | 6389 | * | * | T212C335J100(2)S |
| 3.3 | C | 10 | T110C335K100AS | 1.5 | 3 | 5157 | 5357 | 5557 | 5757 | 6390 | * | * | T212C335K100(2)S |
| 3.3 | C | 20 | T110C335M100AS | 1.5 | 3 | 5158 | 5358 | 5558 | 5758 | 6391 | * | * | T212C335M100(2)S |
| 3.9 | C | 5 | T110C395J100AS | 1.5 | 3 | 5159 | 5359 | 5559 | 5759 | 6392 | * | * | T212C395J100(2)S |
| 3.9 | C | 10 | T110C395K100AS | 1.5 | 3 | 5160 | 5360 | 5560 | 5760 | 6393 | * | * | T212C395K100(2)S |
| 4.7 | C | 5 | T110C475J100AS | 2.5 | 3 | 5161 | 5361 | 5561 | 5761 | 6394 | * | * | T212C475J100(2)S |
| 4.7 | C | 10 | T110C475K100AS | 2.5 | 3 | 5162 | 5362 | 5562 | 5762 | 6395 | * | * | T212C475K100(2)S |
| 4.7 | C | 20 | T110C475M100AS | 2.5 | 3 | 5163 | 5363 | 5563 | 5763 | 6396 | * | * | T212C475M100(2)S |
| 5.6 | C | 5 | T110C565J100AS | 2.5 | 3 | 5164 | 5364 | 5564 | 5764 | 6397 | * | * | T212C565J100(2)S |
| 5.6 | C | 10 | T110C565K100AS | 2.5 | 3 | 5165 | 5365 | 5565 | 5765 | 6398 | * | * | T212C565K100(2)S |
| 6.8 | C | 5 | T110C685J100AS | 2.5 | 3 | 5166 | 5366 | 5566 | 5766 | 6399 | * | * | T212C685J100(2)S |
| 6.8 | C | 10 | T110C685K100AS | 2.5 | 3 | 5167 | 5367 | 5567 | 5767 | 6400 | * | * | T212C685K100(2)S |
| 6.8 | C | 20 | T110C685M100AS | 2.5 | 3 | 5168 | 5368 | 5568 | 5768 | 6401 | * | * | T212C685M100(2)S |
| 8.2 | D | 5,10,20 | T110D825(1)100AS | 5.0 | 3 | | | | | | | | |
| 10.0 | D | 5,10,20 | T110D106(1)100AS | 5.0 | 3 | | | | | | | | |
| **125 VOLT RATING AT 85°C — 82 VOLT RATING AT 125°** | | | | | | | | | | | | | |
| 0.0047 | A | 5,10,20 | T110A472(1)125AS | 0.5 | 3 | | | | | | | | |
| 0.0056 | A | 5,10,20 | T110A562(1)125AS | 0.5 | 3 | | | | | | | | |
| 0.0068 | A | 5,10,20 | T110A682(1)125AS | 0.5 | 3 | | | | | | | | |
| 0.0082 | A | 5,10,20 | T110A822(1)125AS | 0.5 | 3 | | | | | | | | |
| 0.01 | A | 5,10,20 | T110A103(1)125AS | 0.5 | 3 | | | | | | | | |
| 0.012 | A | 5,10,20 | T110A123(1)125AS | 0.5 | 3 | | | | | | | | |
| 0.015 | A | 5,10,20 | T110A153(1)125AS | 0.5 | 3 | | | | | | | | |
| 0.018 | A | 5,10,20 | T110A183(1)125AS | 0.5 | 3 | | | | | | | | |
| 0.022 | A | 5,10,20 | T110A223(1)125AS | 0.5 | 3 | | | | | | | | |
| 0.027 | A | 5,10,20 | T110A273(1)125AS | 0.5 | 3 | | | | | | | | |
| 0.033 | A | 5,10,20 | T110A333(1)125AS | 0.5 | 3 | | | | | | | | |
| 0.039 | A | 5,10,20 | T110A393(1)125AS | 1.5 | 3 | | | | | | | | |
| 0.047 | A | 5,10,20 | T110A473(1)125AS | 1.5 | 3 | | | | | | | | |
| 0.056 | A | 5,10,20 | T110A563(1)125AS | 1.5 | 3 | | | | | | | | |
| 0.068 | A | 5,10,20 | T110A683(1)125AS | 1.5 | 3 | | | | | | | | |
| 0.082 | A | 5,10,20 | T110A823(1)125AS | 1.5 | 3 | | | | | | | | |
| 0.1 | A | 5,10,20 | T110A104(1)125AS | 1.5 | 3 | | | | | | | | |
| 0.12 | A | 5,10,20 | T110A124(1)125AS | 1.5 | 3 | | | | | | | | |
| 0.15 | A | 5,10,20 | T110A154(1)125AS | 1.5 | 3 | | | | | | | | |
| 0.18 | A | 5,10,20 | T110A184(1)125AS | 1.5 | 3 | | | | | | | | |
| 0.22 | A | 5,10,20 | T110A224(1)125AS | 1.5 | 3 | | | | | | | | |
| 0.27 | A | 5,10,20 | T110A274(1)125AS | 1.5 | 3 | | | | | | | | |
| 0.33 | A | 5,10,20 | T110A334(1)125AS | 1.5 | 3 | | | | | | | | |
| 0.39 | B | 5,10,20 | T110B394(1)125AS | 1.5 | 3 | | | | | | | | |
| 0.47 | B | 5,10,20 | T110B474(1)125AS | 1.5 | 3 | | | | | | | | |
| 0.56 | B | 5,10,20 | T110B564(1)125AS | 1.5 | 3 | | | | | | | | |
| 0.68 | B | 5,10,20 | T110B684(1)125AS | 1.5 | 3 | | | | | | | | |
| 0.82 | B | 5,10,20 | T110B824(1)125AS | 1.5 | 3 | | | | | | | | |

(1) To complete T110 Series Part Number, insert Capacitance Tolerance Symbol in the 9th Character as shown on Page 6.
(2) To complete the T212 Series Part Number, insert Failure Rate Symbol in the 13th Character.
**Bold Face** lines indicate popular part types and values.
*Note: C failure rate — Not QPL for 7389 thru 7401.
D failure rate — Not QPL for -8304 thru -8401.

## RATINGS & PART NUMBER REFERENCE

| CAPACITANCE µF | CASE SIZE | CAPACITANCE TOLERANCE ±% | KEMET T110 KEMET PART NUMBER | D.C. LEAKAGE µA@25°C MAX. | MAX. DISSIPATION FACTOR %@25°C, 120Hz | MIL-PRF-39003 (CSR13) CAPACITORS — DASH NUMBER REFERENCE FAILURE RATE LEVEL (%/1000 HRS.) — MIL-PRF-39003/1H EXPONENTIAL: M (1.0) | P (0.1) | R (0.01) | S (0.001) | MIL-PRF-39003/1H GRADED: B (0.1) | C (0.01) | D (0.001) | KEMET EQUIVALENT MILITARY PART NUMBER |
|---|---|---|---|---|---|---|---|---|---|---|---|---|---|
| **125 VOLT RATING AT 85°C — 82 VOLT RATING AT 125°C** | | | | | | | | | | | | | |
| 1.0 | B | 5,10,20 | T110B105(1)125AS | 1.5 | 3 | | | | | | | | |
| 1.2 | B | 5,10,20 | T110B125(1)125AS | 1.5 | 3 | | | | | | | | |
| 1.5 | B | 5,10,20 | T110B155(1)125AS | 1.5 | 3 | | | | | | | | |
| 1.8 | B | 5,10,20 | T110B185(1)125AS | 1.5 | 3 | | | | | | | | |
| 2.2 | B | 5,10,20 | T110B225(1)125AS | 1.5 | 3 | | | | | | | | |
| 2.7 | C | 5,10,20 | T110C275(1)125AS | 2.0 | 3 | | | | | | | | |
| 3.3 | C | 5,10,20 | T110C335(1)125AS | 2.0 | 3 | | | | | | | | |
| 3.9 | C | 5,10,20 | T110C395(1)125AS | 2.0 | 3 | | | | | | | | |
| 4.7 | C | 5,10,20 | T110C475(1)125AS | 3.0 | 3 | | | | | | | | |
| 5.6 | C | 5,10,20 | T110C565(1)125AS | 3.0 | 3 | | | | | | | | |
| 6.8 | C | 5,10,20 | T110C685(1)125AS | 3.0 | 3 | | | | | | | | |
| 8.2 | D | 5,10,20 | T110D825(1)125AS | 6.0 | 3 | | | | | | | | |
| 10.0 | D | 5,10,20 | T110D106(1)125AS | 6.0 | 3 | | | | | | | | |

(1) To complete T110 Series Part Number, insert Capacitance Tolerance Symbol in the 9th Character as shown on Page 6.
(2) To complete the T212 Series Part Number, insert Failure Rate Symbol in the 13th Character.
**Bold Face** lines indicate popular part types and values.

### T110/T140 Herm Seal ESR (OHMS) at 100 kHz @ +25°C

(The ESR values provided below are for reference only. No warranty, as stated on page 3 and reincorporated here, is made as to the accuracy of these values for any particular T110/T140 Series product.)

| Cap µF | 6 Volt | 10 Volt | 15 Volt | 20 Volt | 30 Volt | 35 Volt | 50 Volt | 60 Volt | 75 Volt | 100 Volt | 125 Volt |
|---|---|---|---|---|---|---|---|---|---|---|---|
| 0.10 | | | | 37.0 | | 26.0 | 26.0 | 26.0 | 26.0 | 25.0 | 25.0 |
| 0.12 | | | | 37.0 | | 26.0 | 26.0 | 26.0 | 26.0 | 25.0 | 25.0 |
| 0.15 | | | | 32.0 | | 21.0 | 21.0 | 21.0 | 21.0 | 20.0 | 20.0 |
| 0.18 | | | | 32.0 | | 21.0 | 21.0 | 21.0 | 21.0 | 20.0 | 20.0 |
| 0.22 | | | | 27.0 | | 17.0 | 17.0 | 17.0 | 17.0 | 16.0 | 16.0 |
| 0.27 | | | | 25.0 | | 17.0 | 17.0 | 17.0 | 17.0 | 16.0 | 16.0 |
| 0.33 | | | 28.0 | 22.0 | | 15.0 | 15.0 | 15.0 | 15.0 | 14.0 | 14.0 |
| 0.39 | | | 28.0 | 22.0 | | 15.0 | 15.0 | 15.0 | 15.0 | 14.0 | 14.0 |
| 0.47 | | | 26.0 | 20.0 | | 13.0 | 13.0 | 13.0 | 13.0 | 12.0 | 12.0 |
| 0.56 | | | 26.0 | 18.0 | | 13.0 | 13.0 | 13.0 | 13.0 | 12.0 | 12.0 |
| 0.68 | | | 24.0 | 16.0 | | 10.0 | 10.0 | 10.0 | 10.0 | 9.0 | 9.0 |
| 0.82 | | | 24.0 | 16.0 | | 10.0 | 10.0 | 10.0 | 10.0 | 9.0 | 9.0 |
| 1.0 | | 20.0 | 17.0 | 10.0 | | 8.0 | 8.0 | 8.0 | 8.0 | 7.0 | 7.0 |
| 1.2 | | 20.0 | 17.0 | 10.0 | 9.0 | 8.0 | 8.0 | 8.0 | 8.0 | 7.0 | 7.0 |
| 1.5 | | 14.0 | 10.0 | 9.0 | 8.0 | 6.0 | 5.0 | 5.0 | 5.0 | 4.0 | 4.0 |
| 1.8 | | 14.0 | 10.0 | 9.0 | 8.0 | 6.0 | 5.0 | 5.0 | 5.0 | 4.0 | 4.0 |
| 2.2 | 14.0 | 13.0 | 8.0 | 7.0 | 6.0 | 5.0 | 3.5 | 3.5 | 3.5 | 3.0 | 3.0 |
| 2.7 | 14.0 | 13.0 | 8.0 | 7.0 | 6.0 | 5.0 | 3.5 | 3.5 | 3.5 | 3.0 | 3.0 |
| 3.3 | 13.0 | 10.0 | 6.0 | 5.5 | | 4.0 | 3.0 | 3.0 | 3.0 | 2.5 | 2.5 |
| 3.9 | 13.0 | 10.0 | 6.0 | 5.5 | | 4.0 | 3.0 | 3.0 | 3.0 | 2.5 | 2.5 |
| 4.7 | 10.0 | 8.0 | 5.0 | 4.5 | | 3.0 | 2.5 | 2.5 | 2.5 | 2.0 | 2.0 |
| 5.6 | 10.0 | 8.0 | 5.0 | 4.5 | | 3.0 | 2.5 | 2.5 | 2.5 | 2.0 | 2.0 |
| 6.8 | 8.0 | 6.0 | 4.0 | 3.6 | | 2.5 | 2.0 | 2.0 | 2.0 | 1.5 | 1.5 |
| 8.2 | 8.0 | 6.0 | 4.0 | 3.6 | | 2.5 | 2.0 | 2.0 | 2.0 | 1.5 | 1.5 |
| 10.0 | 6.0 | 5.0 | 3.2 | 2.9 | | 2.0 | 1.6 | 1.6 | 1.6 | 1.0 | 1.0 |
| 12.0 | 6.0 | 5.0 | 3.2 | 2.9 | 2.5 | 2.0 | 1.6 | 1.6 | 1.6 | | |
| 15.0 | 5.0 | 3.7 | 2.5 | 2.3 | 2.0 | 1.6 | 1.2 | 1.2 | 1.2 | | |
| 18.0 | 5.0 | 3.7 | 2.5 | 2.3 | 2.0 | 1.6 | 1.2 | 1.2 | | | |
| 22.0 | 3.7 | 2.7 | 2.0 | 1.8 | | 1.3 | 1.0 | 1.0 | | | |
| 27.0 | 3.7 | 2.7 | 2.0 | 1.8 | | 1.3 | 1.0 | 1.0 | | | |
| 33.0 | 3.0 | 2.1 | 1.6 | 1.4 | 1.2 | 1.0 | 0.8 | 0.8 | | | |
| 39.0 | 3.0 | 2.1 | 1.6 | 1.4 | 1.2 | 1.0 | 0.8 | | | | |
| 47.0 | 2.0 | 1.7 | 1.3 | 1.2 | 1.0 | 0.8 | 0.6 | | | | |
| 56.0 | 2.0 | 1.7 | 1.3 | 1.2 | 1.0 | 0.8 | | | | | |
| 68.0 | 1.8 | 1.3 | 1.0 | 0.9 | 0.8 | 0.6 | | | | | |
| 82.0 | 1.8 | 1.3 | 1.0 | 0.9 | 0.8 | 0.6 | | | | | |
| 100.0 | 1.6 | 1.0 | 0.8 | 0.6 | 0.5 | 0.5 | | | | | |
| 120.0 | 1.6 | 1.0 | 0.8 | 0.6 | | | | | | | |
| 150.0 | 0.9 | 0.8 | 0.6 | 0.5 | | | | | | | |
| 180.0 | 0.9 | 0.8 | 0.6 | 0.5 | | | | | | | |
| 220.0 | 0.9 | 0.6 | 0.5 | | | | | | | | |
| 270.0 | 0.9 | 0.6 | 0.5 | | | | | | | | |
| 330.0 | 0.7 | 0.5 | 0.4 | | | | | | | | |
| 390.0 | 0.7 | 0.5 | | | | | | | | | |
| 470.0 | 0.5 | 0.5 | | | | | | | | | |
| 560.0 | 0.5 | 0.5 | | | | | | | | | |
| 680.0 | 0.3 | | | | | | | | | | |
| 820.0 | 0.3 | | | | | | | | | | |
| 1000.0 | 0.12 | | | | | | | | | | |
| 1200.0 | 0.12 | | | | | | | | | | |

### T110 Herm Seal LOW ESR (OHMS) at 100 kHz @ +25° C

The ESR values provided below may be ordered using KEMET Customer Specification 2864.

| Cap µF | 6 Volt | 10 Volt | 15 Volt | 20 Volt | 35 Volt | 50 Volt |
|---|---|---|---|---|---|---|
| 5.6 | | | | | | 0.300 |
| 6.8 | | | | | | 0.275 |
| 8.2 | | | | | 0.250 | 0.250 |
| 10.0 | | | | | 0.230 | 0.230 |
| 12.0 | | | | | 0.210 | 0.210 |
| 15.0 | | | | | 0.190 | 0.190 |
| 18.0 | | | | | 0.175 | 0.175 |
| 22.0 | | | | | 0.160 | 0.160 |
| 27.0 | | | | 0.145 | 0.145 | |
| 33.0 | | | | 0.130 | 0.130 | |
| 39.0 | | | | 0.120 | 0.120 | |
| 47.0 | | | | 0.110 | 0.110 | |
| 56.0 | | | 0.100 | 0.100 | | |
| 68.0 | | | 0.095 | 0.095 | | |
| 82.0 | | 0.085 | 0.085 | 0.085 | | |
| 100.0 | | 0.075 | 0.075 | 0.075 | | |
| 120.0 | | 0.070 | 0.070 | | | |
| 150.0 | 0.065 | 0.065 | | | | |
| 180.0 | 0.060 | 0.060 | | | | |
| 220.0 | 0.055 | 0.055 | | | | |
| 270.0 | 0.050 | | | | | |
| 330.0 | 0.045 | | | | | |

# TANTALUM HERMETICALLY SEALED / AXIAL — MIL-PRF-39003

## T111 SERIES — NON-POLAR & T213 (CSR91)

Primarily designed for use in tuned low frequency circuits, phasing low voltage AC motors, servo systems and other applications where reversal of polarity is a primary consideration. The T111 unit consists of two polar T110 Series hermetically sealed tantalum capacitors, electrically and mechanically connected back-to-back and supported by an outer corrosion-resistant metal sleeve. They exhibit comparable electrical and performance characteristics of T110 Series. Available in capacitance values ranging from .0023 to 160 µF in ±20%, ±10%, and ±5% tolerances in working voltages from 6 to 100 VDC at +85°C. Also, the following table includes M39003/4 QPL Product.

## DIMENSIONS — INCHES & (MILLIMETERS)

| CASE SIZE | B ±0.002 (±.05) | UNINSULATED D ±0.010 (±.25) | UNINSULATED L ±0.031 (±.79) | INSULATED D ±0.010 (+.25) -0.015 (-.38) | INSULATED L ±0.031 (±.79) | C MAX. |
|---|---|---|---|---|---|---|
| A | 0.020 (.51) | 0.147 (3.73) | 0.565 (14.35) | 0.161 (4.09) | 0.575 (14.61) | 0.750 (19.05) |
| B | 0.020 (.51) | 0.194 (4.93) | 0.916 (23.27) | 0.207 (5.26) | 0.955 (24.26) | 1.130 (28.70) |
| C | 0.025 (.64) | 0.300 (7.62) | 1.340 (34.04) | 0.314 (7.98) | 1.350 (34.29) | 1.525 (38.74) |
| D | 0.025 (.64) | 0.362 (9.19) | 1.540 (39.12) | 0.376 (9.55) | 1.550 (39.37) | 1.725 (43.82) |

## MARKING INFORMATION*

**A, B, C & D CASES**

| | |
|---|---|
| K 10% | Manufacturer's Classification and Tolerance |
| 6R0 µF | Normal Capacitance — (µF) ("R" indicates decimal) |
| 20V | Voltage |
| 0325AB | Date Code and Batch Code |

## CAPACITOR OUTLINE DRAWINGS

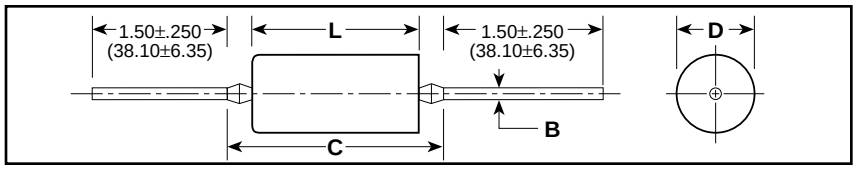


*** For Military Marking, see page 4.**

## RATINGS & PART NUMBER REFERENCE

| CAPACITANCE µF | CASE SIZE | CAPACITANCE TOLERANCE ±% | KEMET T111 SERIES: KEMET PART NUMBER | D.C. LEAKAGE µA@25°C MAX. | MAX. DISSIPATION FACTOR %@25°C, 120Hz | MIL-PRF-39003 (CSR91) CAPACITORS — DASH NUMBER REFERENCE FAILURE RATE LEVEL (%/1000 HRS.) — MIL-PRF-39003/4C EXPONENTIAL: M (1.0) | P (0.1) | R (0.01) | S (0.001) | MIL-PRF-39003/4C GRADED: B (0.1) | C (0.01) | D (0.001) | KEMET EQUIVALENT MILITARY PART NUMBER |
|---|---|---|---|---|---|---|---|---|---|---|---|---|---|
| **6 VOLT RATING AT 85°C — 4 VOLT RATING AT 125°C** | | | | | | | | | | | | | |
| 2.8 | A | 10 | T111A285K006AS | 0.3 | 4 | 0221 | 0441 | 0661 | 0881 | 3001 | 4001 | 5001 | T213A285K006(1)S |
| 3.4 | A | 10 | T111A345K006AS | 0.3 | 6 | 0222 | 0442 | 0662 | 0882 | 3002 | 4002 | 5002 | T213A345K006(1)S |
| 3.4 | A | 20 | T111A345M006AS | 0.3 | 6 | 0223 | 0443 | 0663 | 0883 | 3003 | 4003 | 5003 | T213A345M006(1)S |
| 23.0 | B | 10 | T111B236K006AS | 1.5 | 6 | 0224 | 0444 | 0664 | 0884 | 3004 | 4004 | 5004 | T213B236K006(1)S |
| 23.0 | B | 20 | T111B236M006AS | 1.5 | 6 | 0225 | 0445 | 0665 | 0885 | 3005 | 4005 | 5005 | T213B236M006(1)S |
| 28.0 | B | 10 | T111B286K006AS | 1.5 | 6 | 0226 | 0446 | 0666 | 0886 | 3006 | 4006 | 5006 | T213B286K006(1)S |
| 75.0 | C | 10 | T111C756K006AS | 4.5 | 6 | 0227 | 0447 | 0667 | 0887 | 3007 | 4007 | 5007 | T213C756K006(1)S |
| 75.0 | C | 20 | T111C756M006AS | 4.5 | 6 | 0228 | 0448 | 0668 | 0888 | 3008 | 4008 | 5008 | T213C756M006(1)S |
| 90.0 | C | 10 | T111C906K006AS | 4.5 | 6 | 0229 | 0449 | 0669 | 0889 | 3009 | 4009 | 5009 | T213C906K006(1)S |
| 90.0 | C | 20 | T111C906M006AS | 5.5 | 6 | 0230 | 0450 | 0670 | 0890 | | | | T213C906M006(1)S |
| 130.0 | D | 10 | T111D137K006AS | 6.0 | 8 | 0231 | 0451 | 0671 | 0891 | 3010 | 4010 | 5010 | T213D137K006(1)S |
| 130.0 | D | 20 | T111D137M006AS | 6.0 | 8 | 0232 | 0452 | 0672 | 0892 | | | | T213D137M006(1)S |
| 160.0 | D | 10 | T111D167K006AS | 7.5 | 8 | 0233 | 0453 | 0673 | 0893 | 3011 | 4011 | 5011 | T213D167K006(1)S |
| 160.0 | D | 20 | T111D167M006AS | 7.5 | 8 | 0234 | 0454 | 0674 | 0894 | 3012 | 4012 | 5012 | T213D167M006(1)S |
| **10 VOLT RATING AT 85°C — 7 VOLT RATING AT 125°C** | | | | | | | | | | | | | |
| 1.9 | A | 10 | T111A195K010AS | 0.3 | 4 | 0235 | 0455 | 0675 | 0895 | 3013 | 4013 | 5013 | T213A195K010(1)S |
| 2.3 | A | 10 | T111A235K010AS | 0.4 | 4 | 0236 | 0456 | 0676 | 0896 | 3014 | 4014 | 5014 | T213A235K010(1)S |
| 2.3 | A | 20 | T111A235M010AS | 0.4 | 4 | 0237 | 0457 | 0677 | 0897 | 3015 | 4015 | 5015 | T213A235M010(1)S |
| 13.0 | B | 10 | T111B136K010AS | 2.0 | 6 | 0238 | 0458 | 0678 | 0898 | 3016 | 4016 | 5016 | T213B136K010(1)S |
| 16.0 | B | 10 | T111B166K010AS | 2.0 | 6 | 0239 | 0459 | 0679 | 0899 | 3017 | 4017 | 5017 | T213B166K010(1)S |
| 16.0 | B | 20 | T111B166M010AS | 2.0 | 6 | 0240 | 0460 | 0680 | 0900 | 3018 | 4018 | 5018 | T213B166M010(1)S |
| 19.0 | B | 10 | T111B196K010AS | 2.0 | 6 | 0241 | 0461 | 0681 | 0901 | 3019 | 4019 | 5019 | T213B196K010(1)S |
| 41.0 | C | 10 | T111C416K010AS | 3.0 | 6 | 0242 | 0462 | 0682 | 0902 | 3020 | 4020 | 5020 | T213C416K010(1)S |
| 50.0 | C | 10 | T111C506K010AS | 5.0 | 6 | 0243 | 0463 | 0683 | 0903 | 3021 | 4021 | 5021 | T213C506K010(1)S |
| 50.0 | C | 20 | T111C506M010AS | 5.0 | 6 | 0244 | 0464 | 0684 | 0904 | 3022 | 4022 | 5022 | T213C506M010(1)S |
| 60.0 | C | 10 | T111C606K010AS | 6.0 | 6 | 0245 | 0465 | 0685 | 0905 | 3023 | 4023 | 5023 | T213C606K010(1)S |
| 60.0 | C | 20 | T111C606M010AS | 6.0 | 6 | 0246 | 0466 | 0686 | 0906 | | | | T213C606M010(1)S |
| 90.0 | D | 10 | T111D906K010AS | 9.0 | 6 | 0247 | 0467 | 0687 | 0907 | 3024 | 4024 | 5024 | T213D906K010(1)S |
| 110.0 | D | 10 | T111D117K010AS | 10.0 | 8 | 0248 | 0468 | 0688 | 0908 | 3025 | 4025 | 5025 | T213D117K010(1)S |
| 110.0 | D | 20 | T111D117M010AS | 10.0 | 8 | 0249 | 0469 | 0689 | 0909 | 3026 | 4026 | 5026 | T213D117M010(1)S |

(1) To complete T213 Series Part Number, insert Failure Rate Symbol in the 13th Character as shown on Page 6.
*For ordering information see page 4 (military) and page 6.



**KEMET Electronics Corporation, P.O. Box 5928, Greenville, S.C. 29606 (864) 963-6300**

## RATINGS & PART NUMBER REFERENCE

| CAPACITANCE µF | CASE SIZE | CAPACITANCE TOLERANCE ±% | KEMET T111 SERIES: KEMET PART NUMBER | D.C. LEAKAGE µA@25°C MAX. | MAX. DISSIPATION FACTOR %@25°C, 120Hz | MIL-PRF-39003 (CSR91) CAPACITORS — DASH NUMBER REFERENCE FAILURE RATE LEVEL (%/1000 HRS.): MIL-PRF-39003/4C EXPONENTIAL: M (1.0) | P (0.1) | R (0.01) | S (0.001) | MIL-PRF-39003/4C GRADED: B (0.1) | C (0.01) | D (0.001) | KEMET EQUIVALENT MILITARY PART NUMBER |
|---|---|---|---|---|---|---|---|---|---|---|---|---|---|
| **15 VOLT RATING AT 85°C — 10 VOLT RATING AT 125°C** | | | | | | | | | | | | | |
| 1.3 | A | 10 | T111A135K015AS | 0.3 | 4 | 0250 | 0470 | 0690 | 0910 | 3027 | 4027 | 5027 | T213A135K015(1)S |
| 1.6 | A | 10 | T111A165K015AS | 0.4 | 4 | 0251 | 0471 | 0691 | 0911 | 3028 | 4028 | 5028 | T213A165K015(1)S |
| 1.6 | A | 20 | T111A165M015AS | 0.4 | 4 | 0252 | 0472 | 0692 | 0912 | 3029 | 4029 | 5029 | T213A165M015(1)S |
| 9.0 | B | 10 | T111B905K015AS | 2.0 | 6 | 0253 | 0473 | 0693 | 0913 | 3030 | 4030 | 5030 | T213B905K015(1)S |
| 11.0 | B | 10 | T111B116K015AS | 2.0 | 6 | 0254 | 0474 | 0694 | 0914 | 3031 | 4031 | 5031 | T213B116K015(1)S |
| 11.0 | B | 20 | T111B116M015AS | 2.0 | 6 | 0255 | 0475 | 0695 | 0915 | 3032 | 4032 | 5032 | T213B116M015(1)S |
| 28.0 | C | 10 | T111C286K015AS | 4.0 | 6 | 0256 | 0476 | 0696 | 0916 | 3033 | 4033 | 5033 | T213C286K015(1)S |
| 34.0 | C | 10 | T111C346K015AS | 5.0 | 6 | 0257 | 0477 | 0697 | 0917 | 3034 | 4034 | 5034 | T213C346K015(1)S |
| 34.0 | C | 20 | T111C346M015AS | 5.0 | 6 | 0258 | 0478 | 0698 | 0918 | 3035 | 4035 | 5035 | T213C346M015(1)S |
| 60.0 | D | 10 | T111D606K015AS | 6.0 | 6 | 0259 | 0479 | 0699 | 0919 | 3036 | 4036 | 5036 | T213D606K015(1)S |
| 75.0 | D | 10 | T111D756K015AS | 10.0 | 6 | 0260 | 0480 | 0700 | 0920 | 3037 | 4037 | 5037 | T213D756K015(1)S |
| 75.0 | D | 20 | T111D756M015AS | 10.0 | 6 | 0261 | 0481 | 0701 | 0921 | 3038 | 4038 | 5038 | T213D756M015(1)S |
| **20 VOLT RATING AT 85°C — 13 VOLT RATING AT 125°C** | | | | | | | | | | | | | |
| 0.6 | A | 10 | T111A604K020AS | 0.3 | 4 | 0262 | 0482 | 0702 | 0922 | 3039 | 4039 | 5039 | T213A604K020(1)S |
| 0.75 | A | 10 | T111A754K020AS | 0.3 | 4 | 0263 | 0483 | 0703 | 0923 | 3040 | 4040 | 5040 | T213A754K020(1)S |
| 0.75 | A | 20 | T111A754M020AS | 0.3 | 4 | 0264 | 0484 | 0704 | 0924 | 3041 | 4041 | 5041 | T213A754M020(1)S |
| 0.9 | A | 10 | T111A904K020AS | 0.3 | 4 | 0265 | 0485 | 0705 | 0925 | 3042 | 4042 | 5042 | T213A904K020(1)S |
| 1.1 | A | 10 | T111A115K020AS | 0.4 | 4 | 0266 | 0486 | 0706 | 0926 | 3043 | 4043 | 5043 | T213A115K020(1)S |
| 1.1 | A | 20 | T111A115M020AS | 0.4 | 4 | 0267 | 0487 | 0707 | 0927 | 3044 | 4044 | 5044 | T213A115M020(1)S |
| 4.1 | B | 10 | T111B415K020AS | 1.0 | 6 | 0268 | 0488 | 0708 | 0928 | 3045 | 4045 | 5045 | T213B415K020(1)S |
| 5.0 | B | 10 | T111B505K020AS | 1.0 | 6 | 0269 | 0489 | 0709 | 0929 | 3046 | 4046 | 5046 | T213B505K020(1)S |
| 5.0 | B | 20 | T111B505M020AS | 1.0 | 6 | 0270 | 0490 | 0710 | 0930 | 3047 | 4047 | 5047 | T213B505M020(1)S |
| 6.0 | B | 10 | T111B605K020AS | 1.0 | 6 | 0271 | 0491 | 0711 | 0931 | 3048 | 4048 | 5048 | T213B605K020(1)S |
| 7.5 | B | 10 | T111B755K020AS | 2.0 | 6 | 0272 | 0492 | 0712 | 0932 | 3049 | 4049 | 5049 | T213B755K020(1)S |
| 7.5 | B | 20 | T111B755M020AS | 2.0 | 6 | 0273 | 0493 | 0713 | 0933 | 3050 | 4050 | 5050 | T213B755M020(1)S |
| 13.0 | C | 10 | T111C136K020AS | 2.5 | 6 | 0274 | 0494 | 0714 | 0934 | 3051 | 4051 | 5051 | T213C136K020(1)S |
| 16.0 | C | 10 | T111C166K020AS | 3.0 | 6 | 0275 | 0495 | 0715 | 0935 | 3052 | 4052 | 5052 | T213C166K020(1)S |
| 16.0 | C | 20 | T111C166M020AS | 3.0 | 6 | 0276 | 0496 | 0716 | 0936 | 3053 | 4053 | 5053 | T213C166M020(1)S |
| 19.0 | C | 10 | T111C196K020AS | 3.0 | 6 | 0277 | 0497 | 0717 | 0937 | 3054 | 4054 | 5054 | T213C196K020(1)S |
| 23.0 | C | 10 | T111C236K020AS | 4.5 | 6 | 0278 | 0498 | 0718 | 0938 | 3055 | 4055 | 5055 | T213C236K020(1)S |
| 23.0 | C | 20 | T111C236M020AS | 4.5 | 6 | 0279 | 0499 | 0719 | 0939 | 3056 | 4056 | 5056 | T213C236M020(1)S |
| 28.0 | D | 10 | T111D286K020AS | 5.5 | 6 | 0280 | 0500 | 0720 | 0940 | 3057 | 4057 | 5057 | T213D286K020(1)S |
| 34.0 | D | 10 | T111D346K020AS | 6.0 | 6 | 0281 | 0501 | 0721 | 0941 | 3058 | 4058 | 5058 | T213D346K020(1)S |
| 34.0 | D | 20 | T111D346M020AS | 6.0 | 6 | 0282 | 0502 | 0722 | 0942 | 3059 | 4059 | 5059 | T213D346M020(1)S |
| 41.0 | D | 10 | T111D416K020AS | 6.0 | 6 | 0283 | 0503 | 0723 | 0943 | 3060 | 4060 | 5060 | T213D416K020(1)S |
| 50.0 | D | 10 | T111D506K020AS | 10.0 | 6 | 0284 | 0504 | 0724 | 0944 | 3061 | 4061 | 5061 | T213D506K020(1)S |
| 50.0 | D | 20 | T111D506M020AS | 10.0 | 6 | 0285 | 0505 | 0725 | 0945 | 3062 | 4062 | 5062 | T213D506M020(1)S |
| **35 VOLT RATING AT 85°C — 23 VOLT RATING AT 125°C** | | | | | | | | | | | | | |
| 2.8 | B | 10 | T111B285K035AS | 1.0 | 4 | 0289 | 0509 | 0729 | 0949 | 3063 | 4063 | 5063 | T213B285K035(1)S |
| 3.4 | B | 10 | T111B345K035AS | 1.5 | 4 | 0290 | 0510 | 0730 | 0950 | 3064 | 4064 | 5064 | T213B345K035(1)S |
| 3.4 | B | 20 | T111B345M035AS | 1.5 | 4 | 0291 | 0511 | 0731 | 0951 | 3065 | 4065 | 5065 | T213B345M035(1)S |
| 11.0 | C | 10 | T111C116K035AS | 4.0 | 4 | 0292 | 0512 | 0732 | 0952 | 3066 | 4066 | 5066 | T213C116K035(1)S |
| 11.0 | C | 20 | T111C116M035AS | 4.0 | 4 | 0293 | 0513 | 0733 | 0953 | 3067 | 4067 | 5067 | T213C116M035(1)S |
| 13.0 | D | 10 | T111D136K035AS | 4.5 | 4 | 0294 | 0514 | 0734 | 0954 | 3068 | 4068 | 5068 | T213D136K035(1)S |
| 16.0 | D | 10 | T111D166K035AS | 5.5 | 4 | 0295 | 0515 | 0735 | 0955 | 3069 | 4069 | 5069 | T213D166K035(1)S |
| 16.0 | D | 20 | T111D166M035AS | 5.5 | 4 | 0296 | 0516 | 0736 | 0956 | 3070 | 4070 | 5070 | T213D166M035(1)S |
| 19.0 | D | 10 | T111D196K035AS | 6.0 | 4 | 0297 | 0517 | 0737 | 0957 | 3071 | 4071 | 5071 | T213D196K035(1)S |
| 23.0 | D | 10 | T111D236K035AS | 8.0 | 4 | 0298 | 0518 | 0738 | 0958 | 3072 | 4072 | 5072 | T213D236K035(1)S |
| 23.0 | D | 20 | T111D236M035AS | 8.0 | 4 | 0299 | 0519 | 0739 | 0959 | 3073 | 4073 | 5073 | T213D236M035(1)S |
| **50 VOLT RATING AT 85°C — 33 VOLT RATING AT 125°C** | | | | | | | | | | | | | |
| 0.0023 | A | 10 | T111A232K050AS | 0.1 | 2 | 1171 | 1241 | 1311 | 1381 | 3074 | 4074 | 5074 | T213A232K050(1)S |
| 0.0023 | A | 20 | T111A232M050AS | 0.1 | 2 | 1172 | 1242 | 1312 | 1382 | 3075 | 4075 | 5075 | T213A232M050(1)S |
| 0.0028 | A | 10 | T111A282K050AS | 0.1 | 2 | 1173 | 1243 | 1313 | 1383 | 3076 | 4076 | 5076 | T213A282K050(1)S |
| 0.0034 | A | 10 | T111A342K050AS | 0.1 | 2 | 1174 | 1244 | 1314 | 1384 | 3077 | 4077 | 5077 | T213A342K050(1)S |
| 0.0034 | A | 20 | T111A342M050AS | 0.1 | 2 | 1175 | 1245 | 1315 | 1385 | 3078 | 4078 | 5078 | T213A342M050(1)S |
| 0.0041 | A | 10 | T111A412K050AS | 0.1 | 2 | 1176 | 1246 | 1316 | 1386 | 3079 | 4079 | 5079 | T213A412K050(1)S |
| 0.005 | A | 10 | T111A502K050AS | 0.1 | 2 | 1177 | 1247 | 1317 | 1387 | 3080 | 4080 | 5080 | T213A502K050(1)S |
| 0.005 | A | 20 | T111A502M050AS | 0.1 | 2 | 1178 | 1248 | 1318 | 1388 | 3081 | 4081 | 5081 | T213A502M050(1)S |
| 0.006 | A | 10 | T111A602K050AS | 0.1 | 2 | 1179 | 1249 | 1319 | 1389 | 3082 | 4082 | 5082 | T213A602K050(1)S |
| 0.0075 | A | 10 | T111A752K050AS | 0.1 | 2 | 1180 | 1250 | 1320 | 1390 | 3083 | 4083 | 5083 | T213A752K050(1)S |
| 0.0075 | A | 20 | T111A752M050AS | 0.1 | 2 | 1181 | 1251 | 1321 | 1391 | 3084 | 4084 | 5084 | T213A752M050(1)S |
| 0.009 | A | 10 | T111A902K050AS | 0.1 | 2 | 1182 | 1252 | 1322 | 1392 | 3085 | 4085 | 5085 | T213A902K050(1)S |
| 0.011 | A | 10 | T111A113K050AS | 0.1 | 2 | 1183 | 1253 | 1323 | 1393 | 3086 | 4086 | 5086 | T213A113K050(1)S |
| 0.011 | A | 20 | T111A113M050AS | 0.1 | 2 | 1184 | 1254 | 1324 | 1394 | 3087 | 4087 | 5087 | T213A113M050(1)S |
| 0.013 | A | 10 | T111A133K050AS | 0.1 | 2 | 1185 | 1255 | 1325 | 1395 | 3088 | 4088 | 5088 | T213A133K050(1)S |
| 0.016 | A | 10 | T111A163K050AS | 0.1 | 2 | 1186 | 1256 | 1326 | 1396 | 3089 | 4089 | 5089 | T213A163K050(1)S |

(1) To complete T213 Series Part Number, insert Failure Rate Symbol in the 13th Character as shown on Page 6.

## RATINGS & PART NUMBER REFERENCE

| CAPACITANCE µF | CASE SIZE | CAPACITANCE TOLERANCE ±% | KEMET T111 SERIES: KEMET PART NUMBER | D.C. LEAKAGE µA@25°C MAX. | MAX. DISSIPATION FACTOR %@25°C, 120Hz | MIL-PRF-39003 (CSR91) CAPACITORS: DASH NUMBER REFERENCE FAILURE RATE LEVEL (%/1000 HRS.) MIL-PRF-39003/4C EXPONENTIAL: M (1.0) | P (0.1) | R (0.01) | S (0.001) | MIL-PRF-39003/4C GRADED: B (0.1) | C (0.01) | D (0.001) | KEMET EQUIVALENT MILITARY PART NUMBER |
|---|---|---|---|---|---|---|---|---|---|---|---|---|---|
| **50 VOLT RATING AT 85°C — 33 VOLT RATING AT 125°C (Cont'd)** | | | | | | | | | | | | | |
| 0.016 | A | 20 | T111A163M050AS | 0.1 | 2 | 1187 | 1257 | 1327 | 1397 | 3090 | 4090 | 5090 | T213A163M050(1)S |
| 0.019 | A | 10 | T111A193K050AS | 0.1 | 2 | 1188 | 1258 | 1328 | 1398 | 3091 | 4091 | 5091 | T213A193K050(1)S |
| 0.023 | A | 10 | T111A233K050AS | 0.1 | 2 | 1189 | 1259 | 1329 | 1399 | 3092 | 4092 | 5092 | T213A233K050(1)S |
| 0.023 | A | 20 | T111A233M050AS | 0.1 | 2 | 1190 | 1260 | 1330 | 1400 | 3093 | 4093 | 5093 | T213A233M050(1)S |
| 0.028 | A | 10 | T111A283K050AS | 0.1 | 2 | 1191 | 1261 | 1331 | 1401 | 3094 | 4094 | 5094 | T213A283K050(1)S |
| 0.034 | A | 10 | T111A343K050AS | 0.1 | 2 | 1192 | 1262 | 1332 | 1402 | 3095 | 4095 | 5095 | T213A343K050(1)S |
| 0.034 | A | 20 | T111A343M050AS | 0.1 | 2 | 1193 | 1263 | 1333 | 1403 | 3096 | 4096 | 5096 | T213A343M050(1)S |
| 0.041 | A | 10 | T111A413K050AS | 0.1 | 2 | 1194 | 1264 | 1334 | 1404 | 3097 | 4097 | 5097 | T213A413K050(1)S |
| 0.05 | A | 10 | T111A503K050AS | 0.3 | 2 | 1195 | 1265 | 1335 | 1405 | 3098 | 4098 | 5098 | T213A503K050(1)S |
| 0.05 | A | 20 | T111A503M050AS | 0.3 | 2 | 1196 | 1266 | 1336 | 1406 | 3099 | 4099 | 5099 | T213A503M050(1)S |
| 0.06 | A | 10 | T111A603K050AS | 0.3 | 2 | 1197 | 1267 | 1337 | 1407 | 3100 | 4100 | 5100 | T213A603K050(1)S |
| 0.075 | A | 10 | T111A753K050AS | 0.3 | 2 | 1198 | 1268 | 1338 | 1408 | 3101 | 4101 | 5101 | T213A753K050(1)S |
| 0.075 | A | 20 | T111A753M050AS | 0.3 | 2 | 1199 | 1269 | 1339 | 1409 | 3102 | 4102 | 5102 | T213A753M050(1)S |
| 0.09 | A | 10 | T111A903K050AS | 0.3 | 2 | 1200 | 1270 | 1340 | 1410 | 3103 | 4103 | 5103 | T213A903K050(1)S |
| 0.11 | A | 10 | T111A114K050AS | 0.3 | 2 | 1201 | 1271 | 1341 | 1411 | 3104 | 4104 | 5104 | T213A114K050(1)S |
| 0.11 | A | 20 | T111A114M050AS | 0.3 | 2 | 1202 | 1272 | 1342 | 1412 | 3105 | 4105 | 5105 | T213A114M050(1)S |
| 0.13 | A | 10 | T111A134K050AS | 0.3 | 2 | 1203 | 1273 | 1343 | 1413 | 3106 | 4106 | 5106 | T213A134K050(1)S |
| 0.16 | A | 10 | T111A164K050AS | 0.3 | 2 | 1204 | 1274 | 1344 | 1414 | 3107 | 4107 | 5107 | T213A164K050(1)S |
| 0.16 | A | 20 | T111A164M050AS | 0.3 | 2 | 1205 | 1275 | 1345 | 1415 | 3108 | 4108 | 5108 | T213A164M050(1)S |
| 0.19 | A | 10 | T111A194K050AS | 0.3 | 2 | 1206 | 1276 | 1346 | 1416 | 3109 | 4109 | 5109 | T213A194K050(1)S |
| 0.23 | A | 10 | T111A234K050AS | 0.3 | 2 | 1207 | 1277 | 1347 | 1417 | 3110 | 4110 | 5110 | T213A234K050(1)S |
| 0.23 | A | 20 | T111A234M050AS | 0.3 | 2 | 1208 | 1278 | 1348 | 1418 | 3111 | 4111 | 5111 | T213A234M050(1)S |
| 0.28 | A | 10 | T111A284K050AS | 0.3 | 2 | 1209 | 1279 | 1349 | 1419 | 3112 | 4112 | 5112 | T213A284K050(1)S |
| 0.34 | A | 10 | T111A344K050AS | 0.3 | 2 | 1210 | 1280 | 1350 | 1420 | 3113 | 4113 | 5113 | T213A344K050(1)S |
| 0.34 | A | 20 | T111A344M050AS | 0.3 | 2 | 1211 | 1281 | 1351 | 1421 | 3114 | 4114 | 5114 | T213A344M050(1)S |
| 0.41 | A | 10 | T111A414K050AS | 0.3 | 2 | 0300 | 0520 | 0740 | 0960 | 3115 | 4115 | 5115 | T213A414K050(1)S |
| 0.5 | A | 10 | T111A504K050AS | 0.4 | 2 | 0301 | 0521 | 0741 | 0961 | 3116 | 4116 | 5116 | T213A504K050(1)S |
| 0.5 | A | 20 | T111A504M050AS | 0.4 | 2 | 0302 | 0522 | 0742 | 0962 | 3117 | 4117 | 5117 | T213A504M050(1)S |
| 0.6 | B | 10 | T111B604K050AS | 0.4 | 4 | 1212 | 1282 | 1352 | 1422 | 3118 | 4118 | 5118 | T213B604K050(1)S |
| 0.6 | B | 20 | T111B604M050AS | 0.4 | 4 | | | | | | | | |
| 0.75 | B | 10 | T111B754K050AS | 0.5 | 4 | 2001 | 2101 | 2201 | 2301 | 3119 | 4119 | 5119 | T213B754K050(1)S |
| 0.75 | B | 20 | T111B754M050AS | 0.5 | 4 | 2002 | 2102 | 2202 | 2302 | 3120 | 4120 | 5120 | T213B754M050(1)S |
| 0.9 | B | 10 | T111B904K050AS | 0.5 | 4 | 1215 | 1285 | 1355 | 1425 | 3121 | 4121 | 5121 | T213B904K050(1)S |
| 0.9 | B | 20 | T111B904M050AS | 0.5 | 4 | | | | | | | | |
| 1.1 | B | 10 | T111B115K050AS | 0.8 | 4 | 1216 | 1286 | 1356 | 1426 | 3122 | 4122 | 5122 | T213B115K050(1)S |
| 1.1 | B | 20 | T111B115M050AS | 0.8 | 4 | 1217 | 1287 | 1357 | 1427 | 3123 | 4123 | 5123 | T213B115M050(1)S |
| 1.3 | B | 10 | T111B135K050AS | 1.0 | 4 | 1218 | 1288 | 1358 | 1428 | 3124 | 4124 | 5124 | T213B135K050(1)S |
| 1.3 | B | 20 | T111B135M050AS | 1.0 | 4 | | | | | | | | |
| 1.6 | B | 10 | T111B165K050AS | 1.2 | 4 | 1219 | 1289 | 1359 | 1429 | 3125 | 4125 | 5125 | T213B165K050(1)S |
| 1.6 | B | 20 | T111B165M050AS | 1.2 | 4 | 1220 | 1290 | 1360 | 1430 | 3126 | 4126 | 5126 | T213B165M050(1)S |
| 1.9 | B | 10 | T111B195K050AS | 1.5 | 4 | 1221 | 1291 | 1361 | 1431 | 3127 | 4127 | 5127 | T213B195K050(1)S |
| 1.9 | B | 20 | T111B195M050AS | 1.5 | 4 | | | | | | | | |
| 2.3 | B | 10 | T111B235K050AS | 1.7 | 4 | 1222 | 1292 | 1362 | 1432 | 3128 | 4128 | 5128 | T213B235K050(1)S |
| 2.3 | B | 20 | T111B235M050AS | 1.7 | 4 | 1223 | 1293 | 1363 | 1433 | 3129 | 4129 | 5129 | T213B235M050(1)S |
| 2.8 | C | 10 | T111C285K050AS | 2.2 | 4 | 1224 | 1294 | 1364 | 1434 | 3130 | 4130 | 5130 | T213C285K050(1)S |
| 2.8 | C | 20 | T111C285M050AS | 2.2 | 4 | | | | | | | | |
| 3.4 | C | 10 | T111C345K050AS | 2.2 | 4 | 1225 | 1295 | 1365 | 1435 | 3131 | 4131 | 5131 | T213C345K050(1)S |
| 3.4 | C | 20 | T111C345M050AS | 2.2 | 4 | 1226 | 1296 | 1366 | 1436 | 3132 | 4132 | 5132 | T213C345M050(1)S |
| 4.1 | C | 10 | T111C415K050AS | 2.5 | 4 | 1227 | 1297 | 1367 | 1437 | 3133 | 4133 | 5133 | T213C415K050(1)S |
| 4.1 | C | 20 | T111C415M050AS | 2.5 | 4 | | | | | | | | |
| 5.0 | C | 10 | T111C505K050AS | 2.5 | 4 | 1228 | 1298 | 1368 | 1438 | 3134 | 4134 | 5134 | T213C505K050(1)S |
| 5.0 | C | 20 | T111C505M050AS | 2.5 | 4 | 1229 | 1299 | 1369 | 1439 | 3135 | 4135 | 5135 | T213C505M050(1)S |
| 6.0 | C | 10 | T111C605K050AS | 3.0 | 4 | 0303 | 0523 | 0743 | 0963 | 3136 | 4136 | 5136 | T213C605K050(1)S |
| 6.0 | C | 20 | T111C605M050AS | 3.0 | 4 | | | | | | | | |
| 7.5 | C | 10 | T111C755K050AS | 4.1 | 4 | 0304 | 0524 | 0744 | 0964 | 3137 | 4137 | 5137 | T213C755K050(1)S |
| 7.5 | C | 20 | T111C755M050AS | 4.1 | 4 | 0305 | 0525 | 0745 | 0965 | 3138 | 4138 | 5138 | T213C755M050(1)S |
| 9.0 | C | 10 | T111C905K050AS | 4.5 | 4 | 0306 | 0526 | 0746 | 0966 | 3139 | 4139 | 5139 | T213C905K050(1)S |
| 9.0 | C | 20 | T111C905M050AS | 4.5 | 4 | | | | | | | | |
| 11.0 | D | 10 | T111D116K050AS | 5.5 | 4 | 0307 | 0527 | 0747 | 0967 | 3140 | 4140 | 5140 | T213D116K050(1)S |
| 11.0 | D | 20 | T111D116M050AS | 5.5 | 4 | 0308 | 0528 | 0748 | 0968 | 3141 | 4141 | 5141 | T213D116M050(1)S |
| **75 VOLT RATING AT 85°C — 50 VOLT RATING AT 125°C** | | | | | | | | | | | | | |
| 0.34 | A | 10 | T111A344K075AS | 0.3 | 2 | 0309 | 0529 | 0749 | 0969 | 3142 | 4142 | 5142 | T213A344K075(1)S |
| 0.34 | A | 20 | T111A344M075AS | 0.3 | 2 | 0310 | 0530 | 0750 | 0970 | 3143 | 4143 | 5143 | T213A344M075(1)S |
| 0.41 | B | 10 | T111B414K075AS | 0.3 | 2 | 2008 | 2108 | 2208 | 2308 | 3144 | 4144 | 5144 | T213B414K075(1)S |
| 0.5 | B | 10 | T111B504K075AS | 0.4 | 2 | 2009 | 2109 | 2209 | 2309 | 3145 | 4145 | 5145 | T213B504K075(1)S |
| 0.5 | B | 20 | T111B504M075AS | 0.4 | 2 | 2010 | 2110 | 2210 | 2310 | 3146 | 4146 | 5146 | T213B504M075(1)S |
| 0.6 | B | 10 | T111B604K075AS | 0.4 | 4 | 2011 | 2111 | 2211 | 2311 | 3147 | 4147 | 5147 | T213B604K075(1)S |
| 0.75 | B | 10 | T111B754K075AS | 0.6 | 4 | 2012 | 2112 | 2212 | 2312 | 3148 | 4148 | 5148 | T213B754K075(1)S |
| 0.75 | B | 20 | T111B754M075AS | 0.6 | 4 | 2013 | 2113 | 2213 | 2313 | 3149 | 4149 | 5149 | T213B754M075(1)S |

(1) To complete T213 Series Part Number, insert Failure Rate Symbol in the 13th Character as shown on Page 6.

## RATINGS & PART NUMBER REFERENCE

| CAPACITANCE µF | CASE SIZE | CAPACITANCE TOLERANCE ±% | KEMET T111 SERIES: KEMET PART NUMBER | D.C. LEAKAGE µA@25°C MAX. | MAX. DISSIPATION FACTOR %@25°C, 120Hz | MIL-PRF-39003 (CSR91) CAPACITORS — DASH NUMBER REFERENCE FAILURE RATE LEVEL (%/1000 HRS.) — MIL-PRF-39003/4C EXPONENTIAL: M (1.0) | P (0.1) | R (0.01) | S (0.001) | MIL-PRF-39003/4C GRADED: B (0.1) | C (0.01) | D (0.001) | KEMET EQUIVALENT MILITARY PART NUMBER |
|---|---|---|---|---|---|---|---|---|---|---|---|---|---|
| **75 VOLT RATING AT 85°C — 50 VOLT RATING AT 125°C (Cont'd)** | | | | | | | | | | | | | |
| 0.9 | B | 10 | T111B904K075AS | 0.7 | 4 | 2014 | 2114 | 2214 | 2314 | 3150 | 4150 | 5150 | T213B904K075(1)S |
| 1.1 | B | 10 | T111B115K075AS | 0.8 | 4 | 2015 | 2115 | 2215 | 2315 | 3151 | 4151 | 5151 | T213B115K075(1)S |
| 1.1 | B | 20 | T111B115M075AS | 0.8 | 4 | 2016 | 2116 | 2216 | 2316 | 3152 | 4152 | 5152 | T213B115M075(1)S |
| 1.3 | B | 10 | T111B135K075AS | 1.0 | 4 | 2017 | 2117 | 2217 | 2317 | 3153 | 4153 | 5153 | T213B135K075(1)S |
| 1.6 | B | 10 | T111B165K075AS | 1.2 | 4 | 0311 | 0531 | 0751 | 0971 | 3154 | 4154 | 5154 | T213B165K075(1)S |
| 1.6 | B | 20 | T111B165M075AS | 1.2 | 4 | 0312 | 0532 | 0752 | 0972 | 3155 | 4155 | 5155 | T213B165M075(1)S |
| 1.9 | B | 10 | T111B195K075AS | 1.5 | 4 | 0313 | 0533 | 0753 | 0973 | 3156 | 4156 | 5156 | T213B195K075(1)S |
| 2.3 | C | 10 | T111C235K075AS | 3.0 | 4 | 2003 | 2103 | 2203 | 2303 | 3157 | 4157 | 5157 | T213C235K075(1)S |
| 2.3 | C | 20 | T111C235M075AS | 3.0 | 4 | 2004 | 2104 | 2204 | 2304 | 3158 | 4158 | 5158 | T213C235M075(1)S |
| 2.8 | C | 10 | T111C285K075AS | 3.0 | 4 | 2005 | 2105 | 2205 | 2305 | 3159 | 4159 | 5159 | T213C285K075(1)S |
| 3.4 | C | 10 | T111C345K075AS | 5.0 | 4 | 2006 | 2106 | 2206 | 2306 | 3160 | 4160 | 5160 | T213C345K075(1)S |
| 3.4 | C | 20 | T111C345M075AS | 5.0 | 4 | 2007 | 2107 | 2207 | 2307 | 3161 | 4161 | 5161 | T213C345M075(1)S |
| 4.1 | C | 10 | T111C415K075AS | 5.0 | 4 | 0314 | 0534 | 0754 | 0974 | 3162 | 4162 | 5162 | T213C415K075(1)S |
| 5.0 | C | 10 | T111C505K075AS | 5.0 | 4 | 0315 | 0535 | 0755 | 0975 | 3163 | 4163 | 5163 | T213C505K075(1)S |
| 5.0 | C | 20 | T111C505M075AS | 5.0 | 4 | 0316 | 0536 | 0756 | 0976 | 3164 | 4164 | 5164 | T213C505M075(1)S |
| 6.0 | D | 10 | T111D605K075AS | 5.0 | 4 | 0317 | 0537 | 0757 | 0977 | 3165 | 4165 | 5165 | T213D605K075(1)S |
| 7.5 | D | 10 | T111D755K075AS | 7.0 | 4 | 0318 | 0538 | 0758 | 0978 | 3166 | 4166 | 5166 | T213D755K075(1)S |
| 7.5 | D | 20 | T111D755M075AS | 7.0 | 4 | 0319 | 0539 | 0759 | 0979 | 3167 | 4167 | 5167 | T213D755M075(1)S |
| **100 VOLT RATING AT 85°C — 67 VOLT RATING AT 125°C** | | | | | | | | | | | | | |
| 0.0023 | A | 10 | T111A232K100AS | 0.3 | 2 | 0320 | 0540 | 0760 | 0980 | 3168 | 4168 | * | T213A232K100(1)S |
| 0.0023 | A | 20 | T111A232M100AS | 0.3 | 2 | 0321 | 0541 | 0761 | 0981 | 3169 | 4169 | * | T213A232M100(1)S |
| 0.0028 | A | 10 | T111A282K100AS | 0.3 | 2 | 0322 | 0542 | 0762 | 0982 | 3170 | 4170 | * | T213A282K100(1)S |
| 0.0034 | A | 10 | T111A342K100AS | 0.3 | 2 | 0323 | 0543 | 0763 | 0983 | 3171 | 4171 | * | T213A342K100(1)S |
| 0.0034 | A | 20 | T111A342M100AS | 0.3 | 2 | 0324 | 0544 | 0764 | 0984 | 3172 | 4172 | * | T213A342M100(1)S |
| 0.0041 | A | 10 | T111A412K100AS | 0.3 | 2 | 0325 | 0545 | 0765 | 0985 | 3173 | 4173 | * | T213A412K100(1)S |
| 0.005 | A | 10 | T111A502K100AS | 0.3 | 2 | 0326 | 0546 | 0766 | 0986 | 3174 | 4174 | * | T213A502K100(1)S |
| 0.005 | A | 20 | T111A502M100AS | 0.3 | 2 | 0327 | 0547 | 0767 | 0987 | 3175 | 4175 | * | T213A502M100(1)S |
| 0.006 | A | 10 | T111A602K100AS | 0.3 | 2 | 0328 | 0548 | 0768 | 0988 | 3176 | 4176 | * | T213A602K100(1)S |
| 0.0075 | A | 10 | T111A752K100AS | 0.3 | 2 | 0329 | 0549 | 0769 | 0989 | 3177 | 4177 | * | T213A752K100(1)S |
| 0.0075 | A | 20 | T111A752M100AS | 0.3 | 2 | 0330 | 0550 | 0770 | 0990 | 3178 | 4178 | * | T213A752M100(1)S |
| 0.009 | A | 10 | T111A902K100AS | 0.3 | 2 | 0331 | 0551 | 0771 | 0991 | 3179 | 4179 | * | T213A902K100(1)S |
| 0.011 | A | 10 | T111A113K100AS | 0.3 | 2 | 0332 | 0552 | 0772 | 0992 | 3180 | 4180 | * | T213A113K100(1)S |
| 0.011 | A | 20 | T111A113M100AS | 0.3 | 2 | 0333 | 0553 | 0773 | 0993 | 3181 | 4181 | * | T213A113M100(1)S |
| 0.013 | A | 10 | T111A133K100AS | 0.3 | 2 | 0334 | 0554 | 0774 | 0994 | 3182 | 4182 | * | T213A133K100(1)S |
| 0.016 | A | 10 | T111A163K100AS | 0.3 | 2 | 0335 | 0555 | 0775 | 0995 | 3183 | 4183 | * | T213A163K100(1)S |
| 0.016 | A | 20 | T111A163M100AS | 0.3 | 2 | 0336 | 0556 | 0776 | 0996 | 3184 | 4184 | * | T213A163M100(1)S |
| 0.019 | A | 10 | T111A193K100AS | 0.3 | 2 | 0337 | 0557 | 0777 | 0997 | 3185 | 4185 | * | T213A193K100(1)S |
| 0.023 | A | 10 | T111A233K100AS | 0.3 | 2 | 0338 | 0558 | 0778 | 0998 | 3186 | 4186 | * | T213A233K100(1)S |
| 0.023 | A | 20 | T111A233M100AS | 0.3 | 2 | 0339 | 0559 | 0779 | 0999 | 3187 | 4187 | * | T213A233M100(1)S |
| 0.028 | A | 10 | T111A283K100AS | 0.3 | 2 | 0340 | 0560 | 0780 | 1000 | 3188 | 4188 | * | T213A283K100(1)S |
| 0.034 | A | 10 | T111A343K100AS | 0.3 | 2 | 0341 | 0561 | 0781 | 1001 | 3189 | 4189 | * | T213A343K100(1)S |
| 0.034 | A | 20 | T111A343M100AS | 0.3 | 2 | 0342 | 0562 | 0782 | 1002 | 3190 | 4190 | * | T213A343M100(1)S |
| 0.041 | A | 10 | T111A413K100AS | 0.3 | 2 | 0343 | 0563 | 0783 | 1003 | 3191 | 4191 | * | T213A413K100(1)S |
| 0.05 | A | 10 | T111A503K100AS | 0.3 | 2 | 0344 | 0564 | 0784 | 1004 | 3192 | 4192 | * | T213A503K100(1)S |
| 0.05 | A | 20 | T111A503M100AS | 0.3 | 2 | 0345 | 0565 | 0785 | 1005 | 3193 | 4193 | * | T213A503M100(1)S |
| 0.06 | A | 10 | T111A603K100AS | 0.3 | 2 | 0346 | 0566 | 0786 | 1006 | 3194 | 4194 | * | T213A603K100(1)S |
| 0.075 | A | 10 | T111A753K100AS | 0.3 | 2 | 0347 | 0567 | 0787 | 1007 | 3195 | 4195 | * | T213A753K100(1)S |
| 0.075 | A | 20 | T111A753M100AS | 0.3 | 2 | 0348 | 0568 | 0788 | 1008 | 3196 | 4196 | * | T213A753M100(1)S |
| 0.09 | A | 10 | T111A903K100AS | 0.3 | 2 | 0349 | 0569 | 0789 | 1009 | 3197 | 4197 | * | T213A903K100(1)S |
| 0.11 | A | 10 | T111A114K100AS | 0.3 | 2 | 0350 | 0570 | 0790 | 1010 | 3198 | 4198 | * | T213A114K100(1)S |
| 0.11 | A | 20 | T111A114M100AS | 0.3 | 2 | 0351 | 0571 | 0791 | 1011 | 3199 | 4199 | * | T213A114M100(1)S |
| 0.13 | A | 10 | T111A134K100AS | 0.3 | 2 | 0352 | 0572 | 0792 | 1012 | 3200 | 4200 | * | T213A134K100(1)S |
| 0.16 | A | 10 | T111A164K100AS | 0.3 | 2 | 0353 | 0573 | 0793 | 1013 | 3201 | 4201 | * | T213A164K100(1)S |
| 0.16 | A | 20 | T111A164M100AS | 0.3 | 2 | 0354 | 0574 | 0794 | 1014 | 3202 | 4202 | * | T213A164M100(1)S |
| 0.19 | A | 10 | T111A194K100AS | 0.3 | 2 | 0355 | 0575 | 0795 | 1015 | 3203 | 4203 | * | T213A194K100(1)S |
| 0.23 | A | 10 | T111A234K100AS | 0.3 | 2 | 0356 | 0576 | 0796 | 1016 | 3204 | 4204 | * | T213A234K100(1)S |
| 0.23 | A | 20 | T111A234M100AS | 0.3 | 2 | 0357 | 0577 | 0797 | 1017 | 3205 | 4205 | * | T213A234M100(1)S |
| 0.28 | A | 10 | T111A284K100AS | 0.3 | 2 | 0358 | 0578 | 0798 | 1018 | 3206 | 4206 | * | T213A284K100(1)S |
| 0.34 | B | 10 | T111B344K100AS | 0.3 | 2 | 0359 | 0579 | 0799 | 1019 | 3207 | 4207 | * | T213B344K100(1)S |
| 0.34 | B | 20 | T111B344M100AS | 0.3 | 2 | 0360 | 0580 | 0800 | 1020 | 3208 | 4208 | * | T213B344M100(1)S |
| 0.41 | B | 10 | T111B414K100AS | 0.4 | 2 | 0361 | 0581 | 0801 | 1021 | 3209 | 4209 | * | T213B414K100(1)S |
| 0.5 | B | 10 | T111B504K100AS | 0.5 | 2 | 0362 | 0582 | 0802 | 1022 | 3210 | 4210 | * | T213B504K100(1)S |
| 0.5 | B | 20 | T111B504M100AS | 0.5 | 2 | 0363 | 0583 | 0803 | 1023 | 3211 | 4211 | * | T213B504M100(1)S |
| 0.6 | B | 10 | T111B604K100AS | 0.5 | 3 | 0364 | 0584 | 0804 | 1024 | 3212 | 4212 | * | T213B604K100(1)S |
| 0.75 | B | 10 | T111B754K100AS | 0.7 | 3 | 0365 | 0585 | 0805 | 1025 | 3213 | 4213 | * | T213B754K100(1)S |
| 0.75 | B | 20 | T111B754M100AS | 0.7 | 3 | 0366 | 0586 | 0806 | 1026 | 3214 | 4214 | * | T213B754M100(1)S |
| 0.9 | B | 10 | T111B904K100AS | 0.7 | 3 | 0367 | 0587 | 0807 | 1027 | 3215 | 4215 | * | T213B904K100(1)S |
| 1.1 | B | 10 | T111B115K100AS | 0.9 | 3 | 0368 | 0588 | 0808 | 1028 | 3216 | 4216 | * | T213B115K100(1)S |
| 1.1 | B | 20 | T111B115M100AS | 0.9 | 3 | 0369 | 0589 | 0809 | 1029 | 3217 | 4217 | * | T213B115M100(1)S |
| 1.3 | B | 10 | T111B135K100AS | 1.1 | 3 | 0370 | 0590 | 0810 | 1030 | 3218 | 4218 | * | T213B135K100(1)S |

(1) To complete T213 Series Part Number, insert Failure Rate Symbol in the 13th Character as shown on Page 6. ***Note: D failure rate — Not QPL for 5168 thru 5218**

# TANTALUM HERMETICALLY SEALED / AXIAL — MIL-PRF-39003

## T222 SERIES — POLAR MINIATURE (CSR09)

KEMET ultra-miniature T222 Series solid tantalum capacitors are designed especially for miniaturization.

The T222 Series capacitors employ a unique glass-to-metal compression end seal which has no protruding eyelet. This flush end seal construction makes T222 Series capacitors ideally suited for all miniature high density packaging applications. The capacitors consist of a dry porous tantalum pellet hermetically sealed in a solder coated metal case with solder coated alloy 52 and solder coated nickel leads.

The T222 series is approved to MIL-PRF-39003/2, all ratings and failure rates.

## CAPACITOR OUTLINE DRAWINGS

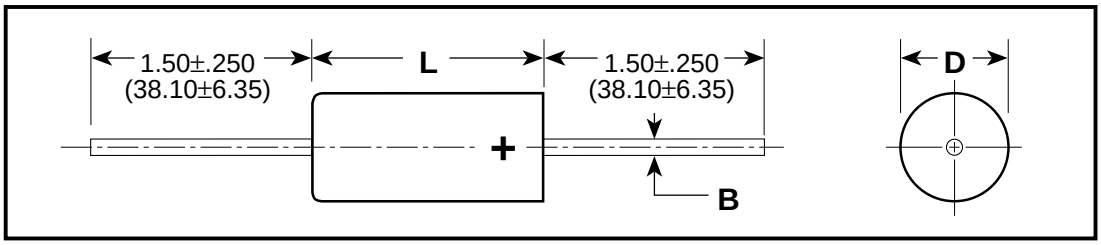


## DIMENSIONS — INCHES & (MILLIMETERS)

| CASE SIZE | UNINSULATED D ±0.005 (±.13) | UNINSULATED L | INSULATED D | INSULATED L | B WIRE DIAMETER |
|---|---|---|---|---|---|
| A | .085 (2.16) | .245 + .015 (6.22 + .38) - .010 (-.25) | .090 ± .009 (2.29 ± .23) | .250 + .031 (6.35 + .79) - .015 (-.38) | .016 + .005 (.41 + .13) - .001 (-.03) |
| B | .127 (3.23) | .375 ± .015 (.53 ± .38) | .138 ± .010 (3.51 ± .25) | .390 ± .015 (9.91 ± .38) | .016 + .005 (.41 + .13) -.001 (-.03) |

## ORDERING INFORMATION

**T 222 A 225 K 010 B S C***

**TANTALUM** — T

**SERIES (CSR09)** — 222

**CASE SIZE**
A / B — A

**PICOFARAD CODE**
First two digits represent significant figures.
3rd digit specifies no. of zeros to follow. — 225

**CAPACITANCE TOLERANCE**
M — ±20 K — ±10 J — ±5 — K

**VOLTAGE**
at 85°C — 010

**FAILURE RATE LEVEL****

| GRADED | EXPONENTIAL |
|---|---|
| B — 0.1%/k hrs. | M — 1%/k hrs. |
| C — 0.01%/k hrs. | P — 0.1%/k hrs. |
| D — 0.001%/k hrs. | R — 001%/k hrs. |
| . | S — 0.001%k hrs. |

**LEAD MATERIAL**
S — Standard
Positive: Alloy 52 (solder coated)
Negative: Solder coated nickel — S

**SPECIFICATION**
All capacitors are sleeved unless specified. — C*

***Part Number Example: T222A225K010BS (14 digits - no spaces)**

****Failure Rates apply only to military products**

**For Military Ordering, see page 4.**

## CSR09 CAPACITOR MARKINGS PER MIL-PRF-39003

| | |
|---|---|
| 39003 | Military specification number |
| 02 - K | Specification sheet number and trademark |
| 2961J | Nonsignificant dash number and “J” for JAN |
| +333 | Polarity, date code (1st digit indicates year and the next two digits indicate the week) |
| XX | and lot symbol |

## RATINGS & PART NUMBER REFERENCE

| CAPACITANCE µF | CASE SIZE | CAPACITANCE TOLERANCE ±% | KEMET T222 SERIES: KEMET PART NUMBER | D.C. LEAKAGE µA@25°C MAX. | MAX. DISSIPATION FACTOR %@25°C, 120Hz | MIL-PRF-39003 (CSR09) CAPACITORS — DASH NUMBER REFERENCE FAILURE RATE LEVEL (%/1000 HRS.): MIL-PRF-39003/2D EXPONENTIAL: M (1.0) | P (0.1) | R (0.01) | S (0.001) | MIL-PRF-39003/2D GRADED: B (0.1) | C (0.01) | D (0.001) |
|---|---|---|---|---|---|---|---|---|---|---|---|---|
| **6 VOLT RATING AT 85°C — 4 VOLT RATING AT 125°C** | | | | | | | | | | | | |
| 2.7 | A | 5 | T222A275J006(1)S | 0.6 | 6 | 1001 | 1061 | 1121 | 1181 | 2001 | 3001 | 4001 |
| **2.7** | **A** | **10** | **T222A275K006(1)S** | **0.6** | **6** | **0001** | **0061** | **0121** | **0181** | **2002** | **3002** | **4002** |
| 18.0 | B | 5 | T222B186J006(1)S | 1.4 | 6 | 1002 | 1062 | 1122 | 1182 | 2003 | 3003 | 4003 |
| 18.0 | B | 10 | T222B186K006(1)S | 1.4 | 6 | 0002 | 0062 | 0122 | 0182 | 2004 | 3004 | 4004 |
| **10 VOLT RATING AT 85°C — 7 VOLT RATING AT 125°C** | | | | | | | | | | | | |
| 1.8 | A | 5 | T222A185J010(1)S | 0.6 | 6 | 1007 | 1067 | 1127 | 1187 | 2005 | 3005 | 4005 |
| 1.8 | A | 10 | T222A185K010(1)S | 0.6 | 6 | 0007 | 0067 | 0127 | 0187 | 2006 | 3006 | 4006 |
| 2.2 | A | 5 | T222A225J010(1)S | 0.6 | 6 | 1008 | 1068 | 1128 | 1188 | 2007 | 3007 | 4007 |
| **2.2** | **A** | **10** | **T222A225K010(1)S** | **0.6** | **6** | **0008** | **0068** | **0128** | **0188** | **2008** | **3008** | **4008** |
| 10.0 | B | 5 | T222B106J010(1)S | 2.0 | 6 | 1009 | 1069 | 1129 | 1189 | 2009 | 3009 | 4009 |
| 10.0 | B | 10 | T222B106K010(1)S | 2.0 | 6 | 0009 | 0069 | 0129 | 0189 | 2010 | 3010 | 4010 |
| 12.0 | B | 5 | T222B126J010(1)S | 2.0 | 6 | 1010 | 1070 | 1130 | 1190 | 2011 | 3011 | 4011 |
| 12.0 | B | 10 | T222B126K010(1)S | 2.0 | 6 | 0010 | 0070 | 0130 | 0190 | 2012 | 3012 | 4012 |
| 15.0 | B | 5 | T222B156J010(1)S | 2.0 | 6 | 1011 | 1071 | 1131 | 1191 | 2013 | 3013 | 4013 |
| 15.0 | B | 10 | T222B156K010(1)S | 2.0 | 6 | 0011 | 0071 | 0131 | 0191 | 2014 | 3014 | 4014 |
| **15 VOLT RATING AT 85°C — 10 VOLT RATING AT 125°C** | | | | | | | | | | | | |
| 1.0 | A | 5 | T222A105J015(1)S | 0.6 | 6 | 1012 | 1072 | 1132 | 1192 | 2015 | 3015 | 4015 |
| 1.0 | A | 10 | T222A105K015(1)S | 0.6 | 6 | 0012 | 0072 | 0132 | 0192 | 2016 | 3016 | 4016 |
| 1.2 | A | 5 | T222A125J015(1)S | 0.6 | 6 | 1013 | 1073 | 1133 | 1193 | 2017 | 3017 | 4017 |
| 1.2 | A | 10 | T222A125K015(1)S | 0.6 | 6 | 0013 | 0073 | 0133 | 0193 | 2018 | 3018 | 4018 |
| 1.5 | A | 5 | T222A155J015(1)S | 0.6 | 6 | 1014 | 1074 | 1134 | 1194 | 2019 | 3019 | 4019 |
| **1.5** | **A** | **10** | **T222A155K015(1)S** | **0.6** | **6** | **0014** | **0074** | **0134** | **0194** | **2020** | **3020** | **4020** |
| 8.2 | B | 5 | T222B825J015(1)S | 1.8 | 6 | 1015 | 1075 | 1135 | 1195 | 2021 | 3021 | 4021 |
| 8.2 | B | 10 | T222B825K015(1)S | 1.8 | 6 | 0015 | 0075 | 0135 | 0195 | 2022 | 3022 | 4022 |
| **20 VOLT RATING AT 85°C — 13 VOLT RATING AT 125°C** | | | | | | | | | | | | |
| 0.56 | A | 5 | T222A564J020(1)S | 0.6 | 3 | 1016 | 1076 | 1136 | 1196 | 2023 | 3023 | 4023 |
| 0.56 | A | 10 | T222A564K020(1)S | 0.6 | 3 | 0016 | 0076 | 0136 | 0196 | 2024 | 3024 | 4024 |
| 0.68 | A | 5 | T222A684J020(1)S | 0.6 | 3 | 1017 | 1077 | 1137 | 1197 | 2025 | 3025 | 4025 |
| 0.68 | A | 10 | T222A684K020(1)S | 0.6 | 3 | 0017 | 0077 | 0137 | 0197 | 2026 | 3026 | 4026 |
| 0.82 | A | 5 | T222A824J020(1)S | 0.6 | 3 | 1018 | 1078 | 1138 | 1198 | 2027 | 3027 | 4027 |
| 0.82 | A | 10 | T222A824K020(1)S | 0.6 | 3 | 0018 | 0078 | 0138 | 0198 | 2028 | 3028 | 4028 |
| 1.0 | A | 5 | T222A105J020(1)S | 0.6 | 3 | 1019 | 1079 | 1139 | 1199 | 2029 | 3029 | 4029 |
| **1.0** | **A** | **10** | **T222A105K020(1)S** | **0.6** | **3** | **0019** | **0079** | **0139** | **0199** | **2030** | **3030** | **4030** |
| 3.3 | B | 5 | T222B335J020(1)S | 1.0 | 3 | 1020 | 1080 | 1140 | 1200 | 2031 | 3031 | 4031 |
| 3.3 | B | 10 | T222B335K020(1)S | 1.0 | 3 | 0020 | 0080 | 0140 | 0200 | 2032 | 3032 | 4032 |
| 3.9 | B | 5 | T222B395J020(1)S | 2.0 | 3 | 1021 | 1081 | 1141 | 1201 | 2033 | 3033 | 4033 |
| 3.9 | B | 10 | T222B395K020(1)S | 2.0 | 3 | 0021 | 0081 | 0141 | 0201 | 2034 | 3034 | 4034 |
| 4.7 | B | 5 | T222B475J020(1)S | 2.0 | 3 | 1022 | 1082 | 1142 | 1202 | 2035 | 3035 | 4035 |
| **4.7** | **B** | **10** | **T222B475K020(1)S** | **2.0** | **3** | **0022** | **0082** | **0142** | **0202** | **2036** | **3036** | **4036** |
| 5.6 | B | 5 | T222B565J020(1)S | 2.0 | 3 | 1023 | 1083 | 1143 | 1203 | 2037 | 3037 | 4037 |
| 5.6 | B | 10 | T222B565K020(1)S | 2.0 | 3 | 0023 | 0083 | 0143 | 0203 | 2038 | 3038 | 4038 |
| 6.8 | B | 5 | T222B685J020(1)S | 2.0 | 3 | 1024 | 1084 | 1144 | 1204 | 2039 | 3039 | 4039 |
| 6.8 | B | 10 | T222B685K020(1)S | 2.0 | 3 | 0024 | 0084 | 0144 | 0204 | 2040 | 3040 | 4040 |
| **35 VOLT RATING AT 85°C — 23 VOLT RATING AT 125°C** | | | | | | | | | | | | |
| 0.33 | A | 5 | T222A334J035(1)S | 0.6 | 3 | 1025 | 1085 | 1145 | 1205 | 2041 | 3041 | 4041 |
| 0.33 | A | 10 | T222A334K035(1)S | 0.6 | 3 | 0025 | 0085 | 0145 | 0205 | 2042 | 3042 | 4042 |
| 0.39 | A | 5 | T222A394J035(1)S | 0.6 | 3 | 1026 | 1086 | 1146 | 1206 | 2043 | 3043 | 4043 |
| 0.39 | A | 10 | T222A394K035(1)S | 0.6 | 3 | 0026 | 0086 | 0146 | 0206 | 2044 | 3044 | 4044 |
| 0.47 | A | 5 | T222A474J035(1)S | 0.6 | 3 | 1027 | 1087 | 1147 | 1207 | 2045 | 3045 | 4045 |
| **0.47** | **A** | **10** | **T222A474K035(1)S** | **0.6** | **3** | **0027** | **0087** | **0147** | **0207** | **2046** | **3046** | **4046** |
| 2.2 | B | 5 | T222B225J035(1)S | 1.4 | 3 | 1028 | 1088 | 1148 | 1208 | 2047 | 3047 | 4047 |
| **2.2** | **B** | **10** | **T222B225K035(1)S** | **1.4** | **3** | **0028** | **0088** | **0148** | **0208** | **2048** | **3048** | **4048** |
| 2.7 | B | 5 | T222B275J035(1)S | 1.4 | 3 | 1029 | 1089 | 1149 | 1209 | 2049 | 3049 | 4049 |
| 2.7 | B | 10 | T222B275K035(1)S | 1.4 | 3 | 0029 | 0089 | 0149 | 0209 | 2050 | 3050 | 4050 |

(1) To complete Part Number, insert Failure Rate Symbol in the 13th Character as shown on Page 24.
**Bold Face** lines indicate popular part types and values

## RATINGS & PART NUMBER REFERENCE

| CAPACITANCE µF | CASE SIZE | CAPACITANCE TOLERANCE ±% | KEMET T222 SERIES: KEMET PART NUMBER | D.C. LEAKAGE µA@25°C MAX. | MAX. DISSIPATION FACTOR %@25°C, 120Hz | MIL-PRF-39003 (CSR09) CAPACITORS — DASH NUMBER REFERENCE FAILURE RATE LEVEL (%/1000 HRS.): MIL-PRF-39003/2D EXPONENTIAL: M (1.0) | P (0.1) | R (0.01) | S (0.001) | MIL-PRF-39003/2D GRADED: B (0.1) | C (0.01) | D (0.001) |
|---|---|---|---|---|---|---|---|---|---|---|---|---|
| **50 VOLT RATING AT 85°C — 33 VOLT RATING AT 125°C** | | | | | | | | | | | | |
| 0.22 | A | 5 | T222A224J050(1)S | 0.6 | 3 | 1030 | 1090 | 1150 | 1210 | 2051 | 3051 | 4051 |
| 0.22 | A | 10 | T222A224K050(1)S | 0.6 | 3 | 0030 | 0090 | 0150 | 0210 | 2052 | 3052 | 4052 |
| 0.27 | A | 5 | T222A274J050(1)S | 0.6 | 3 | 1031 | 1091 | 1151 | 1211 | 2053 | 3053 | 4053 |
| **0.27** | **A** | **10** | **T222A274K050(1)S** | **0.6** | **3** | **0031** | **0091** | **0151** | **0211** | **2054** | **3054** | **4054** |
| 1.5 | B | 5 | T222B155J050(1)S | 1.4 | 3 | 1032 | 1092 | 1152 | 1212 | 2055 | 3055 | 4055 |
| 1.5 | B | 10 | T222B155K050(1)S | 1.4 | 3 | 0032 | 0092 | 0152 | 0212 | 2056 | 3056 | 4056 |
| 1.8 | B | 5 | T222B185J050(1)S | 1.4 | 3 | 1033 | 1093 | 1153 | 1213 | 2057 | 3057 | 4057 |
| **1.8** | **B** | **10** | **T222B185K050(1)S** | **1.4** | **3** | **0033** | **0093** | **0153** | **0213** | **2058** | **3058** | **4058** |
| **75 VOLT RATING AT 85°C — 50 VOLT RATING AT 125°C** | | | | | | | | | | | | |
| 0.047 | A | 5 | T222A473J075(1)S | 0.6 | 3 | 1034 | 1094 | 1154 | 1214 | 2059 | 3059 | 4059 |
| 0.047 | A | 10 | T222A473K075(1)S | 0.6 | 3 | 0034 | 0094 | 0154 | 0214 | 2060 | 3060 | 4060 |
| 0.056 | A | 5 | T222A563J075(1)S | 0.6 | 3 | 1035 | 1095 | 1155 | 1215 | 2061 | 3061 | 4061 |
| 0.056 | A | 10 | T222A563K075(1)S | 0.6 | 3 | 0035 | 0095 | 0155 | 0215 | 2062 | 3062 | 4062 |
| 0.068 | A | 5 | T222A683J075(1)S | 0.6 | 3 | 1036 | 1096 | 1156 | 1216 | 2063 | 3063 | 4063 |
| 0.068 | A | 10 | T222A683K075(1)S | 0.6 | 3 | 0036 | 0096 | 0156 | 0216 | 2064 | 3064 | 4064 |
| 0.082 | A | 5 | T222A823J075(1)S | 0.6 | 3 | 1037 | 1097 | 1157 | 1217 | 2065 | 3065 | 4065 |
| 0.082 | A | 10 | T222A823K075(1)S | 0.6 | 3 | 0037 | 0097 | 0157 | 0217 | 2066 | 3066 | 4066 |
| 0.10 | A | 5 | T222A104J075(1)S | 0.6 | 3 | 1038 | 1098 | 1158 | 1218 | 2067 | 3067 | 4067 |
| **0.10** | **A** | **10** | **T222A104K075(1)S** | **0.6** | **3** | **0038** | **0098** | **0158** | **0218** | **2068** | **3068** | **4068** |
| 0.12 | A | 5 | T222A124J075(1)S | 0.6 | 3 | 1039 | 1099 | 1159 | 1219 | 2069 | 3069 | 4069 |
| 0.12 | A | 10 | T222A124K075(1)S | 0.6 | 3 | 0039 | 0099 | 0159 | 0219 | 2070 | 3070 | 4070 |
| 0.15 | A | 5 | T222A154J075(1)S | 0.6 | 3 | 1040 | 1100 | 1160 | 1220 | 2071 | 3071 | 4071 |
| 0.15 | A | 10 | T222A154K075(1)S | 0.6 | 3 | 0040 | 0100 | 0160 | 0220 | 2072 | 3072 | 4072 |
| 0.18 | A | 5 | T222A184J075(1)S | 0.6 | 3 | 1041 | 1101 | 1161 | 1221 | 2073 | 3073 | 4073 |
| 0.18 | A | 10 | T222A184K075(1)S | 0.6 | 3 | 0041 | 0101 | 0161 | 0221 | 2074 | 3074 | 4074 |
| 0.22 | B | 5 | T222B224J075(1)S | 0.6 | 3 | 1042 | 1102 | 1162 | 1222 | 2075 | 3075 | 4075 |
| 0.22 | B | 10 | T222B224K075(1)S | 0.6 | 3 | 0042 | 0102 | 0162 | 0222 | 2076 | 3076 | 4076 |
| 0.27 | B | 5 | T222B274J075(1)S | 0.6 | 3 | 1043 | 1103 | 1163 | 1223 | 2077 | 3077 | 4077 |
| 0.27 | B | 10 | T222B274K075(1)S | 0.6 | 3 | 0043 | 0103 | 0163 | 0223 | 2078 | 3078 | 4078 |
| 0.33 | B | 5 | T222B334J075(1)S | 0.6 | 3 | 1044 | 1104 | 1164 | 1224 | 2079 | 3079 | 4079 |
| 0.33 | B | 10 | T222B334K075(1)S | 0.6 | 3 | 0044 | 0104 | 0164 | 0224 | 2080 | 3080 | 4080 |
| 0.39 | B | 5 | T222B394J075(1)S | 0.6 | 3 | 1045 | 1105 | 1165 | 1225 | 2081 | 3081 | 4081 |
| 0.39 | B | 10 | T222B394K075(1)S | 0.6 | 3 | 0045 | 0105 | 0165 | 0225 | 2082 | 3082 | 4082 |
| 0.47 | B | 5 | T222B474J075(1)S | 0.6 | 3 | 1046 | 1106 | 1166 | 1226 | 2083 | 3083 | 4083 |
| 0.47 | B | 10 | T222B474K075(1)S | 0.6 | 3 | 0046 | 0106 | 0166 | 0226 | 2084 | 3084 | 4084 |
| 0.56 | B | 5 | T222B564J075(1)S | 0.6 | 3 | 1047 | 1107 | 1167 | 1227 | 2085 | 3085 | 4085 |
| 0.56 | B | 10 | T222B564K075(1)S | 0.6 | 3 | 0047 | 0107 | 0167 | 0227 | 2086 | 3086 | 4086 |
| 0.68 | B | 5 | T222B684J075(1)S | 0.6 | 3 | 1048 | 1108 | 1168 | 1228 | 2087 | 3087 | 4087 |
| 0.68 | B | 10 | T222B684K075(1)S | 0.6 | 3 | 0048 | 0108 | 0168 | 0228 | 2088 | 3088 | 4088 |
| 0.82 | B | 5 | T222B824J075(1)S | 0.7 | 3 | 1049 | 1109 | 1169 | 1229 | 2089 | 3089 | 4089 |
| 0.82 | B | 10 | T222B824K075(1)S | 0.7 | 3 | 0049 | 0109 | 0169 | 0229 | 2090 | 3090 | 4090 |
| 1.0 | B | 5 | T222B105J075(1)S | 0.9 | 3 | 1050 | 1110 | 1170 | 1230 | 2091 | 3091 | 4091 |
| 1.0 | B | 10 | T222B105K075(1)S | 0.9 | 3 | 0050 | 0110 | 0170 | 0230 | 2092 | 3092 | 4092 |
| 1.2 | B | 5 | T222B125J075(1)S | 0.9 | 3 | 1051 | 1111 | 1171 | 1231 | 2093 | 3093 | 4093 |
| 1.2 | B | 10 | T222B125K075(1)S | 0.9 | 3 | 0051 | 0111 | 0171 | 0231 | 2094 | 3094 | 4094 |

(1) To complete Part Number, insert Failure Rate Symbol in the 13th Character as shown on Page 24.
**Bold Face** lines indicate popular part types and values

# TANTALUM HERMETICALLY SEALED / AXIAL — MIL-PRF-39003

## T140 SERIES — POLAR TYPE & T242 (CSR23)

KEMET standard MIL case hermetically sealed T140 Series (Extended Capacitance Range) are compact, ruggedly built, designed for miniturized circuitry, and are especially suited for coupling, bypass, filtering and R-C timing circuits. They exhibit excellent stability, low DC leakage current, dissipation factor, and ESR/impedance over a wide temperature and frequency range.

Available in standard EIA capacitance values from .82-1200 µF in ±20%, ±10%, and ±5% tolerances and working voltages from 6-60 VDC.

Included in the following Series table is a complete listing of CSR23 qualified MIL-C-39003/3 capacitors.

## DIMENSIONS — INCHES & (MILLIMETERS)

| CASE SIZE | UNINSULATED D ±0.005 ±(.13) | UNINSULATED L ±0.031 ±(.79) | INSULATED D ±0.010 ±(.25) | INSULATED L ±0.031 ±(.79) | B ±0.002 ±(.05) | C MAX. |
|---|---|---|---|---|---|---|
| A | 0.125 (3.18) | 0.250 (6.35) | 0.135 (3.43) | 0.286 (7.26) | 0.020 (.51) | 0.422 (10.72) |
| B | 0.175 (4.45) | 0.438 (11.13) | 0.185 (4.70) | 0.474 (12.04) | 0.020 (.51) | 0.610 (15.49) |
| C | 0.279 (7.09) | 0.650 (16.51) | 0.289 (7.34) | 0.686 (17.42) | 0.025 (.64) | 0.822 (20.88) |
| D | 0.341 (8.66) | 0.750 (19.05) | 0.351 (8.92) | 0.786 (19.96) | 0.025 (.64) | 0.922 (23.42) |

## MARKING INFORMATION*

### A, B, C & D CASES

| | |
|---|---|
| +K 10% | Polarity, Manufacturer's Identification and Capacitance Tol. |
| 5R6 µF | Normal Capacitance — (µF) ("R" indicates decimal) |
| 10V | Voltage |
| 0312 | Date Code (e.g.: 0312) |

*** For Military Marking, see page 4.**

## CAPACITOR OUTLINE DRAWINGS

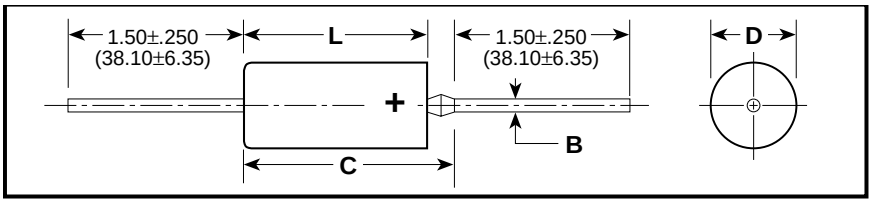


Effective September 30, 2005, the KEMET T140 Series is RoHS compliant by ordering the "T" (100% tin) end termination in the 14th position of the part number.

## RATINGS & PART NUMBER REFERENCE

| CAPACITANCE µF | CASE SIZE | CAPACITANCE TOLERANCE ±% | KEMET T140 PART NUMBER | D.C. LEAKAGE µA@25°C MAX. | MAX. DISSIPATION FACTOR %@25°C, 120Hz | MIL-PRF-39003 (CSR23) CAPACITORS — DASH NUMBER REFERENCE FAILURE RATE LEVEL (%/1000 HRS.) — MIL-PRF-39003/3F EXPONENTIAL: M (1.0) | P (0.1) | R (0.01) | S (0.001) | MIL-PRF-39003/3F GRADED: B (0.1) | C (0.01) | D (0.001) | KEMET EQUIVALENT MILITARY PART NUMBER |
|---|---|---|---|---|---|---|---|---|---|---|---|---|---|
| **6 VOLT RATING AT 85°C — 4 VOLT RATING AT 125°C** | | | | | | | | | | | | | |
| 8.2 | A | 10, 20 | T140A825(1)006AS | 0.9 | 6 | | | | | | | | |
| **10.0** | **A** | **10** | **T140A106K006AS** | **0.9** | **6** | **0101** | **0201** | **0301** | **0401** | **2001** | **3001** | **4001** | **T242A106K006(2)S** |
| **10.0** | **A** | **20** | **T140A106M006AS** | **0.9** | **6** | **0102** | **0202** | **0302** | **0402** | **2002** | **3002** | **4002** | **T242A106M006(2)S** |
| 12.0 | A | 10 | T140A126K006AS | 1.0 | 6 | 0103 | 0203 | 0303 | 0403 | 2003 | 3003 | 4003 | T242A126K006(2)S |
| 12.0 | A | 20 | T140A126M006AS | 1.0 | 6 | | | | | | | | |
| 68.0 | B | 10, 20 | T140B686(1)006AS | 3.0 | 6 | | | | | | | | |
| 82.0 | B | 10, 20 | T140B826(1)006AS | 3.0 | 6 | | | | | | | | |
| **100.0** | **B** | **10** | **T140B107K006AS** | **6.0** | **6** | **0104** | **0204** | **0304** | **0404** | **2004** | **3004** | **4004** | **T242B107K006(2)S** |
| **100.0** | **B** | **20** | **T140B107M006AS** | **6.0** | **6** | **0105** | **0205** | **0305** | **0405** | **2005** | **3005** | **4005** | **T242B107M006(2)S** |
| 220.0 | C | 10, 20 | T140C227(1)006AS | 10.0 | 8 | | | | | | | | |
| 270.0 | C | 10, 20 | T140C277(1)006AS | 10.0 | 8 | | | | | | | | |
| 330.0 | C | 10 | T140C337K006AS | 10.0 | 8 | 0106 | 0206 | 0306 | 0406 | 2006 | 3006 | 4006 | T242C337K006(2)S |
| 330.0 | C | 20 | T140C337M006AS | 10.0 | 8 | 0107 | 0207 | 0307 | 0407 | 2007 | 3007 | 4007 | T242C337M006(2)S |
| 390.0 | C | 10 | T140C397K006AS | 10.0 | 10 | 0108 | 0208 | 0308 | 0408 | 2008 | 3008 | 4008 | T242C397K006(2)S |
| 390.0 | C | 20 | T140C397M006AS | 10.0 | 10 | | | | | | | | |
| **470.0** | **C** | **10** | **T140C477K006AS** | **10.0** | **10** | **0109** | **0209** | **0309** | **0409** | **2009** | **3009** | **4009** | **T242C477K006(2)S** |
| **470.0** | **C** | **20** | **T140C477M006AS** | **10.0** | **10** | **0110** | **0210** | **0310** | **0410** | **2010** | **3010** | **4010** | **T242C477M006(2)S** |
| 560.0 | D | 10, 20 | T140D567(1)006AS | 20.0 | 10 | | | | | | | | |
| 680.0 | D | 10 | T140D687K006AS | 20.0 | 10 | 0111 | 0211 | 0311 | 0411 | 2011 | 3011 | 4011 | T242D687K006(2)S |
| 680.0 | D | 20 | T140D687M006AS | 20.0 | 10 | 0112 | 0212 | 0312 | 0412 | 2012 | 3012 | 4012 | T242D687M006(2)S |
| 820.0 | D | 10 | T140D827K006AS | 20.0 | 10 | 0113 | 0213 | 0313 | 0413 | 2013 | 3013 | 4013 | T242D827K006(2)S |
| 820.0 | D | 20 | T140D827M006AS | 20.0 | 10 | | | | | | | | |
| **1000.0** | **D** | **10** | **T140D108K006AS** | **20.0** | **10** | **0114** | **0214** | **0314** | **0414** | **2014** | **3014** | **4014** | **T242D108K006(2)S** |
| **1000.0** | **D** | **20** | **T140D108M006AS** | **20.0** | **10** | **0115** | **0215** | **0315** | **0415** | **2015** | **3015** | **4015** | **T242D108M006(2)S** |
| 1200.0 | D | 20 | T140D128M006AS | 20.0 | 10 | | | | | | | | |

(1) To complete T140 Series Part Number, insert Capacitance Tolerance Symbol in the 9th Character as shown on Page 6.
(2) To complete the T242 Series Part Number, insert Failure Rate Symbol in the 13th Character.
**Bold Face** lines indicate popular part types and values.
For ordering information, see page 4 (Military) and Page 6.

## RATINGS & PART NUMBER REFERENCE

| CAPACITANCE µF | CASE SIZE | CAPACITANCE TOLERANCE ±% | KEMET T140 PART NUMBER | D.C. LEAKAGE µA@25°C MAX. | MAX. DISSIPATION FACTOR %@25°C, 120Hz | MIL-PRF-39003 (CSR23) CAPACITORS — DASH NUMBER REFERENCE FAILURE RATE LEVEL (%/1000 HRS.) — MIL-PRF-39003/3F EXPONENTIAL: M (1.0) | P (0.1) | R (0.01) | S (0.001) | MIL-PRF-39003/3F GRADED: B (0.1) | C (0.01) | D (0.001) | KEMET EQUIVALENT MILITARY PART NUMBER |
|---|---|---|---|---|---|---|---|---|---|---|---|---|---|
| **10 VOLT RATING AT 85°C — 7 VOLT RATING AT 125°C** | | | | | | | | | | | | | |
| 5.6 | A | 10, 20 | T140A565(1)010AS | 1.0 | 4 | | | | | | | | |
| 6.8 | A | 10 | T140A685K010AS | 1.0 | 6 | 0116 | 0216 | 0316 | 0416 | 2016 | 3016 | 4016 | T242A685K010(2)S |
| 6.8 | A | 20 | T140A685M010AS | 1.0 | 6 | 0117 | 0217 | 0317 | 0417 | 2017 | 3017 | 4017 | T242A685M010(2)S |
| **8.2** | **A** | **10** | **T140A825K010AS** | **1.2** | **6** | **0118** | **0218** | **0318** | **0418** | **2018** | **3018** | **4018** | **T242A825K010(2)S** |
| **8.2** | **A** | **20** | **T140A825M010AS** | **1.2** | **6** | | | | | | | | |
| 47.0 | B | 10 | T140B476K010AS | 4.0 | 6 | 0119 | 0219 | 0319 | 0419 | 2019 | 3019 | 4019 | T242B476K010(2)S |
| 47.0 | B | 20 | T140B476M010AS | 4.0 | 6 | 0120 | 0220 | 0320 | 0420 | 2020 | 3020 | 4020 | T242B476M010(2)S |
| 56.0 | B | 10 | T140B566K010AS | 5.0 | 6 | 0121 | 0221 | 0321 | 0421 | 2021 | 3021 | 4021 | T242B566K010(2)S |
| 56.0 | B | 20 | T140B566M010AS | 5.0 | 6 | | | | | | | | |
| **68.0** | **B** | **10** | **T140B686K010AS** | **6.0** | **6** | **0122** | **0222** | **0322** | **0422** | **2022** | **3022** | **4022** | **T242B686K010(2)S** |
| **68.0** | **B** | **20** | **T140B686M010AS** | **6.0** | **6** | **0123** | **0223** | **0323** | **0423** | **2023** | **3023** | **4023** | **T242B686M010(2)S** |
| **82.0** | **B** | **10** | **T140B826K010AS** | **7.0** | **6** | **0124** | **0224** | **0324** | **0424** | **2024** | **3024** | **4024** | **T242B826K010(2)S** |
| **82.0** | **B** | **20** | **T140B826M010AS** | **7.0** | **6** | | | | | | | | |
| 150.0 | C | 10, 20 | T140C157(1)010AS | 8.0 | 8 | | | | | | | | |
| 180.0 | C | 10, 20 | T140C187(1)010AS | 8.0 | 8 | | | | | | | | |
| **220.0** | **C** | **10** | **T140C227K010AS** | **12.0** | **8** | **0125** | **0225** | **0325** | **0425** | **2025** | **3025** | **4025** | **T242C227K010(2)S** |
| **220.0** | **C** | **20** | **T140C227M010AS** | **12.0** | **8** | **0126** | **0226** | **0326** | **0426** | **2026** | **3026** | **4026** | **T242C227M010(2)S** |
| 270.0 | C | 10 | T140C277K010AS | 13.0 | 8 | 0127 | 0227 | 0327 | 0427 | 2027 | 3027 | 4027 | T242C277K010(2)S |
| 270.0 | C | 20 | T140C277M010AS | 13.0 | 8 | | | | | | | | |
| 330.0 | D | 10, 20 | T140D337(1)010AS | 16.0 | 8 | | | | | | | | |
| 390.0 | D | 10 | T140D397K010AS | 16.0 | 10 | 0128 | 0228 | 0328 | 0428 | 2028 | 3028 | 4028 | T242D397K010(2)S |
| 390.0 | D | 20 | T140D397M010AS | 16.0 | 10 | | | | | | | | |
| 470.0 | D | 10 | T140D477K010AS | 16.0 | 10 | 0129 | 0229 | 0329 | 0429 | 2029 | 3029 | 4029 | T242D477K010(2)S |
| 470.0 | D | 20 | T140D477M010AS | 16.0 | 10 | 0130 | 0230 | 0330 | 0430 | 2030 | 3030 | 4030 | T242D477M010(2)S |
| **560.0** | **D** | **10** | **T140D567K010AS** | **20.0** | **10** | **0131** | **0231** | **0331** | **0431** | **2031** | **3031** | **4031** | **T242D567K010(2)S** |
| **560.0** | **D** | **20** | **T140D567M010AS** | **20.0** | **10** | | | | | | | | |
| **15 VOLT RATING AT 85°C — 10 VOLT RATING AT 125°C** | | | | | | | | | | | | | |
| 3.9 | A | 10, 20 | T140A395(1)015AS | 1.0 | 4 | | | | | | | | |
| 4.7 | A | 10 | T140A475K015AS | 1.0 | 4 | 0132 | 0232 | 0332 | 0432 | 2032 | 3032 | 4032 | T242A475K015(2)S |
| 4.7 | A | 20 | T140A475M015AS | 1.0 | 4 | 0133 | 0233 | 0333 | 0433 | 2033 | 3033 | 4033 | T242A475M015(2)S |
| 5.6 | A | 10 | T140A565K015AS | 1.3 | 4 | 0134 | 0234 | 0334 | 0434 | 2034 | 3034 | 4034 | T242A565K015(2)S |
| 5.6 | A | 20 | T140A565M015AS | 1.3 | 4 | | | | | | | | |
| 27.0 | B | 10, 20 | T140B276(1)015AS | 3.0 | 6 | | | | | | | | |
| 33.0 | B | 10 | T140B336K015AS | 5.0 | 6 | 0135 | 0235 | 0335 | 0435 | 2035 | 3035 | 4035 | T242B336K015(2)S |
| 33.0 | B | 20 | T140B336M015AS | 5.0 | 6 | 0136 | 0236 | 0336 | 0436 | 2036 | 3036 | 4036 | T242B336M015(2)S |
| **39.0** | **B** | **10** | **T140B396K015AS** | **5.3** | **6** | **0137** | **0237** | **0337** | **0437** | **2037** | **3037** | **4037** | **T242B396K015(2)S** |
| **39.0** | **B** | **20** | **T140B396M015AS** | **5.3** | **6** | | | | | | | | |
| 82.0 | C | 10, 20 | T140C826(1)015AS | 8.0 | 6 | | | | | | | | |
| 100.0 | C | 10, 20 | T140C107(1)015AS | 10.0 | 6 | | | | | | | | |
| 120.0 | C | 10, 20 | T140C127(1)015AS | 10.0 | 6 | | | | | | | | |
| 150.0 | C | 10 | T140C157K015AS | 15.0 | 8 | 0138 | 0238 | 0338 | 0438 | 2038 | 3038 | 4038 | T242C157K015(2)S |
| 150.0 | C | 20 | T140C157M015AS | 15.0 | 8 | 0139 | 0239 | 0339 | 0439 | 2039 | 3039 | 4039 | T242C157M015(2)S |
| **180.0** | **C** | **10** | **T140C187K015AS** | **15.0** | **8** | **0140** | **0240** | **0340** | **0440** | **2040** | **3040** | **4040** | **T242C187K015(2)S** |
| **180.0** | **C** | **20** | **T140C187M015AS** | **15.0** | **8** | | | | | | | | |
| 220.0 | D | 10 | T140D227K015AS | 20.0 | 8 | 0141 | 0241 | 0341 | 0441 | 2041 | 3041 | 4041 | T242D227K015(2)S |
| 220.0 | D | 20 | T140D227M015AS | 20.0 | 8 | 0142 | 0242 | 0342 | 0442 | 2042 | 3042 | 4042 | T242D227M015(2)S |
| 270.0 | D | 10 | T140D277K015AS | 20.0 | 8 | 0143 | 0243 | 0343 | 0443 | 2043 | 3043 | 4043 | T242D277K015(2)S |
| 270.0 | D | 20 | T140D277M015AS | 20.0 | 8 | | | | | | | | |
| **330.0** | **D** | **10** | **T140D337K015AS** | **20.0** | **8** | **0144** | **0244** | **0344** | **0444** | **2044** | **3044** | **4044** | **T242D337K015(2)S** |
| **330.0** | **D** | **20** | **T140D337M015AS** | **20.0** | **8** | **0145** | **0245** | **0345** | **0445** | **2045** | **3045** | **4045** | **T242D337M015(2)S** |

(1) To complete T140 Series Part Number, insert Capacitance Tolerance Symbol in the 9th Character as shown on Page 6.
(2) To complete the T242 Series Part Number, insert Failure Rate Symbol in the 13th Character.

## RATINGS & PART NUMBER REFERENCE

| CAPACITANCE µF | CASE SIZE | CAPACITANCE TOLERANCE ±% | KEMET T140 KEMET PART NUMBER | D.C. LEAKAGE µA@25°C MAX. | MAX. DISSIPATION FACTOR %@25°C, 120Hz | MIL-PRF-39003 (CSR23) CAPACITORS — DASH NUMBER REFERENCE FAILURE RATE LEVEL (%/1000 HRS.) — MIL-PRF-39003/3F EXPONENTIAL: M (1.0) | P (0.1) | R (0.01) | S (0.001) | MIL-PRF-39003/3F GRADED: B (0.1) | C (0.01) | D (0.001) | KEMET EQUIVALENT MILITARY PART NUMBER |
|---|---|---|---|---|---|---|---|---|---|---|---|---|---|
| **20 VOLT RATING AT 85°C — 13 VOLT RATING AT 125°C** | | | | | | | | | | | | | |
| 2.7 | A | 10 | T140A275K020AS | 0.8 | 4 | 0146 | 0246 | 0346 | 0446 | 2046 | 3046 | 4046 | T242A275K020(2)S |
| 2.7 | A | 20 | T140A275M020AS | 0.8 | 4 | | | | | | | | |
| 3.3 | A | 10 | T140A335K020AS | 1.0 | 4 | 0147 | 0247 | 0347 | 0447 | 2047 | 3047 | 4047 | T242A335K020(2)S |
| 3.3 | A | 20 | T140A335M020AS | 1.0 | 4 | 0148 | 0248 | 0348 | 0448 | 2048 | 3048 | 4048 | T242A335M020(2)S |
| 3.9 | A | 10 | T140A395K020AS | 1.2 | 4 | 0149 | 0249 | 0349 | 0449 | 2049 | 3049 | 4049 | T242A395K020(2)S |
| 3.9 | A | 20 | T140A395M020AS | 1.2 | 4 | | | | | | | | |
| 18.0 | B | 10 | T140B186K020AS | 3.0 | 6 | 0150 | 0250 | 0350 | 0450 | 2050 | 3050 | 4050 | T242B186K020(2)S |
| 18.0 | B | 20 | T140B186M020AS | 3.0 | 6 | | | | | | | | |
| **22.0** | **B** | **10** | **T140B226K020AS** | **3.0** | **6** | **0151** | **0251** | **0351** | **0451** | **2051** | **3051** | **4051** | **T242B226K020(2)S** |
| **22.0** | **B** | **20** | **T140B226M020AS** | **3.0** | **6** | **0152** | **0252** | **0352** | **0452** | **2052** | **3052** | **4052** | **T242B226M020(2)S** |
| **27.0** | **B** | **10** | **T140B276K020AS** | **4.0** | **6** | **0153** | **0253** | **0353** | **0453** | **2053** | **3053** | **4053** | **T242B276K020(2)S** |
| **27.0** | **B** | **20** | **T140B276M020AS** | **4.0** | **6** | | | | | | | | |
| 56.0 | C | 10 | T140C566K020AS | 7.0 | 6 | 0154 | 0254 | 0354 | 0454 | 2054 | 3054 | 4054 | T242C566K020(2)S |
| 56.0 | C | 20 | T140C566M020AS | 7.0 | 6 | | | | | | | | |
| 68.0 | C | 10 | T140C686K020AS | 8.0 | 6 | 0155 | 0255 | 0355 | 0455 | 2055 | 3055 | 4055 | T242C686K020(2)S |
| 68.0 | C | 20 | T140C686M020AS | 8.0 | 6 | 0156 | 0256 | 0356 | 0456 | 2056 | 3056 | 4056 | T242C686M020(2)S |
| 82.0 | C | 10 | T140C826K020AS | 10.0 | 6 | 0157 | 0257 | 0357 | 0457 | 2057 | 3057 | 4057 | T242C826K020(2)S |
| 82.0 | C | 20 | T140C826M020AS | 10.0 | 6 | | | | | | | | |
| **100.0** | **C** | **10** | **T140C107K020AS** | **12.0** | **6** | **0158** | **0258** | **0358** | **0458** | **2058** | **3058** | **4058** | **T242C107K020(2)S** |
| **100.0** | **C** | **20** | **T140C107M020AS** | **12.0** | **6** | **0159** | **0259** | **0359** | **0459** | **2059** | **3059** | **4059** | **T242C107M020(2)S** |
| 120.0 | C | 10 | T140C127K020AS | 12.0 | 6 | 0160 | 0260 | 0360 | 0460 | 2060 | 3060 | 4060 | T242C127K020(2)S |
| 120.0 | C | 20 | T140C127M020AS | 12.0 | 6 | | | | | | | | |
| 150.0 | D | 10 | T140D157K020AS | 15.0 | 8 | 0161 | 0261 | 0361 | 0461 | 2061 | 3061 | 4061 | T242D157K020(2)S |
| 150.0 | D | 20 | T140D157M020AS | 15.0 | 8 | 0162 | 0262 | 0362 | 0462 | 2062 | 3062 | 4062 | T242D157M020(2)S |
| **180.0** | **D** | **10** | **T140D187K020AS** | **15.0** | **8** | **0163** | **0263** | **0363** | **0463** | **2063** | **3063** | **4063** | **T242D187K020(2)S** |
| **180.0** | **D** | **20** | **T140D187M020AS** | **15.0** | **8** | | | | | | | | |
| **30 VOLT RATING AT 85°C — 20 VOLT RATING AT 125°C** | | | | | | | | | | | | | |
| 1.2 | A | 10, 20 | T140A125(1)030AS | 1.0 | 4 | | | | | | | | |
| 1.5 | A | 10, 20 | T140A155(1)030AS | 1.0 | 4 | | | | | | | | |
| 1.8 | A | 10, 20 | T140A185(1)030AS | 1.0 | 4 | | | | | | | | |
| **2.2** | **A** | **10, 20** | **T140A225(1)030AS** | **1.0** | **4** | | | | | | | | |
| **2.7** | **A** | **10, 20** | **T140A275(1)030AS** | **1.0** | **4** | | | | | | | | |
| 12.0 | B | 10, 20 | T140B126(1)030AS | 3.0 | 4 | | | | | | | | |
| 15.0 | B | 10, 20 | T140B156(1)030AS | 3.0 | 4 | | | | | | | | |
| **18.0** | **B** | **10, 20** | **T140B186(1)030AS** | **3.0** | **4** | | | | | | | | |
| **33.0** | **C** | **10, 20** | **T140C336(1)030AS** | **6.0** | **6** | | | | | | | | |
| **39.0** | **C** | **10, 20** | **T140C396(1)030AS** | **6.0** | **6** | | | | | | | | |
| **47.0** | **C** | **10, 20** | **T140C476(1)030AS** | **7.0** | **6** | | | | | | | | |
| **56.0** | **C** | **10, 20** | **T140C566(1)030AS** | **7.0** | **6** | | | | | | | | |
| **68.0** | **C** | **10, 20** | **T140C686(1)030AS** | **7.0** | **6** | | | | | | | | |
| 82.0 | D | 10, 20 | T140D826(1)030AS | 10.0 | 6 | | | | | | | | |
| **100.0** | **D** | **10, 20** | **T140D107(1)030AS** | **10.0** | **8** | | | | | | | | |

(1) To complete T140 Series Part Number, insert Capacitance Tolerance Symbol in the 9th Character as shown on Page 6.
(2) To complete the T242 Series Part Number, insert Failure Rate Symbol in the 13th Character.
**Bold Face** lines indicate popular part types and values.

## RATINGS & PART NUMBER REFERENCE

| CAPACITANCE µF | CASE SIZE | CAPACITANCE TOLERANCE ±% | KEMET T140 PART NUMBER | D.C. LEAKAGE µA@25°C MAX. | MAX. DISSIPATION FACTOR %@25°C, 120Hz | MIL-PRF-39003 (CSR23) CAPACITORS — DASH NUMBER REFERENCE FAILURE RATE LEVEL (%/1000 HRS.) — MIL-PRF-39003/3F EXPONENTIAL: M (1.0) | P (0.1) | R (0.01) | S (0.001) | MIL-PRF-39003/3F GRADED: B (0.1) | C (0.01) | D (0.001) | KEMET EQUIVALENT MILITARY PART NUMBER |
|---|---|---|---|---|---|---|---|---|---|---|---|---|---|
| **35 VOLT RATING AT 85°C — 23 VOLT RATING AT 125°C** | | | | | | | | | | | | | |
| 1.2 | A | 10, 20 | T140A125(1)035AS | 0.6 | 4 | | | | | | | | |
| 1.5 | A | 10, 20 | T140A155(1)035AS | 0.8 | 4 | | | | | | | | |
| 1.8 | A | 10 | T140A185K035AS | 1.0 | 4 | 0164 | 0264 | 0364 | 0464 | 2064 | 3064 | 4064 | T242A185K035(2)S |
| 1.8 | A | 20 | T140A185M035AS | 1.0 | 4 | | | | | | | | |
| 8.2 | B | 10 | T140B825K035AS | 3.0 | 4 | 0165 | 0265 | 0365 | 0465 | 2065 | 3065 | 4065 | T242B825K035(2)S |
| 8.2 | B | 20 | T140B825M035AS | 3.0 | 4 | | | | | | | | |
| **10.0** | **B** | **10** | **T140B106K035AS** | **3.0** | **4** | **0166** | **0266** | **0366** | **0466** | **2066** | **3066** | **4066** | **T242B106K035(2)S** |
| **10.0** | **B** | **20** | **T140B106M035AS** | **3.0** | **4** | **0167** | **0267** | **0367** | **0467** | **2067** | **3067** | **4067** | **T242B106M035(2)S** |
| 27.0 | C | 10, 20 | T140C276(1)035AS | 7.0 | 6 | | | | | | | | |
| 33.0 | C | 10 | T140C336K035AS | 8.0 | 6 | 0168 | 0268 | 0368 | 0468 | 2068 | 3068 | 4068 | T242C336K035(2)S |
| 33.0 | C | 20 | T140C336M035AS | 8.0 | 6 | 0169 | 0269 | 0369 | 0469 | 2069 | 3069 | 4069 | T242C336M035(2)S |
| 39.0 | C | 10 | T140C396K035AS | 10.0 | 6 | 0170 | 0270 | 0370 | 0470 | 2070 | 3070 | 4070 | T242C396K035(2)S |
| 39.0 | C | 20 | T140C396M035AS | 10.0 | 6 | | | | | | | | |
| **47.0** | **C** | **10** | **T140C476K035AS** | **10.0** | **6** | **0171** | **0271** | **0371** | **0471** | **2071** | **3071** | **4071** | **T242C476K035(2)S** |
| **47.0** | **C** | **20** | **T140C476M035AS** | **10.0** | **6** | **0172** | **0272** | **0372** | **0472** | **2072** | **3072** | **4072** | **T242C476M035(2)S** |
| 56.0 | D | 10 | T140D566K035AS | 12.0 | 6 | 0173 | 0273 | 0373 | 0473 | 2073 | 3073 | 4073 | T242D566K035(2)S |
| 56.0 | D | 20 | T140D566M035AS | 12.0 | 6 | | | | | | | | |
| **68.0** | **D** | **10** | **T140D686K035AS** | **12.0** | **6** | **0174** | **0274** | **0374** | **0474** | **2074** | **3074** | **4074** | **T242D686K035(2)S** |
| **68.0** | **D** | **20** | **T140D686M035AS** | **12.0** | **6** | **0175** | **0275** | **0375** | **0475** | **2075** | **3075** | **4075** | **T242D686M035(2)S** |
| 82.0 | D | 10, 20 | T140D826(1)035AS | 20.0 | 8 | | | | | | | | |
| 100.0 | D | 10, 20 | T140D107(1)035AS | 20.0 | 8 | | | | | | | | |
| **50 VOLT RATING AT 85°C — 33 VOLT RATING AT 125°C** | | | | | | | | | | | | | |
| 1.2 | A | 10 | T140A125K050AS | 0.6 | 4 | 0176 | 0276 | 0376 | 0476 | 2076 | 3076 | 4076 | T242A125K050(2)S |
| 1.2 | A | 20 | T140A125M050AS | 0.6 | 4 | | | | | | | | |
| 1.5 | A | 10 | T140A155K050AS | 0.8 | 4 | 0177 | 0277 | 0377 | 0477 | 2077 | 3077 | 4077 | T242A155K050(2)S |
| 1.5 | A | 20 | T140A155M050AS | 0.8 | 4 | 0178 | 0278 | 0378 | 0478 | 2078 | 3078 | 4078 | T242A155M050(2)S |
| 5.6 | B | 10 | T140B565K050AS | 2.5 | 4 | 0179 | 0279 | 0379 | 0479 | 2079 | 3079 | 4079 | T242B565K050(2)S |
| 5.6 | B | 20 | T140B565M050AS | 2.5 | 4 | | | | | | | | |
| **6.8** | **B** | **10** | **T140B685K050AS** | **2.5** | **4** | **0180** | **0280** | **0380** | **0480** | **2080** | **3080** | **4080** | **T242B685K050(2)S** |
| **6.8** | **B** | **20** | **T140B685M050AS** | **2.5** | **4** | **0181** | **0281** | **0381** | **0481** | **2081** | **3081** | **4081** | **T242B685M050(2)S** |
| **22.0** | **C** | **10** | **T140C226K050AS** | **7.0** | **6** | **0182** | **0282** | **0382** | **0482** | **2082** | **3082** | **4082** | **T242C226K050(2)S** |
| **22.0** | **C** | **20** | **T140C226M050AS** | **7.0** | **6** | **0183** | **0283** | **0383** | **0483** | **2083** | **3083** | **4083** | **T242C226M050(2)S** |
| **27.0** | **C** | **10** | **T140C276K050AS** | **8.0** | **6** | **0184** | **0284** | **0384** | **0484** | **2084** | **3084** | **4084** | **T242C276K050(2)S** |
| **27.0** | **C** | **20** | **T140C276M050AS** | **8.0** | **6** | | | | | | | | |
| 33.0 | D | 10 | T140D336K050AS | 10.0 | 6 | 0185 | 0285 | 0385 | 0485 | 2085 | * | * | T242D336K050(2)S |
| 33.0 | D | 20 | T140D336M050AS | 10.0 | 6 | 0186 | 0286 | 0386 | 0486 | 2086 | * | * | T242D336M050(2)S |
| **39.0** | **D** | **10** | **T140D396K050AS** | **10.0** | **6** | **0187** | **0287** | **0387** | **0487** | **2087** | * | * | **T242D396K050(2)S** |
| **39.0** | **D** | **20** | **T140D396M050AS** | **10.0** | **6** | | | | | | | | |
| 47.0 | D | 20 | T140D476M050AS | 10.0 | 6 | | | | | | | | |
| **60 VOLT RATING AT 85°C — 40 VOLT RATING AT 125°C** | | | | | | | | | | | | | |
| 0.82 | A | 10, 20 | T140A824(1)060AS | 0.5 | 4 | | | | | | | | |
| 1.0 | A | 10, 20 | T140A105(1)060AS | 0.5 | 4 | | | | | | | | |
| 4.7 | B | 10, 20 | T140B475(1)060AS | 3.0 | 4 | | | | | | | | |
| 5.6 | B | 10, 20 | T140B565(1)060AS | 3.0 | 4 | | | | | | | | |
| 15.0 | C | 10, 20 | T140C156(1)060AS | 5.0 | 6 | | | | | | | | |
| 18.0 | C | 10, 20 | T140C186(1)060AS | 6.0 | 6 | | | | | | | | |
| **22.0** | **C** | **10, 20** | **T140C226(1)060AS** | **7.0** | **6** | | | | | | | | |
| 27.0 | D | 10, 20 | T140D276(1)060AS | 10.0 | 6 | | | | | | | | |
| **33.0** | **D** | **10, 20** | **T140D336(1)060AS** | **10.0** | **6** | | | | | | | | |

(1) To complete T140 Series Part Number, insert Capacitance Tolerance Symbol in the 9th Character as shown on Page 6.
(2) To complete the T242 Series Part Number, insert Failure Rate Symbol in the 13th Character.
*Note: C Failure Rate not QPL for -3085 thru 3087
D Failure Rate not QPL for -4085 thru 4087
**Bold Face** lines indicate popular part types and values.

# TANTALUM HERMETICALLY SEALED / AXIAL — MIL-PRF-39003

## T252 (CSR33) SERIES

Available from 1.2 µF to 1000 µF, 6VDC to 50 VDC, these high capacitance-to-volume ratio, hermetically sealed solid tantalum capacitors are offered in standard MIL style A, B, C, and D cases. They meet or exceed the environmental and mechanical requirements of MIL-C-39003. Designed to operate from -55°C to +125°C, they exhibit exceptionally low DC leakage, dissipation factor and impedance characteristics. They are ideal for coupling, bypass, filtering and timing circuits, and are excellent substitutes for wet tantalums in low voltage applications. They are available in style CSR33 (T252 Series) per MIL-PRF-39003/06.

## CAPACITOR OUTLINE DRAWINGS

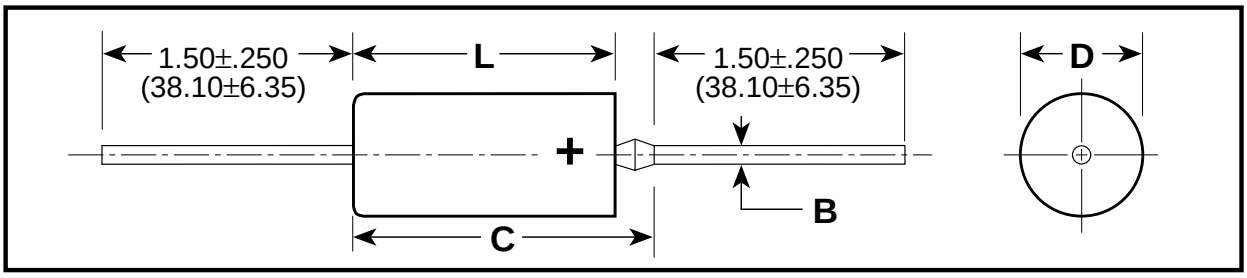


## DIMENSIONS — INCHES & (MILLIMETERS)

| CASE SIZE | UNINSULATED D ±0.005 (±.13) | UNINSULATED L ±0.031 (±.79) | INSULATED D ±0.010 (±.25) | INSULATED L ±0.031 (±.79) | B ±0.002 (±.05) | C MAX. |
|---|---|---|---|---|---|---|
| A | 0.125 (3.18) | 0.250 (6.35) | 0.135 (3.43) | 0.286 (7.26) | 0.020 (.51) | 0.422 (10.72) |
| B | 0.175 (4.45) | 0.438 (11.13) | 0.185 (4.70) | 0.474 (12.04) | 0.020 (.51) | 0.610 (15.49) |
| C | 0.279 (7.09) | 0.650 (16.51) | 0.289 (7.34) | 0.686 (17.42) | 0.025 (.64) | 0.822 (20.88) |
| D | 0.341 (8.66) | 0.750 (19.05) | 0.351 (8.92) | 0.786 (19.96) | 0.025 (.64) | 0.922 (23.42) |

## ORDERING INFORMATION

**T 252 A 125 K 050 M S C***

**TANTALUM** — T

**SERIES**
252 — CSR33

**CASE SIZE**
A / B / C / D

**PICOFARAD CODE**
First two digits represent significant figures.
3rd digit specifies no. of zeros to follow.

**CAP. TOLERANCE**
M — ±20%
K — ±10%
J — ±5%

**VOLTAGE RATING**
At 85°C

**FAILURE RATE****

| GRADED | EXPONENTIAL |
|---|---|
| B — 0.1%/k hrs. | M — 1%/k hrs. |
| C — 0.01%/k hrs. | P — 0.1%/k hrs. |
| D — 0.001%/k hrs. | R — 0.01%/k hrs. |
| | S — 0.001%/k hrs. |

**LEAD MATERIAL**
S — Standard

**SPECIFICATION**
**All capacitors are sleeved unless specified.**

***Part Number Example: T252A125K050MS (14 digits - no spaces)**

**For Military Marking Information, see page 4.**

## RATINGS & PART NUMBER REFERENCE

| CAPACITANCE µF | CASE SIZE | CAPACITANCE TOLERANCE ±% | KEMET T252 SERIES: D.C. LEAKAGE µA@25°C MAX. | MAX. DISSIPATION FACTOR %@25°C, 120Hz | DASH NUMBER REFERENCE FAILURE RATE LEVEL (%/1000 HRS.) MIL-PRF-39003/6C EXPONENTIAL: M (1.0) | P (0.1) | R (0.01) | S (0.001) | MIL-PRF-39003/6C GRADED: B (0.1) | C (0.01) | D (0.001) | MIL-PRF-39003 (CSR33) CAPACITORS: KEMET EQUIVALENT MILITARY PART NUMBER |
|---|---|---|---|---|---|---|---|---|---|---|---|---|
| **6 VOLT RATING AT 85°C** | | | | | | | | | | | | |
| 10.0 | A | 10 | 0.5 | 6 | 0001 | 0101 | 0201 | 0301 | 2001 | 3001 | 4001 | T252A106K006(1)S |
| 10.0 | A | 20 | 0.5 | 6 | 0002 | 0102 | 0202 | 0302 | 2002 | 3002 | 4002 | T252A106M006(1)S |
| 12.0 | A | 10 | 0.5 | 6 | 0003 | 0103 | 0203 | 0303 | 2003 | 3003 | 4003 | T252A126K006(1)S |
| 100.0 | B | 10 | 1.0 | 8 | 0004 | 0104 | 0204 | 0304 | 2004 | 3004 | 4004 | T252B107K006(1)S |
| 100.0 | B | 20 | 1.0 | 8 | 0005 | 0105 | 0205 | 0305 | 2005 | 3005 | 4005 | T252B107M006(1)S |
| 330.0 | C | 10 | 2.0 | 8 | 0006 | 0106 | 0206 | 0306 | 2006 | 3006 | 4006 | T252C337K006(1)S |
| 330.0 | C | 20 | 2.0 | 8 | 0007 | 0107 | 0207 | 0307 | 2007 | 3007 | 4007 | T252C337M006(1)S |
| 390.0 | C | 10 | 2.0 | 10 | 0008 | 0108 | 0208 | 0308 | 2008 | 3008 | 4008 | T252C397K006(1)S |
| 470.0 | C | 10 | 2.0 | 10 | 0009 | 0109 | 0209 | 0309 | 2009 | 3009 | 4009 | T252C477K006(1)S |
| 470.0 | C | 20 | 2.0 | 10 | 0010 | 0110 | 0210 | 0310 | 2010 | 3010 | 4010 | T252C477M006(1)S |
| 680.0 | D | 10 | 5.0 | 10 | 0011 | 0111 | 0211 | 0311 | 2011 | 3011 | 4011 | T252D687K006(1)S |
| 680.0 | D | 20 | 5.0 | 10 | 0012 | 0112 | 0212 | 0312 | 2012 | 3012 | 4012 | T252D687M006(1)S |
| 820.0 | D | 10 | 5.0 | 10 | 0013 | 0113 | 0213 | 0313 | 2013 | 3013 | 4013 | T252D827K006(1)S |
| 1000.0 | D | 10 | 5.0 | 10 | 0014 | 0114 | 0214 | 0314 | 2014 | 3014 | 4014 | T252D108K006(1)S |
| 1000.0 | D | 20 | 5.0 | 10 | 0015 | 0115 | 0215 | 0315 | 2015 | 3015 | 4015 | T252D108M006(1)S |
| **10 VOLT RATING AT 85°C** | | | | | | | | | | | | |
| 6.8 | A | 10 | .5 | 6 | 0016 | 0116 | 0216 | 0316 | 2016 | 3016 | 4016 | T252A685K010(1)S |
| 6.8 | A | 20 | .5 | 6 | 0017 | 0117 | 0217 | 0317 | 2017 | 3017 | 4017 | T252A685M010(1)S |
| 8.2 | A | 10 | .5 | 6 | 0018 | 0118 | 0218 | 0318 | 2018 | 3018 | 4018 | T252A825K010(1)S |
| 47.0 | B | 10 | 1.0 | 6 | 0019 | 0119 | 0219 | 0319 | 2019 | 3019 | 4019 | T252B476K010(1)S |
| 47.0 | B | 20 | 1.0 | 6 | 0020 | 0120 | 0220 | 0320 | 2020 | 3020 | 4020 | T252B476M010(1)S |
| 56.0 | B | 10 | 1.0 | 6 | 0021 | 0121 | 0221 | 0321 | 2021 | 3021 | 4021 | T252B566K010(1)S |
| 68.0 | B | 10 | 1.0 | 6 | 0022 | 0122 | 0222 | 0322 | 2022 | 3022 | 4022 | T252B686K010(1)S |
| 68.0 | B | 20 | 1.0 | 6 | 0023 | 0123 | 0223 | 0323 | 2023 | 3023 | 4023 | T252B686M010(1)S |
| 82.0 | B | 10 | 1.0 | 6 | 0024 | 0124 | 0224 | 0324 | 2024 | 3024 | 4024 | T252B826K010(1)S |
| 220.0 | C | 10 | 1.0 | 8 | 0025 | 0125 | 0225 | 0325 | 2025 | 3025 | 4025 | T252C227K010(1)S |
| 220.0 | C | 20 | 1.0 | 8 | 0026 | 0126 | 0226 | 0326 | 2026 | 3026 | 4026 | T252C227M010(1)S |
| 270.0 | C | 10 | 2.0 | 8 | 0027 | 0127 | 0227 | 0327 | 2027 | 3027 | 4027 | T252C277K010(1)S |
| 390.0 | D | 10 | 2.0 | 10 | 0028 | 0128 | 0228 | 0328 | 2028 | 3028 | 4028 | T252D397K010(1)S |
| 470.0 | D | 10 | 4.0 | 10 | 0029 | 0129 | 0229 | 0329 | 2029 | 3029 | 4029 | T252D477K010(1)S |
| 470.0 | D | 20 | 4.0 | 10 | 0030 | 0130 | 0230 | 0330 | 2030 | 3030 | 4030 | T252D477M010(1)S |
| 560.0 | D | 10 | 4.0 | 10 | 0031 | 0131 | 0231 | 0331 | 2031 | 3031 | 4031 | T252D567K010(1)S |
| **15 VOLT RATING AT 85°C** | | | | | | | | | | | | |
| 4.7 | A | 10 | .5 | 4 | 0032 | 0132 | 0232 | 0332 | 2032 | 3032 | 4032 | T252A475K015(1)S |
| 4.7 | A | 20 | .5 | 4 | 0033 | 0133 | 0233 | 0333 | 2033 | 3033 | 4033 | T252A475M015(1)S |
| 5.6 | A | 10 | .5 | 4 | 0034 | 0134 | 0234 | 0334 | 2034 | 3034 | 4034 | T252A565K015(1)S |
| 33.0 | B | 10 | 1.0 | 6 | 0035 | 0135 | 0235 | 0335 | 2035 | 3035 | 4035 | T252B336K015(1)S |
| 33.0 | B | 20 | 1.0 | 6 | 0036 | 0136 | 0236 | 0336 | 2036 | 3036 | 4036 | T252B336M015(1)S |
| 39.0 | B | 10 | 1.0 | 6 | 0037 | 0137 | 0237 | 0337 | 2037 | 3037 | 4037 | T252B396K015(1)S |
| 150.0 | C | 10 | 1.0 | 8 | 0038 | 0138 | 0238 | 0338 | 2038 | 3038 | 4038 | T252C157K015(1)S |
| 150.0 | C | 20 | 1.0 | 8 | 0039 | 0139 | 0239 | 0339 | 2039 | 3039 | 4039 | T252C157M015(1)S |
| 180.0 | C | 10 | 2.0 | 8 | 0040 | 0140 | 0240 | 0340 | 2040 | 3040 | 4040 | T252C187K015(1)S |
| 220.0 | D | 10 | 2.0 | 8 | 0041 | 0141 | 0241 | 0341 | 2041 | 3041 | 4041 | T252D227K015(1)S |
| 220.0 | D | 20 | 2.0 | 8 | 0042 | 0142 | 0242 | 0342 | 2042 | 3042 | 4042 | T252D227M015(1)S |
| 270.0 | D | 10 | 2.0 | 8 | 0043 | 0143 | 0243 | 0343 | 2043 | 3043 | 4043 | T252D277K015(1)S |
| 330.0 | D | 10 | 2.0 | 8 | 0044 | 0144 | 0244 | 0344 | 2044 | 3044 | 4044 | T252D337K015(1)S |
| 330.0 | D | 20 | 2.0 | 8 | 0045 | 0145 | 0245 | 0345 | 2045 | 3045 | 4045 | T252D337M015(1)S |

(1) To complete Part Number, insert Failure Rate Symbol in the 13th Character as shown on Page 31.

## RATINGS & PART NUMBER REFERENCE

| CAPACITANCE µF | CASE SIZE | CAPACITANCE TOLERANCE ±% | KEMET T252 SERIES | | | | | | MIL-PRF-39003 (CSR33) CAPACITORS | | | |
|---|---|---|---|---|---|---|---|---|---|---|---|---|
| | | | D.C. LEAKAGE µA@25°C MAX. | MAX. DISSI-PATION FACTOR %@25°C, 120Hz | DASH NUMBER REFERENCE FAILURE RATE LEVEL (%/1000 HRS.) MIL-PRF-39003/6C EXPONENTIAL | | | | MIL-PRF-39003/6C GRADED | | | KEMET EQUIVALENT MILITARY PART NUMBER |
| | | | | | M (1.0) | P (0.1) | R (0.01) | S (0.001) | B (0.1) | C (0.01) | D (0.001) | |
| **20 VOLT RATING AT 85°C** | | | | | | | | | | | | |
| 2.7 | A | 10 | .5 | 4 | 0046 | 0146 | 0246 | 0346 | 2046 | 3046 | 4046 | T252A275K020(1)S |
| 3.3 | A | 10 | .5 | 4 | 0047 | 0147 | 0247 | 0347 | 2047 | 3047 | 4047 | T252A335K020(1)S |
| 3.3 | A | 20 | .5 | 4 | 0048 | 0148 | 0248 | 0348 | 2048 | 3048 | 4048 | T252A335M020(1)S |
| 3.9 | A | 10 | .5 | 4 | 0049 | 0149 | 0249 | 0349 | 2049 | 3049 | 4049 | T252A395K020(1)S |
| 18.0 | B | 10 | 1.0 | 6 | 0050 | 0150 | 0250 | 0350 | 2050 | 3050 | 4050 | T252B186K020(1)S |
| 22.0 | B | 10 | 1.0 | 6 | 0051 | 0151 | 0251 | 0351 | 2051 | 3051 | 4051 | T252B226K020(1)S |
| 22.0 | B | 20 | 1.0 | 6 | 0052 | 0152 | 0252 | 0352 | 2052 | 3052 | 4052 | T252B226M020(1)S |
| 27.0 | B | 10 | 1.0 | 6 | 0053 | 0153 | 0253 | 0353 | 2053 | 3053 | 4053 | T252B276K020(1)S |
| 56.0 | C | 10 | 1.0 | 6 | 0054 | 0154 | 0254 | 0354 | 2054 | 3054 | 4054 | T252C566K020(1)S |
| 68.0 | C | 10 | 1.0 | 6 | 0055 | 0155 | 0255 | 0355 | 2055 | 3055 | 4055 | T252C686K020(1)S |
| 68.0 | C | 20 | 1.0 | 6 | 0056 | 0156 | 0256 | 0356 | 2056 | 3056 | 4056 | T252C686M020(1)S |
| 82.0 | C | 10 | 1.0 | 6 | 0057 | 0157 | 0257 | 0357 | 2057 | 3057 | 4057 | T252C826K020(1)S |
| 100.0 | C | 10 | 1.0 | 6 | 0058 | 0158 | 0258 | 0358 | 2058 | 3058 | 4058 | T252C107K020(1)S |
| 100.0 | C | 20 | 1.0 | 6 | 0059 | 0159 | 0259 | 0359 | 2059 | 3059 | 4059 | T252C107M020(1)S |
| 120.0 | C | 10 | 1.0 | 6 | 0060 | 0160 | 0260 | 0360 | 2060 | 3060 | 4060 | T252C127K020(1)S |
| 150.0 | D | 10 | 2.0 | 8 | 0061 | 0161 | 0261 | 0361 | 2061 | 3061 | 4061 | T252D157K020(1)S |
| 150.0 | D | 20 | 2.0 | 8 | 0062 | 0162 | 0262 | 0362 | 2062 | 3062 | 4062 | T252D157M020(1)S |
| 180.0 | D | 10 | 2.0 | 8 | 0063 | 0163 | 0263 | 0363 | 2063 | 3063 | 4063 | T252D187K020(1)S |
| **35 VOLT RATING AT 85°C** | | | | | | | | | | | | |
| 1.8 | A | 10 | .5 | 4 | 0064 | 0164 | 0264 | 0364 | 2064 | 3064 | 4064 | T252A185K035(1)S |
| 8.2 | B | 10 | 1.0 | 6 | 0065 | 0165 | 0265 | 0365 | 2065 | 3065 | 4065 | T252B825K035(1)S |
| 10.0 | B | 10 | 1.0 | 6 | 0066 | 0166 | 0266 | 0366 | 2066 | 3066 | 4066 | T252B106K035(1)S |
| 10.0 | B | 20 | 1.0 | 6 | 0067 | 0167 | 0267 | 0367 | 2067 | 3067 | 4067 | T252B106M035(1)S |
| 33.0 | C | 10 | 1.0 | 6 | 0068 | 0168 | 0268 | 0368 | 2068 | 3068 | 4068 | T252C336K035(1)S |
| 33.0 | C | 20 | 1.0 | 6 | 0069 | 0169 | 0269 | 0369 | 2069 | 3069 | 4069 | T252C336M035(1)S |
| 39.0 | C | 10 | 1.0 | 6 | 0070 | 0170 | 0270 | 0370 | 2070 | 3070 | 4070 | T252C396K035(1)S |
| 47.0 | C | 10 | 1.0 | 6 | 0071 | 0171 | 0271 | 0371 | 2071 | 3071 | 4071 | T252C476K035(1)S |
| 47.0 | C | 20 | 1.0 | 6 | 0072 | 0172 | 0272 | 0372 | 2072 | 3072 | 4072 | T252C476M035(1)S |
| 56.0 | D | 10 | 2.0 | 6 | 0073 | 0173 | 0273 | 0373 | 2073 | 3073 | 4073 | T252D566K035(1)S |
| 68.0 | D | 10 | 2.0 | 6 | 0074 | 0174 | 0274 | 0374 | 2074 | 3074 | 4074 | T252D686K035(1)S |
| 68.0 | D | 20 | 2.0 | 6 | 0075 | 0175 | 0275 | 0375 | 2075 | 3075 | 4075 | T252D686M035(1)S |
| **50 VOLT RATING AT 85°C** | | | | | | | | | | | | |
| 1.2 | A | 10 | .5 | 4 | 0076 | 0176 | 0276 | 0376 | 2076 | 3076 | 4076 | T252A125K050(1)S |
| 1.5 | A | 10 | .5 | 4 | 0077 | 0177 | 0277 | 0377 | 2077 | 3077 | 4077 | T252A155K050(1)S |
| 1.5 | A | 20 | .5 | 4 | 0078 | 0178 | 0278 | 0378 | 2078 | 3078 | 4078 | T252A155M050(1)S |
| 5.6 | B | 10 | 1.0 | 4 | 0079 | 0179 | 0279 | 0379 | 2079 | 3079 | 4079 | T252B565K050(1)S |
| 6.8 | B | 10 | 1.0 | 6 | 0080 | 0180 | 0280 | 0380 | 2080 | 3080 | 4080 | T252B685K050(1)S |
| 6.8 | B | 20 | 1.0 | 6 | 0081 | 0181 | 0281 | 0381 | 2081 | 3081 | 4081 | T252B685M050(1)S |
| 22.0 | C | 10 | 1.0 | 6 | 0082 | 0182 | 0282 | 0382 | 2082 | 3082 | 4082 | T252C226K050(1)S |
| 22.0 | C | 20 | 1.0 | 6 | 0083 | 0183 | 0283 | 0383 | 2083 | 3083 | 4083 | T252C226M050(1)S |
| 27.0 | C | 10 | 1.0 | 6 | 0084 | 0184 | 0284 | 0384 | 2084 | 3084 | 4084 | T252C276K050(1)S |
| 33.0 | D | 10 | 1.0 | 6 | 0085 | 0185 | 0285 | 0385 | 2085 | * | * | T252D336K050(1)S |
| 33.0 | D | 20 | 1.0 | 6 | 0086 | 0186 | 0286 | 0386 | 2086 | * | * | T252D336M050(1)S |
| 39.0 | D | 10 | 1.0 | 6 | 0087 | 0187 | 0287 | 0387 | 2087 | * | * | T252D396K050(1)S |

(1) To complete Part Number, insert Failure Rate Symbol in the 13th Character as shown on Page 31.
*NOTE: C Failure rate not QPL for -3085 thru 3087.
D Failure rate not QPL for -4085 thru 4087.

# TANTALUM HERMETICALLY SEALED / AXIAL — MIL-PRF-39003

## T262 (CSR21) SERIES

KEMET's T262 (CSR21) per MIL-C-39003/09 hermetically sealed solid tantalum capacitors are similar to KEMET's popular T212 (CSR13 per MIL-PRF-39003/01) capacitors shown on page 6, but offer higher ripple current handling capability and exhibit exceptionally low Equivalent Series Resistance (ESR).

The T262 Series is ideal for filtering applications and in military power supplies where low ESR is essential. T262s are 100% surge current tested and their dissipation factor is screened at 1kHz. Available in C & D case sizes only, 5.6 to 330 µF, 6 to 50 VDC.

## CAPACITOR OUTLINE DRAWINGS

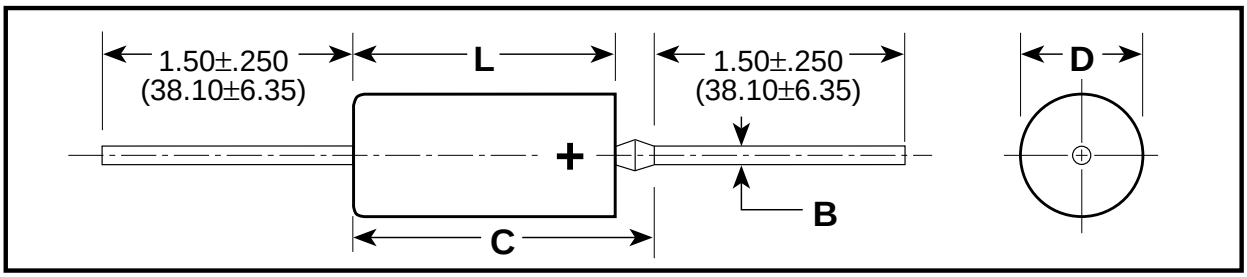


## DIMENSIONS — INCHES & (MILLIMETERS)

| CASE SIZE | UNINSULATED D ±0.005 (±.13) | UNINSULATED L ±0.031 (±.79) | INSULATED D ±0.010 (±.25) | INSULATED L ±0.031 (±.79) | B ±0.002 (±.05) | C MAX. |
|---|---|---|---|---|---|---|
| C | 0.279 (7.09) | 0.650 (16.51) | 0.289 (7.34) | 0.686 (17.42) | 0.025 (.64) | 0.822 (20.88) |
| D | 0.341 (8.66) | 0.750 (19.05) | 0.351 (8.92) | 0.786 (19.96) | 0.025 (.64) | 0.922 (23.42) |

## ORDERING INFORMATION

**T 262 C 106 K 050 C S***

**TANTALUM**

**SERIES**
T262 — (CSR21)

**CASE SIZE**
C / D

**PICOFARAD CODE**
First two digits represent significant figures.
3rd digit specifies no. of zeros to follow.

**CAP. TOLERANCE**
M — ±20%
K — ±10%
J — ±5%

**LEAD MATERIAL**
S — Standard (Solder-coated nickel)

**FAILURE RATE**

| GRADED | EXPONENTIAL |
|---|---|
| B — 0.1%/k hrs. | M — 1%/k hrs. |
| C — 0.01%/k hrs. | P — 0.1%/k hrs. |
| D — 0.001%/k hrs. | R — 0.01%/k hrs. |
| | S — 0.001%/k hrs. |

**VOLTAGE RATING**
At 85°C

***Part Number Example: T262C106K050CS (14 digits – no spaces)**

**For Military Marking Information, see page 4.**



**KEMET Electronics Corporation, P.O. Box 5928, Greenville, S.C. 29606 (864) 963-6300**

## RATINGS & PART NUMBER REFERENCE

| CAPACITANCE µF | CASE SIZE | CAPACITANCE TOLERANCE ±% | KEMET T262 SERIES: D.C. LEAKAGE µA@25°C MAX. | MAX. DISSIPATION FACTOR %@25°C, 1 kHz | MAX. ESR Ω@25°C, 100 kHz | MAX. RIPPLE CURRENT Arms@25°C 40 kHz | MIL-PRF-39003/09 (CSR21) CAPACITORS — DASH NUMBER REFERENCE FAILURE RATE LEVEL (%/1000 HRS.): MIL-PRF-39003/9D EXPONENTIAL: M (1.0) | P (0.1) | R (0.01) | S (0.001) | MIL-PRF-39003/9D GRADED: B (0.1) | C (0.01) | D (0.001) | KEMET EQUIVALENT MILITARY PART NUMBER |
|---|---|---|---|---|---|---|---|---|---|---|---|---|---|---|
| **6 VOLT RATING AT 85°C — 4 VOLT RATING AT 125°C** | | | | | | | | | | | | | | |
| 150.0 | C | 5 | 4.5 | 10 | .065 | 3.3 | 0001 | 0101 | 0201 | 0301 | 2001 | 3001 | 4001 | T262C157J006(1)S |
| 150.0 | C | 10 | 4.5 | 10 | .065 | 3.3 | 0002 | 0102 | 0202 | 0302 | 2002 | 3002 | 4002 | T262C157K006(1)S |
| 150.0 | C | 20 | 4.5 | 10 | .065 | 3.3 | 0003 | 0103 | 0203 | 0303 | 2003 | 3003 | 4003 | T262C157M006(1)S |
| 180.0 | C | 5 | 5.5 | 10 | .060 | 3.4 | 0004 | 0104 | 0204 | 0304 | 2004 | 3004 | 4004 | T262C187J006(1)S |
| 180.0 | C | 10 | 5.5 | 10 | .060 | 3.4 | 0005 | 0105 | 0205 | 0305 | 2005 | 3005 | 4005 | T262C187K006(1)S |
| 270.0 | D | 5 | 6.5 | 10 | .050 | 4.1 | 0006 | 0106 | 0206 | 0306 | 2006 | 3006 | 4006 | T262D277J006(1)S |
| 270.0 | D | 10 | 6.5 | 10 | .050 | 4.1 | 0007 | 0107 | 0207 | 0307 | 2007 | 3007 | 4007 | T262D277K006(1)S |
| 330.0 | D | 5 | 7.5 | 12 | .045 | 4.3 | 0008 | 0108 | 0208 | 0308 | 2008 | 3008 | 4008 | T262D337J006(1)S |
| 330.0 | D | 10 | 7.5 | 12 | .045 | 4.3 | 0009 | 0109 | 0209 | 0309 | 2009 | 3009 | 4009 | T262D337K006(1)S |
| 330.0 | D | 20 | 7.5 | 12 | .045 | 4.3 | 0010 | 0110 | 0210 | 0310 | 2010 | 3010 | 4010 | T262D337M006(1)S |
| **10 VOLT RATING AT 85°C — 7 VOLT RATING AT 125°C** | | | | | | | | | | | | | | |
| 82.0 | C | 5 | 4.0 | 8 | .085 | 2.9 | 0011 | 0111 | 0211 | 0311 | 2011 | 3011 | 4011 | T262C826J010(1)S |
| 82.0 | C | 10 | 4.0 | 8 | .085 | 2.9 | 0012 | 0112 | 0212 | 0312 | 2012 | 3012 | 4012 | T262C826K010(1)S |
| 100.0 | C | 5 | 5.0 | 8 | .075 | 3.0 | 0013 | 0113 | 0213 | 0313 | 2013 | 3013 | 4013 | T262C107J010(1)S |
| 100.0 | C | 10 | 5.0 | 8 | .075 | 3.0 | 0014 | 0114 | 0214 | 0314 | 2014 | 3014 | 4014 | T262C107K010(1)S |
| 100.0 | C | 20 | 5.0 | 8 | .075 | 3.0 | 0015 | 0115 | 0215 | 0315 | 2015 | 3015 | 4015 | T262C107M010(1)S |
| 120.0 | C | 5 | 6.0 | 8 | .070 | 3.2 | 0016 | 0116 | 0216 | 0316 | 2016 | 3016 | 4016 | T262C127J010(1)S |
| 120.0 | C | 10 | 6.0 | 8 | .070 | 3.2 | 0017 | 0117 | 0217 | 0317 | 2017 | 3017 | 4017 | T262C127K010(1)S |
| 180.0 | D | 5 | 9.0 | 8 | .060 | 3.7 | 0018 | 0118 | 0218 | 0318 | 2018 | 3018 | 4018 | T262D187J010(1)S |
| 180.0 | D | 10 | 9.0 | 8 | .060 | 3.7 | 0019 | 0119 | 0219 | 0319 | 2019 | 3019 | 4019 | T262D187K010(1)S |
| 220.0 | D | 5 | 10.0 | 10 | .055 | 3.9 | 0020 | 0120 | 0220 | 0320 | 2020 | 3020 | 4020 | T262D227J010(1)S |
| 220.0 | D | 10 | 10.0 | 10 | .055 | 3.9 | 0021 | 0121 | 0221 | 0321 | 2021 | 3021 | 4021 | T262D227K010(1)S |
| 220.0 | D | 20 | 10.0 | 10 | .055 | 3.9 | 0022 | 0122 | 0222 | 0322 | 2022 | 3022 | 4022 | T262D227M010(1)S |
| **15 VOLT RATING AT 85°C — 10 VOLT RATING AT 125°C** | | | | | | | | | | | | | | |
| 56.0 | C | 5 | 4.0 | 6 | .100 | 2.6 | 0023 | 0123 | 0223 | 0323 | 2023 | 3023 | 4023 | T262C566J015(1)S |
| 56.0 | C | 10 | 4.0 | 6 | .100 | 2.6 | 0024 | 0124 | 0224 | 0324 | 2024 | 3024 | 4024 | T262C566K015(1)S |
| 68.0 | C | 5 | 5.0 | 6 | .095 | 2.7 | 0025 | 0125 | 0225 | 0325 | 2025 | 3025 | 4025 | T262C686J015(1)S |
| 68.0 | C | 10 | 5.0 | 6 | .095 | 2.7 | 0026 | 0126 | 0226 | 0326 | 2026 | 3026 | 4026 | T262C686K015(1)S |
| 68.0 | C | 20 | 5.0 | 6 | .095 | 2.7 | 0027 | 0127 | 0227 | 0327 | 2027 | 3027 | 4027 | T262C686M015(1)S |
| 120.0 | D | 5 | 9.0 | 8 | .070 | 3.5 | 0028 | 0128 | 0228 | 0328 | 2028 | 3028 | 4028 | T262D127J015(1)S |
| 120.0 | D | 10 | 9.0 | 8 | .070 | 3.5 | 0029 | 0129 | 0229 | 0329 | 2029 | 3029 | 4029 | T262D127K015(1)S |
| 150.0 | D | 5 | 10.0 | 8 | .065 | 3.6 | 0030 | 0130 | 0230 | 0330 | 2030 | 3030 | 4030 | T262D157J015(1)S |
| 150.0 | D | 10 | 10.0 | 8 | .065 | 3.6 | 0031 | 0131 | 0231 | 0331 | 2031 | 3031 | 4031 | T262D157K015(1)S |
| 150.0 | D | 20 | 10.0 | 8 | .065 | 3.6 | 0032 | 0132 | 0232 | 0332 | 2032 | 3032 | 4032 | T262D157M015(1)S |
| **20 VOLT RATING AT 85°C — 13 VOLT RATING AT 125°C** | | | | | | | | | | | | | | |
| 27.0 | C | 5 | 2.5 | 5 | .145 | 2.2 | 0033 | 0133 | 0233 | 0333 | 2033 | 3033 | 4033 | T262C276J020(1)S |
| 27.0 | C | 10 | 2.5 | 5 | .145 | 2.2 | 0034 | 0134 | 0234 | 0334 | 2034 | 3034 | 4034 | T262C276K020(1)S |
| 33.0 | C | 5 | 3.5 | 5 | .130 | 2.3 | 0035 | 0135 | 0235 | 0335 | 2035 | 3035 | 4035 | T262C336J020(1)S |
| 33.0 | C | 10 | 3.5 | 5 | .130 | 2.3 | 0036 | 0136 | 0236 | 0336 | 2036 | 3036 | 4036 | T262C336K020(1)S |
| 33.0 | C | 20 | 3.5 | 5 | .130 | 2.3 | 0037 | 0137 | 0237 | 0337 | 2037 | 3037 | 4037 | T262C336M020(1)S |
| 39.0 | C | 5 | 4.0 | 5 | .120 | 2.4 | 0038 | 0138 | 0238 | 0338 | 2038 | 3038 | 4038 | T262C396J020(1)S |
| 39.0 | C | 10 | 4.0 | 5 | .120 | 2.4 | 0039 | 0139 | 0239 | 0339 | 2039 | 3039 | 4039 | T262C396K020(1)S |
| 47.0 | C | 5 | 4.5 | 6 | .110 | 2.5 | 0040 | 0140 | 0240 | 0340 | 2040 | 3040 | 4040 | T262C476J020(1)S |
| 47.0 | C | 10 | 4.5 | 6 | .110 | 2.5 | 0041 | 0141 | 0241 | 0341 | 2041 | 3041 | 4041 | T262C476K020(1)S |
| 47.0 | C | 20 | 4.5 | 6 | .110 | 2.5 | 0042 | 0142 | 0242 | 0342 | 2042 | 3042 | 4042 | T262C476M020(1)S |
| 56.0 | D | 5 | 5.5 | 6 | .100 | 2.9 | 0043 | 0143 | 0243 | 0343 | 2043 | 3043 | 4043 | T262D566J020(1)S |
| 56.0 | D | 10 | 5.5 | 6 | .100 | 2.9 | 0044 | 0144 | 0244 | 0344 | 2044 | 3044 | 4044 | T262D566K020(1)S |
| 68.0 | D | 5 | 7.0 | 6 | .095 | 3.0 | 0045 | 0145 | 0245 | 0345 | 2045 | 3045 | 4045 | T262D686J020(1)S |
| 68.0 | D | 10 | 7.0 | 6 | .095 | 3.0 | 0046 | 0146 | 0246 | 0346 | 2046 | 3046 | 4046 | T262D686K020(1)S |
| 68.0 | D | 20 | 7.0 | 6 | .095 | 3.0 | 0047 | 0147 | 0247 | 0347 | 2047 | 3047 | 4047 | T262D686M020(1)S |
| 82.0 | D | 5 | 8.0 | 6 | .085 | 3.1 | 0048 | 0148 | 0248 | 0348 | 2048 | 3048 | 4048 | T262D826J020(1)S |
| 82.0 | D | 10 | 8.0 | 6 | .085 | 3.1 | 0049 | 0149 | 0249 | 0349 | 2049 | 3049 | 4049 | T262D826K020(1)S |
| 100.0 | D | 5 | 10.0 | 8 | .075 | 3.3 | 0050 | 0150 | 0250 | 0350 | 2050 | 3050 | 4050 | T262D107J020(1)S |
| 100.0 | D | 10 | 10.0 | 8 | .075 | 3.3 | 0051 | 0151 | 0251 | 0351 | 2051 | 3051 | 4051 | T262D107K020(1)S |
| 100.0 | D | 20 | 10.0 | 8 | .075 | 3.3 | 0052 | 0152 | 0252 | 0352 | 2052 | 3052 | 4052 | T262D107M020(1)S |

(1) To complete the T262 Series Part Number, insert Failure Rate Symbol in the 13th Character as shown on Page 34.

## RATINGS & PART NUMBER REFERENCE

| CAPACITANCE µF | CASE SIZE | CAPACITANCE TOLERANCE ±% | KEMET T262 SERIES D.C. LEAKAGE µA@25°C MAX. | MAX. DISSI-PATION FACTOR %@25°C, 1 kHz | MAX. ESR Ω@25°C, 100 kHz | MAX. RIPPLE CURRENT Arms@25°C 40 kHz | MIL-PRF-39003/09 (CSR21) CAPACITORS — DASH NUMBER REFERENCE FAILURE RATE LEVEL (%/1000 HRS.) — MIL-PRF-39003/9D EXPONENTIAL M (1.0) | P (0.1) | R (0.01) | S (0.001) | MIL-PRF-39003/9D GRADED B (0.1) | C (0.01) | D (0.001) | KEMET EQUIVALENT MILITARY PART NUMBER |
|---|---|---|---|---|---|---|---|---|---|---|---|---|---|---|
| **35 VOLT RATING AT 85°C — 23 VOLT RATING AT 125°C** | | | | | | | | | | | | | | |
| 22.0 | C | 5 | 4.0 | 4 | .160 | 2.1 | 0053 | 0153 | 0253 | 0353 | 2053 | 3053 | 4053 | T262C226J035(1)S |
| 22.0 | C | 10 | 4.0 | 4 | .160 | 2.1 | 0054 | 0154 | 0254 | 0354 | 2054 | 3054 | 4054 | T262C226K035(1)S |
| 22.0 | C | 20 | 4.0 | 4 | .160 | 2.1 | 0055 | 0155 | 0255 | 0355 | 2055 | 3055 | 4055 | T262C226M035(1)S |
| 27.0 | D | 5 | 4.5 | 4 | .145 | 2.4 | 0056 | 0156 | 0256 | 0356 | 2056 | 3056 | 4056 | T262D276J035(1)S |
| 27.0 | D | 10 | 4.5 | 4 | .145 | 2.4 | 0057 | 0157 | 0257 | 0357 | 2057 | 3057 | 4057 | T262D276K035(1)S |
| 33.0 | D | 5 | 5.5 | 5 | .130 | 2.5 | 0058 | 0158 | 0258 | 0358 | 2058 | 3058 | 4058 | T262D336J035(1)S |
| 33.0 | D | 10 | 5.5 | 5 | .130 | 2.5 | 0059 | 0159 | 0259 | 0359 | 2059 | 3059 | 4059 | T262D336K035(1)S |
| 33.0 | D | 20 | 5.5 | 5 | .130 | 2.5 | 0060 | 0160 | 0260 | 0360 | 2060 | 3060 | 4060 | T262D336M035(1)S |
| 39.0 | D | 5 | 7.0 | 5 | .120 | 2.6 | 0061 | 0161 | 0261 | 0361 | 2061 | 3061 | 4061 | T262D396J035(1)S |
| 39.0 | D | 10 | 7.0 | 5 | .120 | 2.6 | 0062 | 0162 | 0262 | 0362 | 2062 | 3062 | 4062 | T262D396K035(1)S |
| 47.0 | D | 5 | 8.0 | 5 | .110 | 2.7 | 0063 | 0163 | 0263 | 0363 | 2063 | 3063 | 4063 | T262D476J035(1)S |
| 47.0 | D | 10 | 8.0 | 5 | .110 | 2.7 | 0064 | 0164 | 0264 | 0364 | 2064 | 3064 | 4064 | T262D476K035(1)S |
| 47.0 | D | 20 | 8.0 | 5 | .110 | 2.7 | 0065 | 0165 | 0265 | 0365 | 2065 | 3065 | 4065 | T262D476M035(1)S |
| **50 VOLT RATING AT 85°C — 33 VOLT RATING AT 125°C** | | | | | | | | | | | | | | |
| 5.6 | C | 5 | 2.2 | 3 | .300 | 1.5 | 0066 | 0166 | 0266 | 0366 | 2066 | 3066 | 4066 | T262C565J050(1)S |
| 5.6 | C | 10 | 2.2 | 3 | .300 | 1.5 | 0067 | 0167 | 0267 | 0367 | 2067 | 3067 | 4067 | T262C565K050(1)S |
| 6.8 | C | 5 | 2.2 | 3 | .275 | 1.6 | 0068 | 0168 | 0268 | 0368 | 2068 | 3068 | 4068 | T262C685J050(1)S |
| 6.8 | C | 10 | 2.2 | 3 | .275 | 1.6 | 0069 | 0169 | 0269 | 0369 | 2069 | 3069 | 4069 | T262C685K050(1)S |
| 6.8 | C | 20 | 2.2 | 3 | .275 | 1.6 | 0070 | 0170 | 0270 | 0370 | 2070 | 3070 | 4070 | T262C685M050(1)S |
| 8.2 | C | 5 | 2.5 | 3 | .250 | 1.6 | 0071 | 0171 | 0271 | 0371 | 2071 | 3071 | 4071 | T262C825J050(1)S |
| 8.2 | C | 10 | 2.5 | 3 | .250 | 1.6 | 0072 | 0172 | 0272 | 0372 | 2072 | 3072 | 4072 | T262C825K050(1)S |
| 10.0 | C | 5 | 2.5 | 3 | .230 | 1.7 | 0073 | 0173 | 0273 | 0373 | 2073 | 3073 | 4073 | T262C106J050(1)S |
| 10.0 | C | 10 | 2.5 | 3 | .230 | 1.7 | 0074 | 0174 | 0274 | 0374 | 2074 | 3074 | 4074 | T262C106K050(1)S |
| 10.0 | C | 20 | 2.5 | 3 | .230 | 1.7 | 0075 | 0175 | 0275 | 0375 | 2075 | 3075 | 4075 | T262C106M050(1)S |
| 12.0 | C | 5 | 3.0 | 3 | .210 | 1.8 | 0076 | 0176 | 0276 | 0376 | 2076 | 3076 | 4076 | T262C126J050(1)S |
| 12.0 | C | 10 | 3.0 | 3 | .210 | 1.8 | 0077 | 0177 | 0277 | 0377 | 2077 | 3077 | 4077 | T262C126K050(1)S |
| 15.0 | C | 5 | 4.0 | 3 | .190 | 1.9 | 0078 | 0178 | 0278 | 0378 | 2078 | 3078 | 4078 | T262C156J050(1)S |
| 15.0 | C | 10 | 4.0 | 3 | .190 | 1.9 | 0079 | 0179 | 0279 | 0379 | 2079 | 3079 | 4079 | T262C156K050(1)S |
| 15.0 | C | 20 | 4.0 | 3 | .190 | 1.9 | 0080 | 0180 | 0280 | 0380 | 2080 | 3080 | 4080 | T262C156M050(1)S |
| 18.0 | C | 5 | 4.5 | 4 | .175 | 2.0 | 0081 | 0181 | 0281 | 0381 | 2081 | 3081 | 4081 | T262C186J050(1)S |
| 18.0 | C | 10 | 4.5 | 4 | .175 | 2.0 | 0082 | 0182 | 0282 | 0382 | 2082 | 3082 | 4082 | T262C186K050(1)S |
| 22.0 | D | 5 | 5.5 | 4 | .160 | 2.3 | 0083 | 0183 | 0283 | 0383 | 2083 | 3083 | 4083 | T262D226J050(1)S |
| 22.0 | D | 10 | 5.5 | 4 | .160 | 2.3 | 0084 | 0184 | 0284 | 0384 | 2084 | 3084 | 4084 | T262D226K050(1)S |
| 22.0 | D | 20 | 5.5 | 4 | .160 | 2.3 | 0085 | 0185 | 0285 | 0385 | 2085 | 3085 | 4085 | T262D226M050(1)S |

(1) To complete the T262 Series Part Number, insert Failure Rate Symbol in the 13th Character as shown on Page 34.

T216 and T256 are KEMET's new designation for MIL-Style CSS13 and CSS33 capacitors. The T216/T256 Series is qualified to all failure rates per MIL-PRF-39003/10. Products meeting this specification have passed rigorous test requirements and are used in space applications or other equally demanding environments.

These capacitors provide circuit designers an excellent choice for blocking, bypass, decoupling, filtering and timing applications.

The T216 is available in capacitance ratings from .15 µF to 330 µF; voltage ratings from 6 VDC to 75 VDC. The T256 is available in capacitance ratings from 1.2 µF to 1000 µF with voltage ratings of 6 VDC to 50 VDC.

## CAPACITOR OUTLINE DRAWINGS

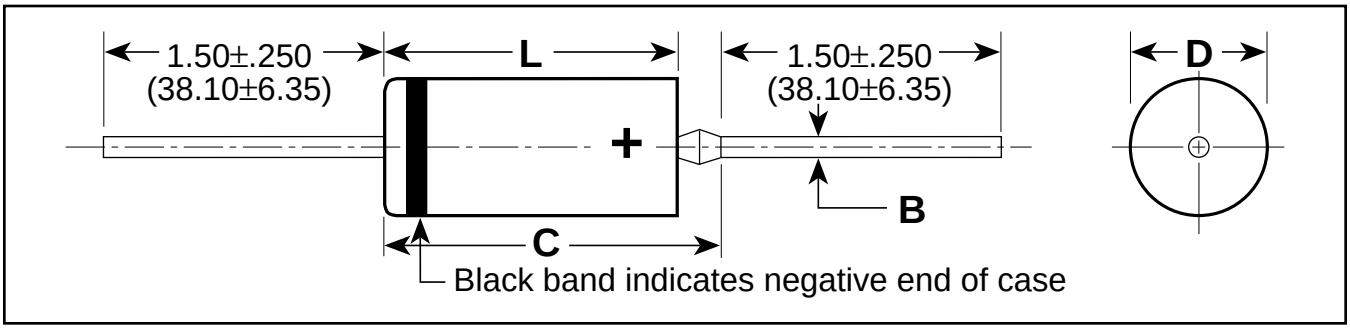


## DIMENSIONS — INCHES & (MILLIMETERS)

| CASE SIZE | UNINSULATED D ±0.005 (±.13) | UNINSULATED L ±0.031 (±.79) | INSULATED D ±0.010 (±.25) | INSULATED L ±0.031 (±.79) | B ±0.002 (±.05) | C MAX. |
|---|---|---|---|---|---|---|
| A | 0.125 (3.18) | 0.250 (6.35) | 0.135 (3.43) | 0.286 (7.26) | 0.020 (.51) | 0.422 (10.72) |
| B | 0.175 (4.45) | 0.438 (11.13) | 0.185 (4.70) | 0.474 (12.04) | 0.020 (.51) | 0.610 (15.49) |
| C | 0.279 (7.09) | 0.650 (16.51) | 0.289 (7.34) | 0.686 (17.42) | 0.025 (.64) | 0.822 (20.88) |
| D | 0.341 (8.66) | 0.750 (19.05) | 0.351 (8.92) | 0.786 (19.96) | 0.025 (.64) | 0.922 (23.42) |

## ORDERING INFORMATION

**T 2XX A 105 K 050 C S***

**TANTALUM** — T

**SERIES** — 2XX
216 — MIL-C-39003/10-CSS13
256 — MIL-C-39003/10-CSS33

**CASE SIZE** — A
A / B / C / D

**PICOFARAD CODE** — 105
First two digits represent significant figures.
3rd digit specifies no. of zeros to follow.

**CAP. TOLERANCE** — K
K — ±10%

**VOLTAGE RATING** — 050
At 85°C

**FAILURE RATE GRADED** — C
B — 0.1%/k hrs.
C — 0.01%/k hrs.

**LEAD MATERIAL** — S*
S — Standard (Solder-coated nickel)

***Part Number Example: T216A105K050CS (14 digits – no spaces)**

## MIL-PRF-39003/10 ORDERING INFORMATION

**M39003/10 — 3078S**

Military Specification Document Number

Slash Sheet Number

S — designates sleeved
U — designates unsleeved

MIL dash number signifies capacitance, voltage and failure rate (see ratings and part number tables).

## MARKING INFORMATION

### A CASE

| | |
|---|---|
| 39003 | Military specification number |
| 10 - K | Specification sheet number and trademark |
| 3078S | Military dash number and "S" for sleeved |
| +J310 | Polarity, "J" for JAN date code (1st digit indicates year and the next two digits indicate the week |
| XYA | Lot, unique lot code |

### C & D CASE

| | |
|---|---|
| M39003 | Military specification number |
| 10-2049SJ | Specification sheet number, military dash number and "J" for Jan. |
| +6.8 µF | Positive terminal identifier and capacitance value |
| 10% 35V | Capacitance tolerance and voltage rating |
| 31433 | Source code |
| 0310 NAB K | Date code, lot code, unique lot code, and trademark |

### B CASE

| | |
|---|---|
| M39003 | Military specification number |
| 10 - | Specification sheet number |
| 3082SJ | Military dash number and "J" for JAN |
| 31433 | Source code |
| +310 | Polarity, date code (1st digit indicates year and the next two digits indicate the week |
| NABK | Lot code, unique lot code and trademark. |

NOTE: Marking will include S or U after the MIL dash number, a third letter following lot symbol or lot code designates a unique lot identifier, and a black band on negative end of case.

▌ Black band on negative end.

## T216/(CSS13) RATINGS & PART NUMBER REFERENCE

| CAPACITANCE µF | CASE SIZE | KEMET EQUIVALENT PART NUMBER FOR CSS13 CAPACITORS | KEMET T216 DC LEAKAGE µA @ +25° MAX. | µA @ +85° MAX. | µA @ +125° MAX. | MAX. DISSIPATION FACTOR % @ -55°C +25°C MAX. | % @ -85°C +125°C MAX. | MAX. ESR Ω @ 25°C 100kHz | MIL-PRF-39003 (CSS13) CAPACITORS DASH NUMBER REFERENCE FAILURE RATE LEVEL (%/1000 HRS) MIL-PRF-39003/10 GRADED B (0.1) | C (0.01) |
|---|---|---|---|---|---|---|---|---|---|---|
| **6 VOLT RATING AT 85°C** | | | | | | | | | | |
| 5.6 | A | T216A565K006CS | .3 | 6.0 | 7.5 | 4 | 4 | .90 | | 3001(1) |
| 6.8 | A | T216A685K006CS | .3 | 6.0 | 7..5 | 6 | 6 | .80 | | 3002(1) |
| 47.0 | B | T216B476K006CS | 1.5 | 24.0 | 30.0 | 6 | 6 | .24 | | 3003(1) |
| 56.0 | B | T216B566K006CS | 1.5 | 24.0 | 30.0 | 6 | 6 | .24 | | 3004(1) |
| 150.0 | C | T216C157K006CS | 4.5 | 90.0 | 113.0 | 8 | 8 | .09 | | 3005(1) |
| 180.0 | C | T216C187K006CS | 5.5 | 110.0 | 138.0 | 8 | 8 | .08 | | 3006(1) |
| 270.0 | D | T216D277K006CS | 6.5 | 130.0 | 163.0 | 8 | 8 | .07 | | 3007(1) |
| 330.0 | D | T216D337K006CS | 7.5 | 150.0 | 188.0 | 8 | 8 | .06 | | 3008(1) |
| **10 VOLT RATING AT 85°C** | | | | | | | | | | |
| 3.9 | A | T216A395K010CS | .3 | 6.0 | 7.5 | 4 | 4 | 1.00 | | 3009(1) |
| 4.7 | A | T216A475K010CS | .4 | 7.0 | 8.8 | 4 | 4 | .90 | | 3010(1) |
| 27.0 | B | T216B276K010CS | 2.0 | 40.0 | 50.0 | 6 | 6 | .25 | | 3011(1) |
| 33.0 | B | T216B336K010CS | 2.5 | 50.0 | 63.0 | 6 | 6 | .24 | | 3012(1) |
| 39.0 | B | T216B396K010CS | 2.5 | 50.0 | 63.0 | 6 | 6 | .24 | | 3013(1) |
| 82.0 | C | T216C826K010CS | 4.0 | 80.0 | 100.0 | 6 | 6 | .12 | | 3014(1) |
| 100.0 | C | T216C107K010CS | 5.0 | 100.0 | 125.0 | 8 | 8 | .11 | | 3015(1) |
| 120.0 | C | T216C127K010CS | 6.0 | 120.0 | 150.0 | 8 | 8 | .10 | | 3016(1) |
| 180.0 | D | T216D187K010CS | 9.0 | 180.0 | 226.0 | 8 | 8 | .08 | | 3017(1) |
| 220.0 | D | T216D227K010CS | 10.0 | 200.0 | 250.0 | 8 | 8 | .07 | | 3018(1) |

(1) To complete, insert S for sleeved or U for unsleeved, **if "U" ordered also use C-0100**.

## RATINGS & PART NUMBER REFERENCE T216/(CSS13) (Cont'd)

| CAPACITANCE µF | CASE SIZE | KEMET EQUIVALENT PART NUMBER FOR CSS13 CAPACITORS | KEMET T216 DC LEAKAGE µA @ +25° MAX. | DC LEAKAGE µA @ +85° MAX. | DC LEAKAGE µA @ +125° MAX. | MAX. DISSIPATION FACTOR % @ -55°C +25°C MAX. | MAX. DISSIPATION FACTOR % @ -85°C +125°C MAX. | MAX. ESR Ω @ 25°C 100kHz | MIL-PRF-39003 (CSS13) CAPACITORS DASH NUMBER REFERENCE FAILURE RATE LEVEL (%/1000 HRS) MIL-PRF-39003/10 GRADED B (0.1) | C (0.01) |
|---|---|---|---|---|---|---|---|---|---|---|
| **15 VOLT RATING AT 85°C** | | | | | | | | | | |
| 2.7 | A | T216A275K015CS | .3 | 6.0 | 7.5 | 4 | 4 | 1.20 | | 3019(1) |
| 3.3 | A | T216A335K015CS | .4 | 8.0 | 10.0 | 4 | 4 | 1.00 | | 3020(1) |
| 18.0 | B | T216B186K015CS | 2.0 | 35.0 | 44.0 | 6 | 6 | .27 | | 3021(1) |
| 22.0 | B | T216B226K015CS | 2.0 | 40.0 | 50.0 | 6 | 6 | .26 | | 3022(1) |
| 56.0 | C | T216C566K015CS | 4.0 | 80.0 | 100.0 | 6 | 6 | .15 | | 3023(1) |
| 68.0 | C | T216C686K015CS | 5.0 | 100.0 | 125.0 | 6 | 6 | .13 | | 3024(1) |
| 120.0 | D | T216D127K015CS | 9.0 | 180.0 | 226.0 | 8 | 8 | .09 | | 3025(1) |
| 150.0 | D | T216D157K015CS | 10.0 | 220.0 | 250.0 | 8 | 8 | .09 | | 3026(1) |
| **20 VOLT RATING AT 85°C** | | | | | | | | | | |
| 1.2 | A | T216A125K020CS | .3 | 6.0 | 7.5 | 4 | 4 | 1.40 | | 3027(1) |
| 1.5 | A | T216A155K020CS | .3 | 6.0 | 7.5 | 4 | 4 | 1.30 | | 3028(1) |
| 1.8 | A | T216A185K020CS | .3 | 6.0 | 7.5 | 4 | 4 | 1.25 | | 3029(1) |
| 2.2 | A | T216A225K020CS | .4 | 8.0 | 10.0 | 4 | 4 | 1.20 | | 3030(1) |
| 8.2 | B | T216B825K020CS | 1.0 | 20.0 | 25.0 | 6 | 6 | .39 | | 3031(1) |
| 10.0 | B | T216B106K020CS | 1.5 | 30.0 | 38.0 | 6 | 6 | .35 | | 3032(1) |
| 12.0 | B | T216B126K020CS | 1.8 | 35.0 | 44.0 | 6 | 6 | .32 | | 3033(1) |
| 15.0 | B | T216B156K020CS | 2.0 | 40.0 | 50.0 | 6 | 6 | .29 | | 3034(1) |
| 27.0 | C | T216C276K020CS | 2.5 | 50.0 | 63.0 | 6 | 6 | .21 | | 3035(1) |
| 33.0 | C | T216C336K020CS | 3.5 | 70.0 | 88.0 | 6 | 6 | .19 | | 3036(1) |
| 39.0 | C | T216C396K020CS | 4.0 | 80.0 | 100.0 | 6 | 6 | .17 | | 3037(1) |
| 47.0 | C | T216C476K020CS | 4.5 | 90.0 | 113.0 | 6 | 6 | .16 | | 3038(1) |
| 56.0 | D | T216D566K020BS | 5.5 | 110.0 | 138.0 | 6 | 6 | .13 | 2039(1) | |
| 68.0 | D | T216D686K020BS | 7.0 | 140.0 | 175.0 | 6 | 6 | .12 | 2040(1) | |
| 82.0 | D | T216D826K020BS | 8.0 | 160.0 | 200.0 | 6 | 6 | .11 | 2041(1) | |
| 100.0 | D | T216D107K020BS | 10.0 | 200.0 | 250.0 | 8 | 8 | .10 | 2042(1) | |
| **35 VOLT RATING AT 85°C** | | | | | | | | | | |
| 5.6 | B | T216B565K035BS | 1.3 | 25.0 | 32.0 | 4 | 4 | .47 | 2043(1) | |
| 6.8 | B | T216B685K035BS | 1.5 | 30.0 | 38.0 | 6 | 6 | .43 | 2044(1) | |
| 22.0 | C | T216C226K035BS | 4.0 | 40.0 | 100.0 | 6 | 6 | .25 | 2045(1) | |
| 27.0 | D | T216D276K035BS | 4.5 | 90.0 | 113.0 | 6 | 6 | .18 | 2046(1) | |
| 33.0 | D | T216D336K035BS | 5.5 | 110.0 | 138.0 | 6 | 6 | .17 | 2047(1) | |
| 39.0 | D | T216D396K035BS | 7.0 | 140.0 | 175.0 | 6 | 6 | .15 | 2048(1) | |
| 47.0 | D | T216D476K035BS | 8.0 | 160.0 | 200.0 | 6 | 6 | .14 | 2049(1) | |
| **50 VOLT RATING AT 85°C** | | | | | | | | | | |
| .12 | A | T216A124K050CS | .3 | 5.0 | 6.3 | 2 | 4 | 6.50 | | 3067(1) |
| .15 | A | T216A154K050CS | .3 | 5.0 | 6.3 | 2 | 4 | 5.50 | | 3068(1) |
| .18 | A | T216A184K050CS | .3 | 5.0 | 6.3 | 2 | 4 | 5.00 | | 3069(1) |
| .22 | A | T216A224K050CS | .3 | 5.0 | 6.3 | 2 | 4 | 4.00 | | 3070(1) |
| .27 | A | T216A274K050CS | .3 | 5.0 | 6.3 | 2 | 4 | 3.50 | | 3071(1) |
| .33 | A | T216A334K050CS | .3 | 5.0 | 6.3 | 2 | 4 | 3.30 | | 3072(1) |
| .39 | A | T216A394K050CS | .3 | 5.0 | 6.3 | 2 | 4 | 3.20 | | 3073(1) |
| .47 | A | T216A474K050CS | .3 | 5.0 | 6.3 | 2 | 4 | 3.00 | | 3074(1) |
| .56 | A | T216A564K050CS | .3 | 5.0 | 6.3 | 2 | 4 | 2.50 | | 3075(1) |
| .68 | A | T216A684K050CS | .3 | 5.0 | 6.3 | 2 | 4 | 1.80 | | 3076(1) |
| .82 | A | T216A824K050CS | .3 | 5.0 | 6.3 | 2 | 4 | 1.60 | | 3077(1) |
| 1.0 | A | T216A105K050CS | .4 | 8.0 | 10.0 | 2 | 4 | 1.40 | | 3078(1) |
| 1.2 | B | T216B125K050CS | .4 | 9.0 | 11.0 | 4 | 4 | 1.20 | | 3079(1) |
| 1.5 | B | T216B155K050CS | .6 | 12.0 | 15.0 | 4 | 4 | 1.10 | | 3080(1) |
| 1.8 | B | T216B185K050CS | .7 | 14.0 | 18.0 | 4 | 4 | .92 | | 3081(1) |
| 2.2 | B | T216B225K050CS | .8 | 17.0 | 22.0 | 4 | 4 | .80 | | 3082(1) |
| 2.7 | B | T216B275K050CS | 1.0 | 20.0 | 25.0 | 4 | 4 | .68 | | 3083(1) |
| 3.3 | B | T216B335K050CS | 1.2 | 25.0 | 32.0 | 4 | 4 | .62 | | 3084(1) |
| 3.9 | B | T216B395K050CS | 1.5 | 30.0 | 38.0 | 4 | 4 | .56 | | 3085(1) |
| 4.7 | B | T216B475K050BS | 1.7 | 35.0 | 44.0 | 4 | 4 | .51 | 2086(1) | |
| 5.6 | C | T216C565K050CS | 2.2 | 45.0 | 56.0 | 4 | 4 | .44 | | 3087(1) |
| 6.8 | C | T216C685K050CS | 2.2 | 45.0 | 56.0 | 6 | 6 | .40 | | 3088(1) |
| 8.2 | C | T216C825K050CS | 2.5 | 50.0 | 63.0 | 6 | 6 | .36 | | 3089(1) |
| 10.0 | C | T216C106K050CS | 2.5 | 50.0 | 63.0 | 6 | 6 | .33 | | 3090((1) |
| 12.0 | C | T216C126K050BS | 3.0 | 60.0 | 75.0 | 6 | 6 | .30 | 2091(1) | |
| 15.0 | C | T216C156K020BS | 4.0 | 80.0 | 100.0 | 6 | 6 | .27 | 2092(1) | |
| 18.0 | C | T216C186K050BS | 4.5 | 90.0 | 113.0 | 6 | 6 | .25 | 2093(1) | |
| 22.0 | D | T216D226K050BS | 5.5 | 100.0 | 138.0 | 6 | 6 | .20 | 2094(1) | |

(1) To complete, insert S for sleeved or U for unsleeved, **if "U" ordered also use C-0100**.

## RATINGS & PART NUMBER REFERENCE T216/(CSS13) (Cont'd)

| CAPACITANCE µF | CASE SIZE | KEMET EQUIVALENT PART NUMBER FOR CSS13 CAPACITORS | KEMET T216 SERIES: DC LEAKAGE µA @ +25° MAX. | DC LEAKAGE µA @ +85° MAX. | DC LEAKAGE µA @ +125° MAX. | MAX. DISSIPATION FACTOR % @ -55°C +25°C MAX. | MAX. DISSIPATION FACTOR % @ -85°C +125°C MAX. | MAX. ESR Ω @ 25°C 100kHz | MIL-PRF-39003 (CSS13) CAPACITORS DASH NUMBER REFERENCE FAILURE RATE LEVEL (%/1000 HRS) MIL-PRF-39003/10 GRADED: B (0.1) | C (0.01) |
|---|---|---|---|---|---|---|---|---|---|---|
| **75 VOLT RATING AT 85°C** | | | | | | | | | | |
| .15 | A | T216A154K075CS | .3 | 5.0 | 6.3 | 2 | 4 | 4.4 | | 3097(1) |
| .18 | A | T216A184K075CS | .3 | 5.0 | 6.3 | 2 | 4 | 4.0 | | 3098(1) |
| .22 | A | T216A224K075CS | .3 | 5.0 | 6.3 | 2 | 4 | 3.5 | | 3099(1) |
| .27 | A | T216A274K075CS | .3 | 5.0 | 6.3 | 2 | 4 | 3.1 | | 3100(1) |
| .33 | A | T216A334K075CS | .3 | 5.0 | 6.3 | 2 | 4 | 2.8 | | 3101(1) |
| .39 | A | T216A394K075CS | .3 | 5.0 | 6.3 | 2 | 4 | 2.6 | | 3102(1) |
| .47 | A | T216A474K075CS | .3 | 5.0 | 6.3 | 2 | 4 | 2.4 | | 3103(1) |
| .56 | A | T216A564K075CS | .3 | 5.0 | 6.3 | 2 | 4 | 2.25 | | 3104(1) |
| .68 | A | T216A684K075CS | .3 | 5.0 | 6.3 | 2 | 4 | 2.10 | | 3105(1) |
| .82 | B | T216B824K075CS | .3 | 5.0 | 6.3 | 2 | 4 | 1.47 | | 3106(1) |
| 1.0 | B | T216B105K075CS | .4 | 5.0 | 6.3 | 2 | 4 | 1.40 | | 3107(1) |
| 1.2 | B | T216B125K075CS | .4 | 5.0 | 6.3 | 4 | 4 | 1.33 | | 3108(1) |
| 1.5 | B | T216B155K075CS | .6 | 10.0 | 13.0 | 4 | 4 | 1.06 | | 3109(1) |
| 1.8 | B | T216B185K075CS | .7 | 10.0 | 13.0 | 4 | 4 | .92 | | 3110(1) |
| 2.2 | B | T216B225K075CS | .8 | 15.0 | 19.0 | 4 | 4 | .80 | | 3111(1) |
| 2.7 | B | T216B275K075BS | 1.0 | 15.0 | 19.0 | 4 | 4 | .68 | 2112(1) | |
| 3.3 | B | T216B335K075BS | 1.2 | 20.0 | 25.0 | 4 | 4 | .62 | 2113(1) | |
| 3.9 | B | T216B395K075BS | 1.5 | 20.0 | 25.0 | 4 | 4 | .56 | 2114(1) | |
| 4.7 | C | T216C475K075BS | 3.0 | 60.0 | 75.0 | 4 | 4 | .47 | 2115(1) | |
| 5.6 | C | T216C565K075BS | 3.0 | 60.0 | 75.0 | 4 | 4 | .44 | 2116(1) | |
| 6.8 | C | T216C685K075BS | 5.0 | 100.0 | 125.0 | 6 | 6 | .44 | 2117(1) | |
| 8.2 | C | T216C825K075BS | 5.0 | 100.0 | 125.0 | 6 | 6 | .36 | 2118(1) | |
| 10.0 | C | T216C106K075BS | 5.0 | 100.0 | 125.0 | 6 | 6 | .33 | 2119(1) | |
| 12.0 | D | T216D126K075BS | 5.0 | 100.0 | 125.0 | 6 | 6 | .26 | 2120(1) | |
| 15.0 | D | T216D156K075BS | 7.0 | 140.0 | 175.0 | 6 | 6 | .23 | 2121(1) | |

## T256/(CSS33) RATINGS AND PART NUMBER REFERENCE

| CAPACITANCE µF | CASE SIZE | KEMET EQUIVALENT PART NUMBER FOR CSS33 CAPACITORS | KEMET T256 SERIES: DC LEAKAGE µA @ +25° MAX. | DC LEAKAGE µA @ +85° MAX. | DC LEAKAGE µA @ +125° MAX. | MAX. DISSIPATION FACTOR % @ -55°C +25°C MAX. | MAX. DISSIPATION FACTOR % @ -85°C +125°C MAX. | MAX. ESR Ω @ 25°C 100kHz | MIL-PRF-39003 (CSS33) CAPACITORS DASH NUMBER REFERENCE FAILURE RATE LEVEL (%/1000 HRS) MIL-PRF-39003/10 GRADED: B (0.1) | C (0.01) |
|---|---|---|---|---|---|---|---|---|---|---|
| **6 VOLT RATING AT 85°C** | | | | | | | | | | |
| 10.0 | A | T256A106K006CS | .5 | 2.0 | 2.0 | 6 | 6 | .70 | | 3500(1) |
| 12.0 | A | T256A126K006CS | .5 | 2.0 | 2.0 | 6 | 6 | .60 | | 3501(1) |
| 100.0 | B | T256B107K006CS | 1.0 | 3.0 | 3.0 | 8 | 8 | .20 | | 3502(1) |
| 330.0 | C | T256C337K006BS | 2.0 | 8.0 | 8.0 | 8 | 8 | .065 | 2503(1) | |
| 390.0 | C | T256C397K006BS | 2.0 | 8.0 | 8.0 | 10 | 10 | .065 | 2504(1) | |
| 470.0 | C | T256C477K006BS | 2.0 | 8.0 | 8.0 | 10 | 10 | .060 | 2505(1) | |
| 680.0 | D | T256D687K006CS | 5.0 | 10.0 | 10.0 | 10 | 10 | .060 | | 3506(1) |
| 820.0 | D | T256D827K006CS | 5.0 | 10.0 | 10.0 | 10 | 10 | .055 | | 3507(1) |
| 1000.0 | D | T256D108K006CS | 5.0 | 10.0 | 10.0 | 10 | 10 | .050 | | 3508(1) |
| **10 VOLT RATING AT 85°C** | | | | | | | | | | |
| 6.8 | A | T256A685K010CS | .5 | 2.0 | 2.0 | 6 | 6 | .80 | | 3509(1) |
| 8.2 | A | T256A825K010CS | .5 | 2.0 | 2.0 | 6 | 6 | .70 | | 3510(1) |
| 47.0 | B | T256B476K010CS | 1.0 | 2.0 | 2.0 | 6 | 6 | .22 | | 3511(1) |
| 56.0 | B | T256B566K010CS | 1.0 | 4.0 | 4.0 | 6 | 6 | .20 | | 3512(1) |
| 68.0 | B | T256B686K010CS | 1.0 | 4.0 | 4.0 | 6 | 6 | .18 | | 3513(1) |
| 82.0 | B | T256B826K010CS | 1.0 | 4.0 | 4.0 | 6 | 6 | .15 | | 3514(1) |
| 220.0 | C | T256C227K010BS | 1.0 | 7.0 | 7.0 | 8 | 8 | .090 | 2515(1) | |
| 270.0 | C | T256C277K010BS | 2.0 | 10.0 | 10.0 | 8 | 8 | .075 | 2516(1) | |
| 390.0 | D | T256D397K010CS | 2.0 | 16.0 | 16.0 | 10 | 10 | .070 | | 3517(1) |
| 470.0 | D | T256D477K010CS | 4.0 | 16.0 | 16.0 | 10 | 10 | .065 | | 3518(1) |
| 560.0 | D | T256D567K010CS | 4.0 | 16.0 | 16.0 | 10 | 10 | .060 | | 3519(1) |

(1) To complete, insert S for sleeved or U for unsleeved, **if "U" ordered also use C-0100**.

## RATINGS AND PART NUMBER REFERENCE T256/(CSS33) (Cont'd)

| CAPACITANCE µF | KEMET T256 SERIES | | | | | | | | MIL-PRF-39003 (CSS33) CAPACITORS | |
|---|---|---|---|---|---|---|---|---|---|---|
| | CASE SIZE | KEMET EQUIVALENT PART NUMBER FOR CSS33 CAPACITORS | DC LEAKAGE | | | MAX. DISSIPATION FACTOR | | MAX. ESR Ω @ 25°C 100kHz | DASH NUMBER REFERENCE FAILURE RATE LEVEL (%/1000 HRS) MIL-PRF-39003/10 GRADED | |
| | | | µA @ +25° MAX. | µA @ +85° MAX. | µA @ +125° MAX. | % @ -55°C +25°C MAX. | % @ -85°C +125°C MAX. | | B (0.1) | C (0.01) |
| **15 VOLT RATING AT 85°C** | | | | | | | | | | |
| 4.7 | A | T256A475K015CS | .5 | 2.0 | 2.0 | 4 | 4 | .90 | | 3520(1) |
| 5.6 | A | T256A565K015CS | .5 | 2.0 | 2.0 | 4 | 4 | .80 | | 3521(1) |
| 33.0 | B | T256B336K015CS | 1.0 | 2.0 | 2.0 | 6 | 6 | .24 | | 3522(1) |
| 39.0 | B | T256B396K015CS | 1.0 | 2.0 | 2.0 | 6 | 6 | .22 | | 3523(1) |
| 150.0 | C | T256C157K015BS | 1.0 | 7.0 | 7.0 | 8 | 8 | .10 | 2524(1) | |
| 180.0 | C | T256C187K015BS | 2.0 | 10.0 | 10.0 | 8 | 8 | .09 | 2525(1) | |
| 220.0 | D | T256D227K015BS | 2.0 | 10.0 | 10.0 | 8 | 8 | .07 | 2526(1) | |
| 270.0 | D | T256D277K015BS | 2.0 | 16.0 | 16.0 | 8 | 8 | .065 | 2527(1) | |
| 330.0 | D | T256D337K015BS | 2.0 | 16.0 | 16.0 | 8 | 8 | .060 | 2528(1) | |
| **20 VOLT RATING AT 85°C** | | | | | | | | | | |
| 2.7 | A | T256A275K020CS | .5 | 2.0 | 2.0 | 4 | 4 | 1.15 | | 3529(1) |
| 3.3 | A | T256A335K020CS | .5 | 2.0 | 2.0 | 4 | 4 | .95 | | 3530(1) |
| 3.9 | A | T256A395K020CS | .5 | 2.0 | 2.0 | 4 | 4 | .90 | | 3531(1) |
| 18.0 | B | T256B186K020CS | 1.0 | 2.0 | 2.0 | 6 | 6 | .27 | | 3532(1) |
| 22.0 | B | T256B226K020BS | 1.0 | 2.0 | 2.0 | 6 | 6 | .26 | 2533(1) | |
| 27.0 | B | T256B276K020BS | 1.0 | 2.0 | 2.0 | 6 | 6 | .24 | 2534(1) | |
| 56.0 | C | T256C566K020CS | 1.0 | 10.0 | 10.0 | 6 | 6 | .15 | | 3535(1) |
| 68.0 | C | T256C686K020CS | 1.0 | 10.0 | 10.0 | 6 | 6 | .14 | | 3536(1) |
| 82.0 | C | T256C826K020BS | 1.0 | 10.0 | 10.0 | 6 | 6 | .12 | 2537(1) | |
| 100.0 | C | T256C107K020BS | 1.0 | 10.0 | 10.0 | 6 | 6 | .10 | 2538(1) | |
| 120.0 | C | T256C127K020BS | 1.0 | 10.0 | 10.0 | 6 | 6 | .09 | 2539(1) | |
| 150.0 | D | T256D157K020BS | 2.0 | 10.0 | 10.0 | 8 | 8 | .08 | 2540(1) | |
| 180.0 | D | T256D187K020BS | 2.0 | 10.0 | 10.0 | 8 | 8 | .07 | 2541(1) | |
| **35 VOLT RATING AT 85°C** | | | | | | | | | | |
| 1.8 | A | T256A185K035BS | .5 | 2.0 | 2.0 | 4 | 4 | .20 | 2542(1) | |
| 8.2 | B | T256B825K035BS | 1.0 | 2.0 | 2.0 | 6 | 6 | .40 | 2543(1) | |
| 10.0 | B | T256B106K035BS | 1.0 | 2.0 | 2.0 | 6 | 6 | .35 | 2544(1) | |
| 33.0 | C | T256C336K035BS | 1.0 | 5.0 | 5.0 | 6 | 6 | .19 | 2545(1) | |
| 39.0 | C | T256C396K035BS | 1.0 | 5.0 | 5.0 | 6 | 6 | .17 | 2546(1) | |
| 47.0 | C | T256C476K035BS | 1.0 | 5.0 | 5.0 | 6 | 6 | .15 | 2547(1) | |
| 56.0 | D | T256D566K035BS | 2.0 | 10.0 | 10.0 | 6 | 6 | .13 | 2548(1) | |
| 68.0 | D | T256D686K035BS | 2.0 | 10.0 | 10.0 | 6 | 6 | .12 | 2549(1) | |
| **50 VOLT RATING AT 85°C** | | | | | | | | | | |
| 1.2 | A | T256A125K050BS | .5 | 2.0 | 2.0 | 4 | 4 | 1.30 | 2550(1) | |
| 1.5 | A | T256A155K050BS | .5 | 2.0 | 2.0 | 4 | 4 | 1.20 | 2551(1) | |
| 5.6 | B | T256B565K050BS | 1.0 | 2.0 | 2.0 | 4 | 4 | .47 | 2552(1) | |
| 6.8 | B | T256B685K050BS | 1.0 | 2.0 | 2.0 | 6 | 6 | .43 | 2553(1) | |
| 22.0 | C | T256C226K050BS | 1.0 | 5.0 | 5.0 | 6 | 6 | .22 | 2554(1) | |
| 27.0 | C | T256C276K050BS | 1.0 | 5.0 | 5.0 | 6 | 6 | .20 | 2555(1) | |
| 33.0 | D | T256D336K050BS | 1.0 | 9.0 | 9.0 | 6 | 6 | .18 | 2556(1) | |
| 39.0 | D | T256D396K050BS | 1.0 | 9.0 | 9.0 | 6 | 6 | .16 | 2557(1) | |

(1) To complete, insert S for sleeved or U for unsleeved, **if "U" ordered also use C-0100**.

The KEMET T322 AND T323 (CX01 & CX05) Series offers a complete line of extended range molded solid tantalum capacitors designed specifically for high speed automatic insertion applications. These capacitors offer an extremely high capacitance-to-volume ratio while still maintaining excellent performance characteristics.

Supplied in six axial lead tubular case sizes, these capacitors are ideally suited for use in printed wiring boards and all applications requiring a high degree of packaging density and can be supplied in bulk packaging or lead-taped on reels.

The T322/T323 Series dimensions and tight lead wire-to-body concentricity permit installation by the same automatic insertion equipment used for diodes and resistors. Available in working voltages of 2, 4, 6, 10, 15, 20, 25, 35, and 50 volts. Operating temperature range -55°C to +85°C at full rated voltage and with ⅔ 85°C rated voltage at 125°C.

The gold color epoxy utilized permits laser marking with outstanding permanency and legibility.

T323 Series capacitors are qualified under MIL-PRF-49137/1 & 5 as Military Style CX01 & CX05.

Typical applications include decoupling, blocking, bypassing and filtering in commercial computers, data processing, communications, and other electronic equipment. The low ESR/impedance at high frequencies offered by this capacitor is especially suitable for decoupling required by high speed computers.

## PERFORMANCE CHARACTERISTICS

- CAPACITANCE/VOLTAGE RANGE: 0.1-330µF, 2-50 Volts.
- CAPACITANCE TOLERANCE: Available in standard EIA nominal values with ±20%, ±10% and ±5% tolerance.
- DISSIPATION FACTOR: Maximum DF limits are shown in corresponding series part number listings on pages 44-48. See Application Notes Section, page 76 for additional description.
- DC LEAKAGE CURRENT: Each corresponding part number table lists maximum leakage current for each capacitor on pages 44 through 48. See Application Notes Section, page 76 for additional description.
- RATED VOLTAGE; WORKING VOLTAGE; SURGE VOLTAGE; REVERSE VOLTAGE: See Application Notes Section, page 76 & 77 for description.
- AC RIPPLE VOLTAGE: Permissible AC ripple voltage is related to equivalent series resistance (ESR) and power dissipation capability. Maximum power dissipation for each case size is listed in Table below. For additional description see page 79.

| Case Size | Power Dissipation (max.) @ 25°C (watts) |
|---|---|
| A | .060 |
| B | .070 |
| C | .080 |
| D | .090 |
| E | .100 |
| F | .110 |

**Maximum Power Dissipation Capability @ 25°C**

- IMPEDANCE and ESR: See Application Notes Section, pages 77 & 78 for description. Reference ESR values are shown in adjoining column, this page.
- ENVIRONMENTAL CONSIDERATIONS:
  A. Shock Test: MIL-STD-202, Method 213.
  B. Thermal Shock, MIL-STD-202, Method 107.
  C. Moisture Resistance: MIL-STD-202, Method 106.
  D. Solderability: MIL-STD-202, Method 208.

**T322 ESR (OHMS) at 100 kHz @ +25°C**
**(The ESR values provided below are for reference only. No warranty, as stated on page 3 and reincorporated here, is made as to the accuracy of these values for any particular T322 Series product.)**

| Cap. µF | 6 Volt | 10 Volt | 15 Volt | 20 Volt | 25 Volt | 35 Volt | 50 Volt |
|---|---|---|---|---|---|---|---|
| 0.10 | | | | | | 26.0 | 26.0 |
| 0.12 | | | | | | 26.0 | 26.0 |
| 0.15 | | | | | | 21.0 | 21.0 |
| 0.18 | | | | | | 21.0 | 21.0 |
| 0.22 | | | | | | 17.0 | 17.0 |
| 0.27 | | | | | | 17.0 | 17.0 |
| 0.33 | | | | | | 15.0 | 15.0 |
| 0.39 | | | | | | 15.0 | 15.0 |
| 0.47 | | | | | 16.0 | 13.0 | 13.0 |
| 0.56 | | | | | 14.0 | 13.0 | 13.0 |
| 0.68 | | | | | 12.0 | 10.0 | 10.0 |
| 0.82 | | | | | 12.0 | 10.0 | 10.0 |
| 1.00 | | | | 10.0 | 10.0 | 8.0 | 8.0 |
| 1.20 | | | | 10.0 | 10.0 | 8.0 | 8.0 |
| 1.50 | | | 10.0 | 9.0 | 8.0 | 6.0 | 5.0 |
| 1.80 | | | 10.0 | 9.0 | 8.0 | 6.0 | 5.0 |
| 2.20 | | 13.0 | 8.0 | 7.0 | 6.0 | 5.0 | 3.5 |
| 2.70 | | 13.0 | 8.0 | 7.0 | 6.0 | 5.0 | 3.5 |
| 3.30 | 13.0 | 10.0 | 6.0 | 5.5 | 5.0 | 4.0 | 3.0 |
| 3.90 | 13.0 | 10.0 | 6.0 | 5.5 | 5.0 | 4.0 | 3.0 |
| 4.70 | 10.0 | 8.0 | 5.0 | 4.5 | 4.0 | 3.0 | 2.5 |
| 5.60 | 10.0 | 8.0 | 5.0 | 4.5 | 4.0 | 3.0 | 2.5 |
| 6.80 | 8.0 | 6.0 | 4.0 | 3.6 | 3.1 | 2.5 | 2.0 |
| 8.20 | 8.0 | 6.0 | 4.0 | 3.6 | 3.1 | 2.5 | 2.0 |
| 10.0 | 6.0 | 5.0 | 3.2 | 2.9 | 2.5 | 2.0 | 1.6 |
| 12.0 | 6.0 | 5.0 | 3.2 | 2.9 | 2.5 | 2.0 | 1.6 |
| 15.0 | 5.0 | 3.7 | 2.5 | 2.3 | 2.0 | 1.6 | 1.2 |
| 18.0 | 5.0 | 3.7 | 2.5 | 2.3 | 2.0 | 1.6 | 1.2 |
| 22.0 | 3.7 | 2.7 | 2.0 | 1.8 | 1.5 | 1.3 | 1.0 |
| 27.0 | 3.7 | 2.7 | 2.0 | 1.8 | 1.5 | 1.3 | 1.0 |
| 33.0 | 3.0 | 2.1 | 1.6 | 1.4 | 1.2 | 1.0 | |
| 39.0 | 3.0 | 2.1 | 1.6 | 1.4 | 1.2 | 1.0 | |
| 47.0 | 2.0 | 1.7 | 1.3 | 1.2 | 1.0 | 0.8 | |
| 56.0 | 2.0 | 1.7 | 1.3 | 1.2 | 1.0 | | |
| 68.0 | 1.8 | 1.3 | 1.0 | 0.9 | 0.8 | | |
| 82.0 | 1.8 | 1.3 | 1.0 | 0.9 | | | |
| 100.0 | 1.6 | 1.0 | 0.8 | 0.6 | | | |
| 120.0 | 1.6 | 1.0 | 0.8 | | | | |
| 150.0 | 0.9 | 0.8 | 0.6 | | | | |
| 180.0 | 0.9 | 0.8 | | | | | |
| 220.0 | 0.9 | 0.6 | | | | | |
| 270.0 | 0.9 | | | | | | |
| 330.0 | 0.7 | | | | | | |

For additional Environmental Test Information see pages 80, 81 and 82.

- LEAD MATERIAL: Solder coated steel core with copper ply per MIL-STD-1276.
- LEAD TAPE and REEL: Reeling per specification RS-296. See pages 71 and 73 for additional information.

# TANTALUM MOLDED / AXIAL — MIL-PRF-49137/1 & 5

## T322 & T323 (CX01 & CX05) SERIES

**Effective September 30, 2005, the KEMET T322 Series is RoHS compliant.**

## CAPACITOR OUTLINE DRAWINGS

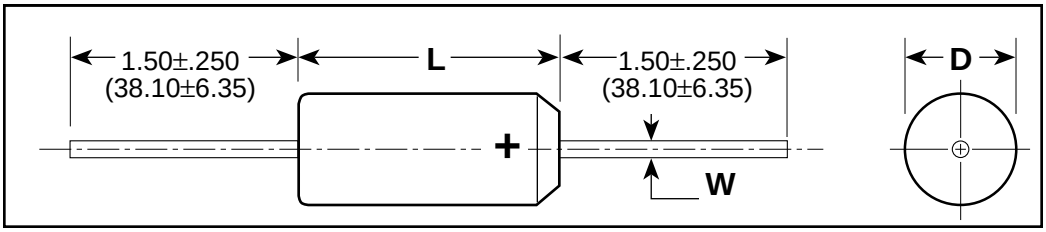


## DIMENSIONS — INCHES & (MILLIMETERS)

| CASE SIZE | D (MAX) | L (MAX) | W |
|---|---|---|---|
| A | .095 (2.41) | .260 (6.6) | .020 (.51) |
| B | .110 (2.79) | .290 (7.37) | .020 (.51) |
| C | .180 (4.57) | .345 (8.76) | .020 (.51) |
| D | .180 (4.57) | .420 (10.67) | .020 (.51) |
| E | .280 (7.11) | .530 (13.46) | .025 (.64) |
| F | .300 (7.62) | .710 (18.03) | .025 (.64) |

## T322 & T323 ORDERING INFORMATION

**T 32X A 474 M 035 A S — C***

**TANTALUM**

**SERIES**
Sub-Miniature, Molded, Polar, Solid Tantalum, Insert appropriate number to replace letter "X" — 322 or 323 (CX01, CX05).

**CASE SIZE**
A, B, C, D, E, or F

**CAPACITANCE IN PICOFARADS**
First two digits are significant figures. Third digit is number of zeros following.

**SPECIFICATION (when necessary**
— Reeling Per EIA Specification RS-296

**LEAD MATERIAL**
S — Standard
T – 100% Tin

**FAILURE RATE LEVEL**
A — Not Applicable

**VOLTAGE RATING**

**CAPACITANCE TOLERANCE**
*M — ±20%
*K — ±10%
*J — ±5%

***Part Number Example: T322A474M035AS (14 digits – no spaces)**

* M & K only tolerances available for T323 Series.

## MIL-PRF-49137/5 MILITARY ORDERING INFORMATION

**CX 05 D 225 K**

**TYPE**
Capacitor, Fixed, Solid Tantalum, Molded, Non-hermetically Sealed

**STYLE**
01, 05 (T323) A, B, C, and D

**VOLTAGE**

| Symbol | Rated (85°C) Volts, DC | Surge (85°C) Volts, DC |
|---|---|---|
| D | 6 | 8.0 |
| F | 10 | 13.0 |
| H | 15 | 20.0 |
| J | 20 | 26.0 |
| K | 25 | 32.0 |
| M | 35 | 46.0 |
| N | 50 | 65.0 |

**CAPACITANCE TOLERANCE**

| Symbol | Capacitance Tolerance Percent (±) |
|---|---|
| K | 10 |
| M | 20 |

**CAPACITANCE TOLERANCE**
The nominal capacitance value, expressed in picofarads (pF), is identified by a three-digit number; the first two digits represent significant figures and the last digit specifies the number of zeros to follow.

## CAPACITOR MARKING

| | |
|---|---|
| 105M | Capacitance Value (pF), Capacitance Tolerance |
| +25 K | Polarity, Voltage, KEMET |
| 0324 | Date Code (Year, Week) |

## RATINGS & PART NUMBER REFERENCE

| CAPACITANCE µF | CASE SIZE | CAPACITANCE TOLERANCE ±% | KEMET T322 SERIES KEMET PART NUMBER | D.C. LEAKAGE µA@25°C | MAX. DISSIPATION FACTOR %@25°C, 120 HZ | CX01 & CXO5 CAPACITORS PER MIL-PRF-49137/1 & 5 MILITARY PART NUMBER | KEMET PART NUMBER |
|---|---|---|---|---|---|---|---|
| **2 VOLT RATING AT 85°C — 1.3 VOLT RATING AT 125°C** | | | | | | | |
| **6.8** | **A** | **5,10,20** | **T322A685(1)002AS** | **0.5** | **10** | | |
| 8.2 | A | 5,10,20 | T322A825(1)002AS | 0.5 | 10 | | |
| 10.0 | A | 5,10,20 | T322A106(1)002AS | 0.5 | 10 | | |
| 12.0 | B | 5,10,20 | T322B126(1)002AS | 0.5 | 10 | | |
| **15.0** | **B** | **5,10,20** | **T322B156(1)002AS** | **0.5** | **10** | | |
| 18.0 | B | 5,10,20 | T322B186(1)002AS | 0.5 | 10 | | |
| **22.0** | **B** | **5,10,20** | **T322B226(1)002AS** | **0.5** | **10** | | |
| 27.0 | B | 5,10,20 | T322B276(1)002AS | 0.5 | 10 | | |
| **33.0** | **B** | **5,10,20** | **T322B336(1)002AS** | **0.5** | **10** | | |
| 39.0 | C | 5,10,20 | T322C396(1)002AS | 0.6 | 10 | | |
| **47.0** | **C** | **5,10,20** | **T322C476(1)002AS** | **0.8** | **10** | | |
| 56.0 | C | 5,10,20 | T322C566(1)002AS | 0.9 | 10 | | |
| **68.0** | **C** | **5,10,20** | **T322C686(1)002AS** | **1.1** | **10** | | |
| **4 VOLT RATING AT 85°C — 2.7 VOLT RATING AT 125°C** | | | | | | | |
| **4.7** | **A** | **5,10,20** | **T322A475(1)004AS** | **0.5** | **8** | | |
| 5.6 | A | 5,10,20 | T322A565(1)004AS | 0.5 | 8 | | |
| **6.8** | **A** | **5,10,20** | **T322A685(1)004AS** | **0.5** | **8** | | |
| 8.2 | B | 5,10,20 | T322B825(1)004AS | 0.5 | 8 | | |
| **10.0** | **B** | **5,10,20** | **T322B106(1)004AS** | **0.5** | **8** | | |
| 12.0 | B | 5,10,20 | T322B126(1)004AS | 0.5 | 8 | | |
| **15.0** | **B** | **5,10,20** | **T322B156(1)004AS** | **0.5** | **8** | | |
| 18.0 | B | 5,10,20 | T322B186(1)004AS | 0.6 | 8 | | |
| **22.0** | **B** | **5,10,20** | **T322B226(1)004AS** | **0.7** | **8** | | |
| 27.0 | C | 5,10,20 | T322C276(1)004AS | 0.9 | 8 | | |
| **33.0** | **C** | **5,10,20** | **T322C336(1)004AS** | **1.1** | **8** | | |
| 39.0 | C | 5,10,20 | T322C396(1)004AS | 1.2 | 8 | | |
| **47.0** | **C** | **5,10,20** | **T322C476(1)004AS** | **1.5** | **8** | | |
| 56.0 | D | 5,10,20 | T322D566(1)004AS | 1.8 | 8 | | |
| **68.0** | **D** | **5,10,20** | **T322D686(1)004AS** | **2.2** | **8** | | |
| **6 VOLT RATING AT 85°C — 4 VOLT RATING AT 125°C** | | | | | | | |
| **3.3** | **A** | **5,10,20** | **T322A335(1)006AS** | **0.5** | **4** | | |
| 3.9 | A | 5,10,20 | T322A395(1)006AS | 0.5 | 4 | | |
| **4.7** | **A** | **5** | **T322A475J006AS** | **0.5** | **4** | | |
| **4.7** | **A** | **10** | **T322A475K006AS** | **0.5** | **4** | **CX05D475K** | **T323A475K006AS** |
| **4.7** | **A** | **20** | **T322A475M006AS** | **0.5** | **4** | **CX05D475M** | **T323A475M006AS** |
| 5.6 | B | 5 | T322B565J006AS | 0.5 | 4 | | |
| 5.6 | B | 10 | T322B565K006AS | 0.5 | 4 | CX01D565K | T323B565K 006AS |
| 5.6 | B | 20 | T322B565M006AS | 0.5 | 4 | CX01D565M | T323B565M006AS |
| **6.8** | **B** | **5** | **T322B685J006AS** | **0.5** | **6** | | |
| **6.8** | **B** | **10** | **T322B685K006AS** | **0.5** | **6** | **CX01D685K** | **T323B685K006AS** |
| **6.8** | **B** | **20** | **T322B685M006AS** | **0.5** | **6** | **CX01D685M** | **T323B685M006AS** |
| 8.2 | B | 5 | T322B825J006AS | 0.5 | 6 | | |
| 8.2 | B | 10 | T322B825K006AS | 0.5 | 6 | CX01D825K | T323B825K 006AS |
| 8.2 | B | 20 | T322B825M006AS | 0.5 | 6 | CX01D825M | T323B825M006AS |
| **10.0** | **B** | **5** | **T322B106J006AS** | **0.5** | **6** | | |
| **10.0** | **B** | **10** | **T322B106K006AS** | **0.5** | **6** | **CX01D106K** | **T323B106K006AS** |
| **10.0** | **B** | **20** | **T322B106M006AS** | **0.5** | **6** | **CX01D106M** | **T323B106M006AS** |
| 12.0 | B | 5 | T322B126J006AS | 0.6 | 6 | | |
| 12.0 | B | 10 | T322B126K006AS | 0.6 | 6 | CX01D126K | T323B126K 006AS |
| 12.0 | B | 20 | T322B126M006AS | 0.6 | 6 | CX01D126M | T323B126M006AS |
| **15.0** | **B** | **5** | **T322B156J006AS** | **0.7** | **6** | | |
| **15.0** | **B** | **10** | **T322B156K006AS** | **0.7** | **6** | **CX05D156K** | **T323B156K006AS** |
| **15.0** | **B** | **20** | **T322B156M006AS** | **0.7** | **6** | **CX05D156M** | **T323B156M006AS** |
| 18.0 | C | 5,10,20 | T322C186(1)006AS | 0.9 | 6 | | |
| **22.0** | **C** | **5,10,20** | **T322C226(1)006AS** | **1.1** | **6** | | |
| 27.0 | C | 5,10,20 | T322C276(1)006AS | 1.3 | 6 | | |
| **33.0** | **C** | **5** | **T322C336J006AS** | **1.5** | **6** | | |
| **33.0** | **C** | **10** | **T322C336K006AS** | **1.5** | **6** | **CX05D336K** | **T323C336K006AS** |
| **33.0** | **C** | **20** | **T322C336M006AS** | **1.5** | **6** | **CX05D336M** | **T323C336M006AS** |
| 39.0 | D | 5,10,20 | T322D396(1)006AS | 1.9 | 6 | | |
| **47.0** | **D** | **5** | **T322D476J006AS** | **2.3** | **6** | | |
| **47.0** | **D** | **10** | **T322D476K006AS** | **2.3** | **6** | **CX05D476K** | **T323D476K006AS** |
| **47.0** | **D** | **20** | **T322D476M006AS** | **2.3** | **6** | **CX05D476M** | **T323D476M006AS** |
| 56.0 | D | 5,10,20 | T322D566(1)006AS | 2.7 | 6 | | |
| **68.0** | **D** | **5,10,20** | **T322D686(1)006AS** | **3.3** | **6** | | |

(1) To complete KEMET Part Number, insert Capacitance Tolerance Symbol as follows: M — ±20%, K — ±10%, J — ±5%
**Bold Face** lines indicate preferred part types and values.

## RATINGS & PART NUMBER REFERENCE

| CAPACITANCE µF | CASE SIZE | CAPACITANCE TOLERANCE ±% | KEMET T322 SERIES: KEMET PART NUMBER | KEMET T322 SERIES: D.C. LEAKAGE µA@25°C | KEMET T322 SERIES: MAX. DISSIPATION FACTOR %@25°C, 120 HZ | CX01 & CX05 CAPACITORS PER MIL-PRF-49137/1 & 5: MILITARY PART NUMBER | CX01 & CX05 CAPACITORS PER MIL-PRF-49137/1 & 5: KEMET PART NUMBER |
|---|---|---|---|---|---|---|---|
| **6 VOLT RATING AT 85°C — 4 VOLT RATING AT 125°C (Cont'd)** | | | | | | | |
| 82.0 | E | 5,10,20 | T322E826(1)006AS | 3.9 | 8 | | |
| **100.0** | **E** | **5,10,20** | **T322E107(1)006AS** | **4.8** | **8** | | |
| 120.0 | E | 5,10,20 | T322E127(1)006AS | 5.0 | 8 | | |
| **150.0** | **E** | **5,10,20** | **T322E157(1)006AS** | **5.0** | **8** | | |
| 180.0 | E | 5,10,20 | T322E187(1)006AS | 8.6 | 8 | | |
| **220.0** | **E** | **5,10,20** | **T322E227(1)006AS** | **10.0** | **8** | | |
| 270.0 | F | 5,10,20 | T322F277(1)006AS | 10.0 | 8 | | |
| **330.0** | **F** | **5,10,20** | **T322F337(1)006AS** | **10.0** | **8** | | |
| **10 VOLT RATING AT 85°C — 7 VOLT RATING AT 125°C** | | | | | | | |
| **2.2** | **A** | **5,10,20** | **T322A225(1)010AS** | **0.5** | **4** | | |
| 2.7 | A | 5,10,20 | T322A275(1)010AS | 0.5 | 4 | | |
| **3.3** | **A** | **5** | **T322A335J010AS** | **0.5** | **4** | | |
| **3.3** | **A** | **10** | **T322A335K010AS** | **0.5** | **4** | **CX05F335K** | **T323A335K010AS** |
| **3.3** | **A** | **20** | **T322A335M010AS** | **0.5** | **4** | **CX05F335M** | **T323A335M010AS** |
| 3.9 | B | 5,10,20 | T322B395(1)010AS | 0.5 | 4 | | |
| **4.7** | **B** | **5,10,20** | **T322B475(1)010AS** | **0.5** | **4** | | |
| 5.6 | B | 5,10,20 | T322B565(1)010AS | 0.5 | 4 | | |
| **6.8** | **B** | **5,10,20** | **T322B685(1)010AS** | **0.5** | **6** | | |
| 8.2 | B | 5,10,20 | T322B825(1)010AS | 0.7 | 6 | | |
| **10.0** | **B** | **5** | **T322B106J010AS** | **0.8** | **6** | | |
| **10.0** | **B** | **10** | **T322B106K010AS** | **0.8** | **6** | **CX05F106K** | **T323B106K010AS** |
| **10.0** | **B** | **20** | **T322B106M010AS** | **0.8** | **6** | **CX05F106M** | **T323B106M010AS** |
| 12.0 | C | 5,10,20 | T322C126(1)010AS | 1.0 | 6 | | |
| **15.0** | **C** | **5,10,20** | **T322C156(1)010AS** | **1.2** | **6** | | |
| 18.0 | C | 5,10,20 | T322C186(1)010AS | 1.4 | 6 | | |
| **22.0** | **C** | **5** | **T322C226J010AS** | **1.5** | **6** | | |
| **22.0** | **C** | **10** | **T322C226K010AS** | **1.5** | **6** | **CX05F226K** | **T323C226K010AS** |
| **22.0** | **C** | **20** | **T322C226M010AS** | **1.5** | **6** | **CX05F226M** | **T323C226M010AS** |
| 27.0 | D | 5 | T322D276J010AS | 2.2 | 6 | | |
| 27.0 | D | 10 | T322D276K010AS | 2.2 | 6 | CX05F276K | T323D276K010AS |
| 27.0 | D | 20 | T322D276M010AS | 2.2 | 6 | CX05F276M | T323D276M010AS |
| **33.0** | **D** | **5** | **T322D336J010AS** | **2.6** | **6** | | |
| **33.0** | **D** | **10** | **T322D336K010AS** | **2.6** | **6** | **CX05F336K** | **T323D336K010AS** |
| **33.0** | **D** | **20** | **T322D336M010AS** | **2.6** | **6** | **CX05F336M** | **T323D336M010AS** |
| 39.0 | D | 5 | T322D396J010AS | 3.1 | 6 | | |
| 39.0 | D | 10 | T322D396K010AS | 3.1 | 6 | CX05F396K | T323D396K010AS |
| 39.0 | D | 20 | T322D396M010AS | 3.1 | 6 | CX05F396M | T323D396M010AS |
| **47.0** | **D** | **5** | **T322D476J010AS** | **3.8** | **6** | | |
| **47.0** | **D** | **10** | **T322D476K010AS** | **3.8** | **6** | **CX05F476K** | **T323D476K010AS** |
| **47.0** | **D** | **20** | **T322D476M010AS** | **3.8** | **6** | **CX05F476M** | **T323D476M010AS** |
| 56.0 | E | 5,10,20 | T322E566(1)010AS | 4.4 | 6 | | |
| **68.0** | **E** | **5,10,20** | **T322E686(1)010AS** | **5.0** | **6** | | |
| 82.0 | E | 5,10,20 | T322E826(1)010AS | 5.0 | 8 | | |
| **100.0** | **E** | **5,10,20** | **T322E107(1)010AS** | **8.0** | **8** | | |
| 120.0 | E | 5,10,20 | T322E127(1)010AS | 9.6 | 8 | | |
| **150.0** | **E** | **5,10,20** | **T322E157(1)010AS** | **10.0** | **8** | | |
| 180.0 | F | 5,10,20 | T322F187(1)010AS | 10.0 | 8 | | |
| **220.0** | **F** | **5,10,20** | **T322F227(1)010AS** | **10.0** | **8** | | |
| **15 VOLT RATING AT 85°C — 10 VOLT RATING AT 125°C** | | | | | | | |
| **1.5** | **A** | **5,10,20** | **T322A155(1)015AS** | **0.5** | **4** | | |
| 1.8 | A | 5,10,20 | T322A185(1)015AS | 0.5 | 4 | | |
| **2.2** | **A** | **5** | **T322A225J015AS** | **0.5** | **4** | | |
| **2.2** | **A** | **10** | **T322A225K015AS** | **0.5** | **4** | **CX05H225K** | **T323A225K015AS** |
| **2.2** | **A** | **20** | **T322A225M015AS** | **0.5** | **4** | **CX05H225M** | **T323A225M015AS** |
| 2.7 | B | 5,10,20 | T322B275(1)015AS | 0.5 | 4 | | |
| **3.3** | **B** | **5,10,20** | **T322B335(1)015AS** | **0.5** | **4** | | |
| 3.9 | B | 5,10,20 | T322B395(1)015AS | 0.5 | 4 | | |
| **4.7** | **B** | **5,10,20** | **T322B475(1)015AS** | **0.6** | **4** | | |
| 5.6 | B | 5,10,20 | T322B565(1)015AS | 0.7 | 4 | | |
| **6.8** | **B** | **5** | **T322B685J015AS** | **0.8** | **6** | | |
| **6.8** | **B** | **10** | **T322B685K015AS** | **0.8** | **6** | **CX05H685K** | **T323B685K015AS** |
| **6.8** | **B** | **20** | **T322B685M015AS** | **0.8** | **6** | **CX05H685M** | **T323B685M015AS** |
| 8.2 | C | 5,10,20 | T322C825(1)015AS | 1.0 | 6 | | |
| **10.0** | **C** | **5,10,20** | **T322C106(1)015AS** | **1.2** | **6** | | |
| 12.0 | C | 5,10,20 | T322C126(1)015AS | 1.4 | 6 | | |
| **15.0** | **C** | **5** | **T322C156J015AS** | **1.5** | **6** | | |
| **15.0** | **C** | **10** | **T322C156K015AS** | **1.5** | **6** | **CX05H156K** | **T323C156K015AS** |
| **15.0** | **C** | **20** | **T322C156M015AS** | **1.5** | **6** | **CX05H156M** | **T323C156M015AS** |

(1) To complete KEMET Part Number, insert Capacitance Tolerance Symbol as follows: M — ±20%, K — ±10%, J — ±5%
**Bold Face** lines indicate preferred part types and values.

## RATINGS & PART NUMBER REFERENCE

| CAPACITANCE µF | CASE SIZE | CAPACITANCE TOLERANCE ±% | KEMET T322 SERIES: KEMET PART NUMBER | KEMET T322 SERIES: D.C. LEAKAGE µA@25°C | KEMET T322 SERIES: MAX. DISSIPATION FACTOR %@25°C, 120 HZ | CX01 & CXO5 CAPACITORS PER MIL-PRF-49137/1 & 5: MILITARY PART NUMBER | CX01 & CXO5 CAPACITORS PER MIL-PRF-49137/1 & 5: KEMET PART NUMBER |
|---|---|---|---|---|---|---|---|
| **15 VOLT RATING AT 85°C — 10 VOLT RATING AT 125°C (Cont'd)** | | | | | | | |
| 18.0 | D | 5,10,20 | T322D186(1)015AS | 2.2 | 6 | | |
| **22.0** | **D** | **5** | **T322D226J015AS** | **2.6** | **6** | | |
| **22.0** | **D** | **10** | **T322D226K015AS** | **2.6** | **6** | **CX05H226K** | **T323D226K015AS** |
| **22.0** | **D** | **20** | **T322D226M015AS** | **2.6** | **6** | **CX05H226M** | **T323D226M015AS** |
| 27.0 | D | 5,10,20 | T322D276(1)015AS | 3.2 | 6 | | |
| **33.0** | **D** | **5** | **T322D336J015AS** | **4.0** | **6** | | |
| **33.0** | **D** | **10** | **T322D336K015AS** | **4.0** | **6** | **CX05H336K** | **T323D336K015AS** |
| **33.0** | **D** | **20** | **T322D336M015AS** | **4.0** | **6** | **CX05H336M** | **T323E336M015AS** |
| 39.0 | E | 5,10,20 | T322E396(1)015AS | 4.7 | 6 | | |
| **47.0** | **E** | **5,10,20** | **T322E476(1)015AS** | **5.0** | **6** | | |
| **56.0** | **E** | **5,10,20** | **T322E566(1)015AS** | **6.7** | **6** | | |
| **68.0** | **E** | **5,10,20** | **T322E686(1)015AS** | **8.2** | **6** | | |
| 82.0 | E | 5,10,20 | T322E826(1)015AS | 9.8 | 8 | | |
| **100.0** | **E** | **5,10,20** | **T322E107(1)015AS** | **10.0** | **8** | | |
| 120.0 | F | 5,10,20 | T322F127(1)015AS | 10.0 | 8 | | |
| **150.0** | **F** | **5,10,20** | **T322F157(1)015AS** | **10.0** | **8** | | |
| **20 VOLT RATING AT 85°C — 13 VOLT RATING AT 125°C** | | | | | | | |
| **1.0** | **A** | **5,10,20** | **T322A105(1)020AS** | **0.5** | **4** | | |
| 1.2 | A | 5,10,20 | T322A125(1)020AS | 0.5 | 4 | | |
| **1.5** | **A** | **5** | **T322A155J020AS** | **0.5** | **4** | | |
| **1.5** | **A** | **10** | **T322A155K020AS** | **0.5** | **4** | **CX05J155K** | **T323A155K020AS** |
| **1.5** | **A** | **20** | **T322A155M020AS** | **0.5** | **4** | **CX05J155M** | **T323A155M020AS** |
| 1.8 | B | 5,10,20 | T322B185(1)020AS | 0.5 | 4 | | |
| **2.2** | **B** | **5,10,20** | **T322B225(1)020AS** | **0.5** | **4** | | |
| 2.7 | B | 5,10,20 | T322B275(1)020AS | 0.5 | 4 | | |
| **3.3** | **B** | **5,10,20** | **T322B335(1)020AS** | **0.5** | **4** | | |
| 3.9 | B | 5,10,20 | T322B395(1)020AS | 0.6 | 4 | | |
| **4.7** | **B** | **5** | **T322B475J020AS** | **0.8** | **4** | | |
| **4.7** | **B** | **10** | **T322B475K020AS** | **0.8** | **4** | **CX05J475K** | **T323B475K020AS** |
| **4.7** | **B** | **20** | **T322B475M020AS** | **0.8** | **4** | **CX05J475M** | **T323B475M020AS** |
| 5.6 | C | 5,10,20 | T322C565(1)020AS | 0.9 | 4 | | |
| 6.8 | C | 5,10,20 | T322C685(1)020AS | 1.1 | 6 | | |
| 8.2 | C | 5,10,20 | T322C825(1)020AS | 1.3 | 6 | | |
| **10.0** | **C** | **5,10,20** | **T322C106(1)020AS** | **1.6** | **6** | | |
| 12.0 | D | 5 | T322D126J020AS | 1.9 | 6 | | |
| 12.0 | D | 10 | T322D126K020AS | 1.9 | 6 | CX05J126K | T323D126K020AS |
| 12.0 | D | 20 | T322D126M020AS | 1.9 | 6 | CX05J126M | T323D126M020AS |
| **15.0** | **D** | **5** | **T322D156J020AS** | **2.4** | **6** | | |
| **15.0** | **D** | **10** | **T322D156K020AS** | **2.4** | **6** | **CX05J156K** | **T323D156K020AS** |
| **15.0** | **D** | **20** | **T322D156M020AS** | **2.4** | **6** | **CX05J156M** | **T323D156M020AS** |
| 18.0 | D | 5,10,20 | T322D186(1)020AS | 2.9 | 6 | | |
| **22.0** | **D** | **5,10,20** | **T322D226(1)020AS** | **3.5** | **6** | | |
| 27.0 | E | 5,10,20 | T322E276(1)020AS | 4.3 | 6 | | |
| **33.0** | **E** | **5,10,20** | **T322E336(1)020AS** | **5.0** | **6** | | |
| 39.0 | E | 5,10,20 | T322E396(1)020AS | 6.2 | 6 | | |
| **47.0** | **E** | **5,10,20** | **T322E476(1)020AS** | **7.5** | **6** | | |
| 56.0 | E | 5,10,20 | T322E566(1)020AS | 8.9 | 6 | | |
| **68.0** | **E** | **5,10,20** | **T322E686(1)020AS** | **10.0** | **6** | | |
| 82.0 | F | 5,10,20 | T322F826(1)020AS | 10.0 | 8 | | |
| **100.0** | **F** | **5,10,20** | **T322F107(1)020AS** | **10.0** | **8** | | |
| **25 VOLT RATING AT 85°C — 17 VOLT RATING AT 125°C** | | | | | | | |
| **0.47** | **A** | **5,10,20** | **T322A474(1)025AS** | **0.5** | **3** | | |
| 0.56 | A | 5,10,20 | T322A564(1)025AS | 0.5 | 3 | | |
| **0.68** | **A** | **5,10,20** | **T322A684(1)025AS** | **0.5** | **3** | | |
| 0.82 | A | 5,10,20 | T322A824(1)025AS | 0.5 | 3 | | |
| **1.0** | **A** | **5** | **T322A105J025AS** | **0.5** | **3** | | |
| **1.0** | **A** | **10** | **T322A105K025AS** | **0.5** | **3** | **CX05K105K** | **T323A105K025AS** |
| **1.0** | **A** | **20** | **T322A105M025AS** | **0.5** | **3** | **CX05K105M** | **T323A105M025AS** |
| 1.2 | B | 5,10,20 | T322B125(1)025AS | 0.5 | 3 | | |
| **1.5** | **B** | **5** | **T322B155J025AS** | **0.5** | **3** | | |
| **1.5** | **B** | **10** | **T322B155K025AS** | **0.5** | **3** | **CX01K155K** | **T323B155K025AS** |
| **1.5** | **B** | **20** | **T322B155M025AS** | **0.5** | **3** | **CX01K155M** | **T323B155M020AS** |
| 1.8 | B | 5 | T322B185J025AS | 0.5 | 3 | | |
| 1.8 | B | 10 | T322B185K025AS | 0.5 | 3 | CX01K185K | T323B185K025AS |
| 1.8 | B | 20 | T322B185M025AS | 0.5 | 3 | CX01K185M | T323B185M025AS |
| **2.2** | **B** | **5** | **T322B225J025AS** | **0.5** | **3** | | |
| **2.2** | **B** | **10** | **T322B225K025AS** | **0.5** | **3** | **CX05K225K** | **T323B225K025AS** |

(1) To complete KEMET Part Number, insert Capacitance Tolerance Symbol as follows: M — ±20%, K — ±10%, J — ±5%
**Bold Face** lines indicate preferred part types and values.

## RATINGS & PART NUMBER REFERENCE

| CAPACITANCE µF | CASE SIZE | CAPACITANCE TOLERANCE ±% | KEMET T322 SERIES: KEMET PART NUMBER | KEMET T322 SERIES: D.C. LEAKAGE µA@25°C | KEMET T322 SERIES: MAX. DISSIPATION FACTOR %@25°C, 120 HZ | CX01 & CX05 CAPACITORS PER MIL-PRF-49137/1 & 5: MILITARY PART NUMBER | CX01 & CX05 CAPACITORS PER MIL-PRF-49137/1 & 5: KEMET PART NUMBER |
|---|---|---|---|---|---|---|---|
| **25 VOLT RATING AT 85°C — 17 VOLT RATING AT 125°C (Cont'd)** | | | | | | | |
| **2.2** | **B** | **20** | **T322B225M025AS** | **0.5** | **3** | **CX01/5K225M** | **T323B225M025AS** |
| 2.7 | B | 5,10,20 | T322B275(1)025AS | 0.5 | 3 | | |
| **3.3** | **B** | **5** | **T322B335J025AS** | **0.7** | **3** | | |
| **3.3** | **B** | **10** | **T322B335K025AS** | **0.7** | **3** | **CX05K335K** | **T323B335K025AS** |
| **3.3** | **B** | **20** | **T322B335M025AS** | **0.7** | **3** | **CX05K335M** | **T323B335M025AS** |
| 3.9 | C | 5,10,20 | T322C395(1)025AS | 0.8 | 3 | | |
| **4.7** | **C** | **5,10,20** | **T322C475(1)025AS** | **0.9** | **4** | | |
| 5.6 | C | 5,10,20 | T322C565(1)025AS | 1.1 | 4 | | |
| **6.8** | **C** | **5** | **T322C685J025AS** | **1.4** | **4** | | |
| **6.8** | **C** | **10** | **T322C685K025AS** | **1.4** | **4** | **CX05K685K** | **T323C685K025AS** |
| **6.8** | **C** | **20** | **T322C685M025AS** | **1.4** | **4** | **CX05K685M** | **T323C685M025AS** |
| 8.2 | C | 5,10,20 | T322C825(1)025AS | 1.5 | 4 | | |
| 10.0 | C | 5 | T322C106J025AS | 1.5 | 4 | | |
| 10.0 | C | 10 | T322C106K025AS | 1.5 | 4 | CX05K106K | T323C106K025AS |
| 10.0 | C | 20 | T322C106M025AS | 1.5 | 4 | CX05K106M | T323C106M025AS |
| 12.0 | D | 5,10,20 | T322D126(1)025AS | 2.4 | 4 | | |
| **15.0** | **D** | **5,10,20** | **T322D156(1)025AS** | **3.0** | **4** | | |
| 18.0 | E | 5,10,20 | T322E186(1)025AS | 3.6 | 6 | | |
| **22.0** | **E** | **5,10,20** | **T322E226(1)025AS** | **4.4** | **6** | | |
| 27.0 | E | 5,10,20 | T322E276(1)025AS | 5.4 | 6 | | |
| **33.0** | **E** | **5,10,20** | **T322E336(1)025AS** | **6.6** | **6** | | |
| 39.0 | E | 5,10,20 | T322E396(1)025AS | 7.8 | 6 | | |
| **47.0** | **E** | **5,10,20** | **T322E476(1)025AS** | **9.4** | **6** | | |
| 56.0 | F | 5,10,20 | T322F566(1)025AS | 10.0 | 6 | | |
| **68.0** | **F** | **5,10,20** | **T322F686(1)025AS** | **10.0** | **6** | | |
| **35 VOLT RATING AT 85°C — 23 VOLT RATING AT 125°C** | | | | | | | |
| **0.1** | **A** | **5,10,20** | **T322A104(1)035AS** | **0.5** | **3** | | |
| 0.12 | A | 5,10,20 | T322A124(1)035AS | 0.5 | 3 | | |
| **0.15** | **A** | **5,10,20** | **T322A154(1)035AS** | **0.5** | **3** | | |
| 0.18 | A | 5,10,20 | T322A184(1)035AS | 0.5 | 3 | | |
| **0.22** | **A** | **5,10,20** | **T322A224(1)035AS** | **0.5** | **3** | | |
| 0.27 | A | 5,10,20 | T322A274(1)035AS | 0.5 | 3 | | |
| **0.33** | **A** | **5** | **T322A334J035AS** | **0.5** | **3** | | |
| **0.33** | **A** | **10** | **T322A334K035AS** | **0.5** | **3** | **CX05M334K** | **T323A334K035AS** |
| **0.33** | **A** | **20** | **T322A334M035AS** | **0.5** | **3** | **CX05M334M** | **T323A334M035AS** |
| 0.39 | A | 5,10,20 | T322A394(1)035AS | 0.5 | 3 | | |
| **0.47** | **A** | **5** | **T322A474J035AS** | **0.5** | **3** | | |
| **0.47** | **A** | **10** | **T322A474K035AS** | **0.5** | **3** | **CX05M474K** | **T323A474K035AS** |
| **0.47** | **A** | **20** | **T322A474M035AS** | **0.5** | **3** | **CX05M474M** | **T323A474M035AS** |
| 0.56 | B | 5 | T322B564J035AS | 0.5 | 3 | | |
| 0.56 | B | 10 | T322B564K035AS | 0.5 | 3 | CX01M564K | T323B564K035AS |
| 0.56 | B | 20 | T322B564M035AS | 0.5 | 3 | CX01M564M | T323B564M035AS |
| **0.68** | **B** | **5** | **T322B684J035AS** | **0.5** | **3** | | |
| **0.68** | **B** | **10** | **T322B684K035AS** | **0.5** | **3** | **CX01M684K** | **T323B684K035AS** |
| **0.68** | **B** | **20** | **T322B684M035AS** | **0.5** | **3** | **CX01M684M** | **T323B684M035AS** |
| 0.82 | B | 5 | T322B824J035AS | 0.5 | 3 | | |
| 0.82 | B | 10 | T322B824K035AS | 0.5 | 3 | CX01M824K | T323B824K035AS |
| 0.82 | B | 20 | T322B824M035AS | 0.5 | 3 | CX01M824M | T323B824M035AS |
| **1.0** | **B** | **5** | **T322B105J035AS** | **0.5** | **3** | | |
| **1.0** | **B** | **10** | **T322B105K035AS** | **0.5** | **3** | **CX01M105K** | **T323B105K035AS** |
| **1.0** | **B** | **20** | **T322B105M035AS** | **0.5** | **3** | **CX01M105M** | **T323B105M035AS** |
| 1.2 | B | 5 | T322B125J035AS | 0.5 | 3 | | |
| 1.2 | B | 10 | T322B125K035AS | 0.5 | 3 | CX01M125K | T323B125K035AS |
| 1.2 | B | 20 | T322B125M035AS | 0.5 | 3 | CX01M125M | T323B125M035AS |
| **1.5** | **B** | **5** | **T322B155J035AS** | **0.5** | **3** | | |
| **1.5** | **B** | **10** | **T322B155K035AS** | **0.5** | **3** | **CX05M155K** | **T323B155K035AS** |
| **1.5** | **B** | **20** | **T322B155M035AS** | **0.5** | **3** | **CX05M155M** | **T323B155M035AS** |
| 1.8 | C | 5,10,20 | T322C185(1)035AS | 0.5 | 3 | | |
| **2.2** | **C** | **5,10,20** | **T322C225(1)035AS** | **0.6** | **3** | | |
| 2.7 | C | 5,10,20 | T322C275(1)035AS | 0.8 | 3 | | |
| **3.3** | **C** | **5** | **T322C335J035AS** | **0.9** | **4** | | |
| **3.3** | **C** | **10** | **T322C335K035AS** | **0.9** | **4** | **CX05M335K** | **T323C335K035AS** |
| **3.3** | **C** | **20** | **T322C335M035AS** | **0.9** | **4** | **CX05M335M** | **T323C335M035AS** |
| 3.9 | C | 5 | T322C395J035AS | 1.1 | 4 | | |
| 3.9 | C | 10 | T322C395K035AS | 1.1 | 4 | CX05M395K | T323C395K035AS |
| 3.9 | C | 20 | T322C395M035AS | 1.1 | 4 | CX05M395M | T323C395M035AS |
| **4.7** | **C** | **5** | **T322C475J035AS** | **1.3** | **4** | | |
| **4.7** | **C** | **10** | **T322C475K035AS** | **1.3** | **4** | **CX05M475K** | **T323C475K035AS** |
| **4.7** | **C** | **20** | **T322C475M035AS** | **1.3** | **4** | **CX05M475M** | **T323C475M035AS** |

(1) To complete KEMET Part Number, insert Capacitance Tolerance Symbol as follows: M — ±20%, K — ±10%, J — ±5%
**Bold Face** lines indicate preferred part types and values.

## RATINGS & PART NUMBER REFERENCE

| CAPACITANCE µF | CASE SIZE | CAPACITANCE TOLERANCE ±% | KEMET T322 SERIES: KEMET PART NUMBER | KEMET T322 SERIES: D.C. LEAKAGE µA@25°C | KEMET T322 SERIES: MAX. DISSIPATION FACTOR %@25°C, 120 HZ | CX01 & CXO5 CAPACITORS PER MIL-PRF-49137/1 & 5: MILITARY PART NUMBER | CX01 & CXO5 CAPACITORS PER MIL-PRF-49137/1 & 5: KEMET PART NUMBER |
|---|---|---|---|---|---|---|---|
| **35 VOLT RATING AT 85°C — 23 VOLT RATING AT 125°C** | | | | | | | |
| 5.6 | D | 5,10,20 | T322D565(1)035AS | 1.6 | 4 | | |
| **6.8** | **D** | **5** | **T322D685J035AS** | **1.9** | **4** | | |
| **6.8** | **D** | **10** | **T322D685K035AS** | **1.9** | **4** | **CX05M685K** | **T323D685K035AS** |
| **6.8** | **D** | **20** | **T322D685M035AS** | **1.9** | **4** | **CX05M685M** | **T323D685M035AS** |
| 8.2 | D | 5,10,20 | T322D825(1)035AS | 2.3 | 4 | | |
| **10.0** | **D** | **5** | **T322D106J035AS** | **2.8** | **4** | | |
| **10.0** | **D** | **10** | **T322D106K035AS** | **2.8** | **4** | **CX05M106K** | **T323D106K035AS** |
| **10.0** | **D** | **20** | **T322D106M035AS** | **2.8** | **4** | **CX05M106M** | **T323D106M035AS** |
| 12.0 | E | 5,10,20 | T322E126(1)035AS | 3.3 | 4 | | |
| **15.0** | **E** | **5,10,20** | **T322E156(1)035AS** | **4.2** | **6** | | |
| 18.0 | E | 5,10,20 | T322E186(1)035AS | 5.0 | 6 | | |
| **22.0** | **E** | **5,10,20** | **T322E226(1)035AS** | **6.2** | **6** | | |
| 27.0 | E | 5,10,20 | T322E276(1)035AS | 7.5 | 6 | | |
| **33.0** | **E** | **5,10,20** | **T322E336(1)035AS** | **9.2** | **6** | | |
| 39.0 | F | 5,10,20 | T322F396(1)035AS | 10.0 | 6 | | |
| **47.0** | **F** | **5,10,20** | **T322F476(1)035AS** | **10.0** | **6** | | |
| **50 VOLT RATING AT 85°C — 33 VOLT RATING AT 125°C** | | | | | | | |
| **0.1** | **A** | **5** | **T322A104J050AS** | **0.5** | **3** | | |
| **0.1** | **A** | **10** | **T322A104K050AS** | **0.5** | **3** | **CX05N104K** | **T323A104K050AS** |
| **0.1** | **A** | **20** | **T322A104M050AS** | **0.5** | **3** | **CX05N104M** | **T323A104M050AS** |
| 0.12 | A | 5,10,20 | T322A124(1)050AS | 0.5 | 3 | | |
| **0.15** | **A** | **5** | **T322A154J050AS** | **0.5** | **3** | | |
| **0.15** | **A** | **10** | **T322A154K050AS** | **0.5** | **3** | **CX05N154K** | **T323A154K050AS** |
| **0.15** | **A** | **20** | **T322A154M050AS** | **0.5** | **3** | **CX05N154M** | **T323A154M050AS** |
| 0.18 | A | 5,10,20 | T322A184(1)050AS | 0.5 | 3 | | |
| **0.22** | **A** | **5** | **T322A224J050AS** | **0.5** | **3** | | |
| **0.22** | **A** | **10** | **T322A224K050AS** | **0.5** | **3** | **CX05N224K** | **T323A224K050AS** |
| **0.22** | **A** | **20** | **T322A224M050AS** | **0.5** | **3** | **CX05N224M** | **T323A224M050AS** |
| 0.27 | A | 5,10,20 | T322A274(1)050AS | 0.5 | 3 | | |
| **0.33** | **B** | **5** | **T322B334J050AS** | **0.5** | **3** | | |
| **0.33** | **B** | **10** | **T322B334K050AS** | **0.5** | **3** | **CX05N334K** | **T323B334K050AS** |
| **0.33** | **B** | **20** | **T322B334M050AS** | **0.5** | **3** | **CX05N334M** | **T323B334M050AS** |
| 0.39 | B | 5 | T322B394J050AS | 0.5 | 3 | | |
| 0.39 | B | 10 | T322B394K050AS | 0.5 | 3 | CX05N394K | T323B394K050AS |
| 0.39 | B | 20 | T322B394M050AS | 0.5 | 3 | CX05N394M | T323B394M050AS |
| **0.47** | **B** | **5** | **T322B474J050AS** | **0.5** | **3** | | |
| **0.47** | **B** | **10** | **T322B474K050AS** | **0.5** | **3** | **CX05N474K** | **T323B474K050AS** |
| **0.47** | **B** | **20** | **T322B474M050AS** | **0.5** | **3** | **CX05N474M** | **T323B474M050AS** |
| 0.56 | B | 5,10,20 | T322B564(1)050AS | 0.5 | 3 | | |
| **0.68** | **B** | **5** | **T322B684J050AS** | **0.5** | **3** | | |
| **0.68** | **B** | **10** | **T322B684K050AS** | **0.5** | **3** | **CX05N684K** | **T323B684K050AS** |
| **0.68** | **B** | **20** | **T322B684M050AS** | **0.5** | **3** | **CX05N684M** | **T323B684M050AS** |
| 0.82 | B | 5,10,20 | T322B824(1)050AS | 0.5 | 3 | | |
| **1.0** | **B** | **5** | **T322B105J050AS** | **0.5** | **3** | | |
| **1.0** | **B** | **10** | **T322B105K050AS** | **0.5** | **3** | **CX05N105K** | **T323B105K050AS** |
| **1.0** | **B** | **20** | **T322B105M050AS** | **0.5** | **3** | **CX05N105M** | **T323B105M050AS** |
| 1.2 | C | 5,10,20 | T322C125(1)050AS | 0.5 | 3 | | |
| **1.5** | **C** | **5** | **T322C155J050AS** | **0.6** | **4** | | |
| **1.5** | **C** | **10** | **T322C155K050AS** | **0.6** | **4** | **CX05N155K** | **T323C155K050AS** |
| **1.5** | **C** | **20** | **T322C155M050AS** | **0.6** | **4** | **CX05N155M** | **T323C155M050AS** |
| 1.8 | C | 5,10,20 | T322C185(1)050AS | 0.7 | 4 | | |
| **2.2** | **C** | **5** | **T322C225J050AS** | **0.9** | **4** | | |
| **2.2** | **C** | **10** | **T322C225K050AS** | **0.9** | **4** | **CX05N225K** | **T323C225K050AS** |
| **2.2** | **C** | **20** | **T322C225M050AS** | **0.9** | **4** | **CX05N225M** | **T323C225M050AS** |
| 2.7 | D | 5,10,20 | T322D275(1)050AS | 1.1 | 4 | | |
| **3.3** | **D** | **5** | **T322D335J050AS** | **1.3** | **4** | | |
| **3.3** | **D** | **10** | **T322D335K050AS** | **1.3** | **4** | **CX05N335K** | **T323D335K050AS** |
| **3.3** | **D** | **20** | **T322D335M050AS** | **1.3** | **4** | **CX05N335M** | **T323D335M050AS** |
| 3.9 | D | 5,10,20 | T322D395(1)050AS | 1.6 | 4 | | |
| **4.7** | **D** | **5** | **T322D475J050AS** | **1.9** | **4** | | |
| **4.7** | **D** | **10** | **T322D475K050AS** | **1.9** | **4** | **CX05N475K** | **T323D475K050AS** |
| **4.7** | **D** | **20** | **T322D475M050AS** | **1.9** | **4** | **CX05N475M** | **T323D475M050AS** |
| 5.6 | E | 5,10,20 | T322E565(1)050AS | 2.2 | 4 | | |
| **6.8** | **E** | **5,10,20** | **T322E685(1)050AS** | **2.7** | **4** | | |
| 8.2 | E | 5,10,20 | T322E825(1)050AS | 3.2 | 4 | | |
| **10.0** | **E** | **5,10,20** | **T322E106(1)050AS** | **4.0** | **6** | | |
| 12.0 | F | 5,10,20 | T322F126(1)050AS | 4.8 | 6 | | |
| **15.0** | **F** | **5,10,20** | **T322F156(1)050AS** | **6.0** | **6** | | |
| 18.0 | F | 5,10,20 | T322F186(1)050AS | 7.2 | 6 | | |
| **22.0** | **F** | **5,10,20** | **T322F226(1)050AS** | **8.8** | **6** | | |

(1) To complete KEMET Part Number, insert Capacitance Tolerance Symbol as follows: M — ±20%, K — ±10%, J — ±5%
**Bold Face** lines indicate preferred part types and values.

### T330 Series

KEMET T330 Series, polar-type, radial lead rectangular Precision Molded Tantalum (PMT) capacitors are primarily designed for applications that demand full use of the premium space available in printed circuitry and high density packaging. Compact, space saving T330 Series capacitors provide superior packing factor and space utilization compared with tubular units of the same microcoulomb (CV) rating.

T330 Series capacitors employ a rectangular sintered, dry tantalum anode, transfer molded in precision dies with a high impact resistant plastic having excellent electrical, physical, and moisture resistant properties. All cases utilize gold color plastic which permits laser marking with outstanding permanency and legibility. The polarity is indicated by a + sign permanently marked on the case. The radius on the two vertical edges at the positive end of B, C, and D Cases can be used as a sensing dimension for automatic insertion processes.

The location of the standoffs may serve a similar sensing function for the A Case. These standoffs, located in the base of all case sizes, provide vents for air circulation and also allow easy removal of flux residues from leadwire and circuit board solder joints.

T330 Series capacitors are highly reliable and exhibit performance characteristics typical of military test standards. They are available in capacitance values ranging from 0.1 to 220 microfarads in ±20, ±10, ±5% tolerance levels, and in working voltages from 6 to 50 volts. At 85°C the capacitors will operate continuously at full rated voltage. They are rated to 125°C when operated at 2/3 of nameplate voltage. In addition, they feature exceptionally low DC leakage and Dissipation Factor characteristics.

They are ideal for bypass, coupling, and timing applications in computers, military ordinance, industrial, entertainment, and consumer electronic equipment.

### T340 Series

The compact space saving T340 Series is transfer molded in precision dies with a high impact resistant plastic having excellent electrical, physical, and moisture resistant properties. The gold color plastic case utilized permits laser marking with outstanding permanency and legibility.

Marking is provided on the top of the case to allow visual inspection for proper polarity and placement after insertion. In addition, positive polarity identification is achieved by an easily recognized molded radius on the positive end of the case. This physical polarity identification is readily observed after capacitor placement as a further aid to the top marking in prevention of possible reverse insertion.

Standoffs, located in the base of all case sizes, provide vents for air circulation and also allow easy removal of flux residues from leadwire and circuit board solder joints. With very low impedance and ESR values, the T340 Series features exceptionally low DC leakage and DF characteristics. The T340 Series is available in standard ±20%; ±10%; ±5% (special order) capacitance tolerance.

T340 Series capacitors are highly reliable and exhibit performance characteristics typical of military test standards.

## PERFORMANCE CHARACTERISTICS

- CAPACITANCE/VOLTAGE RANGE:
  T330: 0.1-220µF, 6-50 Volts.
  T340: 0.1-330µF, 6-50 Volts.
- CAPACITANCE TOLERANCE: Available in standard EIA nominal values with ±20% tolerance standard, ±10% and ±5% available on special order.
- DISSIPATION FACTOR: Maximum DF limits are shown in corresponding series part number listing. See Application Notes Section, page 78.
- DC LEAKAGE CURRENT: Maximum leakage values at 25°C are shown in part number listings, pages 51, 52, 55, 56 and 57. See Application Notes Section, page 76.

**T330/T340 ESR (OHMS) at 100 kHz @ +25°C**
(The ESR values provided below are for reference only.
No warranty, as stated on page 3 and reincorporated here,is made as to
the accuracy of these values for any particular T330/T340 Series product.)

| Cap. µF | 6 Volt | 10 Volt | 15 Volt | 20 Volt | 25 Volt | 35 Volt | 50 Volt |
|---|---|---|---|---|---|---|---|
| 0.10 | | | | | | 26.0 | 26.0 |
| 0.15 | | | | | | 21.0 | 21.0 |
| 0.22 | | | | | | 17.0 | 17.0 |
| 0.33 | | | | | | 15.0 | 15.0 |
| 0.47 | | | | | | 13.0 | 13.0 |
| 0.68 | | | | | | 10.0 | 10.0 |
| 1.00 | | | | | | 8.0 | 8.0 |
| 1.50 | | | | | 8.0 | 6.0 | 5.0 |
| 2.20 | | | | 7.0 | 6.0 | 5.0 | 3.5 |
| 3.30 | | | 6.0 | 5.5 | 5.0 | 4.0 | 3.0 |
| 4.70 | | 8.0 | 5.0 | 4.5 | 4.0 | 3.0 | 2.5 |
| 6.80 | 8.0 | 6.0 | 4.0 | 3.6 | 3.1 | 2.5 | 2.0 |
| 10.0 | 6.0 | 5.0 | 3.2 | 2.9 | 2.5 | 2.0 | 1.6 |
| 15.0 | 5.0 | 3.7 | 2.5 | 2.3 | 2.0 | 1.6 | 1.2 |
| 22.0 | 3.7 | 2.7 | 2.0 | 1.8 | 1.5 | 1.3 | 1.0 |
| 33.0 | 3.0 | 2.1 | 1.6 | 1.4 | 1.2 | 1.0 | |
| 47.0 | 2.0 | 1.7 | 1.3 | 1.2 | 1.0 | 0.8 | |
| 68.0 | 1.8 | 1.3 | 1.0 | 0.9 | 0.8 | | |
| 100.0 | 1.6 | 1.0 | 0.8 | 0.6 | | | |
| 150.0 | 0.9 | 0.8 | 0.6 | | | | |
| 220.0 | 0.9 | 0.6 | | | | | |
| 330.0 | 0.7 | | | | | | |

- RATED VOLTAGE; WORKING VOLTAGE; SURGE VOLTAGE; REVERSE VOLTAGE: See Application Notes Section, pages 76 & 77 for description.
- IMPEDANCE and ESR: See Application Notes Section, page 77 & 78 for additional information. Reference ESR values are shown in table below.
- AC RIPPLE VOLTAGE: Permissible AC ripple voltage is related to ESR of the capacitor and the power dissipation capabilities of a particular case size. Thermal capacities for the various case sizes have been determined and are listed in Table below. For additional description see page 78.

| Series | Case Size | Watts |
|---|---|---|
| T330/T340 | A | .09 |
| | B | .09 |
| | C | .100 |
| T330 | D | .125 |
| T340 only | D/F | .125 |
| | E | .180 |

**Maximum Power Dissipation: 25°C Ambient**

- ENVIRONMENTAL CONSIDERATIONS:
  A. Shock Test: MIL-STD-202, Method 213.
  B. Thermal Shock, MIL-STD-202, Method 107.
  C. Moisture Resistance: MIL-STD-202, Method 106.
  D. Solderability: MIL-STD-202, Method 208.
  For additional Environmental Test Information see pages 80, 81 and 82.
- LEAD MATERIAL: Solder coated steel core with copper ply per MIL-STD-1276.
- LEAD TAPE and REEL: Reeling per specification RS-468. See pages 71 and 73 for additional information.

## CAPACITOR OUTLINE DRAWINGS

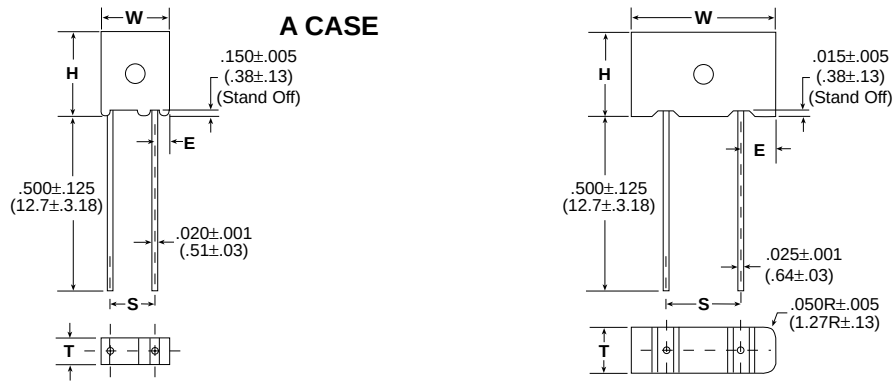


*Note:*
*On the "B" case size the stand off appears only between the two leadss*

## DIMENSIONS — INCHES & (MILLIMETERS)

| CASE SIZE | H CASE HEIGHT | W CASE WIDTH | T CASE THICKNESS | E CASE TO WIRE | S LEAD SPACING |
|---|---|---|---|---|---|
| A | .345 ± .008 (8.76 ± .203) | .230 ± .005 (5.84 ± .127) | .105 ± .005 (2.67 ± .127) | .050 ± .010 (1.27 ± .25) | .125 ± .005 (3.18 ± .127) |
| B | .225 ± .015 (5.71 ± 0.38) | .285 ± .015 (7.24 ± 0.38) | .170 ± .015 (4.32 ± 0.38) | .042 ± .010 (1.07 ± .25) | .200 ± .005 (5.08 ± .127) |
| C | .325 ± .015 (8.26 ± 0.38) | .325 ± .015 (8.26 ± 0.38) | .170 ± .015 (4.32 ± 0.38) | .062 ± .010 (1.57 ± 0.25) | .200 ± .005 (5.08 ± .127) |
| D | .375 ± .015 (9.53 ± 0.38) | .600 ± .015 (15.24 ± 0.38) | .195 ± .015 (4.95 ± 0.38) | .200 ± .010 (5.08 ± 0.25) | .200 ± .005 (5.08 ± .127) |

## ORDERING INFORMATION

**T 330 B 104 M 035 A S***

**TANTALUM**

**SERIES**
Radial Lead
Precision Molded Polar
Solid Tantalum

**CASE SIZE**
A / B / C / D

**PICOFARAD CODE**
First two digits are significant figures.
Third digit is the number of zeros following.

**LEAD MATERIAL**
S — Standard (Solder-Coated Nickel)

**FAILURE RATE LEVEL**
A — Not Applicable

**VOLTAGE RATING**

**CAP. TOLERANCE**
M — ±20% — Std.
K — ±10% — Std.
J — ±5% — Available on request

***Part Number Example: T330B104M035AS (14 digits – no spaces)**

## MARKING INFORMATION

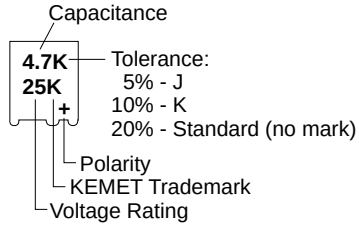

# RATINGS & PART NUMBER REFERENCE

## A CASE

| CAPACITANCE µF | CASE SIZE | KEMET PART NUMBER | D.C. LEAKAGE µA@25°C | MAX. DISSIPATION FACTOR %@25°C, 120Hz |
|---|---|---|---|---|
| **6 VOLT RATING AT 85°C — 4 VOLT RATING AT 125°C** | | | | |
| 18.0 | A | T330A186(1)006AS | 1 | 6 |
| **22.0** | **A** | **T330A226(1)006AS** | **1** | **6** |
| **10 VOLT RATING AT 85°C — 7 VOLT RATING AT 125°C** | | | | |
| **10.0** | **A** | **T330A106(1)010AS** | **1** | **6** |
| 12.0 | A | T330A126(1)010AS | 1 | 6 |
| 15.0 | A | T330A156(1)010AS | 1 | 6 |
| **15 VOLT RATING AT 85°C — 10 VOLT RATING AT 125°C** | | | | |
| 8.2 | A | T330A825(1)015AS | 1 | 6 |
| **20 VOLT RATING AT 85°C — 13 VOLT RATING AT 125°C** | | | | |
| 5.6 | A | T330A565(1)020AS | 1 | 6 |
| **6.8** | **A** | **T330A685(1)020AS** | **1** | **6** |
| **25 VOLT RATING AT 85°C — 17 VOLT RATING AT 125°C** | | | | |
| 3.3 | A | T330A335(1)025AS | 1 | 4 |
| 3.9 | A | T330A395(1)025AS | 1 | 4 |
| **4.7** | **A** | **T330A475(1)025AS** | **1** | |
| **35 VOLT RATING AT 85°C — 23 VOLT RATING AT 125°C** | | | | |
| 0.10 | A | T330A104(1)035AS | 1 | 3 |
| 0.12 | A | T330A124(1)035AS | 1 | 3 |
| 0.15 | A | T330A154(1)035AS | 1 | 3 |
| 0.18 | A | T330A184(1)035AS | 1 | 3 |
| 0.22 | A | T330A224(1)035AS | 1 | 3 |
| 0.27 | A | T330A274(1)035AS | 1 | 3 |
| 0.33 | A | T330A334(1)035AS | 1 | 3 |

| CAPACITANCE µF | CASE SIZE | KEMET PART NUMBER | D.C. LEAKAGE µA@25°C | MAX. DISSIPATION FACTOR %@25°C, 120Hz |
|---|---|---|---|---|
| **35 VOLT RATING AT 85°C — 23 VOLT RATING AT 125°C** | | | | |
| 0.39 | A | T330A394(1)035AS | 1 | 3 |
| 0.47 | A | T330A474(1)035AS | 1 | 3 |
| 0.56 | A | T330A564(1)035AS | 1 | 3 |
| 0.68 | A | T330A684(1)035AS | 1 | 3 |
| 0.82 | A | T330A824(1)035AS | 1 | 3 |
| **1.0** | **A** | **T330A105(1)035AS** | **1** | **3** |
| 1.2 | A | T330A125(1)035AS | 1 | 4 |
| 1.5 | A | T330A155(1)035AS | 1 | 4 |
| 1.8 | A | T330A185(1)035AS | 1 | 4 |
| 2.2 | A | T330A225(1)035AS | 1 | 4 |
| **2.7** | **A** | **T330A275(1)035AS** | **1** | **4** |
| **50 VOLT RATING AT 85°C — 33 VOLT RATING AT 125°C** | | | | |
| 0.10 | A | T330A104(1)050AS | 1 | 3 |
| 0.12 | A | T330A124(1)050AS | 1 | 3 |
| 0.15 | A | T330A154(1)050AS | 1 | 3 |
| 0.18 | A | T330A184(1)050AS | 1 | 3 |
| 0.22 | A | T330A224(1)050AS | 1 | 3 |
| 0.27 | A | T330A274(1)050AS | 1 | 3 |
| 0.33 | A | T330A334(1)050AS | 1 | 3 |
| 0.39 | A | T330A394(1)050AS | 1 | 3 |
| 0.47 | A | T330A474(1)050AS | 1 | 3 |
| 0.56 | A | T330A564(1)050AS | 1 | 3 |
| 0.68 | A | T330A684(1)050AS | 1 | 3 |
| 0.82 | A | T330A824(1)050AS | 1 | 4 |
| 1.0 | A | T330A105(1)050AS | 1 | 4 |
| 1.2 | A | T330A125(1)050AS | 1 | 4 |
| 1.5 | A | T330A155(1)050AS | 1 | 4 |

## B, C & D CASES

| CAPACITANCE µF | CASE SIZE | KEMET PART NUMBER | D.C. LEAKAGE µA@25°C | MAX. DISSIPATION FACTOR %@25°C, 120Hz |
|---|---|---|---|---|
| **6 VOLT RATING AT 85°C — 4 VOLT RATING AT 125°C** | | | | |
| 10.0 | B | T330B106(1)006AS | 1 | 6 |
| 12.0 | B | T330B126(1)006AS | 1 | 6 |
| 15.0 | B | T330B156(1)006AS | 1 | 6 |
| 18.0 | B | T330B186(1)006AS | 1 | 6 |
| 22.0 | B | T330B226(1)006AS | 1 | 6 |
| 27.0 | C | T330C276(1)006AS | 1 | 6 |
| 33.0 | C | T330C336(1)006AS | 1 | 6 |
| 39.0 | C | T330C396(1)006AS | 1 | 6 |
| 47.0 | C | T330C476(1)006AS | 2 | 6 |
| 56.0 | C | T330C566(1)006AS | 5 | 6 |
| 68.0 | C | T330C686(1)006AS | 5 | 6 |
| 82.0 | D | T330D826(1)006AS | 5 | 6 |
| 100.0 | D | T330D107(1)006AS | 5 | 6 |
| 120.0 | D | T330D127(1)006AS | 5 | 6 |
| 150.0 | D | T330D157(1)006AS | 5 | 6 |
| 180.0 | D | T330D187(1)006AS | 10 | 6 |
| 220.0 | D | T330D227(1)006AS | 10 | 8 |
| **10 VOLT RATING AT 85°C — 7 VOLT RATING AT 125°C** | | | | |
| 5.6 | B | T330B565(1)010AS | 1 | 6 |
| 6.8 | B | T330B685(1)010AS | 1 | 6 |
| 8.2 | B | T330B825(1)010AS | 1 | 6 |
| 10.0 | B | T330B106(1)010AS | 1 | 6 |
| 12.0 | B | T330B126(1)010AS | 1 | 6 |
| 15.0 | B | T330B156(1)010AS | 1 | 6 |
| 18.0 | C | T330C186(1)010AS | 1 | 6 |
| 22.0 | C | T330C226(1)010AS | 2 | 6 |
| 27.0 | C | T330C276(1)010AS | 2 | 6 |

| CAPACITANCE µF | CASE SIZE | KEMET PART NUMBER | D.C. LEAKAGE µA@25°C | MAX. DISSIPATION FACTOR %@25°C, 120Hz |
|---|---|---|---|---|
| **10 VOLT RATING AT 85°C — 7 VOLT RATING AT 125°C** | | | | |
| 33.0 | C | T330C336(1)010AS | 2 | 6 |
| 39.0 | C | T330C396(1)010AS | 5 | 6 |
| 47.0 | D | T330D476(1)010AS | 5 | 6 |
| 56.0 | D | T330D566(1)010AS | 5 | 6 |
| 68.0 | D | T330D686(1)010AS | 5 | 6 |
| 82.0 | D | T330D826(1)010AS | 5 | 6 |
| 100.0 | D | T330D107(1)010AS | 10 | 6 |
| 120.0 | D | T330D127(1)010AS | 10 | 6 |
| 150.0 | D | T330D157(1)010AS | 10 | 6 |
| **15 VOLT RATING AT 85°C — 10 VOLT RATING AT 125°C** | | | | |
| 3.9 | B | T330B395(1)015AS | 1 | 6 |
| 4.7 | B | T330B475(1)015AS | 1 | 6 |
| 5.6 | B | T330B565(1)015AS | 1 | 6 |
| 6.8 | B | T330B685(1)015AS | 1 | 6 |
| 8.2 | B | T330B825(1)015AS | 1 | 6 |
| 10.0 | C | T330C106(1)015AS | 1 | 6 |
| 12.0 | C | T330C126(1)015AS | 1 | 6 |
| 15.0 | C | T330C156(1)015AS | 2 | 6 |
| 18.0 | C | T330C186(1)015AS | 5 | 6 |
| 22.0 | C | T330C226(1)015AS | 5 | 6 |
| 27.0 | C | T330C276(1)015AS | 5 | 6 |
| 33.0 | C | T330C336(1)015AS | 5 | 6 |
| 39.0 | D | T330D396(1)015AS | 10 | 6 |
| 47.0 | D | T330D476(1)015AS | 10 | 6 |
| 56.0 | D | T330D566(1)015AS | 10 | 6 |
| 68.0 | D | T330D686(1)015AS | 10 | 6 |
| 82.0 | D | T330D826(1)015AS | 10 | 6 |

(1) To complete Part Number insert Capacitance Tolerance Symbol in the 9th character, M — ±20%, K — ±10%, J — ±5%.
**Bold face** lines indicate popular part types and values.
Higher voltage and better capacitance tolerance product may be substituted for an order within the same case size at KEMET'S option.

### B, C & D CASES (Cont'd)

| CAPAC-ITANCE µF | CASE SIZE | KEMET PART NUMBER | D.C. LEAKAGE µA@25°C | MAX. DISSIPATION FACTOR %@25°C, 120Hz |
|---|---|---|---|---|
| **25 VOLT RATING AT 85°C — 17 VOLT RATING AT 125°C** | | | | |
| 2.7 | B | T330B275(1)025AS | 1 | 6 |
| 3.3 | B | T330B335(1)025AS | 1 | 6 |
| 3.9 | B | T330B395(1)025AS | 1 | 6 |
| 4.7 | B | T330B475(1)025AS | 1 | 6 |
| 5.6 | C | T330C565(1)025AS | 1 | 6 |
| 6.8 | C | T330C685(1)025AS | 1 | 6 |
| 8.2 | C | T330C825(1)025AS | 1 | 6 |
| 10.0 | C | T330C106(1)025AS | 1 | 6 |
| 12.0 | C | T330C126(1)025AS | 1 | 6 |
| 15.0 | C | T330C156(1)025AS | 2 | 6 |
| 18.0 | D | T330D186(1)025AS | 5 | 6 |
| 22.0 | D | T330D226(1)025AS | 5 | 6 |
| 27.0 | D | T330D276(1)025AS | 5 | 6 |
| 33.0 | D | T330D336(1)025AS | 5 | 6 |
| 39.0 | D | T330D396(1)025AS | 10 | 6 |
| **47.0** | **D** | **T330D476(1)025AS** | **10** | **6** |
| **35 VOLT RATING AT 85°C—23 VOLT RATING AT 125°C** | | | | |
| 0.10 | B | T330B104(1)035AS | 1 | 6 |
| 0.12 | B | T330B124(1)035AS | 1 | 6 |
| 0.15 | B | T330B154(1)035AS | 1 | 6 |
| 0.18 | B | T330B184(1)035AS | 1 | 6 |
| 0.22 | B | T330B224(1)035AS | 1 | 6 |
| 0.27 | B | T330B274(1)035AS | 1 | 6 |
| 0.33 | B | T330B334(1)035AS | 1 | 6 |
| 0.39 | B | T330B394(1)035AS | 1 | 6 |
| 0.47 | B | T330B474(1)035AS | 1 | 6 |
| 0.56 | B | T330B564(1)035AS | 1 | 6 |
| 0.68 | B | T330B684(1)035AS | 1 | 6 |
| 0.82 | B | T330B824(1)035AS | 1 | 6 |
| 1.0 | B | T330B105(1)035AS | 1 | 6 |
| 1.2 | B | T330B125(1)035AS | 1 | 6 |
| 1.5 | B | T330B155(1)035AS | 1 | 6 |
| 1.8 | B | T330B185(1)035AS | 1 | 6 |
| 2.2 | B | T330B225(1)035AS | 1 | 6 |
| 2.7 | B | T330B275(1)035AS | 1 | 6 |
| 3.3 | B | T330B335(1)035AS | 1 | 6 |
| 3.9 | C | T330C395(1)035AS | 1 | 6 |
| 4.7 | C | T330C475(1)035AS | 1 | 6 |
| 5.6 | C | T330C565(1)035AS | 1 | 6 |

| CAPAC-ITANCE µF | CASE SIZE | KEMET PART NUMBER | D.C. LEAKAGE µA@25°C | MAX. DISSIPATION FACTOR %@25°C, 120Hz |
|---|---|---|---|---|
| **35 VOLT RATING AT 85°C — 23 VOLT RATING AT 125°C** | | | | |
| 6.8 | C | T330C685(1)035AS | 2 | 6 |
| 8.2 | C | T330C825(1)035AS | 5 | 6 |
| **10.0** | **C** | **T330C106(1)035AS** | **5** | **6** |
| 12.0 | D | T330D126(1)035AS | 5 | 6 |
| 15.0 | D | T330D156(1)035AS | 5 | 6 |
| 18.0 | D | T330D186(1)035AS | 10 | 6 |
| 22.0 | D | T330D226(1)035AS | 10 | 6 |
| 27.0 | D | T330D276(1)035AS | 10 | 6 |
| 33.0 | D | T330D336(1)035AS | 10 | 6 |
| **50 VOLT RATING AT 85°C—33 VOLT RATING AT 125°C** | | | | |
| 0.10 | B | T330B104(1)050AS | 1 | 6 |
| 0.12 | B | T330B124(1)050AS | 1 | 6 |
| 0.15 | B | T330B154(1)050AS | 1 | 6 |
| 0.18 | B | T330B184(1)050AS | 1 | 6 |
| 0.22 | B | T330B224(1)050AS | 1 | 6 |
| 0.27 | B | T330B274(1)050AS | 1 | 6 |
| 0.33 | B | T330B334(1)050AS | 1 | 6 |
| 0.39 | B | T330B394(1)050AS | 1 | 6 |
| 0.47 | B | T330B474(1)050AS | 1 | 6 |
| 0.56 | B | T330B564(1)050AS | 1 | 6 |
| 0.68 | B | T330B684(1)050AS | 1 | 6 |
| 0.82 | B | T330B824(1)050AS | 1 | 6 |
| 1.0 | B | T330B105(1)050AS | 1 | 6 |
| 1.2 | B | T330B125(1)050AS | 1 | 6 |
| 1.5 | B | T330B155(1)050AS | 1 | 6 |
| 1.8 | B | T330B185(1)050AS | 1 | 6 |
| 2.2 | B | T330B225(1)050AS | 1 | 6 |
| 2.7 | C | T330C275(1)050AS | 1 | 6 |
| 3.3 | C | T330C335(1)050AS | 2 | 6 |
| 3.9 | C | T330C395(1)050AS | 5 | 6 |
| 4.7 | C | T330C475(1)050AS | 5 | 6 |
| 5.6 | C | T330C565(1)050AS | 5 | 6 |
| 6.8 | D | T330D685(1)050AS | 5 | 6 |
| 8.2 | D | T330D825(1)050AS | 5 | 6 |
| 10.0 | D | T330D106(1)050AS | 5 | 6 |
| 12.0 | D | T330D126(1)050AS | 5 | 6 |
| 15.0 | D | T330D156(1)050AS | 10 | 6 |
| 18.0 | D | T330D186(1)050AS | 10 | 6 |

(1) To complete Part Number insert Capacitance Tolerance Symbol in the 9th character, M — ±20%, K — ±10%, J — ±5%.
**Bold face** lines indicate popular part types and values.
Higher voltage and better capacitance tolerance product may be substituted for an order within the same case size at KEMET'S option.

# TANTALUM MOLDED / RADIAL

## T340 SERIES - PRECISION MOLDED - RADIAL LEADS

**Effective September 30, 2005, the KEMET T340 Series is RoHS compliant.**

## CAPACITOR OUTLINE DRAWINGS

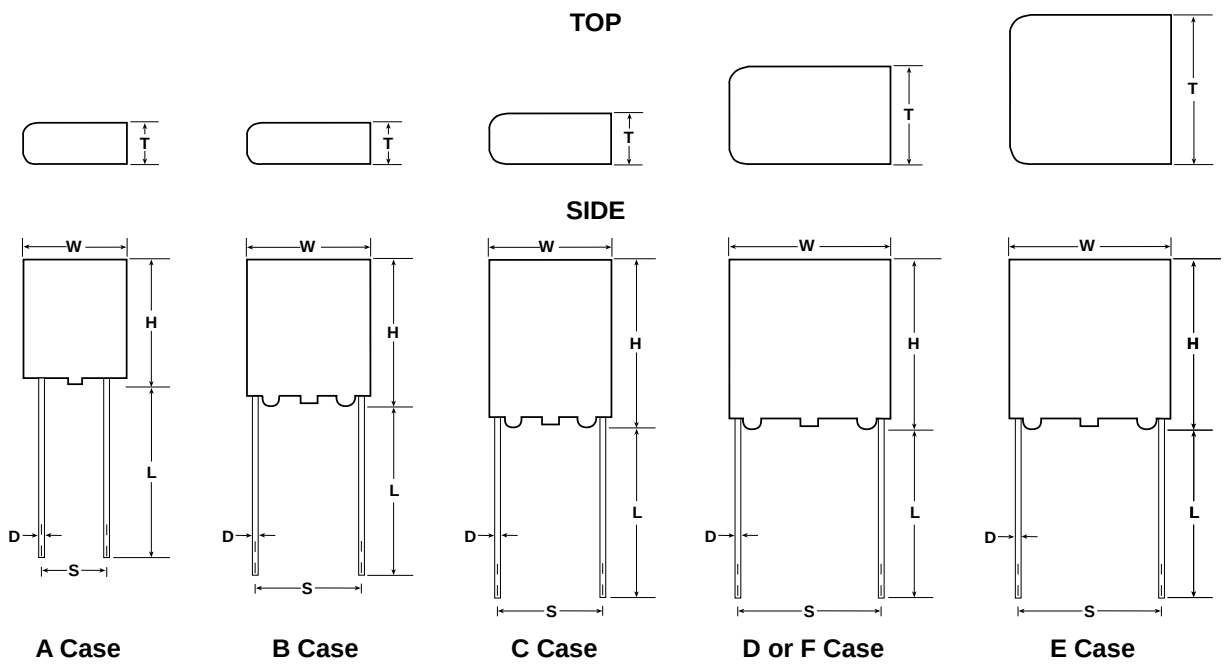


*F case size is the same as D, but with .200" (5.0 mm) lead spacing. Specify T340F when ordering this spacing.*

## DIMENSIONS — INCHES & MILLIMETERS

| CASE SIZE | H** (MAX) | | W (MAX) | | T (MAX) | | LEAD SPACING S | | LEAD LENGTH L | | LEAD DIAMETER D | |
|---|---|---|---|---|---|---|---|---|---|---|---|---|
| | H | | W | | T | | | | | | | |
| | Inches | mm | Inches | mm | inches | mm | Inches ±.020 | mm ±.5 | Inches ±.078 | mm ±2.0 | Inches ±.001 | mm ±.03 |
| A | **.287** | 7.3 | **.185** | 4.7 | **.165** | 4.2 | **.100** | 2.5 | **.600** | 15.0 | **.020** | 0.50 |
| B | **.327** | 8.3 | **.283** | 7.2 | **.157** | 4.0 | **.200** | 5.0 | **.600** | 15.0 | **.020** | 0.50 |
| C | **.413** | 10.5 | **.287** | 7.3 | **.169** | 4.3 | **.200** | 5.0 | **.600** | 15.0 | **.020** | 0.50 |
| D | **.413** | 10.5 | **.484** | 12.3 | **.287** | 7.3 | **.400** | 10.0 | **.600** | 15.0 | **.025** | 0.64 |
| E | **.413** | 10.5 | **.484** | 12.3 | **.484** | 12.3 | **.400** | 10.0 | **.600** | 15.0 | **.025** | 0.64 |
| F | **.413** | 10.5 | **.484** | 12.3 | **.287** | 7.3 | **.200** | 5.0 | **.600** | 15.0 | **.025** | 0.64 |

**Includes Standoff Height of .015 ± .005" (.38 ± .13 mm) for All Case Sizes.

## ORDERING INFORMATION

**T 340 A 105 M 035 A S***

**TANTALUM**

**SERIES**
Radial Lead
Precision Molded Polar
Solid Tantalum

**CASE SIZE**
A / B / C / D / E / F

**PICOFARAD CODE**
First two digits are significant figures.
Third digit is the number of zeros following.

**LEAD MATERIAL**
S — Standard (solder-coated copperweld)
T – 100% tin

**FAILURE RATE LEVEL**
A — Not Applicable

**VOLTAGE RATING**

**CAPACITANCE TOLERANCE**
M — ±20% — Std.
K — ±10%
J — ±5%
} Available on request

***Part Number Example: T340A105M035AS (14 digits – no spaces)**

## MARKING INFORMATION

### American

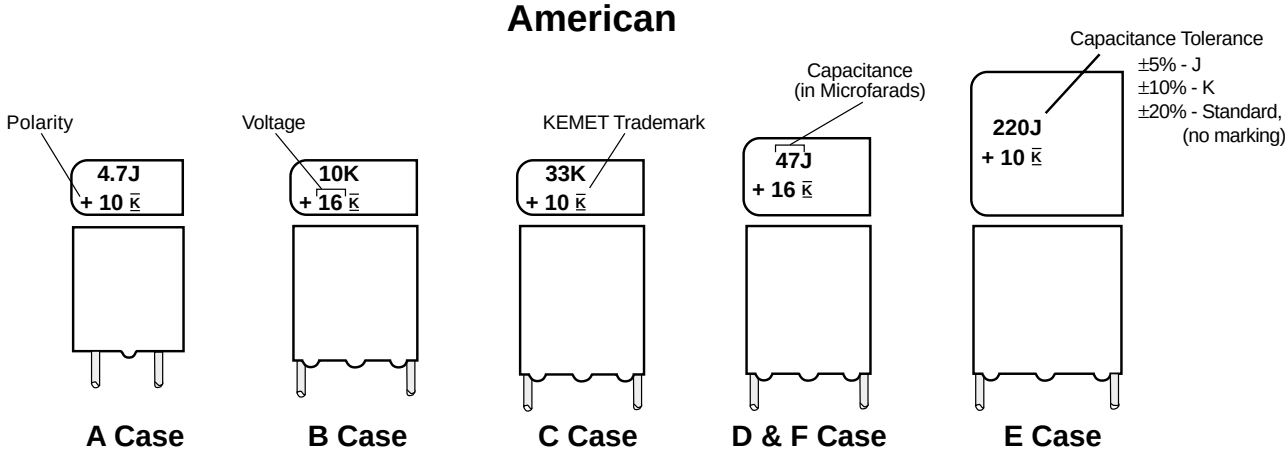


### European

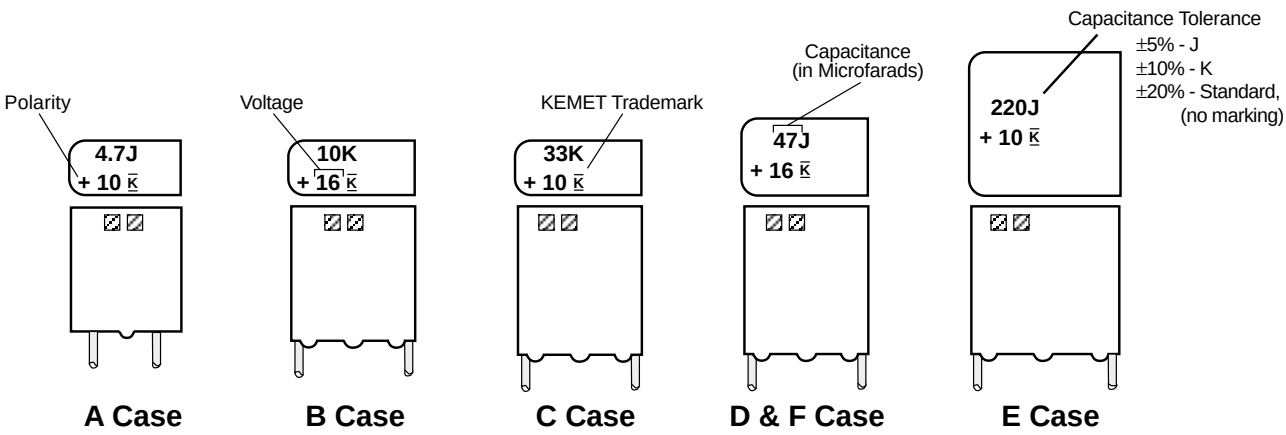


**□ □ = DIN. Specification Date Code**

Insert Date Code as follows:

□ 1st digit - represents year

| | |
|---|---|
| L - 2000 | Q- 2005 |
| M - 2001 | R - 2006 |
| N - 2002 | S - 2007 |
| O - 2003 | T - 2008 |
| P - 2004 | U - 2009 |

□ 2nd digit - represents month

1 - 9 for January - September
O for October
N for November
D for December


KEMET Electronics Corporation, P.O. Box 5928, Greenville, S.C. 29606 (864) 963-6300

## RATINGS & PART NUMBER REFERENCE

| CAPACI-ITANCE µF | CASE SIZE | KEMET PART NUMBER | MAX. DC LEAKAGE µA@25°C | MAX. DISSIPATION FACTOR %@25°C, 120 HZ | MAX. IMPEDANCE Ω@ 10 kHz |
|---|---|---|---|---|---|
| **3 VOLT RATING AT 85°C — 2 VOLT AT 125°C** | | | | | |
| 10.0 | A | T340A106(1)003AS | 1.0 | 6 | 6.0 |
| 15.0 | A | T340A156(1)003AS | 1.0 | 6 | 3.2 |
| 33.0 | B | T340B336(1)003AS | 1.5 | 6 | 2.1 |
| 47.0 | B | T340B476(1)003AS | 3.0 | 6 | 1.8 |
| 68.0 | C | T340C686(1)003AS | 4.0 | 6 | 1.5 |
| 100.0 | C | T340C107(1)003AS | 5.0 | 6 | 1.2 |
| **6/6.3 VOLT RATING AT 85°C — 4 VOLT AT 125°C** | | | | | |
| 6.8 | A | T340A685(1)006AS | 1.0 | 6 | 6.0 |
| 10.0 | B | T340B106(1)006AS | 1.0 | 6 | |
| 12.0 | B | T340B126(1)006AS | 1.0 | 6 | |
| 15.0 | B | T340B156(1)006AS | 1.0 | 6 | |
| 18.0 | B | T340B186(1)006AS | 1.0 | 6 | |
| 22.0 | B | T340B226(1)006AS | 2.5 | 6 | 2.1 |
| 27.0 | C | T340C276(1)006AS | 2.5 | 6 | |
| 33.0 | C | T340C336(1)006AS | 2.5 | 6 | |
| 39.0 | C | T340C396(1)006AS | 2.5 | 6 | |
| **47.0** | **C** | **T340C476(1)006AS** | **3.0** | **6** | **1.5** |
| 56.0 | C | T340C566(1)006AS | 5.0 | 6 | |
| 68.0 | C | T340C686(1)006AS | 5.0 | 6 | |
| 82.0 | D/F | T340(2)826(1)006AS | 5.0 | 6 | |
| 100.0 | D/F | T340(2)107(1)006AS | 5.0 | 6 | |
| 120.0 | D/F | T340(2)127(1)006AS | 5.0 | 6 | |
| 150.0 | D/F | T340(2)157(1)006AS | 8.0 | 6 | 0.8 |
| 180.0 | D/F | T340(2)187(1)006AS | 10.0 | 6 | |
| 220.0 | D/F | T340(2)227(1)006AS | 10.0 | 6 | |
| 330.0 | E | T340E337(1)006AS | 10.0 | 8 | 0.5 |
| **10 VOLT RATING AT 85°C — 6 VOLT AT 125°C** | | | | | |
| **4.7** | **A** | **T340A475(1)010AS** | **1.0** | **6** | **7.5** |
| 5.6 | B | T340B565(1)010AS | 1.0 | 6 | |
| 6.8 | B | T340B685(1)010AS | 1.0 | 6 | |
| 8.2 | B | T340B825(1)010AS | 1.0 | 6 | |
| 10.0 | B | T340B106(1)010AS | 1.0 | 6 | |
| 12.0 | B | T340B126(1)010AS | 1.0 | 6 | |
| 15.0 | B | T340B156(1)010AS | 3.0 | 6 | 2.5 |
| 18.0 | C | T340C186(1)010AS | 3.0 | 6 | |
| 22.0 | C | T340C226(1)010AS | 3.0 | 6 | |
| 27.0 | C | T340C276(1)010AS | 3.0 | 6 | |
| **33.0** | **C** | **T340C336(1)010AS** | **5.0** | **6** | **1.7** |
| 39.0 | C | T340C396(1)010AS | 5.0 | 6 | |
| 47.0 | D/F | T340(2)476(1)010AS | 5.0 | 6 | |
| 56.0 | D/F | T340(2)566(1)010AS | 5.0 | 6 | |
| 68.0 | D/F | T340(2)686(1)010AS | 5.0 | 6 | |
| 82.0 | D/F | T340(2)826(1)010AS | 8.0 | 6 | |
| **100.0** | **D/F** | **T340(2)107(1)010AS** | **10.0** | **6** | 1.0 |
| 120.0 | D/F | T340(2)127(1)010AS | 10.0 | 6 | |
| 150.0 | D/F | T340(2)157(1)010AS | 10.0 | 6 | |
| 220.0 | E | T340E227(1)010AS | 10.0 | 6 | 0.5 |
| **15/16 VOLT RATING AT 85°C — 10 VOLT AT 125°C** | | | | | |
| **3.3** | **A** | **T340A335(1)015AS** | **1.0** | **6** | **9.0** |
| 3.9 | B | T340B395(1)015AS | 1.0 | 6 | |
| 4.7 | B | T340B475(1)015AS | 1.0 | 6 | |
| 5.6 | B | T340B565(1)015AS | 1.0 | 6 | |
| 6.8 | B | T340B685(1)015AS | 1.0 | 6 | |
| 8.2 | B | T340B825(1)015AS | 1.0 | 6 | |
| **10.0** | **B** | **T340B106(1)015AS** | **3.0** | **6** | **3.2** |

(1) To complete KEMET Part Number, insert M — ±20%, K — ±10%, or J — ±5% for capacitance tolerance as shown in T340 ordering information.
(2) To complete KEMET Part Number, insert letter "D" for 10.0 mm (.394) lead spacing or letter "F" for 5.0 mm (.197) lead spacing. See page 53 for outline drawings.
**Bold face** lines indicate popular part types and values.
Higher voltage and better capacitance tolerance product may be substituted for an order within the same case size at KEMET'S option.

## RATINGS & PART NUMBER REFERENCE

| CAPAC-ITANCE µF | CASE SIZE | KEMET PART NUMBER | MAX. DC LEAKAGE µA@25°C | MAX. DISSIPATION FACTOR %@25°C, 120 HZ | MAX IMPEDANCE Ω@ 10 kHz |
|---|---|---|---|---|---|
| **15/16 VOLT RATING AT 85°C — 10 VOLT AT 125°C (Cont'd)** | | | | | |
| 12.0 | C | T340C126(1)015AS | 3.0 | 6 | |
| 15.0 | C | T340C156(1)015AS | 3.5 | 6 | 2.5 |
| 18.0 | C | T340C186(1)015AS | 4.0 | 6 | |
| **22.0** | **C** | **T340C226(1)015AS** | **4.0** | **6** | **2.1** |
| 27.0 | C | T340C276(1)015AS | 5.0 | 6 | |
| 33.0 | C | T340C336(1)015AS | 5.0 | 6 | |
| 39.0 | D/F | T340(2)396(1)015AS | 7.0 | 6 | |
| **47.0** | **D/F** | T340(2)476(1)015AS | **7.0** | **6** | **1.3** |
| 56.0 | D/F | T340(2)566(1)015AS | 8.0 | 6 | |
| **68.0** | **D/F** | **T340(2)686(1)015AS** | **9.0** | **6** | **1.1** |
| 82.0 | D/F | T340(2)826(1)015AS | 10.0 | 6 | |
| 100.0 | E | T340E107(1)015AS | 10.0 | 6 | 0.8 |
| **150.0** | **E** | **T340E157(1)015AS** | **10.0** | **6** | **0.6** |
| **20 VOLT RATING AT 85°C — 13 VOLT AT 125°C** | | | | | |
| 2.2 | A | T340A225(1)020AS | 1.0 | 6 | 12.0 |
| 3.3 | B | T340B335(1)020AS | 1.0 | 6 | 8.0 |
| 4.7 | B | T340B475(1)020AS | 1.5 | 6 | 5.5 |
| 6.8 | B | T340B685(1)020AS | 2.5 | 6 | 4.2 |
| 15.0 | C | T340C156(1)020AS | 5.0 | 6 | 2.5 |
| 47.0 | D | T340D476(1)020AS | 9.0 | 6 | 1.3 |
| 100.0 | E | T340E107(1)020AS | 10.0 | 6 | 0.8 |
| **25 VOLT RATING AT 85°C — 16 VOLT AT 125°C** | | | | | |
| **1.5** | **A** | **T340A155(1)025AS** | **1.0** | **6** | **17.0** |
| 2.7 | B | T340B275(1)025AS | 1.0 | 6 | |
| 3.3 | B | T340B335(1)025AS | 1.0 | 6 | |
| 3.9 | B | T340B395(1)025AS | 1.0 | 6 | |
| 4.7 | B | T340B475(1)025AS | 2.0 | 6 | 5.5 |
| 5.6 | C | T340C565(1)025AS | 2.0 | 6 | |
| 6.8 | C | T340C685(1)025AS | 3.0 | 6 | 4.2 |
| 8.2 | C | T340C825(1)025AS | 3.0 | 6 | |
| **10.0** | **C** | **T340C106(1)025AS** | **3.5** | **6** | **3.0** |
| 12.0 | C | T340C126(1)025AS | 3.5 | 6 | |
| 15.0 | C | T340C156(1)025AS | 4.0 | 6 | |
| 18.0 | D/F | T340(2)186(1)025AS | 5.0 | 6 | |
| 22.0 | D/F | T340(2)226(1)025AS | 5.5 | 6 | 2.0 |
| 27.0 | D/F | T340(2)276(1)025AS | 7.0 | 6 | |
| **33.0** | **D/F** | **T340(2)336(1)025AS** | **8.0** | **6** | **1.5** |
| 39.0 | D/F | T340(2)396(1)025AS | 10.0 | 6 | |
| 47.0 | D/E/F | T340(2)476(1)025AS | 10.0 | 6 | 1.3 |
| 68.0 | E | T340E686(1)025AS | 10.0 | 6 | 0.9 |
| **35 VOLT RATING AT 85°C — 23 VOLT AT 125°C** | | | | | |
| 0.1 | A | T340A104(1)035AS | 1.0 | 6 | 220.0 |
| 0.15 | A | T340A154(1)035AS | 1.0 | 6 | 150.0 |
| 0.22 | A | T340A224(1)035AS | 1.0 | 6 | 100.0 |
| 0.33 | A | T340A334(1)035AS | 1.0 | 6 | 75.0 |
| 0.47 | A | T340A474(1)035AS | 1.0 | 6 | 50.0 |
| 0.68 | A | T340A684(1)035AS | 1.0 | 6 | 36.0 |
| **1.0** | **A** | **T340A105(1)035AS** | **1.0** | **6** | **25.0** |
| 1.2 | B | T340B125(1)035AS | 1.0 | 6 | 15.0 |
| 1.5 | B | T340B155(1)035AS | 1.0 | 6 | |
| 1.8 | B | T340B185(1)035AS | 1.0 | 6 | |
| **2.2** | **B** | **T340B225(1)035AS** | **1.0** | **6** | **11.0** |
| 2.7 | B | T340B275(1)035AS | 1.0 | 6 | |
| 3.3 | B/C | T340(2)335(1)035AS | 1.0 | 6 | 7.5 |

(1) To complete KEMET Part Number, insert M — ±20%, K — ±10%, or J — ±5% for capacitance tolerance as shown in T340 ordering information.
(2) To complete KEMET Part Number, insert letter "C" for 5.0 mm (.197") lead spacing, "D" for 10.0 mm (.394") lead spacing, "E" for 10.0 mm (.394") lead spacing or "F" for 5.0 mm (.197") lead spacing. See page 53 for outline drawings.
**Bold face** lines indicate popular part types and values.
Higher voltage and better capacitance tolerance product may be substituted for an order within the same case size at KEMET'S option.

## RATINGS & PART NUMBER REFERENCE

| CAPACI-ITANCE µF | CASE SIZE | KEMET PART NUMBER | MAX. DC LEAKAGE µA@25°C | MAX. DISSIPATION FACTOR %@25°C, 120 HZ | MAX IMPEDANCE Ω@ 10 kHz |
|---|---|---|---|---|---|
| **35 VOLT RATING AT 85°C — 23 VOLT AT 125°C (Cont'd)** | | | | | |
| 3.9 | C | T340C395(1)035AS | 1.0 | 6 | |
| **4.7** | **C** | **T340C475(1)035AS** | **2.5** | **6** | **5.5** |
| 5.6 | C | T340C565(1)035AS | 2.5 | 6 | |
| **6.8** | **C** | **T340C685(1)035AS** | **3.0** | **6** | **4.2** |
| 8.2 | C | T340C825(1)035AS | 4.0 | 6 | |
| **10.0** | **C** | **T340(2)106(1)035AS** | **4.0** | **6** | **2.8** |
| 12.0 | D/F | T340(2)126(1)035AS | 5.0 | 6 | |
| 15.0 | D/F | T340(2)156(1)035AS | 5.0 | 6 | 2.2 |
| 18.0 | D/F | T340(2)186(1)035AS | 8.0 | 6 | |
| **22.0** | **D/F** | **T340(2)226(1)035AS** | **8.0** | **6** | **1.9** |
| 27.0 | D/F | T340(2)276(1)035AS | 10.0 | 6 | |
| 33.0 | D/E/F | T340(2)336(1)035AS | 10.0 | 6 | 1.4 |
| **47.0** | **E** | **T340E476(1)035AS** | **10.0** | **6** | **1.1** |
| **40 VOLT RATING AT 85°C — 32 VOLT AT 100°C** | | | | | |
| 0.1 | A | T340A104(1)040AS | 1.0 | 6 | 200.0 |
| 0.15 | A | T340A154(1)040AS | 1.0 | 6 | 140.0 |
| 0.22 | A | T340A224(1)040AS | 1.0 | 6 | 95.0 |
| 0.33 | A | T340A334(1)040AS | 1.0 | 6 | 70.0 |
| 0.47 | A | T340A474(1)040AS | 1.0 | 6 | 46.0 |
| 0.68 | A | T340A684(1)040AS | 1.0 | 6 | 34.0 |
| 1.0 | A | T340A105(1)040AS | 1.0 | 6 | 23.0 |
| 1.5 | B | T340B155(1)040AS | 1.0 | 6 | 14.0 |
| 2.2 | B | T340B225(1)040AS | 1.7 | 6 | 10.0 |
| 3.3 | C | T340C335(1)040AS | 2.3 | 6 | 7.0 |
| 4.7 | C | T340C475(1)040AS | 3.0 | 6 | 5.0 |
| 6.8 | C | T340C685(1)040AS | 3.5 | 6 | 3.9 |
| 10.0 | D | T340D106(1)040AS | 4.5 | 6 | 2.6 |
| 15.0 | D | T340D156(1)040AS | 6.0 | 6 | 2.0 |
| 22.0 | D | T340D226(1)040AS | 9.0 | 6 | 1.7 |
| 33.0 | E | T340E336(1)040AS | 10.0 | 6 | 1.3 |
| 47.0 | E | T340E476(1)040AS | 10.0 | 6 | 1.0 |
| **50 VOLT RATING AT 85°C — 33 VOLT AT 125°C** | | | | | |
| 0.1 | A | T340A104(1)050AS | 1.0 | 6 | 220.0 |
| 0.15 | A | T340A154(1)050AS | 1.0 | 6 | 150.0 |
| 0.22 | A | T340A224(1)050AS | 1.0 | 6 | 100.0 |
| 0.33 | A | T340A334(1)050AS | 1.0 | 6 | 75.0 |
| 0.39 | B | T340B394(1)050AS | 1.0 | 6 | |
| 0.47 | B | T340B474(1)050AS | 1.0 | 6 | 50.0 |
| 0.56 | B | T340B564(1)050AS | 1.0 | 6 | |
| 0.68 | B | T340B684(1)050AS | 1.0 | 6 | 36.0 |
| 0.82 | B | T340B824(1)050AS | 1.0 | 6 | |
| 1.0 | B | T340B105(1)050AS | 1.0 | 6 | 25.0 |
| 1.2 | B | T340B125(1)050AS | 1.0 | 6 | |
| 1.5 | B/C | T340(2)155(1)050AS | 1.1 | 6 | 15.0 |
| 1.8 | B | T340B185(1)050AS | 1.1 | 6 | |
| 2.2 | B/C | T340(2)225(1)050AS | 1.5 | 6 | 11.0 |
| 2.7 | C | T340C275(1)050AS | 1.5 | 6 | |
| 3.3 | C/D | T340(2)335(1)050AS | 2.5 | 6 | 7.5 |
| 3.9 | C | T340C395(1)050AS | 3.0 | 6 | |
| 4.7 | C/D | T340(2)475(1)050AS | 3.5 | 6 | 5.5 |
| 5.6 | C | T340C565(1)050AS | 4.0 | 6 | |
| 6.8 | D/F | T340(2)685(1)050AS | 5.0 | 6 | 4.0 |
| 8.2 | D/F | T340(2)825(1)050AS | 6.0 | 6 | |
| 10.0 | D/F | T340(2)106(1)050AS | 7.0 | 6 | 2.8 |
| 12.0 | D/F | T340(2)126(1)050AS | 8.0 | 6 | |
| 15.0 | D/F | T340(2)156(1)050AS | 9.0 | 6 | 2.2 |
| 18.0 | D/F | T340(2)186(1)050AS | 10.0 | 6 | |
| 22.0 | E | T340E226(1)050AS | 10.0 | 6 | 1.7 |

(1) To complete KEMET Part Number, insert M — ±20%, K — ±10%, or J — ±5% for capacitance tolerance as shown in T340 ordering information.
(2) To complete KEMET Part Number, insert letter "C" for 5.0 mm (.197") lead spacing, "D" for 10.0 mm (.394") lead spacing, "E" for 10.0 mm (.394") lead spacing or letter "F" for 5.0 mm (.197") lead spacing. See page 53 for outline drawings.
**Bold face** lines indicate popular part types and values.
Higher voltage and better capacitance tolerance product may be substituted for an order within the same case size at KEMET'S option.

The KEMET Micron Series is available in a variety of case styles and sizes. They are designed to operate from -55°C to +85°C at full voltage and to +125°C with derating. Typical applications include use in bypass coupling, filtering, and timing circuits.

The KEMET Micron Series is qualified under MIL-PRF-49137/6 as military styles CX06 (T378 Series).

The KEMET T370 Series is encapsulated in a molded gold color epoxy. This encasement technique allows maximum utilization of circuit board real estate with precisely centered leads in a microminiature case.

These molded packages also provide significant improvements in overall dimensional consistency as well as lead wires precisely spaced to within .010 inches (.25mm).

With our new molded packaging design, these capacitors can now be marked using our laser printing technique. The KEMET laser marking system ensures legibility and permanency while offering a complete alphanumeric print format. Laser print meets all requirements of the Resistance to Solvents Test, method 215 of MIL-STD-202.

## PERFORMANCE CHARACTERISTICS

- CAPACITANCE/VOLTAGE RANGE:
  T370 Series: 0.68-220µF, 3-35 Volts.
  T378 Series: 2.2-220µF, 3-35 Volts.

- CAPACITANCE TOLERANCE: Available in standard EIA nominal values with ±20% tolerance standard, +40% -20%, ±10% and ±5% are also available.

- DISSIPATION FACTOR: Maximum DF limits are shown in corresponding series part number listings on page 60. See Application Notes Section, page 76 for additional information.

- DC LEAKAGE CURRENT: Maximum leakage values at 25° are shown in part number listings, page 60. See Application Notes Section, page 76 for additional information.

- RATED VOLTAGE; WORKING VOLTAGE; SURGE VOLTAGE; REVERSE VOLTAGE: See Application Notes Section, pages 76 & 77 for description.

- IMPEDANCE and ESR: See Application Notes Section, pages 78 for description. Reference ESR values are listed in table below.

- AC RIPPLE VOLTAGE: Permissible AC ripple voltage is related to the ESR of the capacitor and the power dissipation capabilities of a particular case size. Thermal capacities for the various case sizes have been determined and are listed in Table below. For additional description see page 78.

**T370 ESR (OHMS) at 100 kHz @ +25°C**
**(The ESR values provided below are for reference only. No warranty, as stated on page 3 and reincorporated here, is made as to the accuracy of these values for any particular T370 Series product.)**

| Cap. µF | 6 Volt | 10 Volt | 15 Volt | 20 Volt | 25 Volt | 35 Volt |
|---|---|---|---|---|---|---|
| 0.68 | | | | | | 10.0 |
| 1.00 | | | | | | 8.0 |
| 1.50 | | | | | | 6.0 |
| 2.20 | | | | | 6.0 | 5.0 |
| 3.30 | | | | 5.5 | 5.0 | 4.0 |
| 4.70 | | | | 4.5 | 4.0 | 3.0 |
| 6.80 | | 6.0 | | 3.6 | 3.1 | 2.5 |
| 10.0 | 6.0 | 5.0 | | 2.9 | 2.5 | 2.0 |
| 15.0 | 5.0 | 3.7 | 2.5 | 2.3 | 2.0 | 1.6 |
| 22.0 | 3.7 | 2.7 | 2.0 | 1.8 | 1.5 | 1.3 |
| 33.0 | 3.0 | 2.1 | 1.6 | 1.4 | 1.2 | |
| 47.0 | 2.0 | 1.7 | 1.3 | 1.2 | | |
| 68.0 | 1.8 | 1.3 | 1.0 | | | |
| 100.0 | 1.6 | 1.0 | | | | |
| 150.0 | 0.9 | | | | | |

- ENVIRONMENTAL CONSIDERATIONS:

| Case Size | Watts |
|---|---|
| C | .070 |
| D | .080 |
| E | .090 |
| F | .100 |

**Maximum Power Dissipation Capability @ 25°C**

A. Shock Test: MIL-STD-202, Method 213 Condition 1.
B. Thermal Shock, MIL-STD-202, Method 107.
C. Moisture Resistance: MIL-STD-202, Method 106.
D. Solderability: MIL-STD-202, Method 208.

For additional Environmental Test Information see pages 80, 81 and 82.

- LEAD MATERIAL: Solder coated nickel per MIL-STD1266, type N32.

- LEAD TAPE and REEL: Reeling per specification RS-468. See pages 72 and 74 for additional information.

## CAPACITOR OUTLINE DRAWING

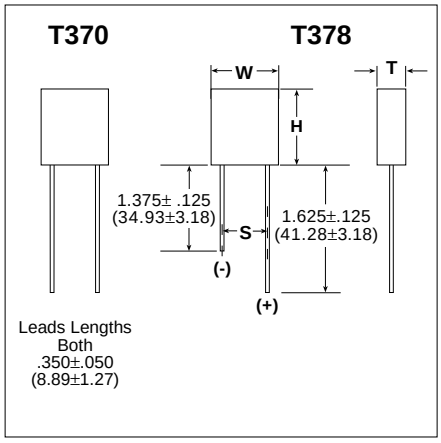


## DIMENSIONS - INCHES (MILLIMETER)

| CASE SIZE | H MAX. | W MAX. | T MAX. | S LEAD SPACING | LEAD DIAMETER ± .001 (.03) |
|---|---|---|---|---|---|
| *C | .225 (5.72) | .185 (4.70) | .075 (1.91) | .150 ± .010 (3.81 ± .25) | .016 (.41) |
| D | .290 (7.37) | .220 (5.59) | .110 (2.79) | .180 ± .010 (4.57 ± .25) | .016 (.41) |
| E | .310 (7.87) | .230 (5.84) | .130 (3.30) | .200 ± .010 (5.08 ± .25) | .016 (.41) |
| F | .475 (12.07) | .375 (9.53) | .150 (3.81) | .300 ± .010 (7.62 ± .25) | .016 (.41) |

*C case size T370 style only.

## CAPACITOR MARKING

### INDUSTRIAL PRODUCT

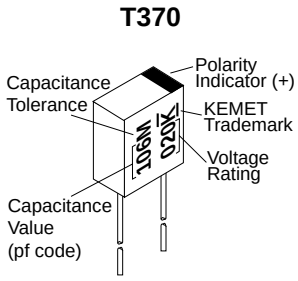


### MILITARY PRODUCT

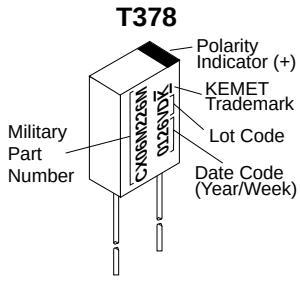


## ORDERING INFORMATION
## KEMET PART NUMBER

**T 37X D 475 M 035 A S***

**TANTALUM** — T

**SERIES** — 37X
T370, T378

**CASE SIZE** — D

**CAPACITANCE IN PICOFARAD CODE** — 475
First two digits are significant figures.
Third figure is the number of zeros following.

**CAPACITANCE TOLERANCE** — M
M — ±20%, K — ±10%, J — ±5%
L — +40%, -20%

**VOLTAGE RATING** — 035

**FAILURE RATE LEVEL** — A
A — Not Applicable

**LEAD MATERIAL** — S*
S — Standard
(solder-coated nickel)

***Part Number Example: T370D475M035AS (14 digits – no spaces)**

## MIL-PRF-49137/6 PART NUMBER
## CX06(T378) STYLE

**CX 06 D 335 K**

**TYPE** — CX
Fixed, solid tantalum, polar, nonhermetically sealed capacitors.

**STYLE** — 06
06-T378 (radial leads)

**VOLTAGE** — D

| Symbol | Rated (85°C) Volts, dc | Surge (85°C) Volts, dc |
|---|---|---|
| A | 2 | 2.6 |
| B | 3 | 4 |
| C | 4 | 5 |
| D | 6 | 8 |
| F | 10 | 13 |
| H | 15 | 20 |
| J | 20 | 26 |
| K | 25 | 32 |
| M | 35 | 46 |

**CAPACITANCE** — 335
The nominal capacitance value, expressed in picofarads (pF), is identified by a three digit number. The first two digits represent significant figures and the last digit specifies the number of zeros to follow.

**CAPACITANCE TOLERANCE** — K

| Symbol | Capacitance Tolerance Percent ± |
|---|---|
| K | 10 |
| M | 20 |

## RATINGS & PART NUMBER REFERENCE

| CAPACITANCE µF | CASE SIZE | INDUSTRIAL PRODUCT T370 PART NO. | MILITARY PRODUCT CX06 PART NO. | MILITARY PRODUCT T378 PART NO. | DC LEAKAGE µA@25°C MAXIMUM | DISSIPATION FACTOR %@25°C 120HZ MAXIMUM |
|---|---|---|---|---|---|---|
| **3 VOLT RATING AT 85°C—2.0 VOLT RATING AT 125°C** | | | | | | |
| 220.0 | F | T370F227(1)003AS | CX06B227(2) | T378F227(3)003AS | 9.0 | 15 |
| **4 VOLT RATING AT 85°C—2.7 VOLT RATING AT 125°C** | | | | | | |
| 15.0 | C | T370C156(1)004AS | | | 1.0 | 8 |
| 47.0 | D | T370D476(1)004AS | CX06C476(2) | T378D476(3)004AS | 2.0 | 8 |
| 68.0 | E | T370E686(1)004AS | CX06C686(2) | T378E686(3)004AS | 3.0 | 8 |
| **6 VOLT RATING AT 85°C—4.0 VOLT RATING AT 125°C** | | | | | | |
| 10.0 | C | T370C106(1)006AS | | | 1.0 | 6 |
| 33.0 | D | T370D336(1)006AS | CX06D336(2) | T378D336(3)006AS | 2.0 | 6 |
| 47.0 | E | T370E476(1)006AS | CX06D476(2) | T378E476(3)006AS | 3.0 | 6 |
| 150.0 | F | T370F157(1)006AS | CX06D157(2) | T378F157(3)006AS | 9.0 | 10 |
| **10 VOLT RATING AT 85°C—7.0 VOLT RATING AT 125°C** | | | | | | |
| 6.8 | C | T370C685(1)010AS | | | 1.0 | 6 |
| 22.0 | D | T370D226(1)010AS | CX06F226(2) | T378D226(3)010AS | 2.0 | 6 |
| 33.0 | E | T370E336(1)010AS | CX06F336(2) | T378E336(3)010AS | 3.0 | 6 |
| 100.0 | F | T370F107(1)010AS | CX06F107(2) | T378F107(3)010AS | 9.0 | 8 |
| **15 VOLT RATING AT 85°C—10 VOLT RATING AT 125°C** | | | | | | |
| 15.0 | D | T370D156(1)015AS | CX06H156(2) | T378D156(3)015AS | 2.0 | 6 |
| 22.0 | E | T370E226(1)015AS | CX06H226(2) | T378E226(3)015AS | 3.0 | 6 |
| 68.0 | F | T370F686(1)015AS | CX06H686(2) | T378F686(3)015AS | 9.0 | 8 |
| **20 VOLT RATING AT 85°C—13 VOLT RATING AT 125°C** | | | | | | |
| 3.3 | C | T370C335(1)020AS | | | 1.0 | 6 |
| 4.7 | C | T370C475(1)020AS | | | 1.0 | 6 |
| 10.0 | D | T370D106(1)020AS | CX06J106(2) | T378D106(3)020AS | 2.0 | 6 |
| 15.0 | E | T370E156(1)020AS | CX06J156(2) | T378E156(3)020AS | 3.0 | 6 |
| 47.0 | F | T370F476(1)020AS | CX06J476(2) | T378F476(3)020AS | 9.0 | 8 |
| **25 VOLT RATING AT 85°C—17 VOLT RATING AT 125°C** | | | | | | |
| 2.2 | C | T370C225(1)025AS | | | 1.0 | 6 |
| 6.8 | D | T370D685(1)025AS | CX06K685(2) | T378D685(3)025AS | 2.0 | 6 |
| 10.0 | E | T370E106(1)025AS | CX06K106(2) | T378E106(3)025AS | 3.0 | 6 |
| 33.0 | F | T370F336(1)025AS | CX06K336(2) | T378F336(3)025AS | 9.0 | 6 |
| **35 VOLT RATING AT 85°C—23 VOLT RATING AT 125°C** | | | | | | |
| 0.68 | C | T370C684(1)035AS | | | 1.0 | 6 |
| 1.0 | C | T370C105(1)035AS | | | 1.0 | 6 |
| 1.5 | C | T370C155(1)035AS | | | 1.0 | 6 |
| 2.2 | D | T370D225(1)035AS | CX06M225(2) | T378D225(3)035AS | 2.0 | 6 |
| 3.3 | D | T370D335(1)035AS | CX06M335(2) | T378D335(3)035AS | 2.0 | 6 |
| 4.7 | D | T370D475(1)035AS | CX06M475(2) | T378D475(3)035AS | 2.0 | 6 |
| 6.8 | E | T370E685(1)035AS | CX06M685(2) | T378E685(3)035AS | 3.0 | 6 |
| 10.0 | F | T370F106(1)035AS | CX06M106(2) | T378F106(3)035AS | 9.0 | 6 |
| 15.0 | F | T370F156(1)035AS | CX06M156(2) | T378F156(3)035AS | 9.0 | 6 |
| 22.0 | F | T370F226(1)035AS | CX06M226(2) | T378F226(3)035AS | 9.0 | 6 |

(1) To complete KEMET part number, insert capacitance tolerance symbol as follows: L = +40%, –20%; M = ±20%; K = ±10%; J = ±5%.
(2) To complete military part number, insert capacitance tolerance symbol as follows: M = ±20%; K = ±10%.
(3) To complete KEMET part number, insert capacitance tolerance symbol as follows: M = ±20%; K = ±10%.

## PERFORMANCE CHARACTERISTICS

- CAPACITANCE/VOLTAGE RANGE:
  T35X/T39X: 0.1-680µF, 3-50 Volts.
  T36X: 0.1-330µF, 6-50 Volts.

- CAPACITANCE TOLERANCE: Available in standard EIA nominal values with ±20% and ±10% standard.

- DISSIPATION FACTOR: Maximum DF limits are shown in corresponding series part number listings. See Application Notes Section, page 76 for additional information.

- DC LEAKAGE CURRENT: Maximum leakage values at 25° are shown in part number listings, pages 63-65, 67, 68 and 70. See Application Notes Section, pages 76 & 77 for additional information.

- RATED VOLTAGE; WORKING VOLTAGE; SURGE VOLTAGE; REVERSE VOLTAGE: See Application Notes Section, pages 76 & 77 for description.

- IMPEDANCE and ESR: See Application Notes Section, page 77 & 78 for description. Reference ESR values are shown in table below.

**Commercial T35X/T36X/T39X ESR (OHMS) at 100 kHz @ +25°C**
**(The ESR values provided below are for reference only. No warranty, as stated on page 3 and reincorporated here, is made as to the accuracy of these values for any particular T35X, T36X, T39X Series product.)**

| Cap. µF | 6 Volt | 10 Volt | 16 Volt | 20 Volt | 25 Volt | 35 Volt | 50 Volt |
|---|---|---|---|---|---|---|---|
| 0.10 | | | | | | 26.0 | 26.0 |
| 0.15 | | | | | | 21.0 | 21.0 |
| 0.22 | | | | | | 17.0 | 17.0 |
| 0.33 | | | | | | 15.0 | 15.0 |
| 0.47 | | | | | | 13.0 | 13.0 |
| 0.68 | | | | | | 10.0 | 10.0 |
| 1.00 | | | | 10.0 | 10.0 | 8.0 | 8.0 |
| 1.50 | | | 10.0 | 9.0 | 8.0 | 6.0 | 5.0 |
| 2.20 | | 13.0 | 8.0 | 7.0 | 6.0 | 5.0 | 3.5 |
| 3.30 | 13.0 | 10.0 | 6.0 | 5.5 | 5.0 | 4.0 | 3.0 |
| 4.70 | 10.0 | 8.0 | 5.0 | 4.5 | 4.0 | 3.0 | 2.5 |
| 6.80 | 8.0 | 6.0 | 4.0 | 3.6 | 3.1 | 2.5 | 2.0 |
| 10.0 | 6.0 | 5.0 | 3.2 | 2.9 | 2.5 | 2.0 | 1.6 |
| 15.0 | 5.0 | 3.7 | 2.5 | 2.3 | 2.0 | 1.6 | 1.2 |
| 22.0 | 3.7 | 2.7 | 2.0 | 1.8 | 1.5 | 1.3 | 1.0 |
| 33.0 | 3.0 | 2.1 | 1.6 | 1.4 | 1.2 | 1.0 | |
| 47.0 | 2.0 | 1.7 | 1.3 | 1.2 | 1.0 | 0.8 | |
| 68.0 | 1.8 | 1.3 | 1.0 | 0.9 | 0.8 | | |
| 100.0 | 1.6 | 1.0 | 0.8 | 0.6 | | | |
| 150.0 | 0.9 | 0.8 | 0.6 | | | | |
| 220.0 | 0.9 | 0.6 | | | | | |
| 330.0 | 0.7 | | | | | | |

- AC RIPPLE VOLTAGE: Permissible AC ripple voltage is related to equivalent series resistance (ESR) and power dissipation capability. Maximum power dissipation for each case size is listed in Table below. For additional description see page 78.

| Case Size | Power Dissipation (max.) @ 25°C (watts) |
|---|---|
| T35X, A | .040 |
| T39X B | .050 |
| C | .060 |
| D | .065 |
| E | .070 |
| F | .080 |
| G | .090 |
| H | .100 |
| J | .110 |
| K | .120 |
| L | .130 |
| M | .140 |
| T36X A | .050 |
| B | .075 |
| C | .090 |
| D | .135 |

**Maximum Power Dissipation Capability @ 25°C**

- ENVIRONMENTAL CONSIDERATIONS:
  A. Shock Test: MIL-STD-202, Method 213.
  B. Thermal Shock, MIL-STD-202, Method 107, Condition A.
  C. Moisture Resistance: MIL-STD-202, Method 106.
  D. Solderability: MIL-STD-202, Method 208.
  For additional Environmental Test Information see pages 80, 81 and 82.

- LEAD MATERIAL: Effective June 30, 2005 the T35x, T368 and T39x Series will be available, as an option, with 100% Matte Tin (RoHS compliant) lead wire or Sn/Pb lead wire. Please see page 63 for part number ordering information. The T363 and T369 lead material will remain Sn/Pb solder coated steel core with a copper ply per MIL-STD-127 and at this time will not be available with a 100% Sn option.

- LEAD TAPE AND REEL: Reeling per specification RS-468. See pages 72 - 74 for additional information.

# TANTALUM DIPPED / RADIAL - POLAR

## T350, T351, T352, T353, T354, T355 & T356 SERIES "ULTRADIP II"

The KEMET 'UltraDip II' Capacitors offer the designer of quality instruments and entertainment systems the widely recognized advantages inherent in solid tantalum capacitors at competitive prices.

The 'UltraDip II' Series, miniature dipped solid tantalum capacitors, provide the designer with the advantage of compactness plus low leakage and low DF performance characteristics for filtering, bypassing, coupling, blocking and RC timing circuits. This series features a capacitance range from 0.1 to 680 microfarads at voltages from 3 to 50 VDC. 'UltraDip II' capacitors utilize the same sophisticated materials and processes which have advanced KEMET Electronics Corporation to the leadership position in solid tantalum capacitors.

The plastic case provides a tough barrier coating and maintains precision of lead wire spacing within ±0.015 inch. The gold color epoxy utilized permits Laser marking with outstanding permanency and legibility. All case sizes are printed with capacitance, voltage, polarity and vendor identification.

Solid tantalum devices exhibit no degradation failure mode during shelf storage and show a constantly decreasing failure rate (i.e., absence of wearout mechanism) during life tests.

The 'UltraDip II' Series provides self-insulating cases which are resistant to shock and vibration. These capacitors exhibit low DCL, ESR and Impedance and have excellent temperature stability.

**Effective June 30, 2005 the T35x Series is RoHS compliant.**

## CAPACITOR OUTLINE DRAWINGS

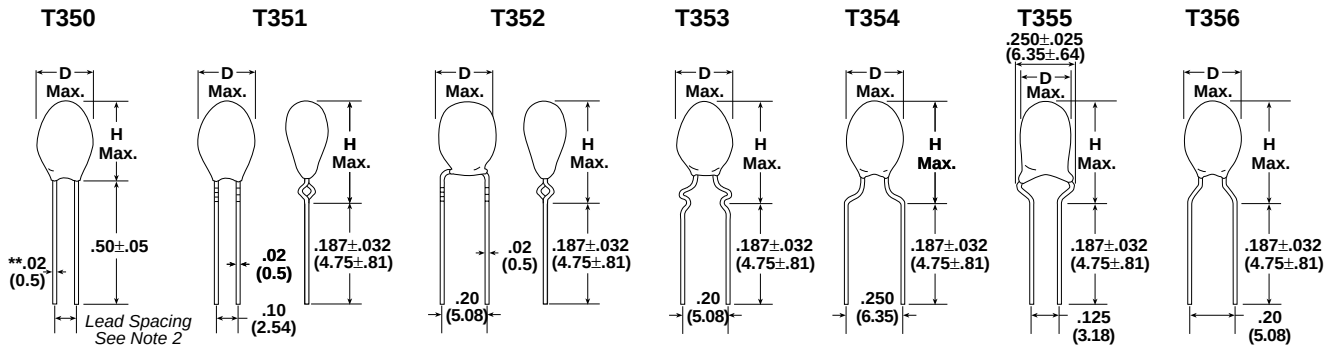


*Lead Tolerance = ± .015 (± .38 mm) ** All Lead Diameters = .02 ± .002 (0.5 ± .05 mm)

## DIMENSIONS — INCHES (MILLIMETERS)

| | All | T350 | T351 | T352 | T353 | T354 | T355 | T356 |
|---|---|---|---|---|---|---|---|---|
| Case Size | D Max Diameter | H(1) Max Height | H(1) Max Height | H(1) Max Height | H(1) Max Height | H(1) Max Height | H(1) Max Height | H(1) Max Height |
| A | .175 (4.5) | .280 (7.1) | .380 (9.6) | .400 (10.2) | .400 (10.2) | .340 (8.6) | .340 (8.6) | .340 (8.6) |
| B | .175 (4.5) | .300 (7.6) | .390 (9.9) | .410 (10.4) | .410 (10.4) | .350 (8.9) | .350 (8.9) | .350 (8.9) |
| C | .196 (5.0) | .330 (8.4) | .420 (10.7) | .440 (11.2) | .440 (11.2) | .380 (9.6) | .380 (9.6) | .380 (9.6) |
| D | .196 (5.0) | .340 (8.6) | .430 (10.9) | .450 (11.4) | .450 (11.4) | .390 (9.9) | .390 (9.9) | .390 (9.9) |
| E | .216 (5.5) | .350 (8.9) | .440 (11.2) | .460 (11.7) | .460 (11.7) | .400 (10.2) | .400 (10.2) | .400 (10.2) |
| F | .236 (6.0) | .390 (9.9) | .480 (12.2) | .500 (12.7) | .500 (12.7) | .440 (11.2) | .440 (11.2) | .440 (11.2) |
| G | .250 (6.3) | .400 (10.2) | .490 (12.4) | .510 (13.0) | .510 (13.0) | .450 (11.4) | .450 (11.4) | .450 (11.4) |
| H | .300 (7.6) | .400 (10.2) | .500 (12.7) | .520 (13.2) | .520 (13.2) | .470 (11.9) | .470 (11.9) | .470 (11.9) |
| J(2) | .330 (8.4) | .500 (12.7) | Note 3 | Note 3 | .580 (14.7) | .550 (14.0) | Note 3 | .550 (14.0) |
| K(2) | .350 (8.9) | .530 (13.5) | | | .630 (16.0) | .610 (15.5) | | .610 (15.5) |
| L(2) | .350 (8.9) | .630 (16.0) | | | .730 (18.5) | .710 (18.1) | | .710 (18.1) |
| M(2) | .400 (10.2) | .670 (17.0) | | | .760 (19.3) | .740 (18.8) | | .740 (18.8) |

NOTES: (1) All "H" Dimensions are from Capacitor seating plane to top of Capacitor.
(2) On T350 Series, case sizes A-H are supplied with .100"(2.54) lead spacing—case sizes J-M are supplied with .200"(5.08) lead spacing.
(3) These case sizes are not available for T351, T352 & T355 capacitors.

## LEAD CONFIGURATION & SPACING CHART

| CASE | LEAD CONFIGURATION | SERIES T350 | T351 | T352 | T353 | T354 | T355 | T356 |
|---|---|---|---|---|---|---|---|---|
| A-H | .100 | X | X | | | | | |
| | .125 | | | | | | X | |
| | .200 | | | X | X | | | X |
| | .250 | | | | | X | | |
| | STRAIGHT LEAD | X | | | | | | |
| | STAND OFF | | X | X | | X | X | X |
| | SNAP-IN | | | | X | | | |
| J-M | .100 | | "NOT AVAILABLE" | "NOT AVAILABLE" | | | "NOT AVAILABLE" | |
| | .125 | | | | | | | |
| | .200 | X | | | X | | | X |
| | .250 | | | | | X | | |
| | STRAIGHT LEAD | X | | | | | | |
| | STAND OFF | | | | | X | | X |
| | SNAP-IN | | | | X | | | |

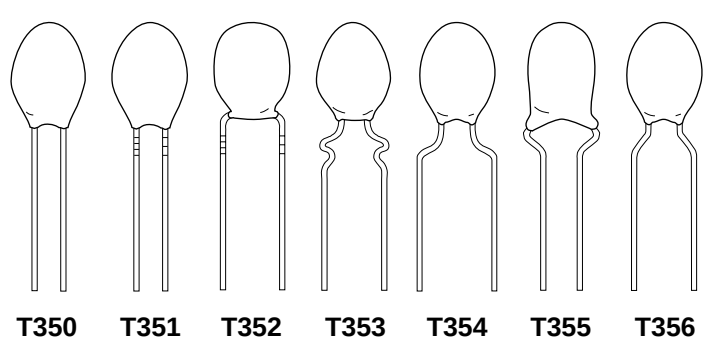

### T35X & T36X ORDERING INFORMATION

**T 3XX A 105 M 035 A S***

**TANTALUM**

**SERIES**
Insert appropriate number to replace letter "X" — 350, 351, 352, 353, 354, 355, 356, 363, 368, or 369.

**CASE SIZE**
A, B, C, D, E, F, G, H, J, K, L & M

**PICOFARAD CODE**
First two digits are significant figures. Third figure is the number of zeros following.

**LEAD MATERIAL**
S — Sn/Pb (tin/lead)
T – 100% Sn (tin)

**FAILURE RATE LEVEL**
A — Not Applicable

**VOLTAGE RATING**
For 6.3 Volts use 006

**CAPACITANCE TOLERANCE**
M — ±20%
K — ±10%
J — ±5% Available on special order.
*T363 & T369 capacitors available only with M & K tolerances

***Part Number Example: T350A105M035AS (14 digits – no spaces)**

### T35X & T368 MARKING INFORMATION

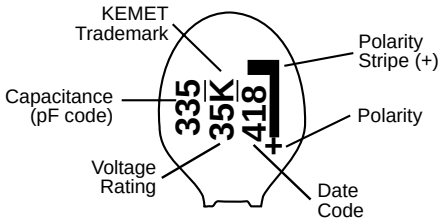


### T35X RATINGS AND PART NUMBER REFERENCE

| CAPACITANCE µF | CASE SIZE | KEMET PART NUMBER | D.C. LEAKAGE µA@25°C | MAX. DISSIPATION FACTOR %@25°C, 120Hz |
|---|---|---|---|---|
| **3 VOLT RATING AT 85°C — 2 VOLT RATING AT 125°C** | | | | |
| 4.7 | A | T35(1)A475(3)003A(4) | 0.5 | 5 |
| 5.6 | A | T35(1)A565(3)003A(4) | 0.5 | 5 |
| 6.8 | A | T35(1)A685(3)003A(4) | 0.5 | 5 |
| 8.2 | A | T35(1)A825(3)003A(4) | 0.5 | 6 |
| 10.0 | A | T35(1)A106(3)003A(4) | 0.5 | 6 |
| 12.0 | B | T35(1)B126(3)003A(4) | 0.5 | 6 |
| 15.0 | B | T35(1)B156(3)003A(4) | 0.5 | 6 |
| 18.0 | C | T35(1)C186(3)003A(4) | 0.5 | 6 |
| 22.0 | C | T35(1)C226(3)003A(4) | 0.5 | 6 |
| 27.0 | D | T35(1)D276(3)003A(4) | 0.6 | 6 |
| 33.0 | D | T35(1)D336(3)003A(4) | 0.8 | 6 |
| 39.0 | E | T35(1)E396(3)003A(4) | 0.9 | 6 |
| 47.0 | E | T35(1)E476(3)003A(4) | 1.1 | 6 |
| 56.0 | F | T35(1)F566(3)003A(4) | 1.3 | 6 |
| 68.0 | F | T35(1)F686(3)003A(4) | 1.6 | 6 |
| 82.0 | G | T35(1)G826(3)003A(4) | 2.0 | 8 |
| 100.0 | G | T35(1)G107(3)003A(4) | 2.4 | 8 |
| 120.0 | H | T35(1)H127(3)003A(4) | 2.9 | 8 |
| 150.0 | H | T35(1)H157(3)003A(4) | 3.6 | 8 |
| 180.0 | J | T35(2)J187(3)003A(4) | 4.3 | 8 |
| 220.0 | J | T35(2)J227(3)003A(4) | 5.3 | 8 |
| 270.0 | K | T35(2)K277(3)003A(4) | 6.5 | 8 |
| 330.0 | K | T35(2)K337(3)003A(4) | 7.9 | 8 |
| 390.0 | L | T35(2)L397(3)003A(4) | 9.4 | 9 |
| 470.0 | L | T35(2)L477(3)003A(4) | 10.0 | 9 |
| 560.0 | M | T35(2)M567(3)003A(4) | 10.0 | 9 |
| 680.0 | M | T35(2)M687(3)003A(4) | 10.0 | 9 |

| CAPACITANCE µF | CASE SIZE | KEMET PART NUMBER | D.C. LEAKAGE µA@25°C | MAX. DISSIPATION FACTOR %@25°C, 120Hz |
|---|---|---|---|---|
| **6.3 VOLT RATING AT 85°C — 4 VOLT RATING AT 125°C** | | | | |
| 3.3 | A | T35(1)A335(3)006A(4) | 0.5 | 5 |
| 3.9 | A | T35(1)A395(3)006A(4) | 0.5 | 5 |
| 4.7 | A | T35(1)A475(3)006A(4) | 0.5 | 5 |
| 5.6 | A | T35(1)A565(3)006A(4) | 0.5 | 5 |
| 6.8 | A | T35(1)A685(3)006A(4) | 0.5 | 5 |
| 8.2 | B | T35(1)B825(3)006A(4) | 0.5 | 6 |
| 10.0 | B | T35(1)B106(3)006A(4) | 0.5 | 6 |
| 12.0 | C | T35(1)C126(3)006A(4) | 0.6 | 6 |
| 15.0 | C | T35(1)C156(3)006A(4) | 0.7 | 6 |
| 18.0 | D | T35(1)D186(3)006A(4) | 0.9 | 6 |
| 22.0 | D | T35(1)D226(3)006A(4) | 1.1 | 6 |
| 27.0 | E | T35(1)E276(3)006A(4) | 1.3 | 6 |
| 33.0 | E | T35(1)E336(3)006A(4) | 1.6 | 6 |
| 39.0 | F | T35(1)F396(3)006A(4) | 1.9 | 6 |
| 47.0 | F | T35(1)F476(3)006A(4) | 2.3 | 6 |
| 56.0 | G | T35(1)G566(3)006A(4) | 2.7 | 6 |
| 68.0 | G | T35(1)G686(3)006A(4) | 3.3 | 6 |
| 82.0 | H | T35(1)H826(3)006A(4) | 3.9 | 8 |
| 100.0 | H | T35(1)H107(3)006A(4) | 4.8 | 8 |
| 120.0 | J | T35(2)J127(3)006A(4) | 5.8 | 8 |
| 150.0 | J | T35(2)J157(3)006A(4) | 7.2 | 8 |
| 180.0 | K | T35(2)K187(3)006A(4) | 8.6 | 8 |
| 220.0 | K | T35(2)K227(3)006A(4) | 10.0 | 8 |
| 270.0 | L | T35(2)L277(3)006A(4) | 10.0 | 8 |
| 330.0 | L | T35(2)L337(3)006A(4) | 10.0 | 8 |

(1) To complete KEMET Part Number, insert Series Designation as follows: "0" = T350, "1" = T351, "2" = T352, "3" = T353, "4" = T354, "5" = T355, "6" = T356.
(2) To complete KEMET Part Number, insert only Series Designation as follows: "0" = T350, "3" = T353, "4" = T354, "6" = T356.
(3) To complete KEMET Part Number, insert Capacitance Tolerance Symbol: "M" = ±20%, "K" = ±10%.
(4) To complete KEMET Part Number, insert Lead Material designation : S = SnPb (tin/lead) and T = 100% Sn (tin).
NOTE: Higher voltage and better capacitance tolerance product may be substituted for an order within the same case size at KEMET's option.

## T35X
## RATINGS AND PART NUMBER REFERENCE

| CAPAC-ITANCE µF | CASE SIZE | KEMET PART NUMBER | D.C. LEAKAGE µA@25°C | MAX. DISSI-PATION FACTOR %@25°C, 120Hz |
|---|---|---|---|---|
| **10 VOLT RATING AT 85°C — 7 VOLT RATING AT 125°C** | | | | |
| 2.2 | A | T35(1)A225(3)010A(4) | 0.5 | 5 |
| 2.7 | A | T35(1)A275(3)010A(4) | 0.5 | 5 |
| 3.3 | A | T35(1)A335(3)010A(4) | 0.5 | 5 |
| 3.9 | A | T35(1)A395(3)010A(4) | 0.5 | 5 |
| **4.7** | **A** | **T35(1)A475(3)010A(4)** | **0.5** | **5** |
| 5.6 | B | T35(1)B565(3)010A(4) | 0.5 | 5 |
| 6.8 | B | T35(1)B685(3)010A(4) | 0.5 | 5 |
| 8.2 | C | T35(1)C825(3)010A(4) | 0.7 | 6 |
| 10.0 | C | T35(1)C106(3)010A(4) | 0.8 | 6 |
| 12.0 | E | T35(1)E126(3)010A(4) | 1.0 | 6 |
| 15.0 | E | T35(1)E156(3)010A(4) | 1.2 | 6 |
| 18.0 | E | T35(1)E186(3)010A(4) | 1.4 | 6 |
| 22.0 | E | T35(1)E226(3)010A(4) | 1.8 | 6 |
| 27.0 | F | T35(1)F276(3)010A(4) | 2.2 | 6 |
| **33.0** | **F** | **T35(1)F336(3)010A(4)** | **2.6** | **6** |
| 39.0 | G | T35(1)G396(3)010A(4) | 3.1 | 6 |
| 47.0 | H | T35(1)H476(3)010A(4) | 3.8 | 6 |
| 56.0 | H | T35(1)H566(3)010A(4) | 4.5 | 6 |
| 68.0 | H | T35(1)H686(3)010A(4) | 5.4 | 6 |
| 82.0 | J | T35(2)J826(3)010A(4) | 6.6 | 8 |
| **100.0** | **J** | **T35(2)J107(3)010A(4)** | **8.0** | **8** |
| 120.0 | K | T35(2)K127(3)010A(4) | 9.6 | 8 |
| 150.0 | K | T35(2)K157(3)010A(4) | 10.0 | 8 |
| 180.0 | L | T35(2)L187(3)010A(4) | 10.0 | 8 |
| 220.0 | L | T35(2)L227(3)010A(4) | 10.0 | 8 |
| **16 VOLT RATING AT 85°C — 10 VOLT RATING AT 125°C** | | | | |
| 1.5 | A | T35(1)A155(3)016A(4) | 0.5 | 5 |
| 1.8 | A | T35(1)A185(3)016A(4) | 0.5 | 5 |
| **2.2** | **A** | **T35(1)A225(3)016A(4)** | **0.5** | **5** |
| 2.7 | A | T35(1)A275(3)016A(4) | 0.5 | 5 |
| 3.3 | A | T35(1)A335(3)016A(4) | 0.5 | 5 |
| 3.9 | B | T35(1)B395(3)016A(4) | 0.5 | 5 |
| **4.7** | **B** | **T35(1)B475(3)016A(4)** | **0.6** | **5** |
| 5.6 | C | T35(1)C565(3)016A(4) | 0.7 | 5 |
| 6.8 | C | T35(1)C685(3)016A(4) | 0.9 | 5 |
| 8.2 | E | T35(1)E825(3)016A(4) | 1.0 | 6 |
| **10.0** | **E** | **T35(1)E106(3)016A(4)** | **1.3** | **6** |
| 12.0 | E | T35(1)E126(3)016A(4) | 1.5 | 6 |
| 15.0 | E | T35(1)E156(3)016A(4) | 1.8 | 6 |
| 18.0 | F | T35(1)F186(3)016A(4) | 2.2 | 6 |
| **22.0** | **F** | **T35(1)F226(3)016A(4)** | **2.6** | **6** |
| 27.0 | H | T35(1)H276(3)016A(4) | 3.2 | 6 |
| 33.0 | H | T35(1)H336(3)016A(4) | 4.0 | 6 |
| 39.0 | J | T35(2)J396(3)016A(4) | 4.7 | 6 |
| **47.0** | **J** | **T35(2)J476(3)016A(4)** | **5.6** | **6** |
| 56.0 | K | T35(2)K566(3)016A(4) | 6.8 | 6 |
| **68.0** | **K** | **T35(2)K686(3)016A(4)** | **8.2** | **6** |
| 82.0 | L | T35(2)L826(3)016A(4) | 9.8 | 8 |
| **100.0** | **L** | **T35(2)L107(3)016A(4)** | **10.0** | **8** |
| 120.0 | M | T35(2)M127(3)016A(4) | 10.0 | 8 |
| 150.0 | M | T35(2)M157(3)016A(4) | 10.0 | 8 |

| CAPAC-ITANCE µF | CASE SIZE | KEMET PART NUMBER | D.C. LEAKAGE µA@25°C | MAX. DISSI-PATION FACTOR %@25°C, 120Hz |
|---|---|---|---|---|
| **20 VOLT RATING AT 85°C — 13 VOLT RATING AT 125°C** | | | | |
| 1.0 | A | T35(1)A105(3)020A(4) | 0.5 | 5 |
| 1.2 | A | T35(1)A125(3)020A(4) | 0.5 | 5 |
| 1.5 | A | T35(1)A155(3)020A(4) | 0.5 | 5 |
| 1.8 | A | T35(1)A185(3)020A(4) | 0.5 | 5 |
| 2.2 | A | T35(1)A225(3)020A(4) | 0.5 | 5 |
| 2.7 | B | T35(1)B275(3)020A(4) | 0.5 | 5 |
| 3.3 | B | T35(1)B335(3)020A(4) | 0.5 | 5 |
| 3.9 | C | T35(1)C395(3)020A(4) | 0.6 | 5 |
| 4.7 | C | T35(1)C475(3)020A(4) | 0.8 | 5 |
| 5.6 | D | T35(1)D565(3)020A(4) | 0.9 | 5 |
| 6.8 | D | T35(1)D685(3)020A(4) | 1.1 | 5 |
| 8.2 | E | T35(1)E825(3)020A(4) | 1.3 | 6 |
| 10.0 | E | T35(1)E106(3)020A(4) | 1.6 | 6 |
| 12.0 | F | T35(1)F126(3)020A(4) | 1.9 | 6 |
| 15.0 | F | T35(1)F156(3)020A(4) | 2.4 | 6 |
| 18.0 | G | T35(1)G186(3)020A(4) | 2.9 | 6 |
| 22.0 | G | T35(1)G226(3)020A(4) | 3.5 | 6 |
| 27.0 | J | T35(2)J276(3)020A(4) | 4.3 | 6 |
| 33.0 | J | T35(2)J336(3)020A(4) | 5.3 | 6 |
| 39.0 | K | T35(2)K396(3)020A(4) | 6.2 | 6 |
| 47.0 | K | T35(2)K476(3)020A(4) | 7.5 | 6 |
| 56.0 | L | T35(2)L566(3)020A(4) | 9.0 | 6 |
| 68.0 | L | T35(2)L686(3)020A(4) | 10.0 | 6 |
| 82.0 | M | T35(2)M826(3)020A(4) | 10.0 | 8 |
| **100.0** | **M** | **T35(2)M107(3)020A(4)** | **10.0** | **8** |
| **25 VOLT RATING AT 85°C — 16.5 VOLT RATING AT 125°C** | | | | |
| **1.0** | **A** | **T35(1)A105(3)025A(4)** | **0.5** | **5** |
| 1.2 | A | T35(1)A125(3)025A(4) | 0.5 | 5 |
| 1.5 | A | T35(1)A155(3)025A(4) | 0.5 | 5 |
| 1.8 | A | T35(1)A185(3)025A(4) | 0.5 | 5 |
| **2.2** | **B** | **T35(1)B225(3)025A(4)** | **0.5** | **5** |
| 2.7 | B | T35(1)B275(3)025A(4) | 0.5 | 5 |
| 3.3 | B | T35(1)B335(3)025A(4) | 0.7 | 5 |
| 3.9 | C | T35(1)C395(3)025A(4) | 0.8 | 5 |
| 4.7 | C | T35(1)C475(3)025A(4) | 0.9 | 5 |
| 5.6 | E | T35(1)E565(3)025A(4) | 1.1 | 5 |
| 6.8 | E | T35(1)E685(3)025A(4) | 1.4 | 5 |
| 8.2 | E | T35(1)E825(3)025A(4) | 1.6 | 6 |
| **10.0** | **E** | **T35(1)E106(3)025A(4)** | **2.0** | **6** |
| 12.0 | G | T35(1)G126(3)025A(4) | 2.4 | 6 |
| **15.0** | **G** | **T35(1)G156(3)025A(4)** | **3.0** | **6** |
| 18.0 | H | T35(1)H186(3)025A(4) | 3.6 | 6 |
| **22.0** | **H** | **T35(1)H226(3)025A(4)** | **4.4** | **6** |
| 27.0 | J | T35(2)J276(3)025A(4) | 5.4 | 6 |
| 33.0 | J | T35(2)J336(3)025A(4) | 6.6 | 6 |
| 39.0 | K | T35(2)K396(3)025A(4) | 7.8 | 6 |
| **47.0** | **K** | **T35(2)K476(3)025A(4)** | **9.4** | **6** |
| 56.0 | L | T35(2)L566(3)025A(4) | 10.0 | 6 |
| 68.0 | L | T35(2)L686(3)025A(4) | 10.0 | 6 |

(1) To complete KEMET Part Number, insert Series Designation as follows: "0" = T350, "1" = T351, "2" = T352, "3" = T353, "4" = T354, "5" = T355, "6" = T356.
(2) To complete KEMET Part Number, insert only Series Designation as follows: "0" = T350, "3" = T353, "4" = T354, "6" = T356.
(3) To complete KEMET Part Number, insert Capacitance Tolerance Symbol: "M" = ±20%, "K" = ±10%.
(4) To complete KEMET Part Number, insert Lead Material Designation as follows: S = Sn/Pb (tin/lead) and T = 100% Sn (tin).
NOTE: Higher voltage and better capacitance tolerance product may be substituted for an order within the same case size at KEMET's option.

## T35X

## RATINGS AND PART NUMBER REFERENCE

| CAPAC-ITANCE µF | CASE SIZE | KEMET PART NUMBER | D.C. LEAKAGE µA@25°C | MAX. DISSI-PATION FACTOR %@25°C, 120Hz |
|---|---|---|---|---|
| **35 VOLT RATING AT 85°C — 23 VOLT RATING AT 125°C** | | | | |
| 0.10 | A | T35(1)A104(3)035A(4) | 0.5 | 3 |
| 0.12 | A | T35(1)A124(3)035A(4) | 0.5 | 3 |
| 0.15 | A | T35(1)A154(3)035A(4) | 0.5 | 3 |
| 0.18 | A | T35(1)A184(3)035A(4) | 0.5 | 3 |
| 0.22 | A | T35(1)A224(3)035A(4) | 0.5 | 3 |
| 0.27 | A | T35(1)A274(3)035A(4) | 0.5 | 3 |
| 0.33 | A | T35(1)A334(3)035A(4) | 0.5 | 3 |
| 0.39 | A | T35(1)A394(3)035A(4) | 0.5 | 3 |
| 0.47 | A | T35(1)A474(3)035A(4) | 0.5 | 3 |
| 0.56 | A | T35(1)A564(3)035A(4) | 0.5 | 3 |
| 0.68 | A | T35(1)A684(3)035A(4) | 0.5 | 3 |
| 0.82 | A | T35(1)A824(3)035A(4) | 0.5 | 3 |
| **1.0** | **A** | **T35(1)A105(3)035A(4)** | **0.5** | **3** |
| 1.2 | B | T35(1)B125(3)035A(4) | 0.5 | 5 |
| 1.5 | B | T35(1)B155(3)035A(4) | 0.5 | 5 |
| 1.8 | C | T35(1)C185(3)035A(4) | 0.5 | 5 |
| **2.2** | **C** | **T35(1)C225(3)035A(4)** | **0.6** | **5** |
| 2.7 | D | T35(1)D275(3)035A(4) | 0.7 | 5 |
| 3.3 | D | T35(1)D335(3)035A(4) | 0.9 | 5 |
| 3.9 | E | T35(1)E395(3)035A(4) | 1.0 | 5 |
| **4.7** | **E** | **T35(1)E475(3)035A(4)** | **1.3** | **5** |
| 5.6 | F | T35(1)F565(3)035A(4) | 1.6 | 5 |
| **6.8** | **F** | **T35(1)F685(3)035A(4)** | **1.9** | **5** |
| 8.2 | G | T35(1)G825(3)035A(4) | 2.3 | 6 |
| **10.0** | **G** | **T35(1)G106(3)035A(4)** | **2.8** | **6** |
| 12.0 | J | T35(2)J126(3)035A(4) | 3.4 | 6 |
| 15.0 | J | T35(2)J156(3)035A(4) | 4.2 | 6 |
| 18.0 | K | T35(2)K186(3)035A(4) | 5.0 | 6 |
| **22.0** | **K** | **T35(2)K226(3)035A(4)** | **6.2** | **6** |
| 27.0 | L | T35(2)L276(3)035A(4) | 7.6 | 6 |
| 33.0 | L | T35(2)L336(3)035A(4) | 9.2 | 6 |
| 39.0 | M | T35(2)M396(3)035A(4) | 10.0 | 6 |
| **47.0** | **M** | **T35(2)M476(3)035A(4)** | **10.0** | **6** |

| CAPAC-ITANCE µF | CASE SIZE | KEMET PART NUMBER | D.C. LEAKAGE µA@25°C | MAX. DISSI-PATION FACTOR %@25°C, 120Hz |
|---|---|---|---|---|
| **50 VOLT RATING AT 85°C — 33 VOLT RATING AT 125°C** | | | | |
| 0.10 | A | T35(1)A104(3)050A(4) | 0.5 | 3 |
| 0.12 | A | T35(1)A124(3)050A(4) | 0.5 | 3 |
| 0.15 | A | T35(1)A154(3)050A(4) | 0.5 | 3 |
| 0.18 | A | T35(1)A184(3)050A(4) | 0.5 | 3 |
| 0.22 | A | T35(1)A224(3)050A(4) | 0.5 | 3 |
| 0.27 | A | T35(1)A274(3)050A(4) | 0.5 | 3 |
| 0.33 | A | T35(1)A334(3)050A(4) | 0.5 | 3 |
| 0.39 | B | T35(1)B394(3)050A(4) | 0.5 | 3 |
| 0.47 | B | T35(1)B474(3)050A(4) | 0.5 | 3 |
| 0.56 | B | T35(1)B564(3)050A(4) | 0.5 | 3 |
| 0.68 | B | T35(1)B684(3)050A(4) | 0.5 | 3 |
| 0.82 | B | T35(1)B824(3)050A(4) | 0.5 | 3 |
| **1.0** | **B** | **T35(1)B105(3)050A(4)** | **0.5** | **3** |
| 1.2 | D | T35(1)D125(3)050A(4) | 0.5 | 5 |
| 1.5 | E | T35(1)E155(3)050A(4) | 0.6 | 5 |
| 1.8 | E | T35(1)E185(3)050A(4) | 0.7 | 5 |
| 2.2 | E | T35(1)E225(3)050A(4) | 0.9 | 5 |
| 2.7 | F | T35(1)F275(3)050A(4) | 1.1 | 5 |
| 3.3 | F | T35(1)F335(3)050A(4) | 1.3 | 5 |
| 3.9 | G | T35(1)G395(3)050A(4) | 1.6 | 5 |
| 4.7 | G | T35(1)G475(3)050A(4) | 1.9 | 5 |
| 5.6 | H | T35(1)H565(3)050A(4) | 2.2 | 5 |
| **6.8** | **J** | **T35(2)J685(3)050A(4)** | **2.7** | **5** |
| 8.2 | J | T35(2)J825(3)050A(4) | 3.3 | 6 |
| **10.0** | **K** | **T35(2)K106(3)050A(4)** | **4.0** | **6** |
| 12.0 | K | T35(2)K126(3)050A(4) | 4.8 | 6 |
| 15.0 | L | T35(2)L156(3)050A(4) | 6.0 | 6 |
| 18.0 | L | T35(2)L186(3)050A(4) | 7.2 | 6 |
| 22.0 | M | T35(2)M226(3)050A(4) | 8.8 | 6 |

(1) To complete KEMET Part Number, insert Series Designation as follows: "0" = T350, "1" = T351, "2" = T352, "3" = T353, "4" = T354, "5" = T355, "6" = T356.
(2) To complete KEMET Part Number, insert only Series Designation as follows: "0" = T350, "3" = T353, "4" = T354, "6" = T356.
(3) To complete KEMET Part Number, insert Capacitance Tolerance Symbol: "M" = ±20%, "K" = ±10%.
(4) To complete KEMET Part Number, insert Lead Material Designation as follows: S = Sn/Pb (tin/lead) and T = 100% Tin.
Note: Higher voltage and better capacitance tolerance product may be substituted for an order within the same case size at KEMET's option.

Product manufactured to the requirements of MIL-PRF-49137 satisfy all the performance characteristics of the UltraDip II. The performance characteristics meet or exceed the requirements of MIL-PRF-49137.

In addition to the standard process testing done on the UltraDip II, all product supplied to MIL-PRF-49137 is sampled on a lot by lot basis for Group A and Group B inspection to insure compliance. Product supplied per MIL-PRF-49137 also receives an additional post process burn-in for at least two (2) hours under accelerated voltage stress in excess of 125% of DC rated voltage. This post process burn-in is equivalent to 200 hours under rated conditions.

## CAPACITOR OUTLINE DRAWINGS

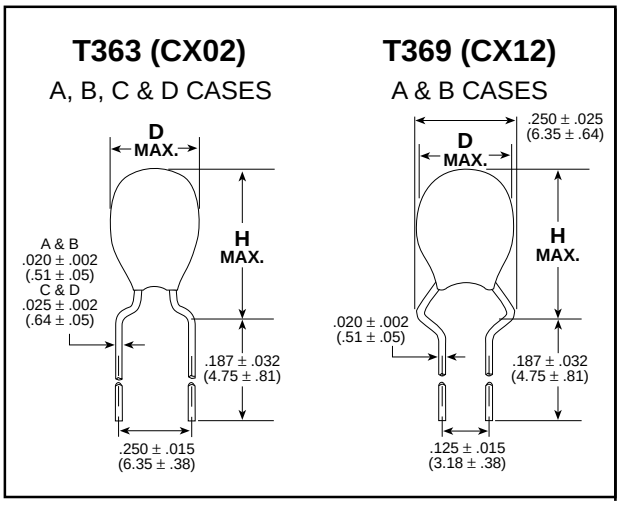


## DIMENSIONS — INCHES & (MILLIMETERS)

**T363 A-D CASE**
**T369 A&B CASE ONLY**

| CASE SIZE | D MAX | H MAX |
|---|---|---|
| A | 0.175 (4.45) | 0.350 (8.89) |
| B | 0.250 (6.35) | 0.450 (11.43) |
| C | 0.350 (8.89) | 0.610 (15.49) |
| D | 0.400 (10.16) | 0.740 (18.80) |

## MIL-PRF-49137 MARKING INFORMATION

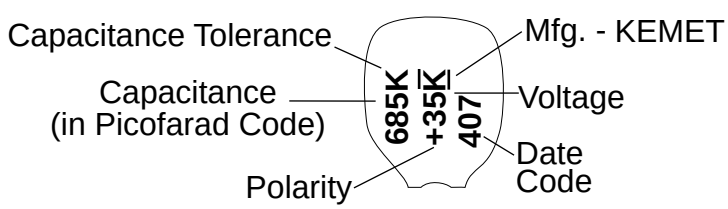


## MIL-PRF-49137/2 ORDERING INFORMATION

**CX 02 D 225 K**

**TYPE**
Capacitors, Fixed, Solid Tantalum
Conformal Coated, Non-hermetically Sealed.

**STYLE**
02 (T363) A, B, C & D Cases
12 (T369) A & B Cases Only

**VOLTAGE**

| Symbol | Rated (857C) Volts, dc | Surge (857C) Volts, dc |
|---|---|---|
| D | 6 | 8 |
| F | 10 | 13 |
| H | 15 | 20 |
| J | 20 | 26 |
| K | 25 | 32 |
| M | 35 | 46 |
| N | 50 | 65 |

**CAPACITANCE TOLERANCE**

| Symbol | Capacitance Tolerance |
|---|---|
| | Percent (±) |
| K | 10 |
| M | 20 |

**CAPACITANCE IN PICORARAD CODE**
The nominal capacitance value, expressed in picofarads (pF), is identified by a three-digit number; the first two digits represent significant figures and the last digit specifies the number of zeros to follow.

*For KEMET Ordering Information, see page 63.

## RATINGS & PART NUMBER REFERENCE

| CAPACITANCE µF | CASE SIZE | CAPACITANCE TOLERANCE ±% | T363, T369 KEMET PART NUMBER | D.C. LEAKAGE µA@25°C | MAX. DISSIPATION FACTOR %@25°C, 120Hz | CX02 (T363) MILITARY PART NUMBER | CX12 (T369) MILITARY PART NUMBER |
|---|---|---|---|---|---|---|---|
| **6 VOLT RATING AT 85°C** | | | | | | | |
| 6.8 | A | 10, 20 | T36(1)A685(2)006AS | 0.5 | 6 | CX02D685(2) | CX12D685(2) |
| 47.0 | B | 10, 20 | T36(1)B476(2)006AS | 2.3 | 6 | CX02D476(2) | CX12D476(2) |
| 68.0 | B | 10, 20 | T36(1)B686(2)006AS | 3.3 | 6 | CX02D686(2) | CX12D686(2) |
| 150.0 | C | 10, 20 | T363C157(2)006AS | 7.2 | 8 | CX02D157(2) | |
| 330.0 | D | 10, 20 | T363D337(2)006AS | 10.0 | 8 | CX02D337(2) | |
| **10 VOLT RATING AT 85°C** | | | | | | | |
| 4.7 | A | 10, 20 | T36(1)A475(2)010AS | 0.5 | 5 | CX02F475(2) | CX12F475(2) |
| 33.0 | B | 10, 20 | T36(1)B336(2)010AS | 2.6 | 6 | CX02F336(2) | CX12F336(2) |
| 100.0 | C | 10, 20 | T363C107(2)010AS | 8.0 | 8 | CX02F107(2) | |
| 220.0 | D | 10, 20 | T363D227(2)010AS | 10.0 | 8 | CX02F227(2) | |
| **15 VOLT RATING AT 85°C** | | | | | | | |
| 3.3 | A | 10, 20 | T36(1)A335(2)015AS | 0.5 | 5 | CX02H335(2) | CX12H335(2) |
| 22.0 | B | 10, 20 | T36(1)B226(2)015AS | 2.6 | 6 | CX02H226(2) | CX12H226(2) |
| 68.0 | C | 10, 20 | T363C686(2)015AS | 8.2 | 6 | CX02H686(2) | |
| 150.0 | D | 10, 20 | T363D157(2)015AS | 10.0 | 8 | CX02H157(2) | |
| **20 VOLT RATING AT 85°C** | | | | | | | |
| 2.2 | A | 10, 20 | T36(1)A225(2)020AS | 0.5 | 5 | CX02J225(2) | CX12J225(2) |
| 15.0 | B | 10, 20 | T36(1)B156(2)020AS | 2.4 | 6 | CX02J156(2) | CX12J156(2) |
| 47.0 | C | 10, 20 | T363C476(2)020AS | 7.5 | 6 | CX02J476(2) | |
| 100.0 | D | 10, 20 | T363D107(2)020AS | 10.0 | 8 | CX02J107(2) | |
| **25 VOLT RATING AT 85°C** | | | | | | | |
| 1.5 | A | 10, 20 | T36(1)A155(2)025AS | 0.5 | 5 | CX02K155(2) | CX12K155(2) |
| 10.0 | B | 10, 20 | T36(1)B106(2)025AS | 2.0 | 6 | CX02K106(2) | CX12K106(2) |
| 33.0 | C | 10, 20 | T363C336(2)025AS | 6.6 | 6 | CX02K336(2) | |
| 68.0 | D | 10, 20 | T363D686(2)025AS | 10.0 | 6 | CX02K686(2) | |
| **35 VOLT RATING AT 85°C** | | | | | | | |
| 6.8 | B | 10, 20 | T36(1)B685(2)035AS | 1.9 | 5 | CX02M685(2) | CX12M685(2) |
| 22.0 | C | 10, 20 | T363C226(2)035AS | 6.2 | 6 | CX02M226(2) | |
| 33.0 | D | 10, 20 | T363D336(2)035AS | 9.2 | 6 | CX02M336(2) | |
| 47.0 | D | 10, 20 | T363D476(2)035AS | 10.0 | 6 | CX02M476(2) | |
| **50 VOLT RATING AT 85°C** | | | | | | | |
| 0.1 | A | 10, 20 | T36(1)A104(2)050AS | 0.5 | 3 | CX02N104(2) | CX12N104(2) |
| 0.15 | A | 10, 20 | T36(1)A154(2)050AS | 0.5 | 3 | CX02N154(2) | CX12N154(2) |
| 0.22 | A | 10, 20 | T36(1)A224(2)050AS | 0.5 | 3 | CX02N224(2) | CX12N224(2) |
| 0.33 | A | 10, 20 | T36(1)A334(2)050AS | 0.5 | 3 | CX02N334(2) | CX12N334(2) |
| 0.47 | A | 10, 20 | T36(1)A474(2)050AS | 0.5 | 3 | CX02N474(2) | CX12N474(2) |
| 0.68 | A | 10, 20 | T36(1)A684(2)050AS | 0.5 | 3 | CX02N684(2) | CX12N684(2) |
| 1.0 | A | 10, 20 | T36(1)A105(2)050AS | 0.5 | 3 | CX02N105(2) | CX12N105(2) |
| 1.5 | B | 10, 20 | T36(1)B155(2)050AS | 0.6 | 5 | CX02N155(2) | CX12N155(2) |
| 2.2 | B | 10, 20 | T36(1)B225(2)050AS | 0.9 | 5 | CX02N225(2) | CX12N225(2) |
| 3.3 | B | 10, 20 | T36(1)B335(2)050AS | 1.3 | 5 | CX02N335(2) | CX12N335(2) |
| 4.7 | B | 10, 20 | T36(1)B475(2)050AS | 1.9 | 5 | CX02N475(2) | CX12N475(2) |
| 6.8 | C | 10, 20 | T363C685(2)050AS | 2.7 | 5 | CX02N685(2) | |
| 10.0 | C | 10, 20 | T363C106(2)050AS | 4.0 | 6 | CX02N106(2) | |
| 15.0 | C | 10, 20 | T363C156(2)050AS | 6.0 | 6 | CX02N156(2) | |
| 22.0 | D | 10, 20 | T363D226(2)050AS | 8.8 | 6 | CX02N226(2) | |

(1) To complete KEMET part number, insert Series Designation as follows: 3 - T363 (CX02); 9 - T369 (CX12)
(2) To complete KEMET or military part number, insert Capacitance Tolerance Symbol as follows:
M - ±20%, K - ±10%

### T368 CAPACITOR OUTLINE DRAWING

**C & D CASES**

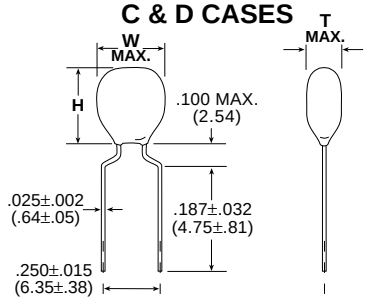


### T368
### DIMENSIONS — INCHES + (MILLIMETERS)

| CASE SIZE | TMAX | WMAX | HMAX |
|---|---|---|---|
| C | 0.250 (6.35) | 0.40 (10.16) | 0.42 (10.67) |
| D | 0.250 (6.35) | 0.460 (11.68) | 0.52 (13.20) |

## T368
## RATINGS AND PART NUMBER REFERENCE

| CAPACITANCE µF | CASE SIZE | KEMET PART NUMBER | D.C. LEAKAGE µA@25°C | MAX. DISSIPATION FACTOR %@25°C, 120Hz |
|---|---|---|---|---|
| **6 VOLT RATING AT 85°C** | | | | |
| 82.0 | C | T368C826(1)006A(2) | 3.9 | 8 |
| 100.0 | C | T368C107(1)006A(2) | 4.8 | 8 |
| 120.0 | C | T368C127(1)006A(2) | 5.8 | 8 |
| 150.0 | C | T368C157(1)006A(2) | 7.2 | 8 |
| 180.0 | D | T368D187(1)006A(2) | 8.6 | 8 |
| 220.0 | D | T368D227(1)006A(2) | 10.0 | 8 |
| 270.0 | D | T368D277(1)006A(2) | 10.0 | 8 |
| 330.0 | D | T368D337(1)006A(2) | 10.0 | 8 |
| **10 VOLT RATING AT 85°C** | | | | |
| 47.0 | C | T368C476(1)010A(2) | 3.8 | 6 |
| 56.0 | C | T368C566(1)010A(2) | 4.4 | 6 |
| 68.0 | C | T368C686(1)010A(2) | 5.4 | 6 |
| 82.0 | C | T368C826(1)010A(2) | 6.5 | 8 |
| 100.0 | C | T368C107(1)010A(2) | 8.0 | 8 |
| 120.0 | D | T368D127(1)010A(2) | 9.6 | 8 |
| 150.0 | D | T368D157(1)010A(2) | 10.0 | 8 |
| 180.0 | D | T368D187(1)010A(2) | 10.0 | 8 |
| 220.0 | D | T368D227(1)010A(2) | 10.0 | 8 |
| **15 VOLT RATING AT 85°C** | | | | |
| 27.0 | C | T368C276(1)015A(2) | 3.2 | 6 |
| 33.0 | C | T368C336(1)015A(2) | 4.0 | 6 |
| 39.0 | C | T368C396(1)015A(2) | 4.7 | 6 |
| 47.0 | C | T368C476(1)015A(2) | 5.6 | 6 |
| 56.0 | C | T368C566(1)015A(2) | 6.8 | 6 |
| 68.0 | C | T368C686(1)015A(2) | 8.2 | 6 |
| 82.0 | D | T368D826(1)015A(2) | 9.8 | 8 |
| 100.0 | D | T368D107(1)015A(2) | 10.0 | 8 |
| 120.0 | D | T368D127(1)015A(2) | 10.0 | 8 |
| 150.0 | D | T368D157(1)015A(2) | 10.0 | 8 |
| **20 VOLT RATING AT 85°C** | | | | |
| 18.0 | C | T368C186(1)020A(2) | 2.8 | 6 |
| 22.0 | C | T368C226(1)020A(2) | 3.5 | 6 |
| 27.0 | C | T368C276(1)020A(2) | 4.3 | 6 |
| 33.0 | C | T368C336(1)020A(2) | 5.3 | 6 |
| 39.0 | C | T368C396(1)020A(2) | 6.2 | 6 |
| 47.0 | C | T368C476(1)020A(2) | 7.5 | 6 |
| 56.0 | D | T368D566(1)020A(2) | 8.9 | 6 |
| 68.0 | D | T368D686(1)020A(2) | 10.0 | 6 |
| 82.0 | D | T368D826(1)020A(2) | 10.0 | 8 |
| 100.0 | D | T368D107(1)020A(2) | 10.0 | 8 |

| CAPACITANCE µF | CASE SIZE | KEMET PART NUMBER | D.C. LEAKAGE µA@25°C | MAX. DISSIPATION FACTOR %@25°C, 120Hz |
|---|---|---|---|---|
| **25 VOLT RATING AT 85°C** | | | | |
| 12.0 | C | T368C126(1)025A(2) | 2.4 | 6 |
| 15.0 | C | T368C156(1)025A(2) | 3.0 | 6 |
| 18.0 | C | T368C186(1)025A(2) | 3.6 | 6 |
| 22.0 | C | T368C226(1)025A(2) | 4.4 | 6 |
| 27.0 | C | T368C276(1)025A(2) | 5.4 | 6 |
| 33.0 | C | T368C336(1)025A(2) | 6.6 | 6 |
| 39.0 | D | T368D396(1)025A(2) | 7.8 | 6 |
| 47.0 | D | T368D476(1)025A(2) | 9.4 | 6 |
| 56.0 | D | T368D566(1)025A(2) | 10.0 | 6 |
| 68.0 | D | T368D686(1)025A(2) | 10.0 | 6 |
| **35 VOLT RATING AT 85°C** | | | | |
| 8.2 | C | T368C825(1)035A(2) | 2.3 | 6 |
| 10.0 | C | T368C106(1)035A(2) | 2.8 | 6 |
| 12.0 | C | T368C126(1)035A(2) | 3.3 | 6 |
| 15.0 | C | T368C156(1)035A(2) | 4.2 | 6 |
| 18.0 | C | T368C186(1)035A(2) | 5.0 | 6 |
| 22.0 | C | T368C226(1)035A(2) | 6.2 | 6 |
| 27.0 | D | T368D276(1)035A(2) | 7.5 | 6 |
| 33.0 | D | T368D336(1)035A(2) | 9.2 | 6 |
| 39.0 | D | T368D396(1)035A(2) | 10.0 | 6 |
| 47.0 | D | T368D476(1)035A(2) | 10.0 | 6 |
| **50 VOLT RATING AT 85°C** | | | | |
| 5.6 | C | T368C565(1)050A(2) | 2.2 | 5 |
| 6.8 | C | T368C685(1)050A(2) | 2.7 | 5 |
| 8.2 | C | T368C825(1)050A(2) | 3.2 | 6 |
| 10.0 | C | T368C106(1)050A(2) | 4.0 | 6 |
| 12.0 | C | T368C126(1)050A(2) | 4.8 | 6 |
| 15.0 | C | T368C156(1)050A(2) | 6.0 | 6 |
| 18.0 | D | T368D186(1)050A(2) | 7.2 | 6 |
| 22.0 | D | T368D226(1)050A(2) | 8.8 | 6 |

(1) To complete KEMET part number, insert capacitance tolerance K– ±10%, M– ±20%, or J– ±5% (Available on special order).

(2) To complete KEMET part number, insert lead material designation: S = SnPb (tin/lead) and T = 100% Sn (tin).

*** For Ordering and Marking Information refer to page 63.**

**Effective June 30, 2005 T368 Series is RoHS Compliant.**

# TANTALUM DIPPED / 3 LEADED

## T396 & T398 SERIES "ULTRADIP III"

KEMET UltraDip III Capacitors offer the advantages of solid tantalum construction and a "fail-safe" insertion mechanism. The three-leaded design (the anode is in the center) enables operators to insert the capacitors into printed circuit boards correctly without having to visually determine polarity. This timesaving device also eliminates board damage that may result from incorrect insertion.

The UltraDip III Series features a capacitance range of 0.1 to 680 µF at 3 to 50 VDC. These miniature dipped solid tantalum capacitors are encased in a tough plastic barrier coating that maintains the precise lead wire spacing within ±0.015 inch. The gold color epoxy permits laser markings with outstanding permanency and legibility. All case sizes are printed with capacitance, voltage and vendor I.D.

The UltraDip III Series from KEMET Capacitors exhibit low DCL, ESR and Impedance and have excellent temperature stability. These capacitors may be ordered with precut leads (see drawing for lengths) or in KEMET Capacitor ARIS packaging (leads taped and on reels) for high speed automatic insertion equipment.

**Effective June 30, 2005 the T396 and T398 Series are RoHS Compliant.**

## CAPACITOR OUTLINE DRAWING

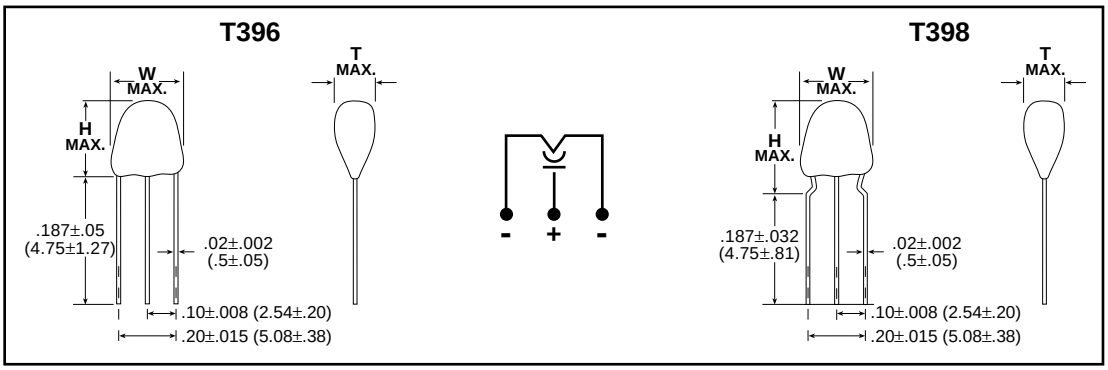


## DIMENSIONS—INCHES & (MILLIMETERS)

| | | Both | | T396 | T398 |
|---|---|---|---|---|---|
| Series | Case Size | W Width | T Thickness | H* Height | H* Height |
| T396/T398 | A | .280 (7.1) | .190 (4.8) | .310 (7.9) | .355 (9.0) |
| T396/T398 | B | .280 (7.1) | .190 (4.8) | .320 (8.1) | .365 (9.3) |
| T396/T398 | C | .280 (7.1) | .200 (5.1) | .360 (9.1) | .390 (9.9) |
| T396/T398 | D | .280 (7.1) | .200 (5.1) | .370 (9.4) | .390 (9.9) |
| T396/T398 | E | .280 (7.1) | .230 (5.8) | .380 (9.7) | .415 (10.5) |
| T396/T398 | F | .280 (7.1) | .240 (6.1) | .410 (10.4) | .430 (10.9) |
| T396/T398 | G | .280 (7.1) | .250 (6.3) | .420 (10.7) | .440 (11.2) |
| T396/T398 | H | .280 (7.1) | .270 (6.9) | .420 (10.7) | .440 (11.2) |
| T396/T398 | J | .300 (7.6) | .300 (7.6) | .460 (11.7) | .480 (12.2) |
| T396/T398 | K | .340 (8.6) | .340 (8.6) | .500 (12.7) | .500 (12.7) |
| T396/T398 | L | .340 (8.6) | .340 (8.6) | .560 (14.2) | .580 (14.7) |
| T396/T398 | M | .360 (9.1) | .360 (9.1) | .620 (15.7) | .620 (15.7) |

*NOTE: "H" dimensions are from seating plane to top of capacitor.

## CAPACITOR MARKING

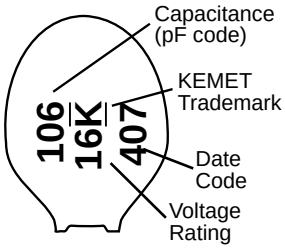


## ORDERING INFORMATION

T 39X A 105 M 035 A S

**TANTALUM**

**SERIES**
T396 Straight leads
T398 Standoff leads

**CASE SIZE**
A, B, C, D, E, F, G, H, J, K, L & M

**PICOFARAD CODE**
First two digits are significant figures. Third figure is the number of zeros following.

**LEAD MATERIAL**
S — Sn/Pb (tin/lead)
T– 100% Sn (tin)

**FAILURE RATE LEVEL**
A — Not Applicable

**VOLTAGE RATING**
For 6.3 Volts use 006

**CAPACITANCE TOLERANCE**
M — ±20% (K — 10% Special Order Only)

## RATINGS & PART NUMBER REFERENCE

| CAPACITANCE µF | CASE SIZE | KEMET PART NUMBER | D.C. LEAKAGE µA@25°C | MAX. DISSIPATION FACTOR %@25°C, 120Hz |
|---|---|---|---|---|
| **3 VOLT RATING AT 85°C — 2 VOLT RATING AT 125°C** | | | | |
| 4.7 | A | T39(1)A475(2)003A(3) | 0.5 | 5 |
| 6.8 | A | T39(1)A685(2)003A(3) | 0.5 | 5 |
| 10.0 | A | T39(1)A106(2)003A(3) | 0.5 | 6 |
| 15.0 | B | T39(1)B156(2)003A(3) | 0.5 | 6 |
| 22.0 | C | T39(1)C226(2)003A(3) | 0.5 | 6 |
| 33.0 | D | T39(1)D336(2)003A(3) | 0.8 | 6 |
| 47.0 | E | T39(1)E476(2)003A(3) | 1.1 | 6 |
| 68.0 | F | T39(1)F686(2)003A(3) | 1.6 | 6 |
| 100.0 | G | T39(1)G107(2)003A(3) | 2.4 | 8 |
| 150.0 | H | T39(1)H157(2)003A(3) | 3.6 | 8 |
| 220.0 | J | T39(1)J227(2)003A(3) | 5.3 | 8 |
| 330.0 | K | T39(1)K337(2)003A(3) | 7.9 | 8 |
| 470.0 | L | T39(1)L477(2)003A(3) | 10.0 | 9 |
| 680.0 | M | T39(1)M687(2)003A(3) | 10.0 | 9 |
| **10 VOLT RATING AT 85°C — 7 VOLT RATING AT 125°C** | | | | |
| 2.2 | A | T39(1)A225(2)010A(3) | 0.5 | 5 |
| 3.3 | A | T39(1)A335(2)010A(3) | 0.5 | 5 |
| 4.7 | A | T39(1)A475(2)010A(3) | 0.5 | 5 |
| 6.8 | B | T39(1)B685(2)010A(3) | 0.5 | 5 |
| 10.0 | C | T39(1)C106(2)010A(3) | 0.8 | 6 |
| 15.0 | E | T39(1)E156(2)010A(3) | 1.2 | 6 |
| 22.0 | E | T39(1)E226(2)010A(3) | 1.8 | 6 |
| 33.0 | F | T39(1)F336(2)010A(3) | 2.6 | 6 |
| 47.0 | H | T39(1)H476(2)010A(3) | 3.8 | 6 |
| 68.0 | H | T39(1)H686(2)010A(3) | 5.4 | 6 |
| 100.0 | J | T39(1)J107(2)010A(3) | 8.0 | 8 |
| 150.0 | K | T39(1)K157(2)010A(3) | 10.0 | 8 |
| 220.0 | I | T39(1)L227(2)010A(3) | 10.0 | 8 |
| **20 VOLT RATING AT 85°C — 13 VOLT RATING AT 125°C** | | | | |
| 1.0 | A | T39(1)A105(2)020A(3) | 0.5 | 3 |
| 1.5 | A | T39(1)A155(2)020A(3) | 0.5 | 5 |
| 2.2 | A | T39(1)A225(2)020A(3) | 0.5 | 5 |
| 3.3 | B | T39(1)B335(2)020A(3) | 0.5 | 5 |
| 4.7 | C | T39(1)C475(2)020A(3) | 0.8 | 5 |
| 6.8 | D | T39(1)D685(2)020A(3) | 1.1 | 5 |
| 10.0 | E | T39(1)E106(2)020A(3) | 1.6 | 6 |
| 15.0 | F | T39(1)F156(2)020A(3) | 2.4 | 6 |
| 22.0 | G | T39(1)G226(2)020A(3) | 3.5 | 6 |
| 33.0 | J | T39(1)J336(2)020A(3) | 5.3 | 6 |
| 47.0 | K | T39(1)K476(2)020A(3) | 7.5 | 6 |
| 68.0 | L | T39(1)L686(2)020A(3) | 10.0 | 6 |
| 100.0 | M | T39(1)M107(2)020A(3) | 10.0 | 8 |
| **35 VOLT RATING AT 85°C — 23 VOLT RATING AT 125°C** | | | | |
| 0.10 | A | T39(1)A104(2)035A(3) | 0.5 | 3 |
| 0.15 | A | T39(1)A154(2)035A(3) | 0.5 | 3 |
| 0.22 | A | T39(1)A224(2)035A(3) | 0.5 | 3 |
| 0.33 | A | T39(1)A334(2)035A(3) | 0.5 | 3 |
| 0.47 | A | T39(1)A474(2)035A(3) | 0.5 | 3 |
| 0.68 | A | T39(1)A684(2)035A(3) | 0.5 | 3 |
| 1.0 | A | T39(1)A105(2)035A(3) | 0.5 | 3 |
| 1.5 | B | T39(1)B155(2)035A(3) | 0.5 | 5 |
| 2.2 | C | T39(1)C225(2)035A(3) | 0.6 | 5 |
| 3.3 | D | T39(1)D335(2)035A(3) | 0.9 | 5 |
| 4.7 | E | T39(1)E475(2)035A(3) | 1.3 | 5 |
| 6.8 | F | T39(1)F685(2)035A(3) | 1.9 | 5 |
| 10.0 | G | T39(1)G106(2)035A(3) | 2.8 | 6 |
| 15.0 | J | T39(1)J156(2)035A(3) | 4.2 | 6 |
| 22.0 | K | T39(1)K226(2)035A(3) | 6.2 | 6 |
| 33.0 | L | T39(1)L336(2)035A(3) | 9.2 | 6 |
| 47.0 | M | T39(1)M476(2)035A(3) | 10.0 | 6 |

| CAPACITANCE µF | CASE SIZE | KEMET PART NUMBER | D.C. LEAKAGE µA@25°C | MAX. DISSIPATION FACTOR %@25°C, 120Hz |
|---|---|---|---|---|
| **6.3 VOLT RATING AT 85°C — 4 VOLT RATING AT 125°C** | | | | |
| 3.3 | A | T39(1)A335(2)006A(3) | 0.5 | 5 |
| 4.7 | A | T39(1)A475(2)006A(3) | 0.5 | 5 |
| 6.8 | A | T39(1)A685(2)006A(3) | 0.5 | 5 |
| 10.0 | B | T39(1)B106(2)006A(3) | 0.5 | 6 |
| 15.0 | C | T39(1)C156(2)006A(3) | 0.7 | 6 |
| 22.0 | D | T39(1)D226(2)006A(3) | 1.1 | 6 |
| 33.0 | E | T39(1)E336(2)006A(3) | 1.6 | 6 |
| 47.0 | F | T39(1)F476(2)006A(3) | 2.3 | 6 |
| 68.0 | G | T39(1)G686(2)006A(3) | 3.3 | 6 |
| 100.0 | H | T39(1)H107(2)006A(3) | 4.8 | 8 |
| 150.0 | J | T39(1)J157(2)006A(3) | 7.2 | 8 |
| 220.0 | K | T39(1)K227(2)006A(3) | 10.0 | 8 |
| 330.0 | L | T39(1)L337(2)006A(3) | 10.0 | 8 |
| **16 VOLT RATING AT 85°C — 10 VOLT RATING AT 125°C** | | | | |
| 1.5 | A | T39(1)A155(2)016A(3) | 0.5 | 5 |
| 2.2 | A | T39(1)A225(2)016A(3) | 0.5 | 5 |
| 3.3 | A | T39(1)A335(2)016A(3) | 0.5 | 5 |
| 4.7 | B | T39(1)B475(2)016A(3) | 0.6 | 5 |
| 6.8 | C | T39(1)C685(2)016A(3) | 0.9 | 5 |
| 10.0 | E | T39(1)E106(2)016A(3) | 1.3 | 6 |
| 15.0 | E | T39(1)E156(2)016A(3) | 1.8 | 6 |
| 22.0 | F | T39(1)F226(2)016A(3) | 2.6 | 6 |
| 33.0 | H | T39(1)H336(2)016A(3) | 4.0 | 6 |
| 47.0 | J | T39(1)J476(2)016A(3) | 5.6 | 6 |
| 68.0 | K | T39(1)K686(2)016A(3) | 8.2 | 6 |
| 100.0 | L | T39(1)L107(2)016A(3) | 10.0 | 8 |
| 150.0 | M | T39(1)M157(2)016A(3) | 10.0 | 8 |
| **25 VOLT RATING AT 85°C — 16.5 VOLT RATING AT 125°C** | | | | |
| 1.0 | A | T39(1)A105(2)025A(3) | 0.5 | 3 |
| 1.5 | A | T39(1)A155(2)025A(3) | 0.5 | 5 |
| 2.2 | B | T39(1)B225(2)025A(3) | 0.5 | 5 |
| 3.3 | B | T39(1)B335(2)025A(3) | 0.7 | 5 |
| 4.7 | C | T39(1)C475(2)025A(3) | 0.9 | 5 |
| 6.8 | E | T39(1)E685(2)025A(3) | 1.4 | 5 |
| 10.0 | E | T39(1)E106(2)025A(3) | 2.0 | 6 |
| 15.0 | G | T39(1)G156(2)025A(3) | 3.0 | 6 |
| 22.0 | H | T39(1)H226(2)025A(3) | 4.4 | 6 |
| 33.0 | J | T39(1)J336(2)025A(3) | 6.6 | 6 |
| 47.0 | K | T39(1)K476(2)025A(3) | 9.4 | 6 |
| 68.0 | L | T39(1)L686(2)025A(3) | 10.0 | 6 |
| **50 VOLT RATING AT 85°C — 33 VOLT RATING AT 125°C** | | | | |
| 0.10 | A | T39(1)A104(2)050A(3) | 0.5 | 3 |
| 0.15 | A | T39(1)A154(2)050A(3) | 0.5 | 3 |
| 0.22 | A | T39(1)A224(2)050A(3) | 0.5 | 3 |
| 0.33 | A | T39(1)A334(2)050A(3) | 0.5 | 3 |
| 0.47 | B | T39(1)B474(2)050A(3) | 0.5 | 3 |
| 0.68 | B | T39(1)B684(2)050A(3) | 0.5 | 3 |
| 1.0 | B | T39(1)B105(2)050A(3) | 0.5 | 3 |
| 1.5 | E | T39(1)E155(2)050A(3) | 0.6 | 5 |
| 2.2 | E | T39(1)E225(2)050A(3) | 0.9 | 5 |
| 3.3 | F | T39(1)F335(2)050A(3) | 1.3 | 5 |
| 4.7 | G | T39(1)G475(2)050A(3) | 1.9 | 5 |
| 6.8 | J | T39(1)J685(2)050A(3) | 2.7 | 5 |
| 10.0 | K | T39(1)K106(2)050A(3) | 4.0 | 6 |
| 15.0 | L | T39(1)L156(2)050A(3) | 6.0 | 6 |
| 22.0 | M | T39(1)M226(2)050A(3) | 8.8 | 6 |

(1) To complete KEMET Part Number, insert Series Designation as follows: "6" = T396, "8" = T398.
(2) To complete KEMET Part Number, insert Capacitance Tolerance Symbol as follows: "M" = ±20%, "K" = ±10%.
(3) To complete KEMET Part Number, insert Lead Material Designation: S = SnPb (tin/lead) and T = 100% Sn (tin).

NOTE: Higher voltage/tigher tolerance products may be shipped, at KEMET's option, within the same case size.



KEMET Electronics Corporation, P.O. Box 5928, Greenville, S.C. 29606 (864) 963-6300

## *Tantalum Axial*
## Lead Tape and Reel Packaging

KEMET offers standard reeling of Solid Tantalum Capacitors for automatic insertion or lead forming machines per EIA Specification RS-296E.

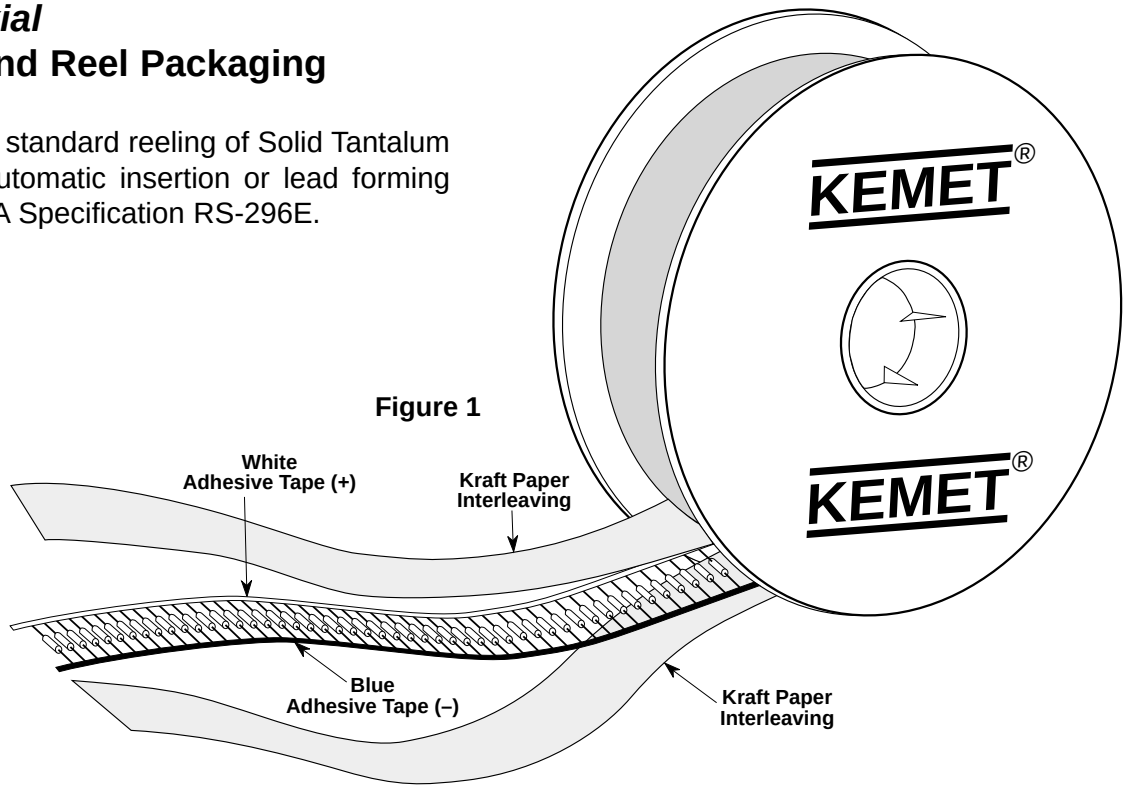


**Figure 1**

**Figure 2**

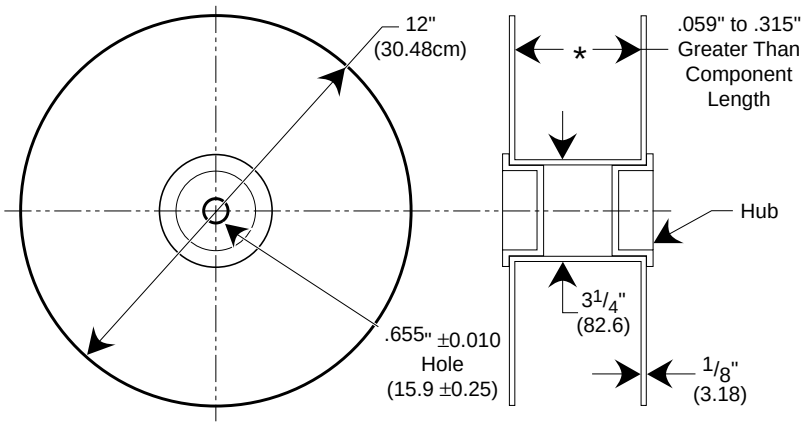


**Figure 3**

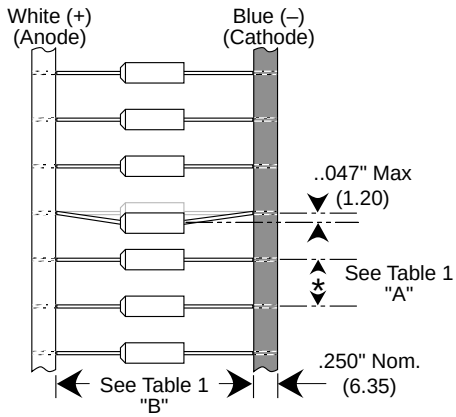


**Table 1** **Dimensions in Inches & (Millimeters)**

| COMPONENT BODY DIAMETER | COMPONENT PITCH "A" | INSIDE TAPE SPACING "B" ±1.5mm (0.059") | | |
|---|---|---|---|---|
| | 0.020" or (±0.5mm) | I | II | III |
| 0" (0mm) to 0.197" (5mm) | 0.200" or (5mm) | 2.062" | 2.500" | 2.874" |
| 0.197" (5.01mm) to 0.394" (10mm) | 0.400" or (10mm) | (52.4mm) | (63.5mm) | (73mm) |

Capacitors are reeled so that positive leads are oriented as shown in Figure 3. Kraft paper (50lb. test minimum) is inserted between the layers of capacitors wound on reels for component pitch ≤0.200" sizes and corrugated paper (70 lb. test minimum), single faced is inserted for component pitch ≥0.400" sizes. Capacitor lead length may extend only a maximum of .031" (0.8 mm) beyond the tape's edges. Capacitors are centered in a row between the two tapes and will deviate only ±0.031" (0.79 mm) from the row center. Figures 1 and 2 show the KEMET standard chipboard tape reel. A minimum of 36" (91.5 cm) leader tape is provided at each end of the reeled capacitors. Universal splicing clips are used to connect the tape. Standard reel quantities are shown on page 73.

# PACKAGING INFORMATION

KEMET offers Solid Tantalum Capacitors fully compatible for use with automatic insertion machines for radial-lead components. Aris Reeling meets all requirements of EIA Standard RS-468. KEMET capacitors are wound on a precision made ARIS Reel Package. ARIS Ammo Package is also available.

## *Tantalum Dipped Radial – ARIS Specification (Automatic Radial Insertion System)*

### Tantalum Dipped Tape and Reel Dimensions in Millimeters & (Inches)

| Dimension | Symbol | Nominal mm (inch) | Tolerance mm (inch) |
|---|---|---|---|
| Body Height (1) | A | 17.0 (0.67) | Maximum |
| Body Width (1) | $A_1$ | 10.2 (0.40) | Maximum |
| Sprocket Hole Diameter | $D_0$ | 4.0 (.157) | ± 0.3 (±.012) |
| Lead Diameter | d | 0.51 or 0.64 (.020) (.025) | ± 0.05 (.002) |
| Lead Center (4) | F | See Note Below | |
| Component Base to Tape Center (4) | H | C-7301 C-7303 16.0 (.630) 18.0 (.709) | C-7301 C-7303 ±0.5 (±.020) Minimum |
| Lead Standoff Height | $H_0$ | C-7301 C-7303 16.0 (.630) 18.0 (.709) | C-7301 C-7303 ±0.5 (±.020) Minimum |
| Component Height Above Tape Center | $H_1$ | 32.25 (1.270) | Maximum |
| Component Alignment Front to Rear | Δ H | 0 | 1.0 (.039) |
| Cut Out Length | L | 11.0 (.433) | Maximum |
| Lead Protrusion | $L_1$ | 1.0 (.039) | Maximum |

| Dimension | Symbol | Nominal mm (inch) | Tolerance mm (inch) |
|---|---|---|---|
| Component Pitch (5) | P | 12.7 (.500) | ± 1.0 (± .039) |
| Sprocket Hole Pitch (2) | $P_0$ | 12.7 (.500) | ± 0.3 (±.012) |
| Sprocket Hole Center to Lead Center (3) (4) | $P_1$ | See Note Below | ± 0.7 (±.028) |
| Sprocket Hole Center to Component (5) Center | $P_2$ | See Note Below | |
| Body Thickness | $T_0$ | 10.2 (.400) | Maximum |
| Total Tape Thickness | T | 0.7 (0.28) | ± .02 (.008) |
| Carrier Tape Width | W | 18.0 (.709) | + 1.0/-0.5 (+.039/-.020) |
| Hold-Down Tape Width | $W_0$ | 15mm or 6mm (.561) (.236) | + 1.0/-0.8 (+.039/-.031) |
| Sprocket Hole Location | $W_1$ | 9.0 (.354) | +.075/-0.5 (+.030/-.020) |
| Hold-Down Tape Location | $W_2$ | 12mm (.472) | Maximum |

Notes: (1) See page 62 for T35X and page 69 for T39X specific dimensions.
(2) Cumulative pitch error ± 1.0mm (.039) maximum in 20 consecutive sprocket hole locations.
(3) Measured at bottom of standoff.
(4) $P_1$ and F measured at egress from carrier tape.
(5) P and $P_2$ measured at egress from carrier tape.

On polar devices, the positive (+) lead exits from container first.
* Lead spacings are 2.5mm (.098") center-to-center (T350 A-H)
** Lead spacings are 5.0mm (.197") center-to-center
\# Lead spacings are 6.35mm (.25") center-to-center
\+ Lead spacings are 3.18mm (.125") center-to-center

***F Dimensions:***
0.100" ± .015
0.125" ± .015
0.200" ± .015
0.250" ± .015"
0.100 " ± .015 (3 leaded)

***P1 Dimensions:***
Lead Spacing
0.100" – 0.200 ± .028"
0.125" – 0.187 ± .028"
0.200" – 0.150 ± .028"
0.250" – 0.125 ± .028"
0.100" – 0.100 ± .028" ( 3 leaded)

① T396/8*
② T350/1*
③ T352/3/6**
④ T354#
⑤ T355+

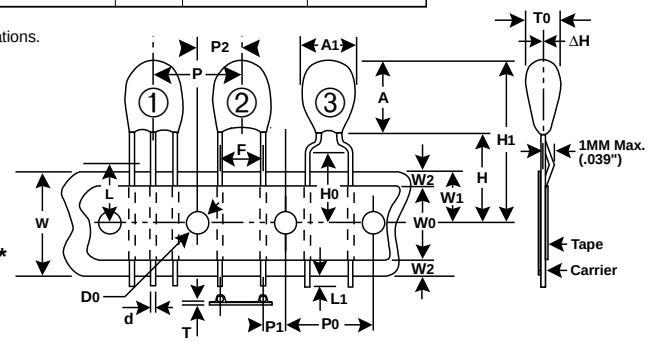


## *Tantalum Molded Radial – ARIS Specification (Automatic Radial Insertion System)*

### Tantalum Molded Tape and Reel Dimensions in Millimeters & (Inches)

| Dimension | Symbol | Nominal mm (inch) | Tolerance mm (inch) |
|---|---|---|---|
| Body Height (1) | A | 10.50 (.413) | ± .38 (±.015) Maximum |
| Body Width (1) | $A_1$ | 15.24 (.600) | Maximum ± .38 ± (.015) |
| Sprocket Hole Diameter | $D_0$ | 4.0 (.157) | ± 0.3 (± .012) |
| Lead Diameter | d | 0.51 or 0.64 (.020) (.025) | ± 0.05 or ± .03 (± .001) |
| Lead Center (5) | F | 5.0 2.5 (.197) (.098) | + 0.8/ - 0.2 (+ .032/ -.008) |
| Component Base to Tape Center (2)(4)(6) | H | 16.0 - 21.0 (.630 - .827) | Reference Only |
| Lead Standoff Height | $H_0$ | N/A | |
| Component Height Above Tape Center | $H_1$ | 32.25 (1.270) | Maximum |
| Component Alignment Front to Rear | Δ H | 0 | ± 2.0 (± .079) |
| Cut Out Length | L | 11.0 (.433) | Maximum |
| Lead Protrusion | $L_1$ | 2.0 (.079) | Maximum |

| Dimension | Symbol | Nominal mm (inch) | Tolerance mm (inch) |
|---|---|---|---|
| Component Pitch (5) | P | 12.7 (.500) | ± 1.0 (± .039) |
| Sprocket Hole Pitch (3) | $P_0$ | 12.7 (.500) | ± 0.3 (±.012) |
| Sprocket Hole Center to Lead Center (4) (5) | $P_1$ | 3.85 4.76 5.1 (.152) (.188) (.201) | ± 0.7 (±.028) |
| Sprocket Hole Center to Component Center | $P_2$ | 6.35 (.250) | ± 1.3 (±.051) |
| Body Thickness | $T_0$ | 6.35 (.250) | ± 1.3 Maximum |
| Total Tape Thickness | T | 0.7 (0.28) | ± .02 (±.008) |
| Carrier Tape Width | W | 18.0 (.709) | + 1.0/-0.5 (+.039/-.020) |
| Hold-Down Tape Width | $W_0$ | 15 or 6 (.561) (.236) | + 1.0/-0.8 (+.039/.031) |
| Sprocket Hole Location | $W_1$ | 9.0 (.354) | +.075/-0.5 (+.030/-.020) |
| Hold-Down Tape Location | $W_2$ | 3.0 or 12.0 (.118) (.472) | Maximum |

Notes: (1) See page 50 for T330, page 53 for T340 and page 59 for T35X specific dimensions.
(2) Reference Only
(3) Cumulative pitch error ± 1.0mm (.039") maximum in 20 consecutive sprocket hole locations.
(4) Measured at bottom of standoff.
(5) P, P1 and F measured at egress from carrier tape.
(6) H dimensions for T370 D and E 16.5mm ± 0.5mm (0.650" ± 0.020")

On polar devices, the positive (+) lead exits from container first.
* Lead spacings are 2.5mm (.098") center-to center
** Lead spacings are 5.0mm (.197") center-to-center.

① T370
② T340**
③ T330**

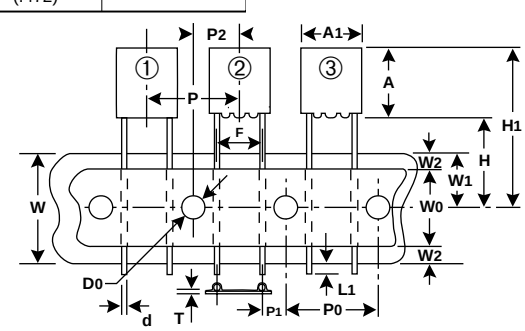



KEMET Electronics Corporation, P.O. Box 5928, Greenville, S.C. 29606 (864) 963-6300

## TANTALUM PACKAGING

| KEMET(1) Number | Military Style | Military Specification | Case Size | Standard Bulk(2) Quantity | Standard Reel Quantity | Reel Size | Standard Reeling Spec. | Ammo Pack Quantity | Ammo Pack Spec. |
|---|---|---|---|---|---|---|---|---|---|
| T110/T212, | CSR13 | MIL-C-39003/1 | A | 150/Box | 3500 | 12" | C-7200 | 1500 | C-7293 |
| T140/T242, | CSR23 | MIL-C-39003/3 | B | 75/Box | 2500 | 12" | C-7200 | 1000 | Class I |
| T252, | CSR33 | MIL-C-39003/6 | C | 20/Tray | 500 | 12" | C-7200 | 250 | C-7442 |
| T262 | CSR21 | MIL-C-39003/9 | D | 20/Tray | 400 | 12" | C-7200 | 250 | Class II |
| | | | | | | | | | C-7443 |
| | | | | | | | | | Class III |
| | | | | | | | | | See Page 71 |
| | | | | | | | | | for class info. |
| T111/T213 | CSR91 | MIL-C-39003/4 | A | 60/Box | 3000 | 12" | C-7200 | N/A | N/A |
| | | | B | 30/Box | 2000 | 12" | C-7200 | | |
| | | | C | 10/Card | N/A | N/A | N/A | | |
| | | | D | 10/Card | N/A | N/A | N/A | | |
| T210, | | | A | 40/Tray | 3500 | 12" | C-7200 | N/A | N/A |
| T216, | CSS13 | MIL-C-39003/10 | B | 30/Tray | 2500 | 12" | C-7200 | N/A | N/A |
| T240, | | | C | 20/Tray | 500 | 12" | C-7200 | N/A | N/A |
| T256 | CSS33 | MIL-C-39003/10 | D | 20/Tray | 400 | 12" | C-7200 | N/A | N/A |
| T222 | CSR09 | MIL-C-39003/2 | A/B | 50/Tray | N/A | N/A | N/A | N/A | N/A |
| | | | A | 300/Box | N/A | N/A | N/A | N/A | |
| | | | B | 150/Box | | | | | |
| T322/T323 | CX01, | MIL-C-49137/1 & 5 | A | 300 | 4500 | 12" | C-7200 | 2000 | C-7293 |
| | CX05 | | B | 250 | 4000 | 12" | C-7200 | 2000 | Class I |
| | | | C | 100 | 2500 | 12" | C-7200 | 1000 | C-7442 |
| | | | D | 100 | 2500 | 12" | C-7200 | 1000 | Class II |
| | | | E | 100 | 500 | 12" | C-7200 | 250 | C-7443 |
| | | | F | 100 | 500 | 12" | C-7200 | 250 | Class III |
| | | | | | | | | | See Page 71 |
| T330 | | | A | 400 | 1000 | 12" | C-7301 | 1600 | |
| | | | B | 300 | 1000 | 12" | C-7301 | 1200 | |
| | | | C | 200 | 1000 | 12" | C-7301 | 1200 | |
| | | | D | 100 | N/A | N/A | N/A | N/A | |
| T340 | | | A | 300 | 1000 | 12" | C-7301 | 1600 | |
| | | | B | 300 | 1000 | 12" | C-7301 | 1500 | |
| | | | C | 200 | 1000 | 12" | C-7301 | 1500 | |
| | | | D | 100 | 250 | 12" | C-7301 | 450 | |
| | | | E | 50 | 150 | 12" | C-7301 | N/A | |
| | | | F | 100 | N/A | N/A | N/A | N/A | |
| T350, | | | A | 1000 | 1500 | 12" | C-7301/7303 | 2500 | |
| T351, | | | B | 1000 | 1500 | 12" | C-7301/7303 | 2500 | |
| T352, | | | C | 1000 | 1500 | 12" | C-7301/7303 | 2500 | |
| T353, | | | D | 1000 | 1000 | 12" | C-7301/7303 | 2000 | |
| T354, | | | E | 1000 | 1000 | 12" | C-7301/7303 | 2000 | |
| T355, | | | F | 500 | 1000 | 12" | C-7301/7303 | 1500 | |
| T356 | | | G | 500 | 1000 | 12" | C-7301/7303 | 1500 | |
| | | | H | 500 | 800 | 12" | C-7301/7303 | 1500 | |
| | | | J | 100 | 800 | 12" | C-7301/7303 | 800 | |
| | | | K | 100 | 500 | 12" | C-7301/7303 | 800 | |
| | | | L, M | 100 | 500 | 12" | See Page 72 | 500 | |

**NOTE:** (1) Each KEMET number in its section applies to all case sizes. (2) Standard packaging refers to number of pieces per bag, box, tray or vial.

## TANTALUM PACKAGING (Continued)

| KEMET(1) Number | Military Style | Military Specification | Case Size | Standard Bulk(2) Quantity | Standard Reel Quantity | Reel Size | Standard Reeling Spec. | Ammo Packs |
|---|---|---|---|---|---|---|---|---|
| T363 | CX02 | MIL-C-49137/2 | A | 1000 | 1500 | 12” | C-7301/7303 | 2500 |
| | | | B | 1000 | 1500 | 12” | C-7301/7303 | 2000 |
| | | | C | 500 | 500 | 12” | C-7301/7303 | 800 |
| | | | D | 500 | 500 | 12” | See Page 72 | 800 |
| T368 | | | C | 500 | 500 | 12” | C-7301/7303 | 800 |
| | | | D | 500 | 500 | 12” | C-7301/7303 | 800 |
| T369 | CX12 | MIL-C-49137/2 | A | 1000 | 1500 | 12” | C-7301/7303 | 2500 |
| | | | B | 1000 | 1500 | 12” | C-7301/7303 | 2000 |
| T370 | | | C | 500 | N/A | N/A | N/A | N/A |
| | | | D | 500 | 1000 | 12” | C-7301 | N/A |
| | | | E | 500 | 1000 | 12” | C-7301 | N/A |
| | | | F | 250 | N/A | N/A | N/A | N/A |
| T378 | CX06 | MIL-C-49137/6 | D | 200 | 1000 | 12” | C-7301 | N/A |
| | | | E | 180 | 1000 | 12” | C-7301 | N/A |
| | | | F | 50 | N/A | N/A | N/A | N/A |
| T396, T398 | | | A-B | 1000 | 1500 | 12” | C-7301/7303 | 2000 |
| | | | C | 500 | 1500 | 12” | C-7301/7303 | 2000 |
| | | | D-F | 500 | 1000 | 12” | C-7301/7303 | 1500 |
| | | | G | 500 | 1000 | 12” | C-7301/7303 | 2000 |
| | | | H | 500 | 800 | 12” | C-7301/7303 | 2000 |
| | | | J | 250 | 800 | 12” | C-7301/7303 | 1600 |
| | | | K | 250 | 500 | 12” | C-7301/7303 | 800 |
| | | | L-M | 250 | 500 | 12” | C-7301/7303 | 500 |

**NOTE:** (1) Standard packaging refers to number of pieces per bag, box, tray or vial. (2) Quantity varies. For further details, please consult the factory.

## INTRODUCTION

KEMET solid tantalum capacitors are identified by the initial "T," followed by a unique "Series" number; for example, T110, T322, T350, etc. Each Series denotes a general physical form and type of encapsulation, as well as limits on dimensions and certain electrical characteristics under standard conditions of 25°C, 50% relative humidity, and one atmosphere pressure. Specific requirements are set forth in the respective Product Series in this catalog. All Military products are 100% electrically screened for the parameters shown in the respective product section. For non-military product, all series are 100% screened for leakage, capacitance and dissipation factor. All Series are inspected to electrical limits using a minimum .1% AQL sampling plans, according to the Military Standard MIL-STD-105, even after 100% testing. This sampling plan, to the best of KEMET Electronics' knowledge, meets or exceeds the generally accepted industry standard for similar products. KEMET capacitors may also be supplied, with prior agreement, to meet specifications with requirements differing from those of KEMET catalogs. ***Reference ESR values are provided but are NOT 100% screened***

These Notes apply generally to all KEMET solid tantalum capacitors and illustrate typical performance under normal application conditions, except where noted. Certain Series will respond differently to various environmental conditions. For example, hermetically sealed series are relatively immune to humidity effects, while plastic-encased series are not. The intent of these Notes is not to delineate such differences but to provide generalized information concerning performance characteristics.

## 1. GENERAL APPLICATION CLASS

Solid tantalum capacitors are usually applied in circuits where the AC component is small compared to the DC component. Typical uses known to KEMET Electronics include blocking, by-passing, decoupling, and filtering. They are also used in timing circuits. If two of these polar capacitors are connected "back-to-back" (i.e., negative-to-negative or positive-to-positive), the pair may be used in AC applications (as a non-polar device).

## 2. STORAGE CONDITIONS

Capacitors may be stored without applied voltage over the operating temperature range specified in the catalogs for each Series. The range is from -55 to +125° C for all Series.

Tantalum capacitors do not lose capacitance from the "de-forming" effect as do liquid-electrolytic capacitors. Storage at high temperature may cause a small, temporary increase in leakage current (measured under standard conditions), but the original value is usually restored within a few minutes after application of rated voltage.

Series which are not hermetically sealed exhibit reversible changes in parameters with respect to relative humidity (RH). Capacitance increases with increasing humidity. The limiting change, reached upon establishment of equilibrium with the environment, is approximately -5% to +12% over the range from 25% to 95% RH, referred to the standard 50% RH. The amount of change is dependent upon size (capacitance and voltage rating, ie: CV product); small sizes might change no more than ±5%. Equilibrium at such extremes is seldom attained by plastic-cased capacitors, and the change in capacitance is consequently less. The rate of response to humidity changes increases with increasing temperature. Dissipation factor also increases with increasing RH. The limiting change, at equilibrium with 95% RH, is approximately 50%.

DC leakage current may rise upon exposure to a combination of high temperature and high humidity, but is normally restored by voltage conditioning under standard conditions. The increase will be greater than that experienced under temperature influence alone because of conduction through absorbed water.

Hermetically-sealed and non-hermetic Series may be affected by absorption of water on external insulating surfaces. The water film may also attract a layer of dust from the air, increasing the effect. The most sensitive parameter is leakage current.

## 3. POLARITY

These capacitors are inherently polar devices and may be permanently damaged or destroyed if connected with the wrong polarity. The positive terminal is identified on the capacitor body by a polarity mark and the capacitor body may include an obvious geometrical shape. However, some Series contain two capacitors connected (negative-to-negative) to form "non-polar" capacitors. Rated voltage (see para. 8) may be applied to these Series in either direction.

## 4. OPERATING ENVIRONMENT

Most of the discussion under "Storage Conditions" will apply also when capacitors are operated within the applicable electrical ratings described below. The temporary increase in leakage current (at standard conditions) following elevated-temperature exposure is not observed, however, if the capacitors are operated with adequate DC voltage applied.

## 5. CAPACITANCE

Capacitance is measured at 120 Hz and 25° C with up to 1 volt rms applied. Note that, in either operation, peak AC plus DC bias must not exceed either rated voltage (normally polarized) or 15% of rated voltage in the reverse direction at 25°C. Measurement circuits are of high impedance, however, and under these conditions 1 volt rms may be applied even to 6 volt capacitors (23% peak reversal) without a DC bias. DC bias is thus normally not used, except when rated voltage is below 6 volts and the AC signal level exceeds 0.3 vrms. However, MIL-C-39003 provides for up to 2.2 volts DC. DC bias is not commonly used at room temperature, but is more commonly used at elevated temperatures.

DC bias causes a small reduction in capacitance, up to about 2% when full rated voltage is applied as bias. DF is also reduced by the presence of DC; rated voltage may cause a decrease in DF of about 0.2% (e.g., a decrease from 3.6 to 3.4% DF).

Capacitance changes very little below 1 kHz but decreases more noticeably at higher frequencies. Larger capacitance values decline more rapidly than small ratings. The effect of frequency upon capacitance is shown in Figure 1.

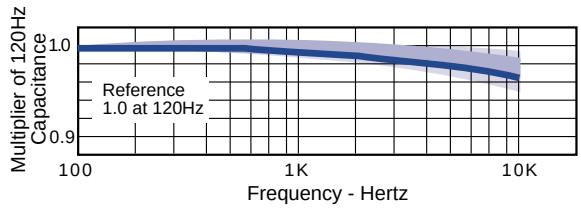


**Figure 1. Normal Effect of Frequency upon Capacitance**

Capacitance typically changes with temperature according to the curve of Figure 2.

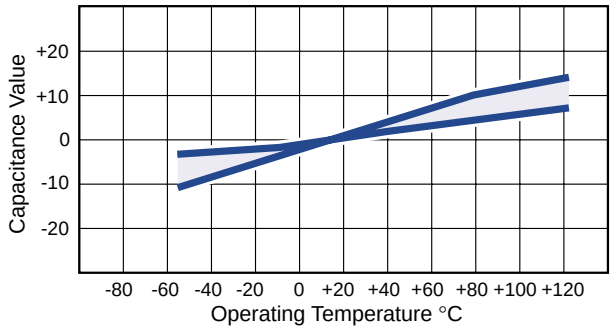


**Figure 2. Typical Effect of Temperature upon Capacitance**

## 6. DISSIPATION FACTOR (DF)

DF is measured at 120 Hz and 25° C with up to 1 volt rms applied. Note that, in either operation, peak AC plus DC bias must not exceed either rated voltage (normally polarized) or 15% of rated voltage in the reverse direction at 25°C. Measurement circuits are of high impedance, however, and under these conditions 1 volt rms may be applied even to 6 volt capacitors (23% peak reversal) without a DC bias. DC bias is thus normally not used, except when rated voltage is below 6 volts and the AC signal level exceeds 0.3 vrms. However, MIL-C-39003 provides for up to 2.2 volts DC. DC bias is not commonly used at room temperature, but is more commonly used at elevated temperatures.

Dissipation Factor (DF) is a useful low-frequency measure of the resistive component in capacitors. It is the ratio of the unavoidable resistance to the capacitive reactance, usually expressed in percent. DF increases with temperature above +25° C and may also increase at lower temperatures. Unfortunately, one general limit for DF cannot be specified for all capacitance/voltage combinations, nor can response to temperature be simply stated. Catalogs for the respective series list DF limits under various conditions.

Dissipation factor increases with increasing frequency as would be expected from the decreasing capacitive reactance. DF is not a very useful parameter above about 1 kHz. The DF of larger capacitance values increases more rapidly than that of smaller ratings. Figure 3 shows typical effect of frequency on DF.

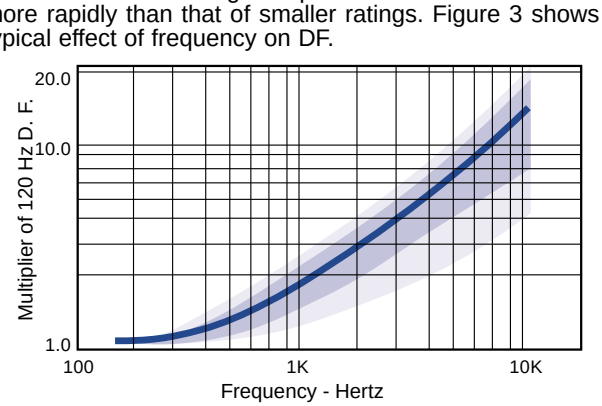


**Figure 3. Normal Effect of Frequency upon Dissipation Factor**

DC bias causes a small reduction in capacitance, up to about 2% when full rated voltage is applied, as bias. DF is also reduced by the presence of DC bias. Rated voltage may cause a decrease in DF of about 0.2% (e.g., a decrease from 3.6 to 3.4% DF).

DF is defined as $\frac{ESR}{X_c}$ and is also referred to occasionally, as tan d or "loss tangent." The "Quality Factor," Q, is the reciprocal of DF (DF is not expressed in percent in this calculation). Another expression, rarely used, is the "power factor," or $\frac{ESR}{Z}$. Power factor is cos u, while DF is ctn u.

## 7. DC LEAKAGE (DCL)

DC leakage is affected by voltage to a much larger extent, and this effect can frequently be used to advantage in circuits where only very low leakage currents can be tolerated. Typical response of DCL to applied voltage is illustrated in Figure 4.

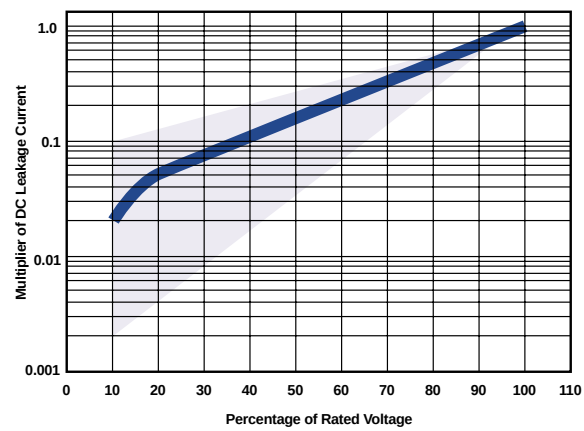


**Figure 4. Typical Range of DC Leakage as a Function of Applied Voltage**

DC leakage current (DCL) increases with increasing temperature according to the typical curve of Figure 5.

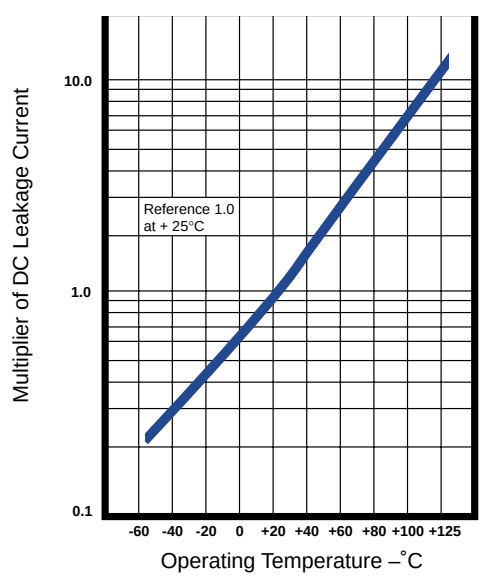


**Figure 5. Typical Effect of Temperature upon DC Leakage Current**

Leakage current is measured at a rated voltage through +85°C and may also be measured at +125°C with 2/3 of rated voltage applied.

## 8. RATED VOLTAGE

This term refers to the maximum continuous DC working voltage permissible at temperatures of +85° C or below. The lower operating temperature is specified as -55° C. Operation above +85° C is permissible, with reduced working voltage. Typical working voltage reduction is to 2/3 of rated voltage at +125° C.

## 9. WORKING VOLTAGE

This is the maximum recommended peak DC operating voltage for continuous duty at or below 85°C without DC voltage surges or AC ripple superimposed. No voltage derating is required below 85°C. Capacitors may be operated to 125°C with working voltage linearly derated to 2/3 of the 85°C rating at 125°C as shown in Figure 6.

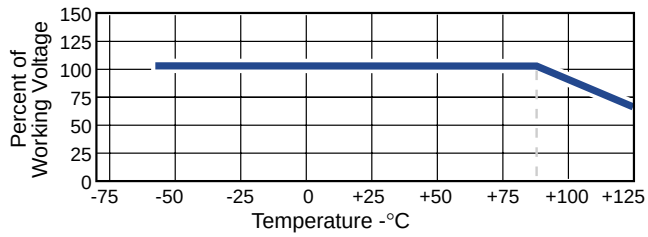


**Figure 6. Working Voltage Change with Temperature**

## 10. SURGE VOLTAGE

Surge voltage is defined as the maximum voltage to which the capacitor should be subjected under transient conditions, including peak AC ripple and all DC transients.

| DC Working Voltage @ 85°C | 2 | 3 | 4 | 6 | 10 | 15/16 | 20 | 25 | 35 | 50 | 60 | 75 | 100 | 125 |
|---|---|---|---|---|---|---|---|---|---|---|---|---|---|---|
| Surge Voltage @ 85°C | 2.6 | 4 | 5.3 | 8 | 13 | 20 | 26 | 33 | 46 | 65 | 78 | 98 | 130 | 140 |

**TABLE 1 Surge Voltage Ratings**

A typical surge voltage test is performed at +85°C with the applicable surge voltage per Table 1. The surge voltage is applied for 1000 cycles of 30 seconds on voltage through a 33 ohm series resistor and 30 seconds off voltage with the capacitor discharged through a 33 ohm resistor. Upon completing the test, the capacitors are allowed to stabilize at room temperature. Capacitance, DF, and DCL are then tested:

1. The DCL should not exceed the initial 25°C limit.
2. The capacitance should be within ±10% of initial value.
3. The DF should not exceed the initial 25°C limit.

## 11. REVERSE VOLTAGE

Although these are polar capacitors, some degree of transient voltage reversal is permissible, as seen below. The capacitors should not be operated continuously in reverse mode, even within these limits.

| Temperature, °C. | Percentage of Rated Voltage |
|---|---|
| +25 | 15 |
| +85 | 5 |
| +125 | 1 |

**TABLE 2 Reverse Voltage Ratings**

## 12. EQUIVALENT SERIES RESISTANCE (ESR)

Equivalent Series Resistance (ESR) is the preferred high-frequency statement of the resistance unavoidably appearing in these capacitors. ESR is not a pure resistance, and it decreases with increasing frequency. Typical ESR limits are established in each specific product series. However, the ESR limits provided are for reference only, and are not necessarily the actual value that a particular Series product will attain.

Total impedance of the capacitor is the vector sum of capacitive reactance ($X_C$) and ESR, below resonance; above resonance total impedance is the vector sum of inductive reactance ($X_L$) and ESR.

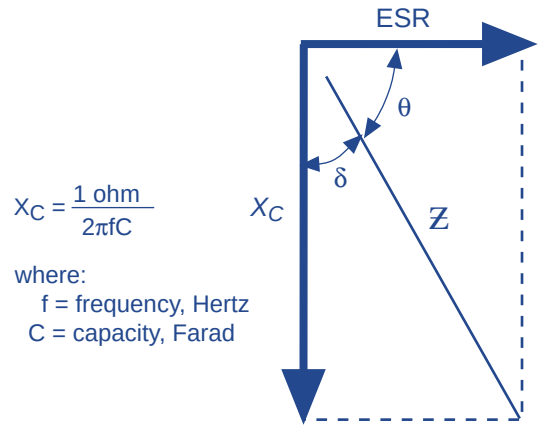


**Figure 7a Total Impedance of the Capacitor Below Resonance**

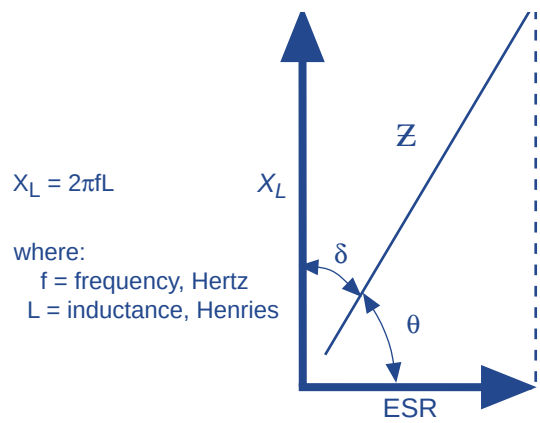


**Figure 7b Total Impedance of the Capacitor Above Resonance**

To understand the many elements of a capacitor, see Figure 8.

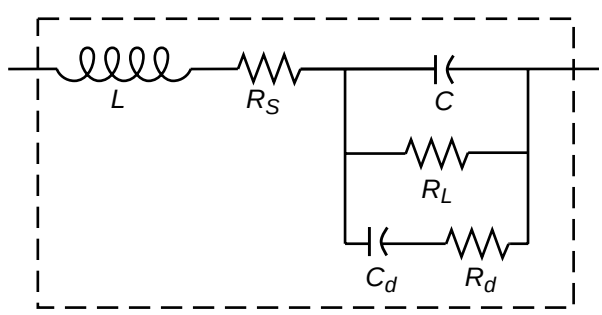


**Figure 8. The Real Capacitor**

A capacitor is a complex impedance consisting of many series and parallel elements, each adding to the complexity of the measurement system.

L — Represents lead wire and construction inductance. In most instances (especially in solid tantalum and

monolithic ceramic capacitors) it is insignificant at the basic measurement frequencies of 120 and 1000 Hz.

RS — Represents the actual ohmic series resistance in series with the capacitance. Lead wires and capacitor electrodes are contributing sources.

RL — Capacitor Leakage Resistance. Typically it can reach 50,000 megohms in a tantalum capacitor. It can exceed $10^{12}$ ohms in monolithic ceramics and in film capacitors.

Rd — The dielectric loss contributed by dielectric absorption and molecular polarization. It becomes very significant in high frequency measurements and applications. Its value varies with frequency.

Cd — The inherent dielectric absorption of the solid tantalum capacitor which typically equates to 1-2% of the applied voltage.

As frequency increases, $X_c$ continues to decrease according to its equation above. There is unavoidable inductance as well as resistance in all capacitors, and at some point in frequency, the reactance ceases to be capacitive and becomes inductive. This frequency is called the self-resonant point. In solid tantalum capacitors, the resonance is damped by the ESR, and a smooth, rather than abrupt, transition from capacitive to inductive reactance ($XL = 2\pi fL$) follows.

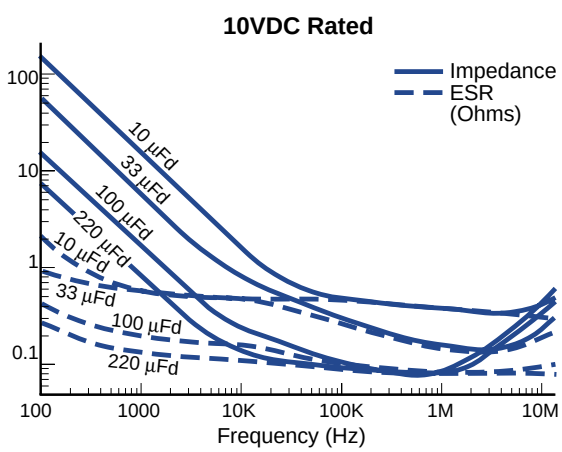


**Figure 9.** **ESR and Impedance vs. Frequency**

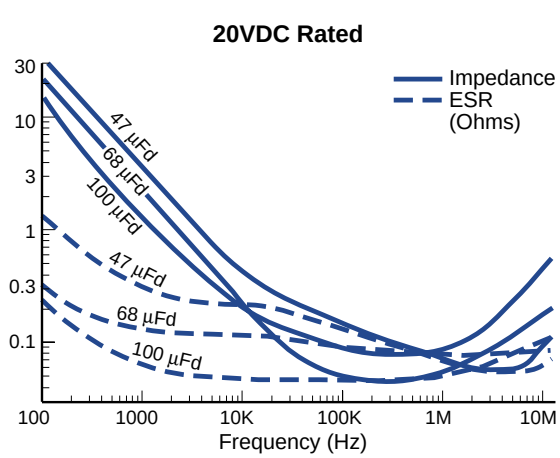


**Figure 10.** **ESR and Impedance vs. Frequency**

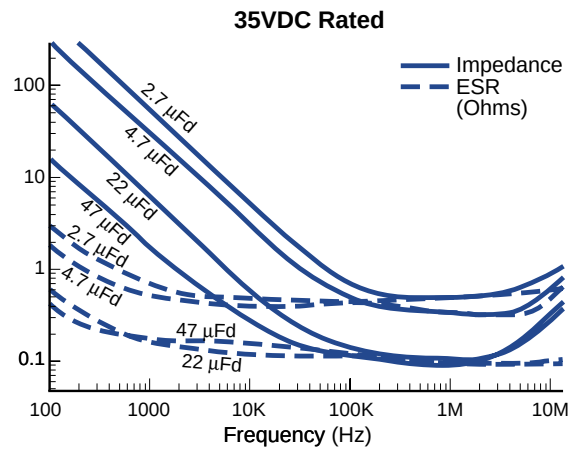


**Figure 11a.** **ESR and Impedance vs. Frequency**

Typical ESR and Z performance is given for representative capacitor ratings in Figures 9 through 11. Measured impedance will be affected by the length of lead wire included. Data for the curves were taken by including 1/2" of each lead wire in the measuring circuit.

Despite the fact that the reactance is entirely inductive above the self-resonance, these capacitors find use as decoupling devices above 10 MHz. Special designs have been developed for minimum inductance and are used above 100 MHz.

ESR and Z are also affected by temperature. At 100 kHz, ESR decreases with increasing temperature. The amount of change is influenced by the size of the capacitor and is generally more pronounced on smaller ratings.

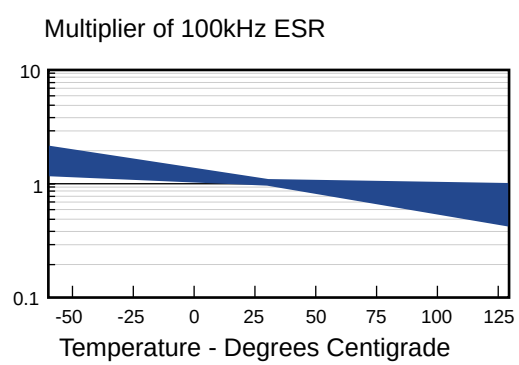


**Figure 11b Typical Effect of Temperature on 100 kHz ESR**

## 13. POWER DISSIPATION

Permissible power dissipation has been empirically established for all Series and is listed in each respective product section.

See pages 6-41 for herm seal, 42-50 for axial and radial molded, and 61-70 for tantalum dipped.

It is usually most convenient to translate the permissible power into an AC voltage rating. Assuming a sinusoidal waveform, the “ripple voltage” permissible may be calculated from the impedance and ESR data shown in the respective product section. However, three criteria must be observed:

1. Dissipated power must not exceed the limits specified for the Series.

2. The positive peak AC voltage plus the DC voltage must not exceed the maximum working voltage permitted at the ambient temperature.

3. The negative peak AC voltage, in combination with the DC voltage, must not exceed the permissible reverse voltage at the ambient temperature.

The rms ripple voltage limitation imposed by power dissipation is given by:

$$P = I^2R = \frac{E^2R}{Z^2}$$

where: I = rms ripple current (amperes)
E = rms ripple voltage (volts)
P = power (watts)
Z = impedance at specified frequency (ohms)
R = equivalent series resistance at specified frequency (ohms)

Maximum allowable rms ripple voltage may be determined as follows:

$$E(max) \ @ \ 25°C = Z \sqrt{\frac{P(max)}{R}}$$

E(max) = 85°C=0.9 E(max) @ 25°C
E(max) @ 125°C=0.4 E(max) @ 25°C
P(max) = maximum watts shown on Performance Characteristic pages 5, 42, 49, 58 and 61.

Permissible AC ripple current can be determined by the following:

$$I \text{ rms} = \sqrt{\frac{P(max)}{R}}$$

If two polar capacitors are connected back-to-back, [1] the pair may be operated on AC without need for DC bias. The first two criteria above must be observed. If DC is applied, the sum of DC and peak AC must not exceed, in either direction, the maximum working voltage specified for the ambient temperature.

[1] Some KEMET Series provide convenient assemblies of non-polar pairs. The two negative terminals are connected internally. It is also permissible to connect the two positive terminals to form a non-polar pair.

**14. LONG-TERM STABILITY**

Within the general class of electrolytic capacitors, solid tantalum capacitors offer unusual stability of the three important parameters: capacitance, dissipation factor, and leakage current. These solid-state devices are not subject to the effects of electrolysis, deforming or drying-out associated with liquid-electrolyte capacitors.

When stabilized for measurement at standard conditions, capacitance will typically change less than ±3% during a 10,000 hour life test +85° C. The same comparative change has been observed in shelf tests at +25° C extending for 50,000 hours. (Some of this change may stem from instrument or fixture error.)

Dissipation factor exhibits no typical trend. Data from 10,000 hour life tests at +85° C show that initial limits (at standard conditions) are not exceeded at the conclusion of these tests.

Leakage current is more variable than capacitance or DF; in fact, leakage current typically exhibits a logarithmic dependence in several respects. MIL-C-39003/1 permits leakage current (measured at standard conditions) to rise by a factor of four over 10,000 hour life tests. Typical behavior shows a lower rate of change, which may be negative or positive. Initial leakage currents are frequently so low (less than 0.1 nanoampere in the smallest CV capacitors, to about 10 microampere in the largest CV types) that changes of several orders of magnitude have no discernable effect on the usual circuit designs.

**15. FAILURE MODE**

Capacitor failure may be induced by exceeding the rated conditions of forward DC voltage, reverse DC voltage, surge voltage, surge current, power dissipation, or temperature. As with any practical device, these capacitors also possess an inherent, although low, failure rate when operated within the rated condition.

The dominant failure mode is by short-circuit. Minor parametric drifts (see Section 14 “Long-Term Stability”) are of no consequence in circuits suitable for solid tantalum capacitors. Catastrophic failure occurs as an avalanche in DC leakage current over a short (millisecond) time span. The failed capacitor, while called “short-circuited”, may exhibit a DC resistance of 10 to 104 ohm.

If a failed capacitor is in an unprotected low-impedance circuit, continued flow of current through the capacitor may obviously produce severe overheating. This heat may melt the internal solder (all Series) and the sealing solder used in hermetic Series. The short-circuit failure may thereby be converted to an open-circuit failure. If the circuit does not open promptly, the over-heated capacitor may damage the circuit board or nearby components. Protection against such occurrence is obtained by current-limiting devices or fuses provided by the circuit design.

Fortunately, the inherent failure rate of KEMET solid tantalum capacitors is low, and this failure rate may be further improved by circuit design. Statistical failure rates are provided for those capacitors with characters other than “A” in the next-to-last position of the part number. Relating circuit conditions to failure rate is aided by the guides in the section following.

**16. RELIABILITY PREDICTION**

Three important application conditions largely control failure rate: DC voltage, temperature, and circuit impedance. Estimates of the respective effects are provided by the nomograph in Figure 12 and Table 3 following. The nomograph related failure rate to voltage and temperature while the table relates failure rate to impedance. These estimates apply to steady-state DC conditions, and they assume usage within all other rated conditions.

Standard conditions, which produce a unity failure rate factor, are rated voltage, +85° C, and 0.1 ohm-per-volt circuit impedance. While voltage and temperature are straightforward there is sometimes difficulty in determining impedance. What is required is the circuit impedance seen by the capacitor. If several capacitors are connected in parallel, the impedance seen by each is lowered by the source of energy stored in the other capacitors. Energy is similarly stored in series inductors.

Failure rate is conventionally expressed in units of percent per thousand hours. As a sample calculation, suppose a particular batch of capacitors has a failure rate of 0.5% Khr under standard conditions. What would be predicted failure rate at 0.7 times rated voltage, +60° C and 0.8Ω/V? The nomograph gives a factor of 7 x 10-4, and the table gives a factor of 0.3. The failure rate estimate is then:

$$0.5 \times 7 \times 10^{-4} \times 0.3 = 1.05 \times 10^{-4}, \text{ or } 0.0001\% \text{ Khr}$$

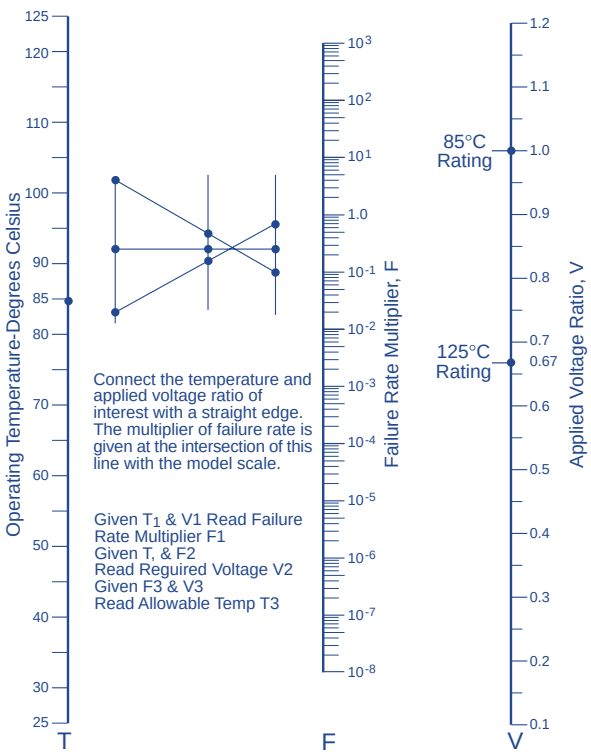


**Figure 12. Reliability Nomograph**

| Circuit Impedance (ohms/volt) | Failure Rate Improvement (multiplying factors) |
|---|---|
| 0.1 | 1.0 |
| 0.2 | .8 |
| 0.4 | .6 |
| 0.6 | .4 |
| 0.8 | .3 |
| 1.0 | .2 |
| 2.0 | .1 |
| 3 or greater | .07 |

**TABLE 3 Relationship of Failure Rate to Impedance**

Voltage "de-rating" is a common and useful approach to improved reliability. It can be pursued too far, however, when it leads to installation of higher voltage capacitors of much larger size. Inherent failure rate is roughly proportional to $CV^{1.6}$, where C is capacitance and V is rated voltage. The effect becomes particularly noticeable above 50-volt ratings. It is possible to lose more via higher inherent failure rate than is gained by voltage derating.

The relationships shown are more useful when the failure rate has been statistically determined for a given group of capacitors.

Failure rate is statistically determined for each production batch of KEMET High Reliability capacitors, as described in Specification GR500 Catalog F2956. As noted above, not all capacitance/voltage rate values are inherently equal in failure rate. GR500 capacitors are processed and subjected to 100% reliability testing as a homogeneous group of one capacitance/voltage value. Failure rate under standard conditions is available from 1 to 0.001% Khr, depending upon the capacitance/voltage value.

Several Series are qualified under U.S. military specification MIL-C-39003. Failure rates as low as 0.001%/Khr are available for all capacitance/voltage values in given groups under this test program. The specifications and their accompanying Qualified Products Lists should be consulted for details.

For Series not covered by military specifications, and internal sampling program is operated by KEMET Quality Assurance. The confidence level chosen for reporting the data is 60%. However, the cost of sampling each batch produced is overwhelmingly prohibitive, and no claim is made concerning knowledge of failure rate for any particular lot shipped. It is demonstrated that average failure rate for all commercial Series is between .1 and 1%/Khr at standard conditions and 60% confidence after 2,000 hours' testing, +85°C, and rated voltage and ≤ 1 ohm total series resistance.

## 17. SURGE CURRENT

All conventional reliability testing is conducted under steady-state DC voltage. Experience indicates that AC ripple, within the limits prescribed, has little effect on failure rate. Heavy surge currents are possible in some applications, however. Circuit impedance may be very low (below the standard 0.1 ohm/volt) or there may be driving inductance to cause voltage "ringing." Surge current may appear during turn-on of equipment, for example.

Failure rate under current-surge conditions may not be predictable from conventional life test data. A surge current test is utilized to ensure against a high frequency of such failures, and a description is available free of charge. The test has been adopted for all capacitors under MIL-C-39003/06/09/10 and KEMET's GR500 specifications.

## 18. ENVIRONMENTAL CONSIDERATION

It is not possible to foresee all the conditions to which capacitors may be subjected. Following is a list of standard tests which every Series will survive. Data may be available (upon request) under more severe stresses for certain Series.

- LIFE TEST 85°C OR 125°C, 2000 Hours: When subjected to 2000 hours at 85°C at full rated DC voltage, or 125°C at 2/3 of 85°C voltage, the capacitor shall meet the following requirements when tested at 25°C:

  The DCL shall be within 1.25 times the initial DCL limit.

  Capacitance shall be within ±10% of the initial measured value.

  The DF shall not exceed the initial limit.

- SHELF LIFE +85°, 2000 hours. Post test of capacitor shall meet the following requirements when tested at 25°C:

  The DCL shall be within 1.5 times the initial DCL limit.

  Capacitance shall be within ±10% of the initial measured value.

  The DF shall not exceed 1.5 times the initial limit.

- LEAD STRENGTH MIL-STD-202 Method 211: Pull test will be performed as in MIL-STD-202, Method 211. The following details and exceptions shall apply.
  a. Test condition letter—A
  b. The body of the capacitor will be securely clamped during test.

c. Applied force—3 pounds (1.4 kg).
d. Test Condition letter—C (M39003 Test Condition letter—D)
e. Applied Force—1 pound, 3 bends.

- VIBRATION; HIGH FREQUENCY: Per MIL-STD-202, Method 204, Condition D, 10 Hz to 2000 Hz.
  a. Mounting—Capacitors shall be mounted on a fixture by the body. Leads shall be supported by rigidly supported terminals.
  b. Electrical load conditions—During the test, the specified DC rated voltage shall be applied to the capacitors.
  c. Test condition letter—D (20 G).
  d. Duration and direction of motion—4 hours in each of two mutually perpendicular directions (total of 8 hours), one parallel and the other perpendicular to the axis.
  e. Measurements during vibration—During the last cycle, an electrical measurement shall be made to determine intermittent operation or open- or short-circuiting. Observations shall also be made to determine intermittent contact or arcing or open- or short-circuiting. Detecting equipment shall be sufficiently sensitive to detect any interruption with a duration of 0.5 ms, or greater.
  f. Examination after test—Capacitors shall be visually examined for evidence of mechanical damage.

- SHOCK TEST: Per MIL-STD-202, Method 213. The following details shall apply:
  a. Special mounting means—Capacitors shall be rigidly mounted on a mounting fixture by the body. When securing leads, care shall be taken to avoid pinching the heads.
  b. Test-condition letter—I (100 G peak). 6 ms. (saw-tooth)
  c. Measurements and electrical loading during shock—During the test, observations shall be made to determine intermittent contact or arcing or open- or short-circuiting. Detecting equipment shall be sufficiently sensitive to detect any interruption with a duration of 0.5 ms. The DC rated voltage shall be applied to the capacitors during the test.
  d. Examinations after test—Capacitors shall be visually examined for evidence of arcing, breakdown, and mechanical damage.

- HUMIDITY LIFE TEST: Capacitors shall be capable of withstanding 1000 hours at 55°C with an ambient humidity of 90-95% RH with rated DC voltage applied. After the capacitors have stabilized for a period of 24 hours at 25°C, they shall meet the following limits:

  DCL shall not exceed 5 times the initial limit.

  Capacitance shall be within ±10% of the initial value.

  DF shall not exceed 2 times the initial limit.

- THERMAL SHOCK—MIL-STD-202, Method 107: Capacitors shall be subjected to thermal shock in accordance with MIL-STD-202, Method 107, Test Condition A. M39003 Components tested to MIL-STD-202, Method 107, Condition B. Measurements before and after cycling are required. Conditioning prior to the first cycle will be 15 minutes at the following standard inspection conditions:
  a. Relative Humidity—Less than 50%.
  b. Ambient Temperature—25°C ±5°C.
  c. Final measurements are made after stabilization at room temperature.

- MOISTURE RESISTANCE—MIL-STD-202, Method 106: Capacitors shall be tested in accordance with MIL-STD-202, Method 106 including the following details:
  a. Mounting—The capacitors shall be mounted by normal mounting means
  b. Initial Measurements
  c. Polarizing and Load Voltage—Not applicable
  d. Final measurements—After the final cycle and within 2 to 6 hours after removal of the capacitors from the humidity chamber, capacitance, dissipation factor, and DC leakage will be measured.

  DCL should not exceed the initial 25°C limit.

  Capacitance should be within ±10% of the initial measured value.

  DF should not exceed the initial 25°C limit.

- RESISTANCE TO SOLVENTS — MIL-STD-202, Method 215:

  Brushing required after test.

  DCL meets limit shown in respective Part Number Tables.

  Capacitance meets applicable tolerance.

  DF meets limits shown in respective Part Number Tables.

  No visible damage to case or marking.

- RESISTANCE TO SOLDERING HEAT — MIL-STD-202,

  Method 210, Test Condition.

  Letter B. (260° for 10 Sec.)

  Leads shall be immersed to within ¼ inch of the capacitor body. Capacitance, DF, and DCL should meet original limits shown in respective Part Number Tables.

- SOLDERABILITY — MIL-STD-202, Method 208;

  Number of terminations on each capacitor tested: 2.

  Depth of insertion in flux and solder to within .125" of capacitor body.

- FLAMMABILITY — The encapsulant for Molded and Conformal Coated Product meets or exceeds the following requirements:

  Underwriters Lab. UL 94V-0

  Oxygen Index per ASTM-D-2863

  28% min.

- STABILITY AT LOW AND HIGH TEMPERATURE

  -55°C to 125°C: Capacitors will be capable of withstanding extreme temperature testing at a succession of continuous steps at +25°C, -55°C, +25°C, +85°C, +125°C, +25°C, in the order stated. Capacitors shall be brought to thermal stability at each test

temperature. Capacitance, DF, and DCL are measured at each test temperature except that DCL is not measured at -55°C. DC bias of 2.0 ±0.5 vdc is recommended for the capacitance and DF measurements.

When measurements are made at the various steps, the electrical limits for each temperature shall not exceed the following limits.

| | |
|---|---|
| Step 1, +25°C, | DCL as indicated in original limit; capacitance within tolerance specified; DF as indicated in original limit shown in Part Number Tables. |
| Step 2, -55°C, | Capacitance within ±10% of initial value; ESR, DF within limit shown in Part Number Tables. |
| Step 3, +25°C, | DCL as indicated in original limit; capacitance within ±5% of initial value; ESR, DF within limit shown in Part Number Tables. |
| Step 4, +85°C, | DCL shall not exceed 10 times original DCL limit at 25°C. Capacitance shall be within ±10% of the initial value. DF shall be within 125% of limits shown in Part Number Tables. ESR shall be within limits shown in Part Number Tables. |
| Step 5, +125°C, | DCL shall not exceed 12.5 times the original limit at 25°C. Capacitance shall be within ±12% of initial value. DF shall be within 150% of limits shown in Part Number Tables. ESR shall be within limits shown in Part Number Tables. |
| Step 6, +25°C, | DCL as indicated in original limit; capacitance within ±5% of initial value; ESR, DF as indicated in original limit shown in Part Number Tables. |

Note: M39003 specifies Δ's and limits by individual slash sheet.

- DAMP HEAT, STEADY STATE: Meets requirements of IEC Publication 384-15, method IEC 68-2-3. Climatic category 55/125/56.

**19. MOUNTING**

All encapsulated Series fall into two general classes. The first is provided with leads extending from opposite ends of the body, generally along the principle axis of the body (“axial leads”). The second is provided with parallel leads extending from one side or face of the body (“radial leads”). With either type, mounting points are normally provided by the leads themselves.

Axial leads may be used for point-to-point wiring, but usually, the wires are bent at 90° from the capacitor axis for insertion through printed circuit (PC) boards. Axial capacitors supplied on reels for machine insertion will withstand the mechanical stresses of bending and inserting by all popular machines known to KEMET at this time. Most KEMET axial Series may be supplied on reels to feed such machines. Radial leads are intended to plug directly into holes of PC boards. Auto-machines will insert combatible radial capacitor designs, and most KEMET capacitors may be supplied in appropriate reeled forms (ARIS).

With either axial or radial types, attention should be paid to treatment of the capacitors during mounting and afterward under service conditions. Difficulty during mounting usually arises from lead damage or from overheating. Hand soldering technique or, more often, wave-solder machines cause the overheating. The internal cathode connection on most Series is made between solder and a silver-pigmented paint. If too much heat is applied, this solder may remelt and degrade the silver-solder interface or cause a direct short-circuit.

KEMET’s hermetically-sealed series has an internal space into which molten cathode solder may run, depriving the cathode connection and possibly flowing across the terminals to short-circuit the capacitor from the inside. It is also possible to remelt the solder which bonds the rim of the glass-metal seal, causing loss of hermeticity and possibly a short-circuit. Finally, solder at the exit point of the positive wire may be remelted with similar effect. This solder is a high-temperature alloy, however, and it is much less likely to be melted. (Re-dipping of lead wires is practiced by some users, introducing another hazard of remelting this solder).

Plastic-encased Series have only one site of solder, the internal cathode connection. The rate of heat transfer through the plastic is lower than through the metal can of hermetic Series, but conduction along the negative leadwire to remelt this solder is very similar. There is little internal void within plastic cases, so remelted solder tends to remain in its original location and solidify when heat is removed. Short-circuiting is very unlikely, but reliability of the internal connection may be compromised by leaching of silver from the paint into the molten solder. The latter effect degrades the cathode connection in hermetic parts as well.

All encased capacitors will pass the Resistance to Soldering Heat Test of MIL-STD-202, Method 210, Condition B. This test dips each leadwire into molten solder at +260° C for 10 seconds while the capacitor body is held vertically above the solder. KEMET capacitors will pass this test when the depth of immersion brings the capacitor body (or closest external solder joint, if it is closer as in some hermetic Series) to a minimum distance of 0.100 inches from the solder surface. This demonstration of resistance to solder heat is in accordance with what is believed to be the industry standard. More severe treatment must be considered reflective of an improper soldering process.

Shown in Figure 13 is a recommended solder wave profile for both axial and radial leaded solid tantalum capacitors.

## Optimum Solder Wave Profile

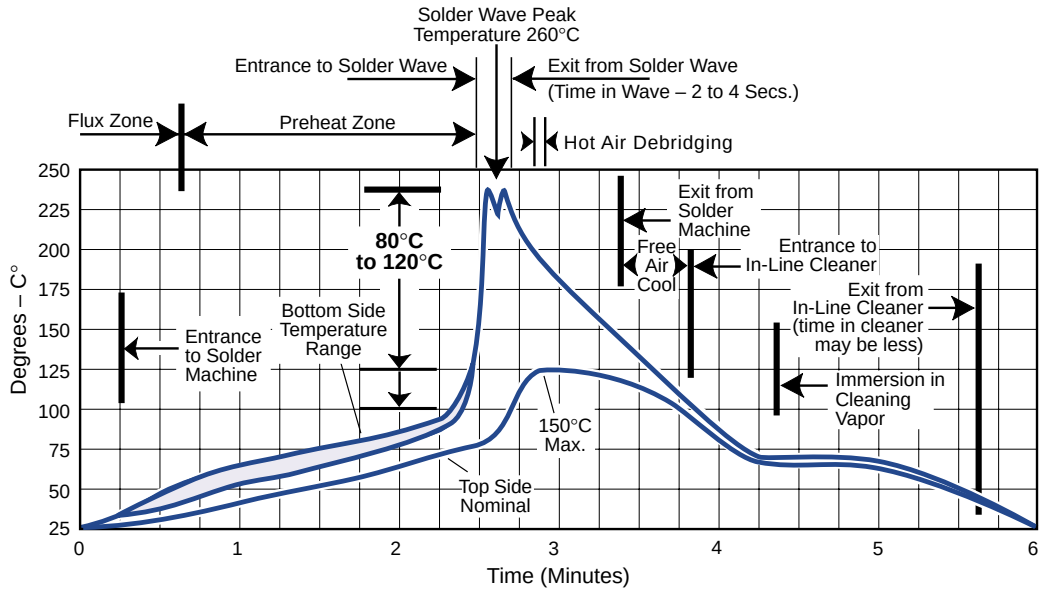


**Figure 13.**

# KEMET Electronics Corporation

**World Sales Headquarters**
**P.O. Box 5928 ¥ Greenville, SC 29606 ¥ www.kemet.com**
**Phone: (864) 963-6300 ¥ Fax: (864) 963-6521**

## USA/Canada Locations

KEMET Electronics Corporation
2350 Mission College Blvd., Suite 972
Santa Clara, CA 95054
Phone: 408-986-0424
Fax: 408-986-1442

KEMET Electronics Corporation
Schaumburg Corporate Center
Suite 350, 1515 Woodfield Road
Schaumburg, IL 60173
Phone: 847-517-1030
Fax: 847-517-1037

KEMET Electronics Corporation
444 Washington Street, Suite 510
Woburn, MA 01801
Phone: 781-933-1010
Fax: 781-376-0929

KEMET Electronics Corporation
8445 Freeport Parkway, Suite 320
Irving, TX 75063
Phone: 972-870-9530
Fax: 972-870-9537

KEMET Electronics Canada Ltd.
105-7145 West Credit Ave., Bldg. #2
Mississauga, L5N 6J7, ON
Canada
Phone: 905-542-7930
Fax: 905-542-7949

KEMET Electronics Canada Ltd.
6001 35th Avenue
:ava; West, Quebec, Canada H7R 3P7
Phone: 450-962-0806
Fax: 450-962-6462

## Europe/Africa Locations

KEMET Electronics S.A.
1-3, Avenue de la Paix
P.O.B. 76
CH-1211 Geneva 20,
Switzerland
Phone: 41-22-715-0100
Fax: 41-22-715-0170

KEMETElectronics GmbH
Elisabethstrasse 89-91
D-80797 Munich
Germany
Phone: 49-89-456-4200

KEMET Electronics Ltd.
Waterfront House, 55/61 South St.
Bishop s Stortford
Hertfordshire, CM23 3AL
United Kingdom
Phone: 44-1279-757343
Fax: 44-1279-757188

Aviv Electronics Ltd.
Hayetzira St. No. 4
P.O. Box 2433
Ra anana, 43100, Israel
Phone: 972-9-748-3232
Fax: 972-9-741-6510

KEMET Electronics S.A.R.L.
ZAC Paris Rive Gauche
118-122, avenue de France
75013 Paris, France
Phone: 01-33-01-464-61009
Fax: 01-33-01-464-61599

Arrow Altech Distribution PTY LTD
P.O. Box 701
Isando, 1600
South Africa
Phone: 27-11-923-9699
Fax: 27-11-923-9720

## Asia Locations

KEMET Electronics (Shanghai) Co., Ltd.
2/F, No. 7 Bldg., 330 Xiya Rd.
Waigaoqiao Free Trade Zone
Pudong, Shanghai 200137, China
Phone: 86-21-5046-0983
Fax: 86-21-5046-0981

KEMET Electronics Asia Ltd.
Rm 605, Citic Bldg.
No. 19 Jian Guo Men Wai Da Jie
Beijing, 100004, China
Phone: 8610-8526-3628
Fax: 8610-8526-3626

KEMET Electronics Asia Ltd.
30 Canton Rd., Room 1512
Silvercord Tower II
Tsimshatshui, Kowloon Bay, Hong Kong
Phone: 852-2305-1168
Fax: 852-2759-0345

KEMET Electronics Marketing PTE Ltd.
8-2-04, Sunny Point Kompleks
Jalan Batu Uban, 11700 Penang
Penang, Malaysia
Phone: 60-4-6595200
Fax: 60-4-6595220

KEMET Electronics Marketing PTE Ltd.
101 Thomson Road, #23-03
United Square
Singapore, 307591, Singapore
Phone: 65-6353-6636
Fax: 65-6353-6656

KEMET Electronics Corporation
Taiwan Branch, 3-4F, No. 148, Section 4
Chung-Hsaio E. Rd.
Taipei, Taiwan ROC
Phone: 886-2-27528585
Fax: 886-2-27213129

WesTech Electronics & System Co. Ltd
302/12 Central Condominum
Ladproa Soil, Ladproa Road
Ladyao, Jatujak
Bangkok, Thailand 109000
Phone: 662-939-3482-6
Fax: 662-939-3481

Crusader Electronics Pty. Ltd.
Unit 3, 92 Bryant Street
Padstow, NSW 2211, Australia
Phone: 612-9792-3922
Fax: 612-9792-1446

Unicom International Corporation
702 Shinhwa Bldg., Mapo-Gu
Seoul, 121050, Korea
Phone: 82-2712-5821
Fax: 82-2712-5823

**NOTICE: Place 011 in front of the above Phone and Fax numbers for Europe and Asia, when dialing from a United States exchange.**
**Note: KEMET reserves the right to modify minor details of internal and external construction at any time in the interest of product improvement.**
**KEMET does not assume any responsibility for infringement that might result from the use of KEMET Capacitors in potential circuit designs.**
**' KEMET is a registered trademark of KEMET Electronics Corporation. ' KEMET Electronics Corporation**

Мы молодая и активно развивающаяся компания в области поставок электронных компонентов. Мы поставляем электронные компоненты отечественного и импортного производства напрямую от производителей и с крупнейших складов мира.

Благодаря сотрудничеству с мировыми поставщиками мы осуществляем комплексные и плановые поставки широчайшего спектра электронных компонентов.

Собственная эффективная логистика и склад в обеспечивает надежную поставку продукции в точно указанные сроки по всей России.

Мы осуществляем техническую поддержку нашим клиентам и предпродажную проверку качества продукции. На все поставляемые продукты мы предоставляем гарантию .

Осуществляем поставки продукции под контролем ВП МО РФ на предприятия военно-промышленного комплекса России , а также работаем в рамках 275 ФЗ с открытием отдельных счетов в уполномоченном банке. Система менеджмента качества компании соответствует требованиям ГОСТ ISO 9001.

Минимальные сроки поставки, гибкие цены, неограниченный ассортимент и индивидуальный подход к клиентам являются основой для выстраивания долгосрочного и эффективного сотрудничества с предприятиями радиоэлектронной промышленности, предприятиями ВПК и научно-исследовательскими институтами России.

С нами вы становитесь еще успешнее!

**Наши контакты:**

**Телефон:** +7 812 627 14 35

**Электронная почта:** sales@st-electron.ru

**Адрес:** 198099, Санкт-Петербург, Промышленная ул, дом № 19, литера Н, помещение 100-Н Офис 331