THIS DRAWING IS UNPUBLISHED. RELEASED FOR PUBLICATION AUG ,2006.
© COPYRIGHT – BY TYCO ELECTRONICS CORPORATION. ALL RIGHTS RESERVED.

| LOC | DIST |
|---|---|
| DW | — |

REVISIONS

| P | LTR | DESCRIPTION | DATE | DWN | APVD |
|---|---|---|---|---|---|
| | F6 | REVISED (ECR-12-013183) TO IDENTIFY PCI-E SPEC GEN II & GEN III FOR EACH P/N | 26JUL'12 | E.L. | W.K. |

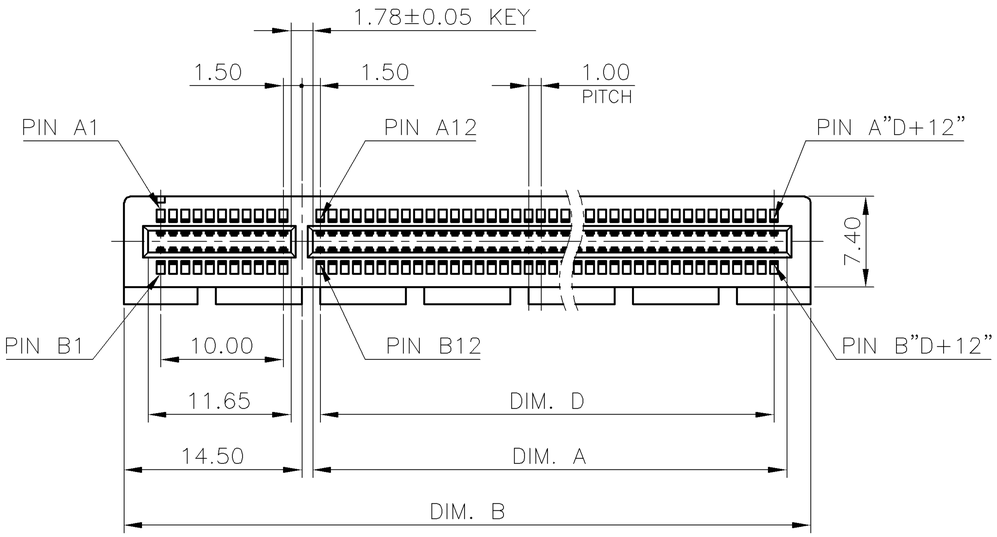


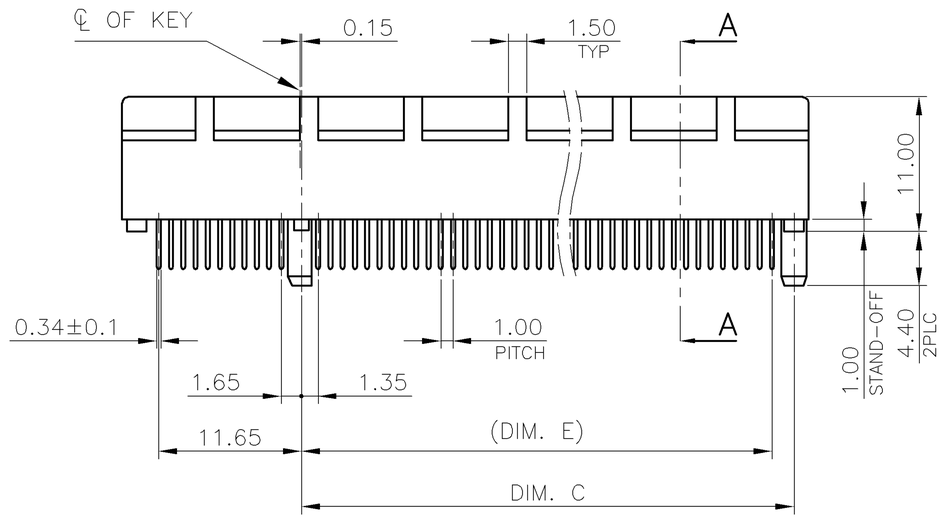


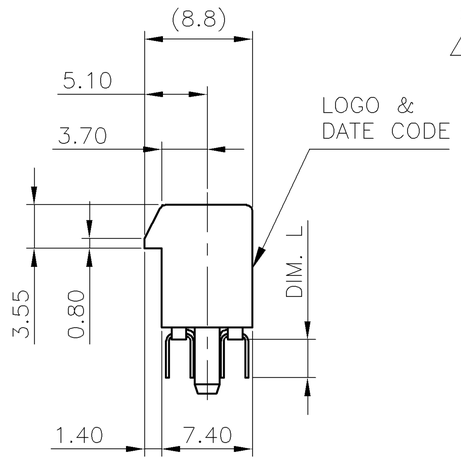


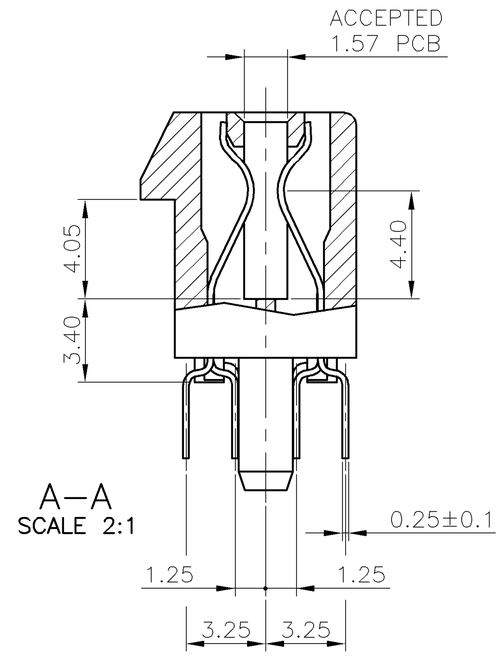


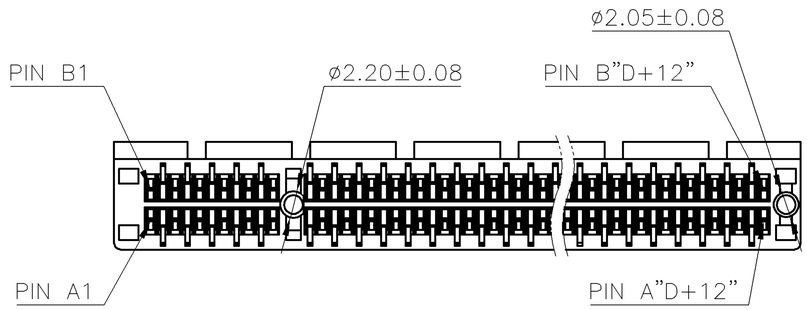


NOTES:

1. MATERIAL:
   1.1 HOUSING: 1.PA46 WITH 40% G.F, UL94 V-0, COLOR: SEE TABLE.
   2.PA9T WITH 30% GF, UL94 V-0, COLOR: SEE TABLE.
   1.2 CONTACT: PHOSPHOR BRONZE
2. FINISH:
   CONTACT: (SEE TABLE) GOLD PLATING ON CONTACT AREA.
   2.54um [100u"] MIN. MATTE-TIN PALTING ON SOLDER TAIL AREA.
   1.27um [50u"] MIN. NICKEL UNDERPLATING OVERALL.
3. CONNECTOR HAS MET THE REQUIREMENTS PER PCI EXPRESS GEN 2 TECHNICAL DOCUMENT.
4. WEIGHT:
   36 POS.: 2.55 GRAMS; 64 POS.: 3.90 GRAMS
   98 POS.: 5.50 GRAMS; 164 POS.: 8.80 GRAMS
5. WAVE SOLDER CAPABLE TO 265°C PER TEST SPEC. 109-202 CONDITION B.
6. REFLOW SOLDER CAPABLE TO 260°C PER TEST SPEC. 109-201 CONDITION B. (REFLOW SOLDERING PLEASE USE PN : 1734774-1 TO 4-1734774-8)

THIS DRAWING IS A CONTROLLED DOCUMENT.

DIMENSIONS: MM

TOLERANCES UNLESS OTHERWISE SPECIFIED:

| | |
|---|---|
| 0 PLC | ± – |
| 1 PLC | ± 0.3 |
| 2 PLC | ± 0.2 |
| 3 PLC | ± 0.15 |
| 4 PLC | ± – |
| ANGLES | ± 3° |

MATERIAL: SEE NOTE

FINISH: SEE NOTE

| | | |
|---|---|---|
| DWN | B. HSING | 15JUL2009 |
| CHK | S. CHIEN | 15JUL2009 |
| APVD | W. KODAMA | 15JUL2009 |

PRODUCT SPEC: 108-57871

APPLICATION SPEC: —

WEIGHT: SEE NOTE 4

CUSTOMER DRAWING

TE Connectivity

NAME: PCI EXPRESS CARD EDGE CONNECTOR VERTICAL, DIP TYPE, 3GIO

| SIZE | CAGE CODE | DRAWING NO | RESTRICTED TO |
|---|---|---|---|
| A3 | 00779 | C-1734774 | — |

SCALE: — SHEET 1 OF 4 REV F6

THIS DRAWING IS UNPUBLISHED. RELEASED FOR PUBLICATION AUG ,2006.
© COPYRIGHT – BY TYCO ELECTRONICS CORPORATION. ALL RIGHTS RESERVED.

| LOC | DIST |
|---|---|
| DW | – |

REVISIONS

| P | LTR | DESCRIPTION | DATE | DWN | APVD |
|---|---|---|---|---|---|
| | | SEE SHEET 1. | | | |

| WEIGHT(g) | PCI–E COMPLIANCE | HOUSING MATERIAL | DIM. L | DIM. E | DIM. D | DIM. C | DIM. B | DIM. A | POS. | HOUSING COLOR | MIN. GOLD THICKNESS | PART NUMBER |
|---|---|---|---|---|---|---|---|---|---|---|---|---|
| 8.7 | GEN II & GEN III | 6 PA9T | 2.30 | 71.35 | 70 | 73.15 | 89 | 71.65 | 164 | BLACK | 30u" | 4–1734774–8 |
| | | | | | | | | | | WHITE | | 4–1734774–7 |
| 5.45 | | | | 38.35 | 37 | 40.15 | 56 | 38.65 | 98 | BLACK | | 4–1734774–6 |
| | | | | | | | | | | WHITE | | 4–1734774–5 |
| 3.85 | | | | 21.35 | 20 | 23.15 | 39 | 21.65 | 64 | BLACK | | 4–1734774–4 |
| | | | | | | | | | | WHITE | | 4–1734774–3 |
| 2.55 | | | | 7.35 | 6 | 9.15 | 25 | 7.65 | 36 | BLACK | | 4–1734774–2 |
| | | | | | | | | | | WHITE | | 4–1734774–1 |
| 8.7 | | | | 71.35 | 70 | 73.15 | 89 | 71.65 | 164 | BLACK | 15u" | 4–1734774–0 |
| | | | | | | | | | | | G/F | 3–1734774–9 |
| | | | | | | | | | | WHITE | 15u" | 3–1734774–8 |
| | | | | | | | | | | | G/F | 3–1734774–7 |
| 5.45 | | | | 38.35 | 37 | 40.15 | 56 | 38.65 | 98 | BLACK | 15u" | 3–1734774–6 |
| | | | | | | | | | | | G/F | 3–1734774–5 |
| | | | | | | | | | | WHITE | 15u" | 3–1734774–4 |
| | | | | | | | | | | | G/F | 3–1734774–3 |
| 3.85 | | | | 21.35 | 20 | 23.15 | 39 | 21.65 | 64 | BLACK | 15u" | 3–1734774–2 |
| | | | | | | | | | | | G/F | 3–1734774–1 |
| | | | | | | | | | | WHITE | 15u" | 3–1734774–0 |
| | | | | | | | | | | | G/F | 2–1734774–9 |
| 2.55 | | | | 7.35 | 6 | 9.15 | 25 | 7.65 | 36 | BLACK | 15u" | 2–1734774–8 |
| | | | | | | | | | | | G/F | 2–1734774–7 |
| | | | | | | | | | | WHITE | 15u" | 2–1734774–6 |
| | | | | | | | | | | | G/F | 2–1734774–5 |
| 8.7 | | | 3.10 | 71.35 | 70 | 73.15 | 89 | 71.65 | 164 | BLACK | 30u" | 2–1734774–4 |
| | | | | | | | | | | WHITE | | 2–1734774–3 |
| 5.45 | | | | 38.35 | 37 | 40.15 | 56 | 38.65 | 98 | BLACK | | 2–1734774–2 |
| | | | | | | | | | | WHITE | | 2–1734774–1 |
| 3.85 | | | | 21.35 | 20 | 23.15 | 39 | 21.65 | 64 | BLACK | | 2–1734774–0 |
| | | | | | | | | | | WHITE | | 1–1734774–9 |
| 2.55 | | | | 7.35 | 6 | 9.15 | 25 | 7.65 | 36 | BLACK | | 1–1734774–8 |
| | | | | | | | | | | WHITE | | 1–1734774–7 |
| 8.7 | | | | 71.35 | 70 | 73.15 | 89 | 71.65 | 164 | BLACK | 15u" | 1–1734774–6 |
| | | | | | | | | | | | G/F | 1–1734774–5 |
| | | | | | | | | | | WHITE | 15u" | 1–1734774–4 |
| | | | | | | | | | | | G/F | 1–1734774–3 |
| 5.45 | | | | 38.35 | 37 | 40.15 | 56 | 38.65 | 98 | BLACK | 15u" | 1–1734774–2 |
| | | | | | | | | | | | G/F | 1–1734774–1 |
| | | | | | | | | | | WHITE | 15u" | 1–1734774–0 |
| | | | | | | | | | | | G/F | 1734774–9 |
| 3.85 | | | | 21.35 | 20 | 23.15 | 39 | 21.65 | 64 | BLACK | 15u" | 1734774–8 |
| | | | | | | | | | | | G/F | 1734774–7 |
| | | | | | | | | | | WHITE | 15u" | 1734774–6 |
| | | | | | | | | | | | G/F | 1734774–5 |
| 2.55 | | | | 7.35 | 6 | 9.15 | 25 | 7.65 | 36 | BLACK | 15u" | 1734774–4 |
| | | | | | | | | | | | G/F | 1734774–3 |
| | | | | | | | | | | WHITE | 15u" | 1734774–2 |
| | | | | | | | | | | | G/F | 1734774–1 |

| WEIGHT(g) | PCI–E COMPLIANCE | HOUSING MATERIAL | DIM. L | DIM. E | DIM. D | DIM. C | DIM. B | DIM. A | POS. | HOUSING COLOR | MIN. GOLD THICKNESS | PART NUMBER |
|---|---|---|---|---|---|---|---|---|---|---|---|---|
| 8.8 | GEN II | PA46 | 2.30 | 71.35 | 70 | 73.15 | 89 | 71.65 | 164 | BLACK | 30u" | 9–1734774–7 |
| | | | | | | | | | | WHITE | | 9–1734774–6 |
| 5.5 | | | | 38.35 | 37 | 40.15 | 56 | 38.65 | 98 | BLACK | | 9–1734774–5 |
| | | | | | | | | | | WHITE | | 9–1734774–4 |
| 3.9 | | | | 21.35 | 20 | 23.15 | 39 | 21.65 | 64 | BLACK | | 9–1734774–3 |
| | | | | | | | | | | WHITE | | 9–1734774–2 |
| 2.55 | | | | 7.35 | 6 | 9.15 | 25 | 7.65 | 36 | BLACK | | 9–1734774–1 |
| | | | | | | | | | | WHITE | | 9–1734774–0 |
| 8.8 | | | | 71.35 | 70 | 73.15 | 89 | 71.65 | 164 | BLACK | 15u" | 8–1734774–9 |
| | | | | | | | | | | | G/F | 8–1734774–8 |
| | | | | | | | | | | WHITE | 15u" | 8–1734774–7 |
| | | | | | | | | | | | G/F | 8–1734774–6 |
| 5.5 | | | | 38.35 | 37 | 40.15 | 56 | 38.65 | 98 | BLACK | 15u" | 8–1734774–5 |
| | | | | | | | | | | | G/F | 8–1734774–4 |
| | | | | | | | | | | WHITE | 15u" | 8–1734774–3 |
| | | | | | | | | | | | G/F | 8–1734774–2 |
| 3.9 | | | | 21.35 | 20 | 23.15 | 39 | 21.65 | 64 | BLACK | 15u" | 8–1734774–1 |
| | | | | | | | | | | | G/F | 8–1734774–0 |
| | | | | | | | | | | WHITE | 15u" | 7–1734774–9 |
| | | | | | | | | | | | G/F | 7–1734774–8 |
| 2.55 | | | | 7.35 | 6 | 9.15 | 25 | 7.65 | 36 | BLACK | 15u" | 7–1734774–7 |
| | | | | | | | | | | | G/F | 7–1734774–6 |
| | | | | | | | | | | WHITE | 15u" | 7–1734774–5 |
| | | | | | | | | | | | G/F | 7–1734774–4 |
| 8.8 | | | 3.10 | 71.35 | 70 | 73.15 | 89 | 71.65 | 164 | BLACK | 30u" | 7–1734774–3 |
| | | | | | | | | | | WHITE | | 7–1734774–2 |
| 5.5 | | | | 38.35 | 37 | 40.15 | 56 | 38.65 | 98 | BLACK | | 7–1734774–1 |
| | | | | | | | | | | WHITE | | 7–1734774–0 |
| 3.9 | | | | 21.35 | 20 | 23.15 | 39 | 21.65 | 64 | BLACK | | 6–1734774–9 |
| | | | | | | | | | | WHITE | | 6–1734774–8 |
| 2.55 | | | | 7.35 | 6 | 9.15 | 25 | 7.65 | 36 | BLACK | | 6–1734774–7 |
| | | | | | | | | | | WHITE | | 6–1734774–6 |
| 8.8 | | | | 71.35 | 70 | 73.15 | 89 | 71.65 | 164 | BLACK | 15u" | 6–1734774–5 |
| | | | | | | | | | | | G/F | 6–1734774–4 |
| | | | | | | | | | | WHITE | 15u" | 6–1734774–3 |
| | | | | | | | | | | | G/F | 6–1734774–2 |
| 5.5 | | | | 38.35 | 37 | 40.15 | 56 | 38.65 | 98 | BLACK | 15u" | 6–1734774–1 |
| | | | | | | | | | | | G/F | 6–1734774–0 |
| | | | | | | | | | | WHITE | 15u" | 5–1734774–9 |
| | | | | | | | | | | | G/F | 5–1734774–8 |
| 3.9 | | | | 21.35 | 20 | 23.15 | 39 | 21.65 | 64 | BLACK | 15u" | 5–1734774–7 |
| | | | | | | | | | | | G/F | 5–1734774–6 |
| | | | | | | | | | | WHITE | 15u" | 5–1734774–5 |
| | | | | | | | | | | | G/F | 5–1734774–4 |
| 2.55 | | | | 7.35 | 6 | 9.15 | 25 | 7.65 | 36 | BLACK | 15u" | 5–1734774–3 |
| | | | | | | | | | | | G/F | 5–1734774–2 |
| | | | | | | | | | | WHITE | 15u" | 5–1734774–1 |
| | | | | | | | | | | | G/F | 5–1734774–0 |

THIS DRAWING IS A CONTROLLED DOCUMENT.

DIMENSIONS: MM

TOLERANCES UNLESS OTHERWISE SPECIFIED:

| | |
|---|---|
| 0 PLC | ± – |
| 1 PLC | ± 0.3 |
| 2 PLC | ± 0.2 |
| 3 PLC | ± 0.15 |
| 4 PLC | ± – |
| ANGLES | ± 3° |

MATERIAL –

FINISH –

DWN –
CHK –
APVD –
PRODUCT SPEC –
APPLICATION SPEC –
WEIGHT –

TE Connectivity

NAME

PCI EXPRESS CARD EDGE CONNECTOR
VERTICAL, DIP TYPE, 3GIO

| SIZE | CAGE CODE | DRAWING NO | RESTRICTED TO |
|---|---|---|---|
| A3 | 00779 | C–1734774 | – |

CUSTOMER DRAWING | SCALE – | SHEET 2 OF 4 | REV F6

THIS DRAWING IS UNPUBLISHED. RELEASED FOR PUBLICATION AUG ,2006.
© COPYRIGHT – BY TYCO ELECTRONICS CORPORATION. ALL RIGHTS RESERVED.

| LOC | DIST |
|---|---|
| DW | — |

REVISIONS

| P | LTR | DESCRIPTION | DATE | DWN | APVD |
|---|---|---|---|---|---|
| | | SEE SHEET 1. | | | |

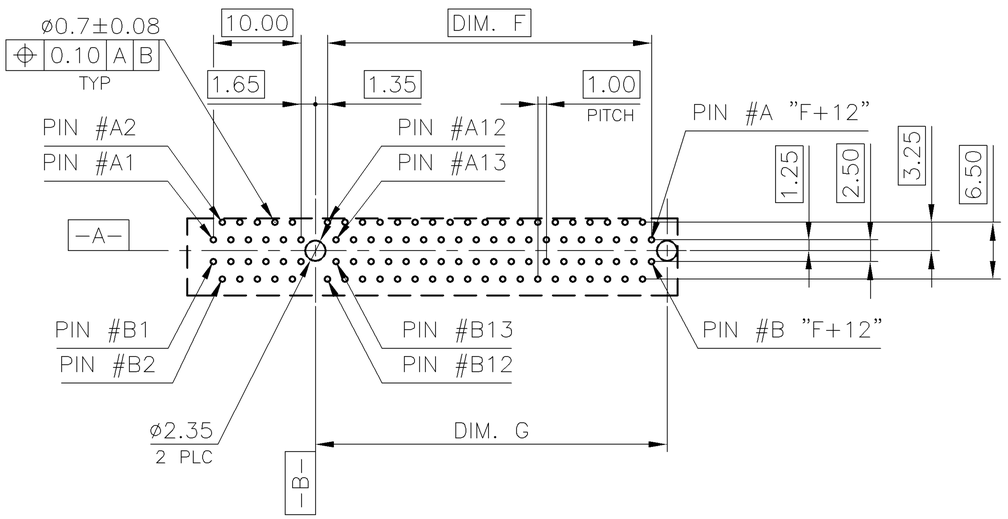


RECOMMENDED PCB LAYOUT

TOLERANCE: ±0.05
FOR DIM.L=3.1mm PCB THICKNESS: 2.4mm
FOR DIM.L=2.3mm PCB THICKNESS: 1.6mm

ADD–IN CARD EDGE–FINGER DIMENSIONS

NOTES:
CHAMFER EDGE MUST BE FREE OF CUTTING BURRS

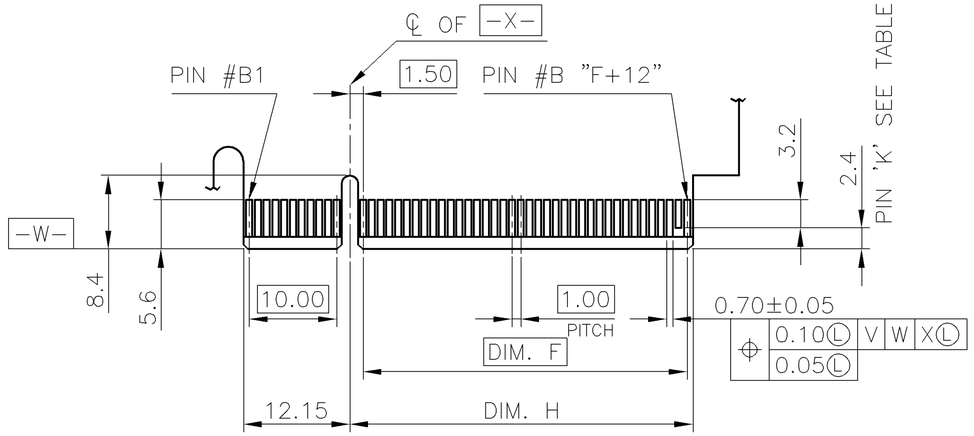


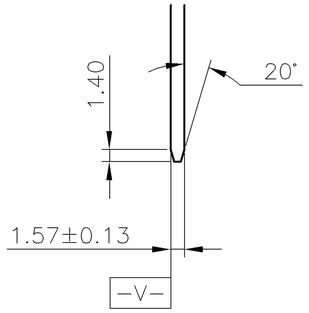


← I/O PANEL DIRECTION
PRIMARY (COMPONENT) SIDE

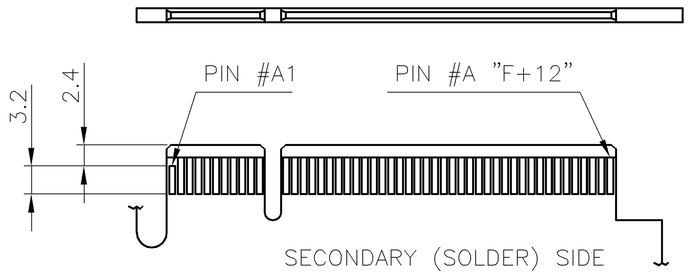


| POS. | DIM. F | DIM. G | DIM. H | "K" |
|---|---|---|---|---|
| 164 | 70.0 | 73.15 | 72.15 | B17, B31, B48, B81 |
| 98 | 37.0 | 40.15 | 39.15 | B17, B31, B48 |
| 64 | 20.0 | 23.15 | 22.15 | B17, B31 |
| 36 | 6.0 | 9.15 | 8.15 | B17 |

THIS DRAWING IS A CONTROLLED DOCUMENT.

DIMENSIONS: MM

TOLERANCES UNLESS OTHERWISE SPECIFIED:
0 PLC ± –
1 PLC ± –
2 PLC ± –
3 PLC ± –
4 PLC ± –
ANGLES ± –

MATERIAL –
FINISH –

DWN –
CHK –
APVD –
PRODUCT SPEC —
APPLICATION SPEC —
WEIGHT —

TE Connectivity

NAME
PCI EXPRESS CARD EDGE CONNECTOR
VERTICAL, DIP TYPE, 3GIO

| SIZE | CAGE CODE | DRAWING NO | RESTRICTED TO |
|---|---|---|---|
| A3 | 00779 | C–1734774 | — |

CUSTOMER DRAWING | SCALE — | SHEET 3 OF 4 | REV F6

THIS DRAWING IS UNPUBLISHED. RELEASED FOR PUBLICATION AUG ,2006.
© COPYRIGHT – BY TYCO ELECTRONICS CORPORATION. ALL RIGHTS RESERVED.

| LOC | DIST |
|---|---|
| DW | — |

REVISIONS

| P | LTR | DESCRIPTION | DATE | DWN | APVD |
|---|---|---|---|---|---|
| | | SEE SHEET 1. | | | |

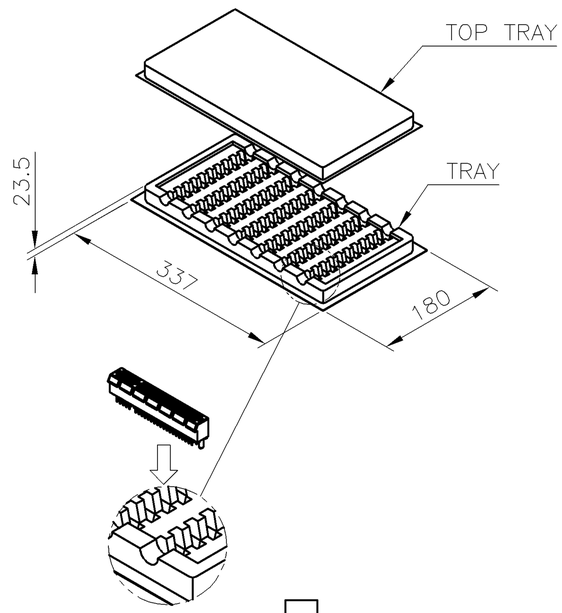


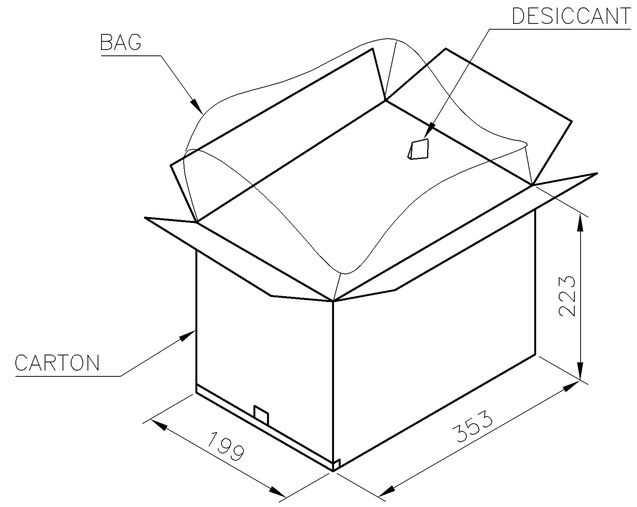


NOTES :
1. MATERIAL :
   TRAY : PVC, COLOR: TRANSPARENT.
   CARTON: CORRUGATED FIBER
   BOX: CORRUGATED FIBER
2. DIMENSION :
   TRAY: SEE DRAWING
   CARTON: SEE DRAWING
   BOX : SEE DRAWING
3. QUANTITY : SEE TABLE
4. WEIGHT : SEE TABLE

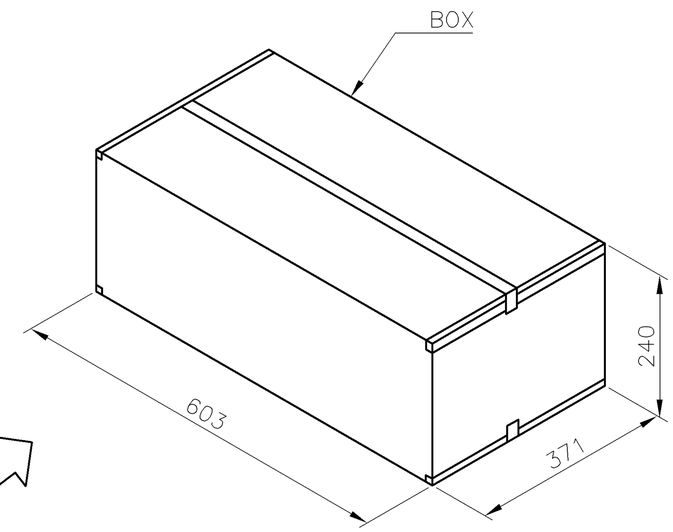


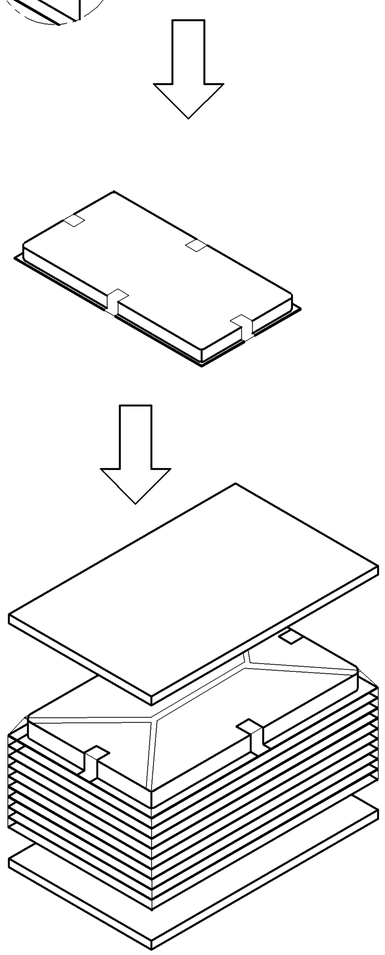

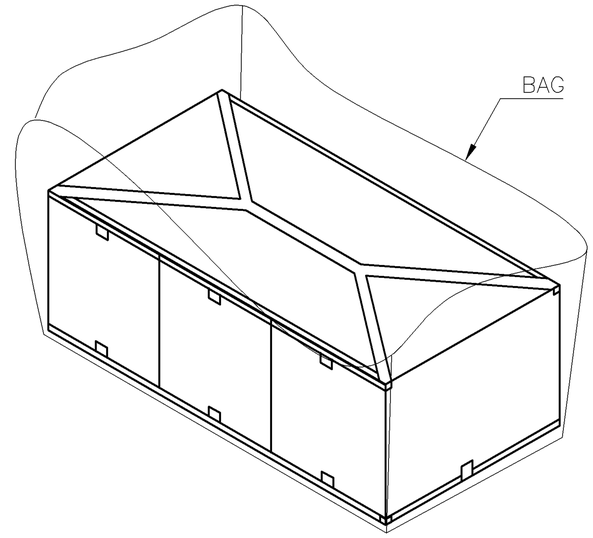


| GROSS WEIGHT | NET WEIGHT | PCS/ TRAY | TRAY/ CARTON | CARTON/ BOX | PCS/ BOX | POS. |
|---|---|---|---|---|---|---|
| 10.2 Kg | 8.2 Kg | 30 | 10 | 3 | 900 | 164 |
| 9.0 Kg | 7.0 Kg | 40 | 10 | 3 | 1200 | 98 |
| 8.5 Kg | 6.5 Kg | 60 | 10 | 3 | 1800 | 64 |
| 7.6 Kg | 5.6 Kg | 70 | 10 | 3 | 2100 | 36 |

THIS DRAWING IS A CONTROLLED DOCUMENT.

DIMENSIONS: MM

TOLERANCES UNLESS OTHERWISE SPECIFIED:
0 PLC ± –
1 PLC ± –
2 PLC ± –
3 PLC ± –
4 PLC ± –
ANGLES ± –

MATERIAL –
FINISH –

DWN –
CHK –
APVD –
PRODUCT SPEC –
APPLICATION SPEC –
WEIGHT –

TE Connectivity

NAME
PCI EXPRESS CARD EDGE CONNECTOR
VERTICAL, DIP TYPE, 3GIO

| SIZE | CAGE CODE | DRAWING NO | RESTRICTED TO |
|---|---|---|---|
| A3 | 00779 | C-1734774 | — |

CUSTOMER DRAWING | SCALE — | SHEET 4 OF 4 | REV F6

Мы молодая и активно развивающаяся компания в области поставок электронных компонентов. Мы поставляем электронные компоненты отечественного и импортного производства напрямую от производителей и с крупнейших складов мира.

Благодаря сотрудничеству с мировыми поставщиками мы осуществляем комплексные и плановые поставки широчайшего спектра электронных компонентов.

Собственная эффективная логистика и склад в обеспечивает надежную поставку продукции в точно указанные сроки по всей России.

Мы осуществляем техническую поддержку нашим клиентам и предпродажную проверку качества продукции. На все поставляемые продукты мы предоставляем гарантию .

Осуществляем поставки продукции под контролем ВП МО РФ на предприятия военно-промышленного комплекса России , а также работаем в рамках 275 ФЗ с открытием отдельных счетов в уполномоченном банке. Система менеджмента качества компании соответствует требованиям ГОСТ ISO 9001.

Минимальные сроки поставки, гибкие цены, неограниченный ассортимент и индивидуальный подход к клиентам являются основой для выстраивания долгосрочного и эффективного сотрудничества с предприятиями радиоэлектронной промышленности, предприятиями ВПК и научно-исследовательскими институтами России.

С нами вы становитесь еще успешнее!

**Наши контакты:**

**Телефон:** +7 812 627 14 35

**Электронная почта:** sales@st-electron.ru

**Адрес:** 198099, Санкт-Петербург, Промышленная ул, дом № 19, литера Н, помещение 100-Н Офис 331