SIDE ROTARY

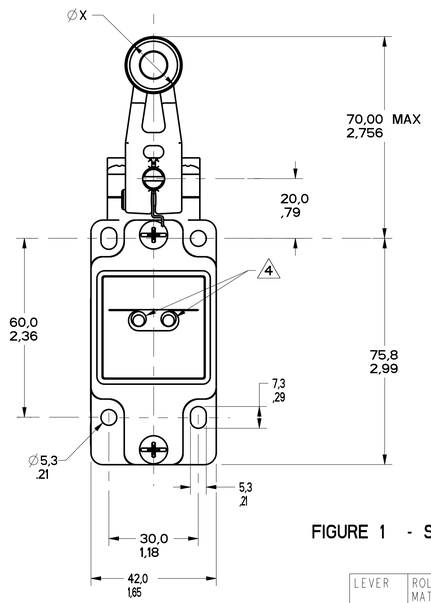

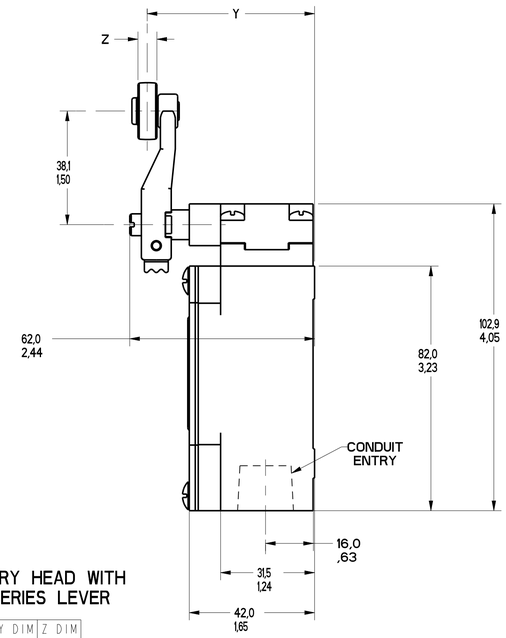

FIGURE 1 - SIDE ROTARY HEAD WITH GLZ51 SERIES LEVER

LEVER	ROLLER MATL	X DIM	Y DIM	Z DIM
GLZ51A	NYLON	19,1 .75	55,9 2.20	6,4 .25
GLZ51B	STEEL	19,1 .75	55,9 2.20	6,4 .25
GLZ51C	NYLON	24,5 1.00	59,1 2.33	12,7 .50
GLZ51Y	RUBBER	50,0 1.97	66,1 2.60	10,0 .39
GLZ51T	STAINLESS STEEL	19,1 .75	56,8 2.24	8,8 .345

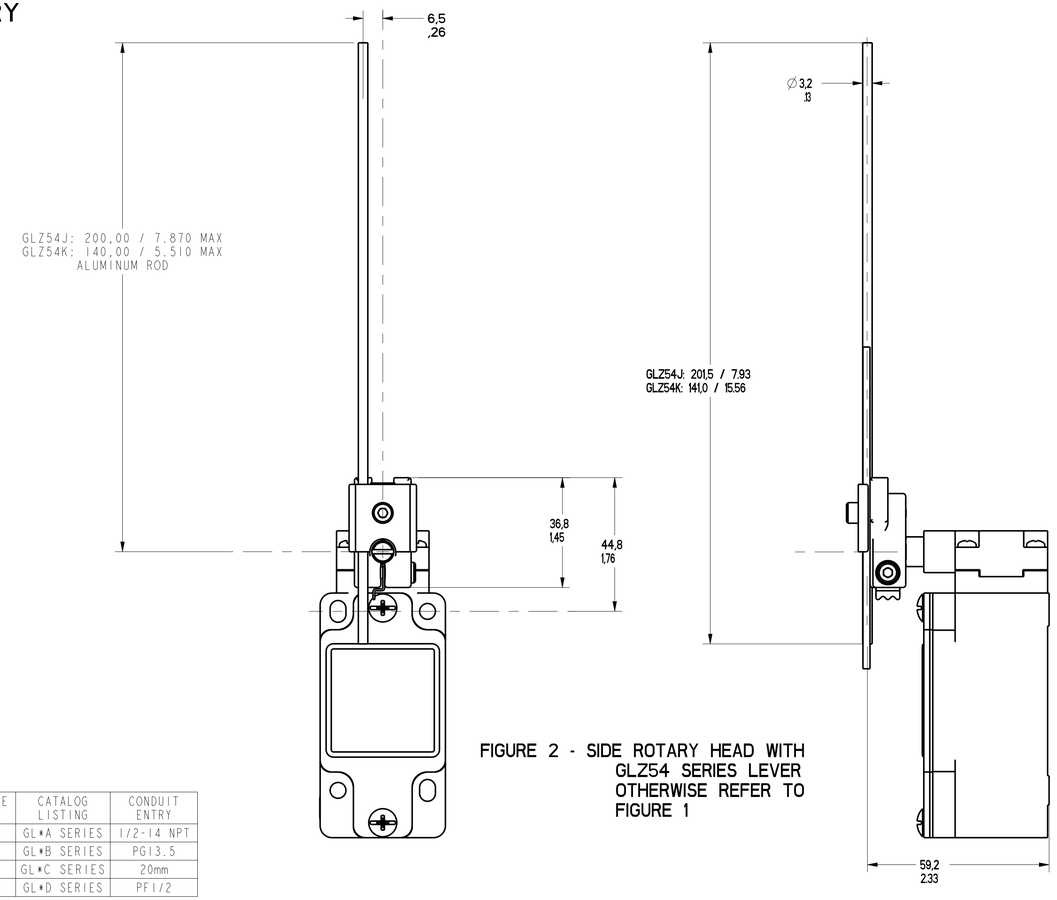

FIGURE 2 - SIDE ROTARY HEAD WITH GLZ54 SERIES LEVER OTHERWISE REFER TO FIGURE 1

FIGURE	CATALOG LISTING	CONDUIT ENTRY
1A	GL*A SERIES	1/2-14 NPT
1B	GL*B SERIES	PG13.5
1C	GL*C SERIES	20mm
1D	GL*D SERIES	PF1/2

ELECTRICAL RATING 5 8				GOLD PLATED CONTACTS
AC		DC		
A600 Ue	AC15 Ie	Q300 Ue	DC13 Ie	
(VOLTS)	(AMPS)	(VOLTS)	(AMPS)	1V 10µA MIN 50V 100mA MAX
120	6	24	2.8	
240	3	125	.55	
380	1.9	250	.27	
480	1.5			
500	1.4			
600	1.2			

ENVIRONMENTAL RATING
IP67 NEMA/UL TYPES 1, 4, 12, 13

CATALOG LISTING	BODY DIMENSIONS, FIGURE	HEAD DIMENSIONS, FIGURE	HEAD ACTUATION, FIGURE
GLA****	1	N/A	N/A
GLF****	1	N/A	N/A
GLH****	1	N/A	N/A
GL*A***	1A	N/A	N/A
GL*B***	1B	N/A	N/A
GL*C***	1C	N/A	N/A
GL*D***	1D	N/A	N/A
GL****A1*	1	1	8
GL****A2*	1	3	9
GL****A4*	1	2	10
GL****A5*	1		8
GL****B	1	4	11
GL****C	1	5	13A, 13B
GL****D	1	6	14A, 14B
GL****E7A	1	7A	12
GL****E7B	1	7	12
GL****E7C	1	7E	15
GL****E7D	1	7B	12
GL****K8A	1	7C	15
GL****K8B	1	7D	15
GL****K8C	1	7	15

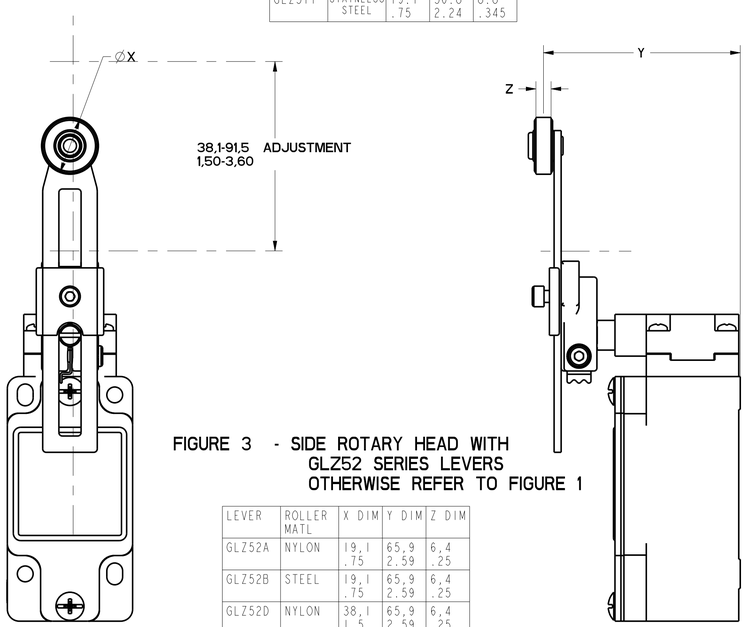

FIGURE 3 - SIDE ROTARY HEAD WITH GLZ52 SERIES LEVERS OTHERWISE REFER TO FIGURE 1

LEVER	ROLLER MATL	X DIM	Y DIM	Z DIM
GLZ52A	NYLON	19,1 .75	65,9 2.59	6,4 .25
GLZ52B	STEEL	19,1 .75	65,9 2.59	6,4 .25
GLZ52D	NYLON	38,1 1.5	65,9 2.59	6,4 .25
GLZ52E	NYLON	19,1 .75	79,37 3.125	33,07 1.300
GLZ52W	RUBBER	40,0 1.6	71,5 2.81	12,7 .5
GLZ52Y	RUBBER	50,0 1.97	68,8 2.71	10,0 .39

NOTES
1 - HEADS MAY BE INDEXED IN 90° INCREMENTS
2 - LEVERS MAY BE KEYED TO THE SHAFT AT 90° INCREMENTS. THEY MAY ALSO BE ATTACHED, BUT NOT KEYED ANYWHERE ON THE SHAFT.
3 - FOR ADDITIONAL LEVERS SEE "M" DRAWING CHART GLZ5
4 THE LEFT INDICATOR IS GREEN AND INDICATES "POWER ON" IT IS ON GLH SERIES PRODUCTS ONLY. THE RIGHT INDICATOR IS YELLOW AND INDICATES "OUTPUT STATUS" IT IS ON GLF AND GLH SERIES PRODUCTS ONLY.
5 THE MAXIMUM VOLTAGE, Ve OF GLF AND GLH SERIES PRODUCTS IS THE MAXIMUM RATED VOLTAGE OF INDICATION LIGHTS
6 FREE POSITION, OPERATE POINT, OVERTRAVEL AND PRETRAVEL ALL TO EN50041
7 CAM TRAVEL FOR FIG 9 ONLY APPLIES WHEN LEVER IS ADJUSTED TO 38,1 / 1.50
8 THE MAXIMUM VOLTAGE, Ve OF "06" AND "36" BASIC SWITCH CODE IS 300V (A300)
9 TEMPERATURE RANGE
(ALL PRODUCTS EXCEPT w/SIDE ROTARY OPERATING HEAD)
OPERATING: -25°C TO +85°C / -13°F TO +185°F
STORAGE: -40°C TO +85°C / -40°F TO +185°F
(PRODUCTS w/SIDE ROTARY OPERATING HEAD)
OPERATING: -40°C TO +85°C / -40°F TO +185°F
STORAGE: -40°C TO +85°C / -40°F TO +185°F

ANSI Y14.5M-1982 APPLIES

THIS DRAWING COVERS A PROPRIETARY ITEM AND IS THE PROPERTY OF MICRO SWITCH, A DIVISION OF HONEYWELL. THIS DRAWING IS NOT TO BE COPIED OR USED WITHOUT THE APPROVAL OF MICRO SWITCH.

FED. MFG. CODE 91929
MICRO SWITCH a Honeywell Division

SWITCH, ENCLOSED

CATALOG LISTING
GL SERIES CHART 1

THIRD ANGLE PROJECTION
SCALE 1:1
DO NOT SCALE PRINT

TOLERANCES
APPLY TO DESIGN UNITS. CONVERSIONS ARE ONLY FOR REFERENCE. UNLESS NOTED, TOLERANCES ARE ±:

	DIM mm	TOL mm/m	DIM in	TOL inch/ft
NO PLACES	X	1/.08	X.X	0.39/.015
ONE PLACE	X.X	0.4/.016	X.XX	0.197/.005
TWO PLACES	X.XX	0.15/.006	X.XXX	0.127/.005
THREE PLACES	X.XXX	±0.25		
ANGLES		±2°		

DESIGN UNITS: SI METRIC ☒ US CUSTOMARY ☐
WEIGHT

M GL SERIES CHART 1 | PAGE 1 OF 13 | REPLACES | RELEASE NO. PR-20782 | DRAWING NO. 16 | ISSUE | 20OC12 | CHECK CMH | REVISIONS: F 0000401 GLH 24JAN03; G 0002986 RS 20JAN04; H 0023759 RKP 07AUG06; J 0037216 RS 08FEB08; K 0043629 SP 12SEP08; L 0048605 YKS 09FEB09; M 0070059 JM 05OC10; N 0094570 SBN 12OC12 | 05OC10 | CMH | 07AUG06 | DVM | 27MAR96 | DRAWN S A V | PTC/CAD

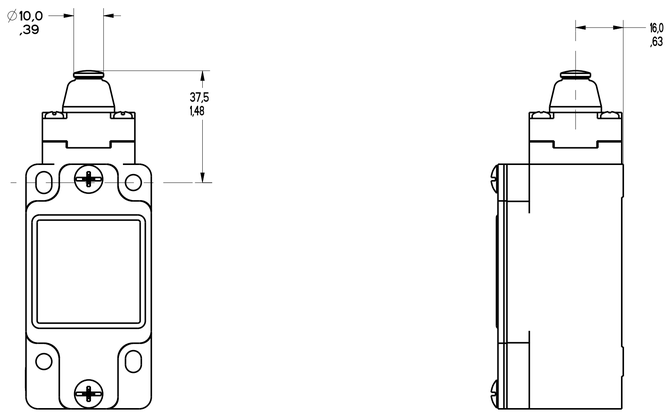

FIGURE 4 - TOP PIN PLUNGER HEAD OTHERWISE REFER TO FIGURE 1

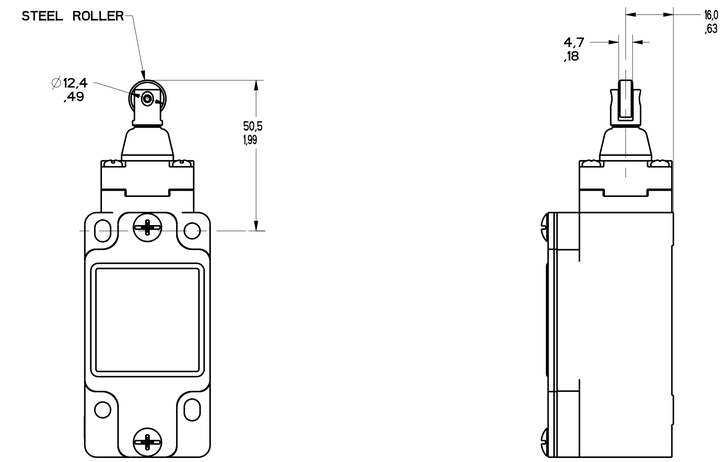

FIGURE 5 - TOP ROLLER PLUNGER HEAD OTHERWISE REFER TO FIGURE 1

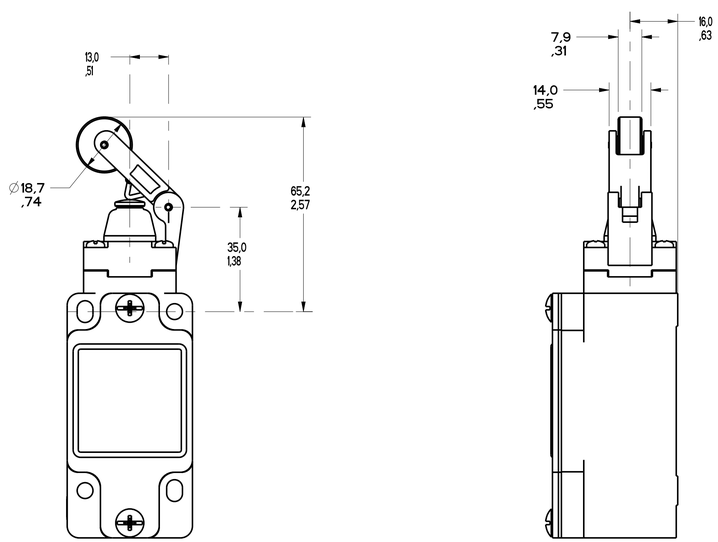

FIGURE 6 - TOP LEVER HEAD, OTHERWISE REFER TO FIGURE 1

REVISIONS			
F	0000401		
G	GLH 0002986		
H	SK 0.00004		
H	0023759		
H	RKP 0.00004		
H	0037216	CMH	
H	DS 0.00004		
K	0043629		
K	DS 0.00004		
L	0048605		
L	VKS 0.00009		
M	0070059	26AUG93	
M	DS 0.00010		
N	0094570	GLH	
N	SBM 0.00012		

DRAWING NUMBER	20CT12	CMH	26AUG93
RELEASE NO	PR-20782		
PAGE	2 OF 13		
REPLACES			
ISSUE	16		

M GL SERIES CHART 1

PTC/CAD

DRAWN W L S 26AUG93

THIS DRAWING COVERS A PROPRIETARY ITEM AND IS THE PROPERTY OF MICRO SWITCH, A DIVISION OF HONEYWELL. THIS DRAWING IS NOT TO BE COPIED OR USED WITHOUT THE APPROVAL OF MICRO SWITCH.

FED. MFG. CODE 91929

MICRO SWITCH a Honeywell Division

SWITCH, ENCLOSED

CATALOG LISTING

GL SERIES CHART 1

ANSI Y14.5M-1982 APPLIES

THIRD ANGLE PROJECTION

SCALE 1:1

DO NOT SCALE PRINT

TOLERANCES

APPLY TO DESIGN UNITS. CONVERSIONS ARE ONLY FOR REFERENCE. UNLESS NOTED, TOLERANCES ARE ±

	SI mm	TOL mm/in	US in	TOL mm/in
NO PLACES	X	1/.04	X.X	0.8/.03
ONE PLACE	X.X	0.4/.016	X.XX	0.38/.015
TWO PLACES	X.XX	0.15/.006	X.XXX	0.13/.005
THREE PLACES				
ANGLES		±2°		

DESIGN UNITS SI METRIC [X] US CUSTOMARY [ ]

WEIGHT

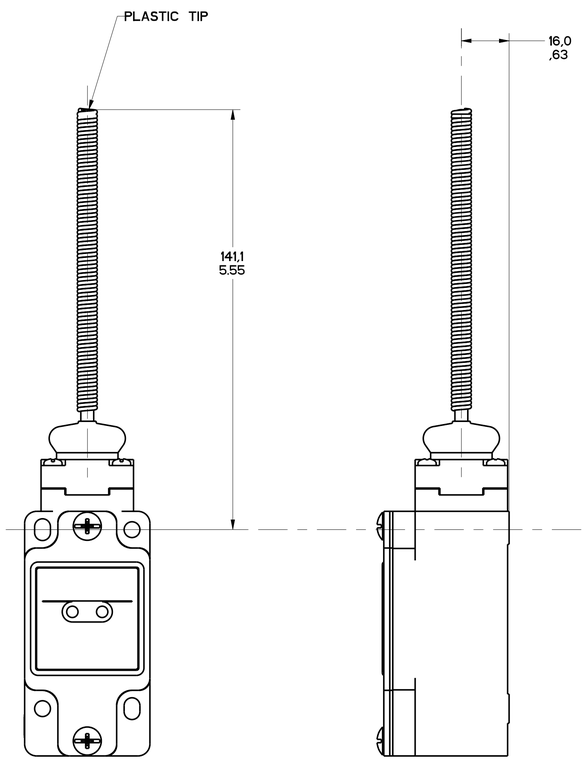

FIGURE 7 - WOBBLE HEAD, AND CAT WISKER HEAD COIL ACTUATOR, OTHERWISE REFER TO FIGURE 1

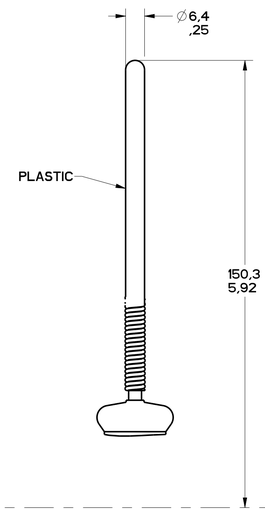

FIGURE 7A - WOBBLE HEAD, PLASTIC ACTUATOR, OTHERWISE SAME AS FIGURE 7

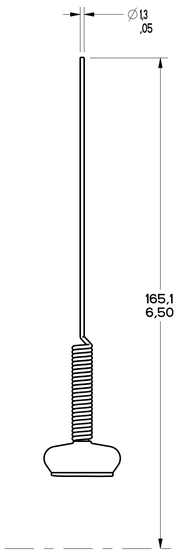

FIGURE 7B - WOBBLE HEAD STAINLESS STEEL SPRING ACTUATOR, OTHERWISE SAME AS FIGURE 7

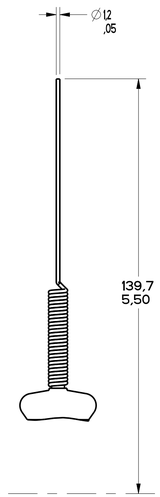

FIGURE 7C - CAT WHISKER ACTUATOR, STAINLESS STEEL SPRING, OTHERWISE SAME AS FIGURE 7

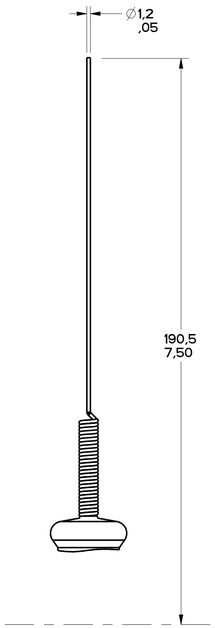

FIGURE 7D - CAT WHISKER ACTUATOR, STAINLESS STEEL SPRING, OTHERWISE SAME AS FIGURE 7

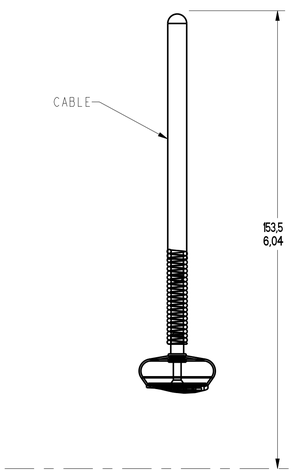

FIGURE 7E - CABLE WOBBLE ACTUATOR, OTHERWISE SAME AS FIGURE 7

M GL SERIES CHART 1 | PAGE 3 OF 13 | RELEASE NO. PR-21557 | REPLACES
DRAWING NUMBER 16 | ISSUE | CHK'D CMH | 12OCT12

REVISIONS

E	0000401	GLN 4JUN03	
F	0002986	PS 10JAN04	
H	0023759	RKP 27AUG06	CMH
J	0037216	PS 08FEB08	CHK'D
K	0043629	PS 25SEP08	96
L	0048605	VKS 09FEB09	
M	0010059	SN 05OCT10	7 MAY
N	0094510	SBH 12OCT12	S A V

CHK'D S A V | 7 MAY 96
DRAWN S A V | 7 MAY 96
PTC/CAD

THIS DRAWING COVERS A PROPRIETARY ITEM AND IS THE PROPERTY OF MICRO SWITCH, A DIVISION OF HONEYWELL. THIS DRAWING IS NOT TO BE COPIED OR USED WITHOUT THE APPROVAL OF MICRO SWITCH.

FED. MFG. CODE 91929
MICRO SWITCH a Honeywell Division

SWITCH, ENCLOSED

CATALOG LISTING
GL SERIES CHART 1

ANSI Y14.5M-1982 APPLIES

THIRD ANGLE PROJECTION

SCALE 1:1

DO NOT SCALE PRINT

TOLERANCES
APPLY TO DESIGN UNITS. CONVERSIONS ARE ONLY FOR REFERENCE. UNLESS NOTED, TOLERANCES ARE ±

	DIM mm	TOL mm±	DIM in	TOL in±
NO PLACES	X	1/128	X	0.01/.03
ONE PLACE	X.X	0.1/.016	X.X	0.01/.015
TWO PLACES	X.XX	0.13/.006	X.XX	0.13/.005
THREE PLACES				
ANGLES		±2°		

DESIGN UNITS: SI METRIC ☒ | US CUSTOMARY ☐

WEIGHT

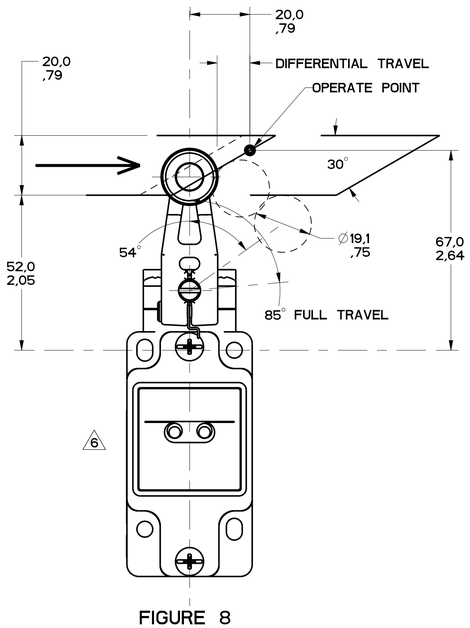

FIGURE 8

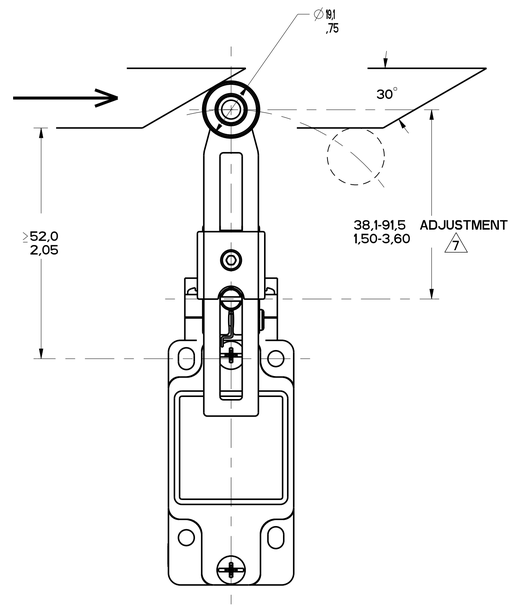

FIGURE 9

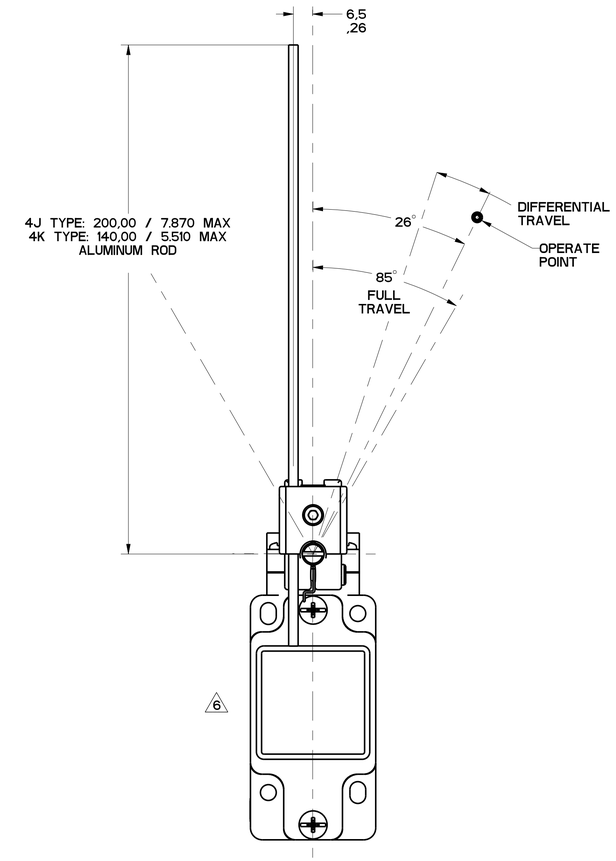

FIGURE 10

| REVISIONS | | |

FIGURES 8, 9, 10 SIDE ROTARY HEAD, ANGULAR ACTUATION

CATALOG LISTING	CONTACT BLOCK DIAGRAM	NOMINAL TRAVELS AND RELATED TERMINALS ■ - CONTACT CLOSED, □ - CONTACT OPEN, ▨ - CONTACT CLOSED DIFFERENTIAL TRAVEL, ** POSITIVE OPENING TO IEC 947-5-1	MAXIMUM OPERATING TORQUE N-m / LB-IN	MAXIMUM DISCONNECT TORQUE N-m / LB-IN	MAX OPERATE DEGREE/S	MIN OPERATE DEGREE/S	MAX OPERATE FREQUENCY OPS/MIN
GL**01A GL**07A	SNAP - ACTION CONTACTS SINGLE POLE Zb	21-22, 13-14: 26° 55**° 85°; 12° DIFFERENTIAL TRAVEL	.330 / 2.9	.385 / 3.4	1290	13	250
GL**03A GL**33A	SLOW ACTING BREAK BEFORE MAKE Zb	21-22, 13-14: 26**° 85°; 38°	.330 / 2.9	.385 / 3.4	1290	13	250
GL**04A GL**34A	SLOW ACTING MAKE BEFORE BREAK Zb	21-22, 13-14: 38**° 85°; 26°	.330 / 2.9	.400 / 3.5	1290	13	250
GL**05A GL**35A	SLOW ACTING 2X	13-14, 23-24: 38° 85°	.330 / 2.9	.385 / 3.4	1290	13	250
GL**06A GL**36A	SLOW ACTING 2Y	11-12, 21-22: 26**° 85°	.330 / 2.9	.385 / 3.4	1290	13	250
GL**20A GL**22A GL**24A GL**32A	SNAP ACTION CONTACTS DOUBLE POLE	11-12, 21-22, 13-14, 23-24: 26° 55**° 85°; 12° DIFFERENTIAL TRAVEL	.330 / 2.9	.385 / 3.4	1290	13	250
GL**21A GL**25A GL**28A GL**31A	STEP 1, STEP 2 SNAP ACTION CONTACTS DOUBLE POLE SEQUENCIAL	11-12, 13-14, 21-22, 23-24: 27 42; 8 DIFFERENTIAL TRAVEL; 8 DIFFERENTIAL TRAVEL	.330 / 2.9	N/A	1290	13	250

SIDE ROTARY HEAD, CAM ACTUATION PER EN50041, FIGURES 8 AND 9 ⚠

CATALOG LISTING	CONTACT BLOCK DIAGRAM	NOMINAL TRAVELS AND RELATED TERMINALS ■ - CONTACT CLOSED, □ - CONTACT OPEN, ▨ - CONTACT CLOSED DIFFERENTIAL TRAVEL, ** POSITIVE OPENING TO IEC 947-5-1 DIMENSIONS IN mm	MAXIMUM OPERATING FORCE N / LB	MAXIMUM DISCONNECT FORCE N / LB	MAX OPERATE VEL M/S / in/S	MIN OPERATE VEL mm/S / in/S	MAX OPERATE FREQUENCY OPS/MIN
GL**01A GL**07A	SNAP - ACTION CONTACTS SINGLE POLE Zb	21-22, 13-14: 0 20 56**; 12 DIFFERENTIAL TRAVEL	9.7 / 2.2	11.4 / 2.6	.85 / 33.5	8.5 / .33	250
GL**03A GL**33A	SLOW ACTING BREAK BEFORE MAKE Zb	21-22, 13-14: 0 20**; 32	9.7 / 2.2	11.4 / 2.6	.85 / 33.5	8.5 / .33	250
GL**04A GL**34A	SLOW ACTING MAKE BEFORE BREAK Zb	21-22, 13-14: 0 32; 20	9.7 / 2.2	11.4 / 2.6	.85 / 33.5	8.5 / .33	250
GL**05A GL**35A	SLOW ACTING 2X	13-14, 23-24: 0 32° 85°	9.7 / 2.2	11.4 / 2.6	.85 / 33.5	8.5 / .33	250
GL**06A GL**36A	SLOW ACTING 2Y	11-12, 21-22: 0 20**	9.7 / 2.2	11.4 / 2.6	.85 / 33.5	8.5 / .33	250
GL**20A GL**22A GL**24A GL**32A	SNAP ACTION CONTACTS DOUBLE POLE	11-12, 21-22, 13-14, 23-24: 0 20 56**; 12 DIFFERIENTIAL TRAVEL	9.7 / 2.2	11.8 / 2.7	.85 / 33.5	8.5 / .33	250
GL**21A GL**25A GL**28A GL**31A	STEP 1, STEP 2 SNAP ACTION CONTACTS DOUBLE POLE SEQUENCIAL	11-12, 13-14, 21-22, 23-24: 0 20 38.5; 8.5 DIFFERENTIAL TRAVEL; 7 DIFFERENTIAL TRAVEL	9.7 / 2.2	N/A	.85 / 33.5	8.5 / .33	250
GL**26J GL**27J GL**29J GL**30J	CCW, CW SNAP ACTION CONTACTS DOUBLE POLE CENTER NEUTRAL	11-12, 13-14, 21-22, 23-24: 0 16; 8 DIFFERENTIAL TRAVEL; 8 DIFFERENTIAL TRAVEL	9.7 / 2.2	N/A	.85 / 33.5	8.5 / .33	250

ANSI Y14.5M-1982 APPLIES

THIS DRAWING COVERS A PROPRIETARY ITEM AND IS THE PROPERTY OF MICRO SWITCH. A DIVISION OF HONEYWELL. THIS DRAWING IS NOT TO BE COPIED OR USED WITHOUT THE APPROVAL OF MICRO SWITCH.

FED. MFG. CODE 91929
MICRO SWITCH a Honeywell Division

SWITCH, ENCLOSED

CATALOG LISTING: GL SERIES CHART 1

THIRD ANGLE PROJECTION

SCALE

DO NOT SCALE PRINT

TOLERANCES
APPLY TO DESIGN UNITS, CONVERSIONS ARE ONLY FOR REFERENCE. UNLESS NOTED, TOLERANCES ARE ±

	DIM mm	TOL mm/in	DIM in	TOL mm/in
NO PLACES	X.	1/.06	X.	0.5/.03
TWO PLACES	X.XX	0.4/.016	X.XX	0.38/.015
THREE PLACES	X.XXX	0.15/.006	X.XXX	0.13/.005
ANGLES				

DESIGN UNITS: SI METRIC ☐ US CUSTOMARY ☐

WEIGHT

M GL SERIES CHART 1 — PAGE 5 OF 13 — RELEASE NO. PR-20782 — REPLACES

DRAWING NUMBER 16 — ISSUE 16 — 20CT12 CMH

REVISIONS
F 0000401 GLN 4JUN73
G 0002986 RS 23JAN84
H 0023759 RKF 07AUG06
J 0037216 BS 08FEB08
K 0043629 SS 12SEP08
L 0048605 YRS 09FEB09
M 0070059 SS 05OCT10
N 0094570 SBH 10OCT12

050CT10 CMH — CHECK CMH — CHECK 26AUG93 GLH — CHECK GLH — CHECK 26AUG93 WLS — DRAWN

PTC/CAD

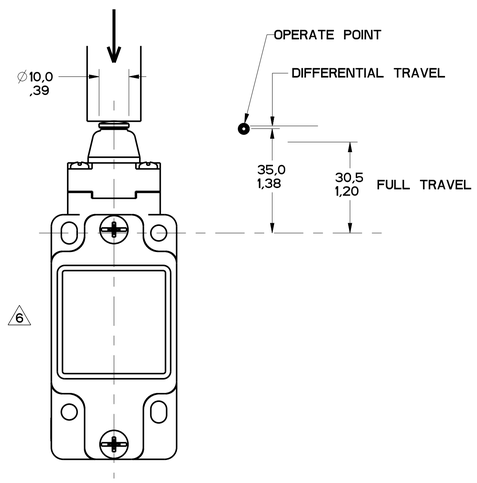

FIGURE 11

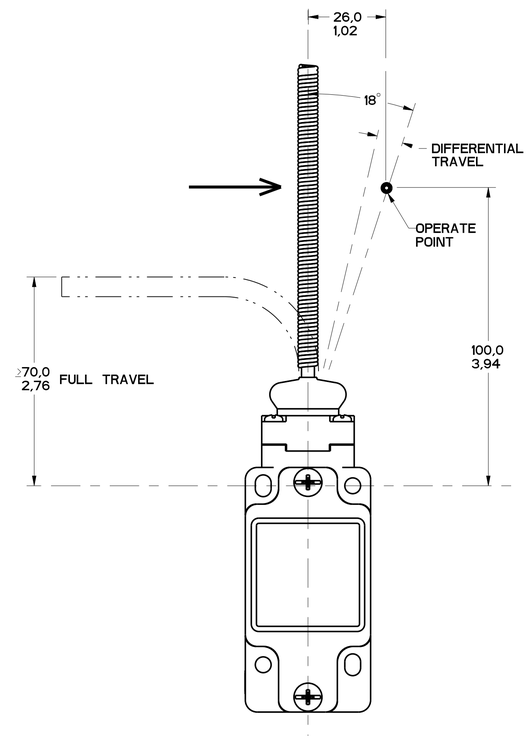

FIGURE 12

THIS DRAWING COVERS A PROPRIETARY ITEM AND IS THE PROPERTY OF MICRO SWITCH, A DIVISION OF HONEYWELL. THIS DRAWING IS NOT TO BE COPIED OR USED WITHOUT THE APPROVAL OF MICRO SWITCH.

FED. MFG. CODE 91929

MICRO SWITCH a Honeywell Division

SWITCH, ENCLOSED

CATALOG LISTING

GL SERIES CHART 1

THIRD ANGLE PROJECTION

SCALE 1:1

DO NOT SCALE PRINT

TOLERANCES

APPLY TO DESIGN UNITS. CONVERSIONS ARE ONLY FOR REFERENCE. UNLESS NOTED, TOLERANCES ARE ±

	SYM mm	TOL mm/in	SYM in	TOL mm/in
NO PLACES	X	1/.04		
ONE PLACE	X.X	0.4/.016	X.X	0.8/.03
TWO PLACES	X.XX	0.13/.005	X.XX	0.381/.015
THREE PLACES			X.XXX	0.13/.005
ANGLES		±2°		

SI METRIC ☒ US CUSTOMARY ☐

DESIGN UNITS

WEIGHT

ANSI Y14.5M-1982 APPLIES

PTC/CAD 3D

DRAWN W L S 26AUG93

CHECK GLH 26AUG93

CHECK CMH 05OCT10

REVISIONS
F 0000401 GLH 7JUN83
G 0002986 RS 7JAN84
H 0023759 RKP 07AUG86
J 0037216 RS 08SEP88
K 0043629 RS 12SEP88
L 0048605 RKS 09SEP89
M 0070059 DA 05OCT10
N 0094570 SBH 10OCT12

ISSUE 16

DRAWING NUMBER M

PAGE 6 OF 13

RELEASE NO. PR-20782

REPLACES -

GL SERIES CHART 1

FIGURES 11, PIN PLUNGER HEAD, LINEAR ACTUATION

CATALOG LISTING	CONTACT BLOCK DIAGRAM	NOMINAL TRAVELS AND RELATED TERMINALS ■- CONTACT CLOSED, □- CONTACT OPEN, ▨- CONTACT CLOSED DIFFERENTIAL TRAVEL, ** POSITIVE OPENING TO IEC 947-5-1	MAXIMUM OPERATING FORCE N/LB	MAXIMUM DISCONNECT FORCE N/LB	MAX OPERATE VEL M/S in/S	MIN OPERATE VEL mm/S in/S	MAX OPERATE FREQUENCY OPS/MIN
GL**01B GL**07B	SNAP - ACTION CONTACTS SINGLE POLE Zb	37.5 35 33** 30.5 21-22 >, 13-14 < 0.9 DIFFERENTIAL TRAVEL	16/3.6	27/6.0	0.1/3.9	1.0/.04	250
GL**03B GL**33B	SLOW ACTING BREAK BEFORE MAKE Zb	37.5 35** 30.5 21-22 >, 13-14 < 34	16/3.6	27/6.0	0.1/3.9	1.0/.04	250
GL**04B GL**34B	SLOW ACTING MAKE BEFORE BREAK Zb	37.5 34** 30.5 21-22 >, 13-14 < 35	16/3.6	27/6.0	0.1/3.9	1.0/.04	250
GL**05B GL**35B	SLOW ACTING 2X	37.5 34 30.5 13-14 >, 23-24 <<	16/3.6	27/6.0	0.1/3.9	1.0/.04	250
GL**06B GL**36B	SLOW ACTING 2Y	37.5 35** 30.5 11-12 >, 21-22 << 34	16/3.6	27/6.0	0.1/3.9	1.0/.04	250
GL**20B GL**22B GL**24B GL**32B	SNAP ACTION CONTACTS DOUBLE POLE	37.5 35 33** 30.5 11-12, 21-22 >, 13-14, 23-24 << 0.9 DIFFERENTIAL TRAVEL	16/3.6	37/8.2	0.1/3.9	1.0/.04	250
GL**21B GL**25B GL**28B GL**31B	STEP 1 STEP 2 SNAP ACTION CONTACTS DOUBLE POLE SEQUENCIAL	37.5 35 33.8 30.5 11-12 >, 13-14 <, 21-22 >, 23-24 << .8 DIFFERENTIAL TRAVEL .8 DIFFERENTIAL TRAVEL	16/3.6	N/A	0.1/3.9	1.0/.04	250

FIGURE 12, WOBBLE HEAD, ANGULAR ACTUATION

CATALOG LISTING	CONTACT BLOCK DIAGRAM	NOMINAL TRAVELS AND RELATED TERMINALS ■- CONTACT CLOSED, □- CONTACT OPEN, ▨- CONTACT CLOSED DIFFERENTIAL TRAVEL, ** POSITIVE OPENING TO IEC 947-5-1	MAXIMUM OPERATING TORQUE N-m/LB/in	MAXIMUM DISCONNECT TORQUE N-m/LB/in	MAX OPERATE DEGREE/S	MIN OPERATE VELOCITY DEGREE/S	MAX OPERATE RATE CYCLES/MIN
GL**01E GL**07E	SNAP - ACTION CONTACTS SINGLE POLE Zb	18° 21-22 >, 13-14 << 8° DIFFERENTIAL TRAVEL	0.2/1.8	N/A	360	8	100
GL**03E GL**33E	SLOW ACTING BREAK BEFORE MAKE Zb	0° 18° 25° 35° 21-22 >, 13-14 <<	0.2/1.8	N/A	360	8	100
GL**04E GL**34E	SLOW ACTING MAKE BEFORE BREAK Zb	0° 18° 25° 35° 21-22 >, 13-14 <<	0.2/1.8	N/A	360	8	100
GL**05E GL**35E	SLOW ACTING 2X	0° 25° 35° 13-14 >, 23-24 <<	0.2/1.8	N/A	360	8	100
GL**06E GL**36E	SLOW ACTING 2Y	0° 18° 35° 11-12 >, 21-22 <<	0.2/1.8	N/A	360	8	100
GL**20E GL**22E GL**24E GL**32E	SNAP ACTION CONTACTS DOUBLE POLE	18° 11-12, 21-22 >, 13-14, 23-24 << 8° DIFFERENTIAL TRAVEL	0.2/1.8	N/A	360	8	100

FIGURE 12, WOBBLE HEAD, SIDE ACTUATION AT 100mm

CATALOG LISTING	CONTACT BLOCK DIAGRAM	NOMINAL TRAVELS AND RELATED TERMINALS ■- CONTACT CLOSED, □- CONTACT OPEN, ▨- CONTACT CLOSED DIFFERENTIAL TRAVEL, ** POSITIVE OPENING TO IEC 947-5-1	MAXIMUM OPERATING FORCE N/LB	MAXIMUM DISCONNECT FORCE N/LB	MAX OPERATE VEL M/S in/S	MIN OPERATE VEL mm/S in/S	MAX OPERATE FREQUENCY OPS/MIN
GL**01E GL**07E	SNAP - ACTION CONTACTS SINGLE POLE Zb	26 21-22 >, 13-14 << 12 DIFFERENTIAL TRAVEL	2.5/0.6	N/A	.5/19.7	11/.43	100
GL**03E GL**33E	SLOW ACTING BREAK BEFORE MAKE Zb	26.5 38.1 21-22 >, 13-14 <<	2.5/0.6	N/A	.5/19.7	11/.43	100
GL**04E GL**34E	SLOW ACTING MAKE BEFORE BREAK Zb	26.5 38.1 21-22 >, 13-14 <<	2.5/0.6	N/A	.5/19.7	11/.43	100
GL**05E GL**35E	SLOW ACTING 2X	38.1 13-14 >, 23-24 <<	2.5/0.6	N/A	.5/19.7	11/.43	100
GL**06E GL**36E	SLOW ACTING 2Y	26.5 11-12 >, 21-22 <<	2.5/0.6	N/A	.5/19.7	11/.43	100
GL**20E GL**22E GL**24E GL**32E	SNAP ACTION CONTACTS DOUBLE POLE	26 11-12, 21-22 >, 13-14, 23-24 <<	2.5/0.6	N/A	360	8	100

THIRD ANGLE PROJECTION

SCALE - -

DO NOT SCALE PRINT

TOLERANCES
APPLY TO DESIGN UNITS. CONVERSIONS ARE ONLY FOR REFERENCE. UNLESS NOTED, TOLERANCES ARE ±

	DIM mm	TOL mm/in	DIM in	TOL mm/in
NO PLACES	X.	±1/.04	X.X	0.8/.03
ONE PLACE	X.X	0.4/.016	X.XX	0.38/.015
TWO PLACES	X.XX	0.15/.006	X.XXX	0.13/.005
THREE PLACES				
ANGLES		±2°		

SI METRIC ☒ US CUSTOMARY ☐

DESIGN UNITS

WEIGHT

THIS DRAWING COVERS A PROPRIETARY ITEM AND IS THE PROPERTY OF MICRO SWITCH. A DIVISION OF HONEYWELL. THIS DRAWING IS NOT TO BE COPIED OR USED WITHOUT THE APPROVAL OF MICRO SWITCH.

FED. MFG. CODE 91929
MICRO SWITCH a Honeywell Division

SWITCH, ENCLOSED

CATALOG LISTING
GL SERIES CHART 1

ANSI Y14.5M-1982 APPLIES

M GL SERIES CHART 1 | PAGE 7 OF 13 | RELEASE NO. PR-20782 | REPLACES
DRAWING OWNER M | ISSUE 16 | 12OCT12 CMH CHECK
REVISIONS
E 0005401 GLN 4JUN93
G 0002986 RS 20JAN94
H 0023759 RKP 07AUG06
J 0037216 BS 08FEB08
K 0043629 BS 12SEP08
L 0048605 VKS 09FEB09
M 0070059 BS 05OCT10
N 0094570 SBH 12OCT12
05OCT10 CMH CHECK | 26AUG93 GLH CHECK | 20AUG93 W L S DRAWN | PTC/CAD

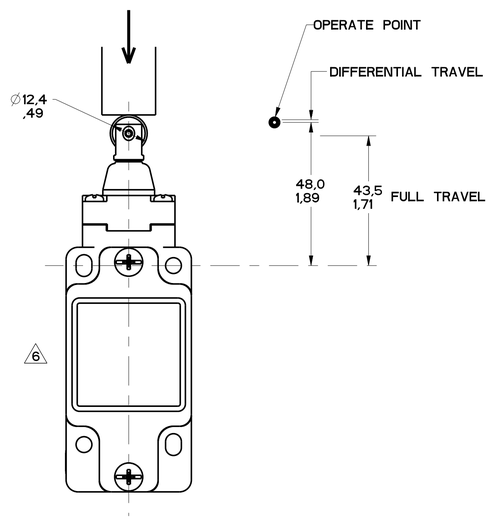

FIGURE 13A

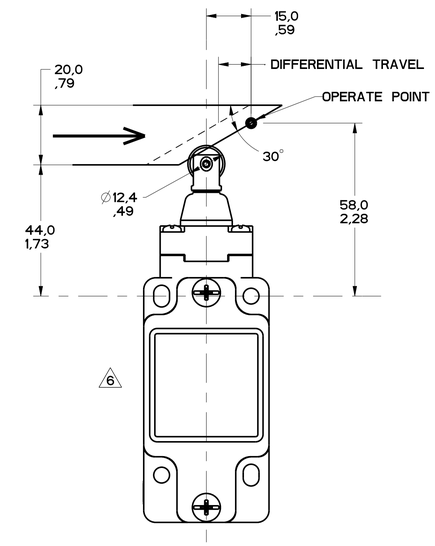

FIGURE 13B

THIS DRAWING COVERS A PROPRIETARY ITEM AND IS THE PROPERTY OF MICRO SWITCH, A DIVISION OF HONEYWELL. THIS DRAWING IS NOT TO BE COPIED OR USED WITHOUT THE APPROVAL OF MICRO SWITCH.

FED. MFG. CODE 91929

MICRO SWITCH a Honeywell Division

SWITCH, ENCLOSED

CATALOG LISTING

GL SERIES CHART 1

THIRD ANGLE PROJECTION

SCALE 1:1

DO NOT SCALE PRINT

TOLERANCES

APPLY TO DESIGN UNITS. CONVERSIONS ARE ONLY FOR REFERENCE. UNLESS NOTED, TOLERANCES ARE ±

	SYM mm	TOL mm/in	SYM in	TOL mm/in
NO PLACES	X	1/.04	X.X	0.8/.03
ONE PLACE	X.X	0.4/.016	X.XX	0.38/.015
TWO PLACES	X.XX	0.15/.006	X.XXX	0.13/.005
THREE PLACES				
ANGLES		±2°		

SI METRIC X

US CUSTOMARY

DESIGN UNITS

WEIGHT

ANSI Y14.5M-1982 APPLIES

DRAWN	W L S	20APR93	CHECK	GLH	26AUG93
			CHECK	CMH	05OCT10
			CHECK	CMH	12OCT12

PTC/CAD

REVISIONS

F	0000401	7 GLH 7JUN83	
G	0002986	8 RS 7JAN84	
H	0023759	9 KKP 07AUG06	
J	0037216	10 RS 08FEB08	
K	0043629	11 RS 12SEP08	
L	0048605	12 YKS 09FEB09	
M	0070059	13 RS 05OCT10	
N	0094570	14 SBH 12OCT12	

DRAWING NUMBER 16

ISSUE

M GL SERIES CHART 1

PAGE 8 OF 13

RELEASE NO. PR-20182

REPLACES

FIGURE 13A, ROLLER PLUNGER HEAD, PIN ACTUATION

CATALOG LISTING	CONTACT BLOCK DIAGRAM	NOMINAL TRAVELS AND RELATED TERMINALS ■- CONTACT CLOSED, □- CONTACT OPEN, ▨- CONTACT CLOSED DIFFERENTIAL TRAVEL, ** POSITIVE OPENING TO IEC 947-5-1	MAXIMUM OPERATING FORCE N/LB	MAXIMUM DISCONNECT FORCE N/LB	MAX OPERATE VEL M/S in/S	MIN OPERATE VEL mm/S in/S	MAX OPERATE FREQUENCY OPS/MIN
GL**01C GL**07C	SNAP - ACTION CONTACTS SINGLE POLE Zb	50.5 48 46** 43.5 21-22 >, 13-14 < 0.9 DIFFERENTIAL TRAVEL	16/3.6	27/6.0	0.1/3.9	1.0/.04	250
GL**03C GL**33C	SLOW ACTING BREAK BEFORE MAKE Zb	50.5 48** 43.5 21-22 >, 13-14 < 47	16/3.6	27/6.0	0.1/3.9	1.0/.04	250
GL**04C GL**34C	SLOW ACTING MAKE BEFORE BREAK Zb	50.5 47** 43.5 21-22 >, 13-14 < 48	16/3.6	27/6.0	0.1/3.9	1.0/.04	250
GL**05C GL**35C	SLOW ACTING 2X	50.5 47 43.5 13-14 >, 23-24 <<	16/3.6	27/6.0	0.1/3.9	1.0/.04	250
GL**06C GL**36C	SLOW ACTING 2Y	50.5 48** 43.5 11-12 >, 21-22 <<	16/3.6	27/6.0	0.1/3.9	1.0/.04	250
GL**20C GL**22C GL**24C GL**32C	SNAP ACTION CONTACTS DOUBLE POLE	50.5 48 46** 43.5 11-12, 21-22 >, 13-14, 23-24 << 0.9 DIFFERENTIAL TRAVEL	16/3.6	37/8.2	0.1/3.9	1.0/.04	250
GL**21C GL**25C GL**28C GL**31C	STEP 1 / STEP 2 SNAP ACTION CONTACTS DOUBLE POLE SEQUENCIAL	50.5 48 46.8 43.5 11-12 >, 13-14 <, 21-22 >, 23-24 << .8 DIFFERENTIAL TRAVEL .8 DIFFERENTIAL TRAVEL	16/3.6	N/A	0.1/3.9	1.0/.04	250

FIGURE 13B, TOP ROLLER PLUNGER HEAD, CAM ACTUATION PER EN50041

CATALOG LISTING	CONTACT BLOCK DIAGRAM	NOMINAL TRAVELS AND RELATED TERMINALS ■- CONTACT CLOSED, □- CONTACT OPEN, ▨- CONTACT CLOSED DIFFERENTIAL TRAVEL, ** POSITIVE OPENING TO IEC 947-5-1	MAXIMUM OPERATING FORCE N/LB	MAXIMUM DISCONNECT FORCE N/LB	MAX OPERATE VEL M/S in/S	MIN OPERATE VEL mm/S in/S	MAX OPERATE FREQUENCY OPS/MIN
GL**01C GL**07C	SNAP - ACTION CONTACTS SINGLE POLE Zb	0 15 18.3** 21-22 >, 13-14 << 1.8 DIFFERENTIAL TRAVEL	9.3/2.1	15.6/3.5	0.17/6.7	1.7/.067	250
GL**03C GL**33C	SLOW ACTING BREAK BEFORE MAKE Zb	0 15** 21-22 >, 13-14 << 16.8	9.3/2.1	15.6/3.5	0.17/6.7	1.7/.067	250
GL**04C GL**34C	SLOW ACTING MAKE BEFORE BREAK Zb	0 16.8** 21-22 >, 13-14 << 15	9.3/2.1	15.6/3.5	0.17/6.7	1.7/.067	250
GL**05C GL**35C	SLOW ACTING 2X	0 16.8 13-14 >, 23-24 <<	9.3/2.1	15.6/3.5	0.17/6.7	1.7/.067	250
GL**06C GL**36C	SLOW ACTING 2Y	0 15** 21-22 >, 13-14 <<	9.3/2.1	15.6/3.5	0.17/6.7	1.7/.067	250
GL**20C GL**22C GL**24C GL**32C	SNAP ACTION CONTACTS DOUBLE POLE	0 15 18.3** 11-12, 21-22 >, 13-14, 23-24 << 1.8 DIFFERIENTIAL TRAVEL	9.3/2.1	21.4/4.8	0.17/6.7	1.7/.067	250
GL**21C GL**25C GL**28C GL**31C	STEP 1 / STEP 2 SNAP ACTION CONTACTS DOUBLE POLE SEQUENCIAL	0 15 16.9 11-12 >, 13-14 <, 21-22 >, 23-24 << 1.4 DIFFERENTIAL TRAVEL 1.4 DIFFERENTIAL TRAVEL	9.3/2.1	N/A	0.17/6.7	1.7/.067	250

ANSI Y14.5M-1982 APPLIES

THIS DRAWING COVERS A PROPRIETARY ITEM AND IS THE PROPERTY OF MICRO SWITCH, A DIVISION OF HONEYWELL. THIS DRAWING IS NOT TO BE COPIED OR USED WITHOUT THE APPROVAL OF MICRO SWITCH.

FED. MFG. CODE 91929
MICRO SWITCH a Honeywell Division

SWITCH, ENCLOSED

CATALOG LISTING
GL SERIES CHART 1

THIRD ANGLE PROJECTION
SCALE -
DO NOT SCALE PRINT
TOLERANCES
APPLY TO DESIGN UNITS. CONVERSIONS ARE ONLY FOR REFERENCE. UNLESS NOTED, TOLERANCES ARE ±

	DIM mm	TOL mm	DIM in	TOL inch
NO PLACES	X.	1/.04	X.X	0.8/.03
ONE PLACE	X.X	0.4/.016	X.XX	0.38/.015
TWO PLACES	X.XX	0.15/.006	X.XXX	0.13/.005
THREE PLACES				
ANGLES		±2°		

DESIGN UNITS: SI METRIC [X] US CUSTOMARY [ ]
WEIGHT

M GL SERIES CHART 1 PAGE 9 OF 13 RELEASE NO. PR-20782 REPLACES
DRAWING NO. 16 ISSUE
DRAWN W.L.S. 05MAR01 CHECK SAV 05MAR01
PTC/CAD
REVISIONS
F 0000401 GLH 24JAN03
G 0002986 RS 20JAN04
H 0023759 RKP 07AU006
J 0037216 RS 08FE008
K 0043629 SS 12SEP08
L 0048605 YKS 09FE009
M 0070059 SA 05OCT10
N 0094570 SBH 10OCT12
DRAWN CHECK CMH 12OCT12 CHECK CMH 05OCT10 CHECK CMH CHECK

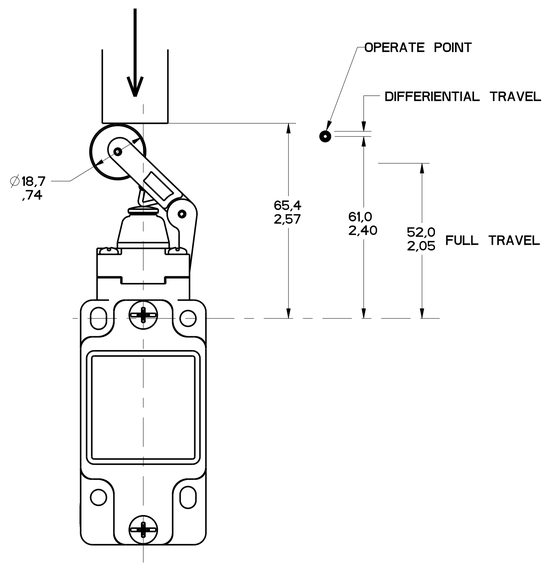

FIGURE 14A

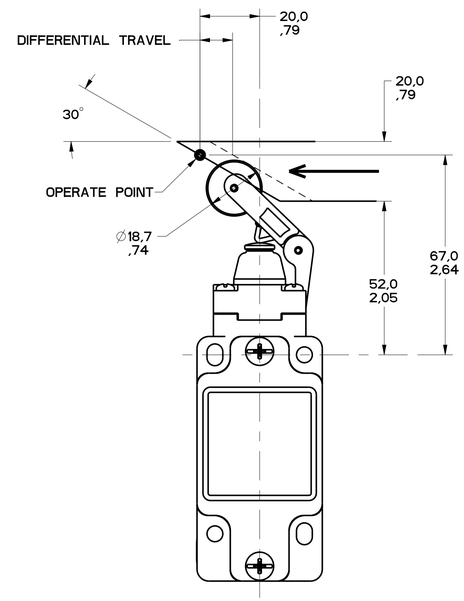

FIGURE 14B

THIS DRAWING COVERS A PROPRIETARY ITEM AND IS THE PROPERTY OF MICRO SWITCH, A DIVISION OF HONEYWELL. THIS DRAWING IS NOT TO BE COPIED OR USED WITHOUT THE APPROVAL OF MICRO SWITCH.

FED. MFG. CODE 91929

MICRO SWITCH a Honeywell Division

SWITCH, ENCLOSED

CATALOG LISTING

GL SERIES CHART 1

THIRD ANGLE PROJECTION

SCALE 1:1

DO NOT SCALE PRINT

TOLERANCES

APPLY TO DESIGN UNITS. CONVERSIONS ARE ONLY FOR REFERENCE. UNLESS NOTED, TOLERANCES ARE ±

	SYM mm	TOL mm/in	SYM in	TOL mm/in
NO PLACES	X	1/.04	X.X	0.8/.03
ONE PLACE	X.X	0.4/.016	X.XX	0.38/.015
TWO PLACES	X.XX	0.15/.006	X.XXX	0.13/.005
THREE PLACES				
ANGLES		±2°		

SI METRIC ☒ US CUSTOMARY ☐

DESIGN UNITS

WEIGHT

ANSI Y14.5M-1982 APPLIES

PTC/CAD 3D									
DRAWN	GLH	02MAR01	CHECK	SAV	02MAR01	CHECK	CMH	050CT10	CHECK

FIGURE 14A, TOP ROLLER LEVER HEAD WITH PIN ACTUATION

CATALOG LISTING	CONTACT BLOCK DIAGRAM	NOMINAL TRAVELS AND RELATED TERMINALS ■ - CONTACT CLOSED, □ - CONTACT OPEN, ▨ - CONTACT CLOSED DIFFERENTIAL TRAVEL, ** POSITIVE OPENING TO IEC 947-5-1	MAXIMUM OPERATING FORCE N/LB	MAXIMUM DISCONNECT FORCE N/LB	MAX OPERATE VEL M/S in/S	MIN OPERATE VEL M/S in/S	MAX OPERATE FREQUENCY OPS/MIN
GL**01D GL**07D	SNAP - ACTION CONTACTS SINGLE POLE Zb	65.2; 21-22, 13-14; 61; 56.9**; 52; 1.7 DIFFERENTIAL TRAVEL	9.5/2.1	12/2.7	0.17/6.7	1.7/.067	250
GL**03D GL**33D	SLOW ACTING BREAK BEFORE MAKE Zb	65.2; 21-22, 13-14; 61**; 52; 59.1	9.5/2.1	12/2.7	0.17/6.7	1.7/.067	250
GL**04D GL**34D	SLOW ACTING MAKE BEFORE BREAK Zb	65.2; 21-22, 13-14; 59.1**; 52; 61	9.5/2.1	12/2.7	0.17/6.7	1.7/.067	250
GL**05D GL**35D	SLOW ACTING 2X	65.2; 13-14, 23-24; 59.1; 52	9.5/2.1	12/2.7	0.17/6.7	1.7/.067	250
GL**06D GL**36D	SLOW ACTING 2Y	65.2; 11-12, 21-22; 61**; 52	9.5/2.1	12/2.7	0.17/6.7	1.7/.067	250
GL**20D GL**22D GL**24D GL**32D	SNAP ACTION CONTACTS DOUBLE POLE	65.2; 11-12, 21-22, 13-14, 23-24; 61; 56.9**; 52; 1.7 DIFFERIENTIAL TRAVEL	9.5/2.1	16.4/3.7	0.17/6.7	1.7/.067	250
GL**21D GL**25D GL**28D GL**31D	STEP 1, STEP 2 SNAP ACTION CONTACTS DOUBLE POLE SEQUENCIAL	65.2; 11-12, 13-14, 21-22, 23-24; 61; 58.6; 1.6 DIFFERENTIAL TRAVEL; 1.6 DIFFERENTIAL TRAVEL	9.5/2.1	N/A	0.17/6.7	1.7/.067	250

FIGURE 14B, TOP ROLLER LEVER HEAD WITH CAM ACTUATION

CATALOG LISTING	CONTACT BLOCK DIAGRAM	NOMINAL TRAVELS AND RELATED TERMINALS ■ - CONTACT CLOSED, □ - CONTACT OPEN, ▨ - CONTACT CLOSED DIFFERENTIAL TRAVEL, ** POSITIVE OPENING TO IEC 947-5-1	MAXIMUM OPERATING FORCE N/LB	MAXIMUM DISCONNECT FORCE N/LB	MAX OPERATE VEL M/S in/S	MIN OPERATE VEL mm/S in/S	MAX OPERATE FREQUENCY OPS/MIN
GL**01D GL**07D	SNAP - ACTION CONTACTS SINGLE POLE Zb	0; 21-22, 13-14; 20; 29.1**; 4.1 DIFFERENTIAL TRAVEL	5.5/1.2	7.0/1.6	0.29/11.4	2.9/.11	250
GL**03D GL**33D	SLOW ACTING BREAK BEFORE MAKE Zb	0; 21-22, 13-14; 20**; 24.1	5.5/1.2	7.0/1.6	0.29/11.4	2.9/.11	250
GL**04D GL**34D	SLOW ACTING MAKE BEFORE BREAK Zb	0; 21-22, 13-14; 24.1**; 20	5.5/1.2	9.6/2.2	0.29/11.4	2.9/.11	250
GL**05D GL**35D	SLOW ACTING 2X	0; 13-14, 23-24; 24.1	5.5/1.2	7.0/1.6	0.29/11.4	2.9/.11	250
GL**06D GL**36D	SLOW ACTING 2Y	0; 11-12, 21-22; 20**	5.5/1.2	7.0/1.6	0.29/11.4	2.9/.11	250
GL**20D GL**22D GL**24D GL**32D	SNAP ACTION CONTACTS DOUBLE POLE	0; 11-12, 21-22, 13-14, 23-24; 20; 29.1**; 4.1 DIFFERIENTIAL TRAVEL	5.5/1.2	7.0/1.6	0.29/11.4	2.9/.11	250
GL**21D GL**25D GL**28D GL**31D	STEP 1, STEP 2 SNAP ACTION CONTACTS DOUBLE POLE SEQUENCIAL	0; 11-12, 13-14, 21-22, 23-24; 20; 25.5; 3.7 DIFFERENTIAL TRAVEL; 3.7 DIFFERENTIAL TRAVEL	5.5/1.2	N/A	0.29/11.4	2.9/.11	250

THIS DRAWING COVERS A PROPRIETARY ITEM AND IS THE PROPERTY OF MICRO SWITCH, A DIVISION OF HONEYWELL. THIS DRAWING IS NOT TO BE COPIED OR USED WITHOUT THE APPROVAL OF MICRO SWITCH.

FED. MFG. CODE 91929
MICRO SWITCH a Honeywell Division

SWITCH, ENCLOSED

CATALOG LISTING: GL SERIES CHART 1

ANSI Y14.5M-1982 APPLIES

THIRD ANGLE PROJECTION
SCALE -
DO NOT SCALE PRINT
TOLERANCES
APPLY TO DESIGN UNITS. CONVERSIONS ARE ONLY FOR REFERENCE. UNLESS NOTED, TOLERANCES ARE ±

	DIM mm	TOL mm/in	DIM in	TOL mm/in
NO PLACES	X.	1/.04	X.	0.8/.03
ONE PLACE	X.X	0.4/.016	X.XX	0.38/.015
TWO PLACES	X.XX	0.15/.006	X.XXX	0.13/.005
THREE PLACES				
ANGLES		±2°		

DESIGN UNITS: SI METRIC ☒ US CUSTOMARY ☐
WEIGHT

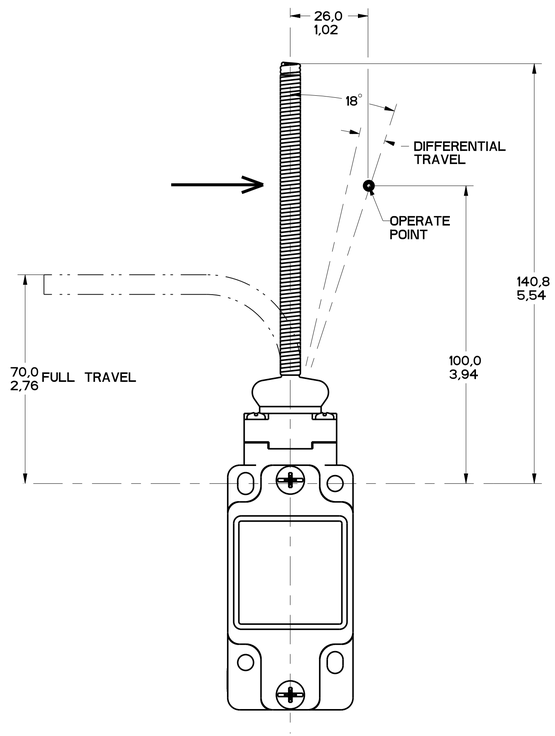

FIGURE 15

THIS DRAWING COVERS A PROPRIETARY ITEM AND IS THE PROPERTY OF MICRO SWITCH, A DIVISION OF HONEYWELL. THIS DRAWING IS NOT TO BE COPIED OR USED WITHOUT THE APPROVAL OF MICRO SWITCH.

FED. MFG. CODE 91929

MICRO SWITCH a Honeywell Division

SWITCH, ENCLOSED

CATALOG LISTING

GL SERIES CHART 1

ANSI Y14.5M-1982 APPLIES

THIRD ANGLE PROJECTION

SCALE 1:1

DO NOT SCALE PRINT

TOLERANCES

APPLY TO DESIGN UNITS. CONVERSIONS ARE ONLY FOR REFERENCE. UNLESS NOTED, TOLERANCES ARE ±

	DIM mm	TOL mm/in	DIM in	TOL mm/in
NO PLACES	X	1/.04	X.X	0.8/.03
ONE PLACE	X.X	0.4/.016	X.XX	0.38/.015
TWO PLACES	X.XX	0.15/.006	X.XXX	0.13/.005
THREE PLACES				
ANGLES		±2°		

DESIGN UNITS: SI METRIC ☒ US CUSTOMARY ☐

WEIGHT

PTC/CAD 3D	DRAWN GLH 05MAR01	CHECK SAV 05MAR01	CHECK CMH 05OCT10	CHECK CMH 20CT12	DRAWING NUMBER M GL SERIES CHART 1
					ISSUE 16
					PAGE 12 OF 13
					RELEASE NO. -
					REPLACES -

REVISIONS

F	0000401	
G	0002986	GLH 2JUN03
H	0023759	RS 20JAN04
J	0037216	RKP 07AUG06
K	0043629	RS 08FEB08
L	0048605	SAV 12SEP08
M	0070059	SAV 09FEB09
N	0094570	SBH 10OCT10

FIGURE 15, CAT WISKER HEAD, ANGULAR ACTUATION

CATALOG LISTING	CONTACT BLOCK DIAGRAM	NOMINAL TRAVELS AND RELATED TERMINALS ■ - CONTACT CLOSED, □ - CONTACT OPEN, ▨ - CONTACT CLOSED DIFFERENTIAL TRAVEL	MAXIMUM OPERATING TORQUE N-m / LB-IN	MAXIMUM DISCONNECT TORQUE N-m / LB-IN	MAX OPERATE DEGREE/S	MIN OPERATE VELOCITY DEGREE/S	MAX OPERATE RATE CYCLES/MIN
GL**01K GL**07K	SNAP - ACTION CONTACTS SINGLE POLE Zb	18° 21-22 13-14 8° DIFFERENTIAL TRAVEL	0.1 / .9	N/A	360	8	100
GL**03K GL**33K	SLOW ACTING BREAK BEFORE MAKE Zb	18° 21-22 13-14 25	0.1 / .9	N/A	360	8	100
GL**04K GL**34K	SLOW ACTING MAKE BEFORE BREAK Zb	25° 21-22 13-14 18°	0.1 / .9	N/A	360	8	100
GL**05K GL**35K	SLOW ACTING 2X	25° 13-14 23-24	0.1 / .9	N/A	360	8	100
GL**06K GL**36K	SLOW ACTING 2Y	18° 11-12 21-22	0.1 / .9	N/A	360	8	100
GL**20K GL**22K GL**24K GL**32K	SNAP ACTION CONTACTS DOUBLE POLE	18° 11-12, 21-22 13-14, 23-24 8° DIFFERENTIAL TRAVEL	0.1 / .9	N/A	360	8	100

FIGURE 15, CAT WISKER HEAD, SIDE ACTUATION AT 100mm

CATALOG LISTING	CONTACT BLOCK DIAGRAM	NOMINAL TRAVELS AND RELATED TERMINALS ■ - CONTACT CLOSED, □ - CONTACT OPEN, ▨ - CONTACT CLOSED DIFFERENTIAL TRAVEL	MAXIMUM OPERATING FORCE N / LB	MAXIMUM DISCONNECT FORCE N / LB	MAX OPERATE VEL M/S / in/S	MIN OPERATE VEL mm/S / in/S	MAX OPERATE FREQUENCY OPS/MIN
GL**01K GL**07K	SNAP - ACTION CONTACTS SINGLE POLE Zb	26 21-22 13-14 12 DIFFERENTIAL TRAVEL	1.3 / .3	N/A	.5 / 19.7	11 / .43	100
GL**03K GL**33K	SLOW ACTING BREAK BEFORE MAKE Zb	26.5 38.1 21-22 13-14	1.3 / 0.3	N/A	.5 / 19.7	X11 / .43	100
GL**04K GL**34K	SLOW ACTING MAKE BEFORE BREAK Zb	26.5 38.1 21-22 13-14	1.3 / 0.3	N/A	.5 / 19.7	11 / .43	100
GL**05K GL**35K	SLOW ACTING 2X	38.1 21-22 13-14	1.3 / 0.3	N/A	.5 / 19.7	11 / .43	100
GL**06K GL**36K	SLOW ACTING 2Y	26.5 11-12 21-22	1.3 / 0.3	N/A	.5 / 19.7	11 / .43	100
GL**20K GL**22K GL**24K GL**32K	SNAP ACTION CONTACTS DOUBLE POLE	26 11-12, 21-22 13-14, 23-24 12 DIFFERENTIAL TRAVEL	1.3 / 0.3	N/A	.5 / 19.7	11 / .43	100

THIS DRAWING COVERS A PROPRIETARY ITEM AND IS THE PROPERTY OF MICRO SWITCH, A DIVISION OF HONEYWELL. THIS DRAWING IS NOT TO BE COPIED OR USED WITHOUT THE APPROVAL OF MICRO SWITCH.

FED. MFG. CODE 91929
MICRO SWITCH a Honeywell Division

SWITCH, ENCLOSED

CATALOG LISTING
GL SERIES CHART 1

ANSI Y14.5M-1982 APPLIES

THIRD ANGLE PROJECTION

SCALE -

DO NOT SCALE PRINT

TOLERANCES
APPLY TO DESIGN UNITS. CONVERSIONS ARE ONLY FOR REFERENCE. UNLESS NOTED, TOLERANCES ARE ±

	DIM. mm	TOL. mm/in	DIM. in	TOL. mm/in
NO PLACES	X	1/.04	X.X	0.8/.03
ONE PLACE	X.X	0.4/.016	X.XX	0.38/.015
TWO PLACES	X.XX	0.15/.006	X.XXX	0.13/.005
THREE PLACES				
ANGLES	±2°			

DESIGN UNITS: SI METRIC ☒ US CUSTOMARY ☐

WEIGHT

M GL SERIES CHART 1 | PAGE 13 OF 13 | REPLACES - | RELEASE NO. - | DRAWING NO. OWNER | ISSUE 16 | 20OCT12 CMH CHECK

REVISIONS
F 0000401 GLH 20JUN03
G 0002986 RS 20JAN04
H 0023759 REP 07AUG06 CMH CHECK
J 0037216 RS 08FEB08
K 0043629 RS 12SEP08
L 0048605 REP 09FEB09 CHECK
M 0070059 DR 05OCT10 SAV 05MAR01
N 0094570 SBH 13OCT12 CHECK

PTC/CAD 3D | DRAWN GLH 05MAR01

Мы молодая и активно развивающаяся компания в области поставок электронных компонентов. Мы поставляем электронные компоненты отечественного и импортного производства напрямую от производителей и с крупнейших складов мира.

Благодаря сотрудничеству с мировыми поставщиками мы осуществляем комплексные и плановые поставки широчайшего спектра электронных компонентов.

Собственная эффективная логистика и склад в обеспечивает надежную поставку продукции в точно указанные сроки по всей России.

Мы осуществляем техническую поддержку нашим клиентам и предпродажную проверку качества продукции. На все поставляемые продукты мы предоставляем гарантию .

Осуществляем поставки продукции под контролем ВП МО РФ на предприятия военно-промышленного комплекса России , а также работаем в рамках 275 ФЗ с открытием отдельных счетов в уполномоченном банке. Система менеджмента качества компании соответствует требованиям ГОСТ ISO 9001.

Минимальные сроки поставки, гибкие цены, неограниченный ассортимент и индивидуальный подход к клиентам являются основой для выстраивания долгосрочного и эффективного сотрудничества с предприятиями радиоэлектронной промышленности, предприятиями ВПК и научно-исследовательскими институтами России.

С нами вы становитесь еще успешнее!

Наши контакты:

Телефон: +7 812 627 14 35

Электронная почта: sales@st-electron.ru

Адрес: 198099, Санкт-Петербург, Промышленная ул, дом № 19, литера Н, помещение 100-Н Офис 331