Aluminum electrolytic capacitors

Capacitors with screw terminals

Series/Type: **B43743, B43763**

Date: December 2019

© TDK Electronics AG 2019. Reproduction, publication and dissemination of this publication, enclosures hereto and the information contained therein without TDK Electronics' prior express consent is prohibited.

Long-life grade capacitors

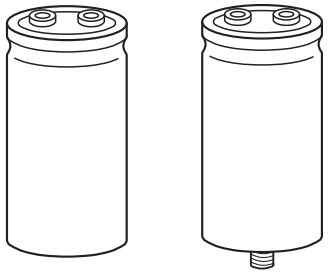

B43743 B43763

Applications
- Power electronics
- Traction
- Professional power supplies

Features
- Outstanding reliability
- Good thermal characteristics
- Long useful life
- Wide temperature range
- Outstanding ripple current capability
- All-welded construction ensures reliable electrical contact
- PAPR terminals available (Protection Against Polarity Reversal)
- Version available with an optimized base cooling design (heat sink mounting) and featuring up to 2 times the ripple current capability
- RoHS-compatible

Construction
- Charge-discharge proof, polar
- Aluminum case, insulated with PET sleeve
- Version with PVC insulation available upon request
- Poles with screw terminal connections
- Mounting with ring clips, clamps or threaded stud
- Types with threaded stud are available with or without insulated base

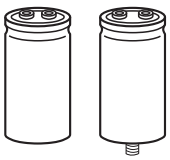

Specifications and characteristics in brief

Rated voltage V_R Surge voltage V_S	350 ... 500 V DC $1.10 \cdot V_R$	
Rated capacitance C_R Capacitance tolerance	1000 ... 18000 µF ±20% ≙ M	
Dissipation factor tan δ (20 °C, 120 Hz)	≤ 0.20	
Leakage current I_{leak} (20 °C, 5 min)	$I_{leak} \leq 0.018\ \mu A \cdot \left(\frac{C_R}{\mu F} \cdot \frac{V_R}{V}\right)^{0.85} + 4\ \mu A$	
Self-inductance ESL	approx. 20 nH	
Useful life[1)] 105 °C; V_R; $I_{AC,R}$	> 6000 h	Requirements: $\lvert\Delta C/C\rvert$ ≤ 15% of initial value tan δ ≤ 1.75 times initial specified limit I_{leak} ≤ initial specified limit
Voltage endurance test 105 °C; V_R	2000 h	Post test requirements: $\lvert\Delta C/C\rvert$ ≤ 10% of initial value tan δ ≤ 1.3 times initial specified limit I_{leak} ≤ initial specified limit
Vibration resistance test	To IEC 60068-2-6, test Fc: Frequency range 10 ... 55 Hz, displacement amplitude 0.75 mm, acceleration max. 10 *g*. For 500 V capacitors with l > 144.5 mm: 0.35 mm displacement amplitude, acceleration max. 5 *g*, duration 3 × 2 h. Capacitor mounted by its body which is rigidly clamped to the work surface.	
Characteristics at low temperature	Max. impedance ratio at 100 Hz	

V_R	350 V	≥ 400 V
$Z_{-25°C} / Z_{20°C}$	3	3
$Z_{-40°C} / Z_{20°C}$	10	8

IEC climatic category	To IEC 60068-1: 40/105/56 (–40 °C/+105 °C/56 days damp heat test)
Sectional specification	IEC 60384-4

1) Refer to chapter "General technical information, 5 Useful life" on how to interpret useful life.

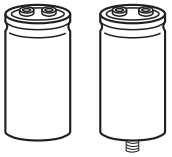

B43743, B43763

Very high ripple current – 105 °C

Ripple current capability

Due to the ripple current capability of the contact elements, the following current upper limits must not be exceeded in case of the absence of any forced cooling around the capacitor and its contact elements:

Capacitor diameter	64.3 mm	76.9 mm	90 mm
$I_{AC,max}$	71 A	100 A	100 A

In the event of the availability of cooling (e.g. forced air around the capacitor body, forced air around the contact elements, capacitor base cooling by a heat sink) however above limits may be exceeded depending on the cooling conditions. For details please contact our sales offices.

Dimensional drawings

B43743
Ring clip/clamp mounting

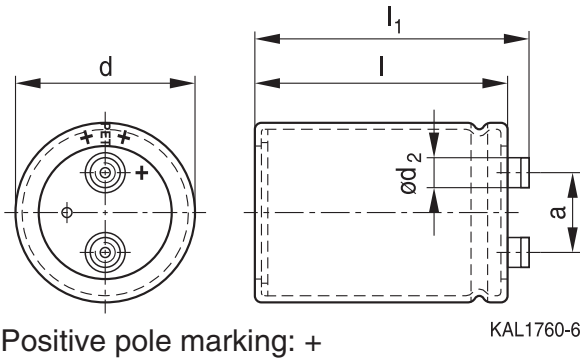

Positive pole marking: +

B43763
Threaded stud mounting

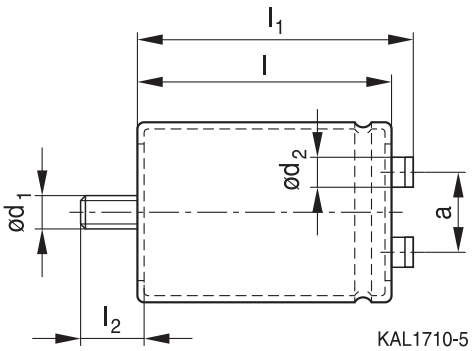

For standard types with threaded stud the base is not insulated. Also refer to the mounting instructions in chapter "Capacitors with screw terminals – accessories" on page 18.

Screw terminals with UNF threads are available upon request.

For information regarding dimensions and weights, packing, special designs and design options, refer to chapter "Capacitors with screw terminals – general information" on page 11.

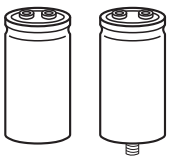

Overview of available types

The capacitance and voltage ratings listed below are available in different case sizes upon request. Other voltage and capacitance ratings are also available upon request.

V_R (V DC)	350	400	450	500
	Case dimensions d × l (mm)			
C_R (µF)				
1000				64.3 × 80.7
1200				64.3 × 96.7
1500			64.3 × 80.7	64.3 × 96.7
1800			64.3 × 96.7	64.3 × 118.2 76.9 × 96.7
2200			64.3 × 105.7	64.3 × 130.7 76.9 × 105.7 90.0 × 97.0
2700	64.3 × 80.7	64.3 × 96.7	64.3 × 118.2 76.9 × 96.7	76.9 × 130.7 90.0 × 120.0
3300	64.3 × 96.7	64.3 × 105.7 76.9 × 96.7	64.3 × 143.2 76.9 × 118.2 90.0 × 97.0	76.9 × 143.2 90.0 × 120.0
3900	64.3 × 105.7	64.3 × 130.7 76.9 × 105.7	76.9 × 130.7 90.0 × 120.0	76.9 × 156.2 90.0 × 144.5
4700	64.3 × 118.2 76.9 × 96.7	64.3 × 143.2 76.9 × 118.2 90.0 × 97.0	76.9 × 143.2 90.0 × 120.0	76.9 × 190.7 90.0 × 144.5
5600	64.3 × 143.2 76.9 × 118.2 90.0 × 97.0	76.9 × 130.7 90.0 × 120.0	76.9 × 168.7 90.0 × 144.5	76.9 × 220.7 90.0 × 170.0
6800	76.9 × 130.7 90.0 × 120.0	76.9 × 156.2 90.0 × 120.0	76.9 × 220.7 90.0 × 170.0	90.0 × 197.0
8200	76.9 × 143.2 90.0 × 120.0	76.9 × 168.7 90.0 × 144.5	90.0 × 197.0	
10000	76.9 × 168.7 90.0 × 144.5	76.9 × 220.7 90.0 × 170.0	90.0 × 221.0	
12000	76.9 × 220.7 90.0 × 170.0	90.0 × 197.0		
15000	90.0 × 197.0	90.0 × 221.0		
18000	90.0 × 221.0			

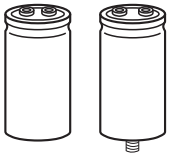

B43743, B43763

Very high ripple current – 105 °C

Technical data and ordering codes

C_R 100 Hz 20 °C µF	Case dimensions d × l mm	ESR_{typ} 100 Hz 20 °C mΩ	ESR_{typ} 300 Hz 60 °C mΩ	Z_{max} 10 kHz 20 °C mΩ	$I_{AC,max}$ 300 Hz 60 °C A	$I_{AC,max}$ 100 Hz 85 °C A	$I_{AC,R}$ 100 Hz 105 °C A	Ordering code (composition see below)
V_R = 350 V DC								
2700	64.3 × 80.7	36	9.7	55	31.8	18.7	12.2	B437*3B4278M6##
3300	64.3 × 96.7	28	8.0	45	36.2	21.4	13.9	B437*3B4338M6##
3900	64.3 × 105.7	24	6.9	38	40.1	23.9	15.5	B437*3A4398M6##
4700	64.3 × 118.2	20	5.8	32	45.2	27.1	17.6	B437*3A4478M6##
4700	76.9 × 96.7	20	5.5	32	50.0	29.3	19.0	B437*3B4478M6##
5600	64.3 × 143.2	17	4.9	28	50.9	30.7	19.9	B437*3A4568M6##
5600	76.9 × 118.2	17	4.6	26	55.6	32.7	21.3	B437*3B4568M6##
5600	90.0 × 97.0	17	4.9	26	56.9	34.1	22.1	B437*3C4568M6##
6800	76.9 × 130.7	14	3.9	22	62.7	37.2	24.2	B437*3A4688M6##
6800	90.0 × 120.0	14	4.0	22	63.8	38.3	25.6	B437*3B4688M6##
8200	76.9 × 143.2	12	3.3	18	70.7	42.2	27.4	B437*3A4828M6##
8200	90.0 × 120.0	12	3.5	19	70.5	42.9	28.6	B437*3B4828M6##
10000	76.9 × 168.7	9.6	2.7	15	80.3	48.4	32.3	B437*3A4109M6##
10000	90.0 × 144.5	9.7	2.9	16	79.3	48.5	32.4	B437*3B4109M6##
12000	76.9 × 220.7	8.0	2.3	13	90.3	54.6	36.5	B437*3A4129M6##
12000	90.0 × 170.0	8.1	2.4	13	88.1	54.3	36.3	B437*3B4129M6##
15000	90.0 × 197.0	6.6	2.0	11	100	62.8	42.0	B437*3A4159M6##
18000	90.0 × 221.0	5.5	1.8	9.4	100	71.1	47.5	B437*3A4189M6##

Composition of ordering code

* = Mounting style
- 4 = for capacitors with ring clip/clamp mounting
- 6 = for capacitors with threaded stud

= Design
- 00 = standard
- 07 = heat sink mounting
- 08 = insulated base
- 50 = PAPR terminal style
- 57 = PAPR with heat sink mounting
- 58 = PAPR with insulated base

For details refer to "Design options" on page 14.

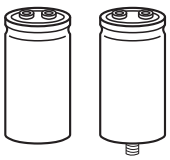

Technical data and ordering codes

C_R 100 Hz 20 °C µF	Case dimensions d × l mm	ESR_{typ} 100 Hz 20 °C mΩ	ESR_{typ} 300 Hz 60 °C mΩ	Z_{max} 10 kHz 20 °C mΩ	$I_{AC,max}$ 300 Hz 60 °C A	$I_{AC,max}$ 100 Hz 85 °C A	$I_{AC,R}$ 100 Hz 105 °C A	Ordering code (composition see below)
V_R = 400 V DC								
2700	64.3 × 96.7	34	9.3	55	33.4	19.5	12.7	B437*3A9278M6##
3300	64.3 × 105.7	28	7.8	45	37.9	22.2	14.4	B437*3A9338M6##
3300	76.9 × 96.7	28	7.3	45	42.0	24.2	15.7	B437*3B9338M6##
3900	64.3 × 130.7	24	6.5	36	42.4	24.9	16.2	B437*3A9398M6##
3900	76.9 × 105.7	24	6.2	36	46.4	26.8	17.4	B437*3B9398M6##
4700	64.3 × 143.2	20	5.6	30	48.0	28.4	18.5	B437*3A9478M6##
4700	76.9 × 118.2	20	5.2	30	52.0	30.2	19.6	B437*3B9478M6##
4700	90.0 × 97.0	20	5.5	30	53.5	31.6	20.5	B437*3C9478M6##
5600	76.9 × 130.7	16	4.5	26	58.0	33.9	22.0	B437*3A9568M6##
5600	90.0 × 120.0	16	4.6	26	59.3	35.0	23.4	B437*3B9568M6##
6800	76.9 × 156.2	14	3.7	22	65.5	38.5	25.0	B437*3A9688M6##
6800	90.0 × 120.0	14	3.9	22	66.0	39.5	26.4	B437*3B9688M6##
8200	76.9 × 168.7	11	3.2	18	74.3	44.0	29.4	B437*3A9828M6##
8200	90.0 × 144.5	11	3.3	18	73.7	44.4	29.7	B437*3B9828M6##
10000	76.9 × 220.7	9.3	2.6	15	84.4	50.3	33.6	B437*3A9109M6##
10000	90.0 × 170.0	9.4	2.8	15	82.9	50.2	33.6	B437*3B9109M6##
12000	90.0 × 197.0	7.8	2.4	13	92.4	56.5	37.8	B437*3A9129M6##
15000	90.0 × 221.0	6.4	2.0	11	100	65.9	44.1	B437*3A9159M6##

Composition of ordering code

* = Mounting style
- 4 = for capacitors with ring clip/clamp mounting
- 6 = for capacitors with threaded stud

= Design
- 00 = standard
- 07 = heat sink mounting
- 08 = insulated base
- 50 = PAPR terminal style
- 57 = PAPR with heat sink mounting
- 58 = PAPR with insulated base

For details refer to "Design options" on page 14.

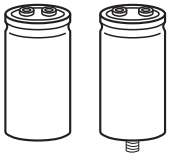

B43743, B43763

Very high ripple current – 105 °C

Technical data and ordering codes

C_R 100 Hz 20 °C µF	Case dimensions d × l mm	ESR_{typ} 100 Hz 20 °C mΩ	ESR_{typ} 300 Hz 60 °C mΩ	Z_{max} 10 kHz 20 °C mΩ	$I_{AC,max}$ 300 Hz 60 °C A	$I_{AC,max}$ 100 Hz 85 °C A	$I_{AC,R}$ 100 Hz 105 °C A	Ordering code (composition see below)
V_R = 450 V DC								
1500	64.3 × 80.7	60	16	90	24.9	13.9	9.09	B437*3B5158M6##
1800	64.3 × 96.7	50	14	75	28.0	15.7	10.2	B437*3B5188M6##
2200	64.3 × 105.7	40	11	60	31.8	17.9	11.6	B437*3A5228M6##
2700	64.3 × 118.2	32	9.4	50	36.3	20.6	13.4	B437*3A5278M6##
2700	76.9 × 96.7	32	9.1	50	39.7	22.2	14.4	B437*3B5278M6##
3300	64.3 × 143.2	28	7.8	40	41.6	23.7	15.4	B437*3A5338M6##
3300	76.9 × 118.2	26	7.5	40	44.8	25.1	16.3	B437*3B5338M6##
3300	90.0 × 97.0	28	7.7	40	46.6	26.5	17.2	B437*3C5338M6##
3900	76.9 × 130.7	22	6.4	34	49.8	28.0	18.2	B437*3A5398M6##
3900	90.0 × 120.0	22	6.5	34	51.2	29.1	19.5	B437*3B5398M6##
4700	76.9 × 143.2	19	5.4	28	56.3	31.9	20.7	B437*3A5478M6##
4700	90.0 × 120.0	19	5.6	30	57.2	32.8	21.9	B437*3B5478M6##
5600	76.9 × 168.7	16	4.6	24	63.2	35.9	24.0	B437*3A5568M6##
5600	90.0 × 144.5	16	4.7	24	63.4	36.5	24.4	B437*3B5568M6##
6800	76.9 × 220.7	13	3.8	20	71.4	40.9	27.4	B437*3A5688M6##
6800	90.0 × 170.0	13	3.9	20	71.1	41.2	27.5	B437*3B5688M6##
8200	90.0 × 197.0	11	3.3	17	79.7	46.5	31.1	B437*3A5828M6##
10000	90.0 × 221.0	9.1	2.8	14	90.4	53.3	35.7	B437*3A5109M6##

Composition of ordering code

* = Mounting style
- 4 = for capacitors with ring clip/clamp mounting
- 6 = for capacitors with threaded stud

= Design
- 00 = standard
- 07 = heat sink mounting
- 08 = insulated base
- 50 = PAPR terminal style
- 57 = PAPR with heat sink mounting
- 58 = PAPR with insulated base

For details refer to "Design options" on page 14.

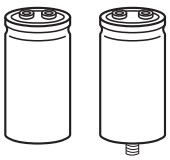

Technical data and ordering codes

C_R 100 Hz 20 °C µF	Case dimensions d × l mm	ESR_{typ} 100 Hz 20 °C mΩ	ESR_{typ} 300 Hz 60 °C mΩ	Z_{max} 10 kHz 20 °C mΩ	$I_{AC,max}$ 300 Hz 60 °C A	$I_{AC,max}$ 100 Hz 85 °C A	$I_{AC,R}$ 100 Hz 105 °C A	Ordering code (composition see below)
V_R = 500 V DC								
1000	64.3 × 80.7	75	22	110	21.2	10.9	7.59	B437*3A6108M6##
1200	64.3 × 96.7	65	18	90	23.7	12.9	8.52	B437*3A6128M6##
1500	64.3 × 96.7	50	15	70	27.5	15.0	9.90	B437*3A6158M6##
1800	64.3 × 118.2	40	12	60	30.9	17.0	11.1	B437*3A6188M6##
1800	76.9 × 96.7	40	12	60	33.6	18.3	12.0	B437*3B6188M6##
2200	64.3 × 130.7	34	10	50	35.5	19.6	12.9	B437*3A6228M6##
2200	76.9 × 105.7	34	9.9	50	38.2	20.8	13.7	B437*3B6228M6##
2200	90.0 × 97.0	34	10	50	39.9	21.9	14.3	B437*3C6228M6##
2700	76.9 × 130.7	28	8.1	38	43.3	23.6	15.5	B437*3A6278M6##
2700	90.0 × 120.0	28	8.1	40	44.7	24.6	16.7	B437*3B6278M6##
3300	76.9 × 143.2	22	6.7	32	49.5	27.1	17.8	B437*3A6338M6##
3300	90.0 × 120.0	24	6.8	32	50.7	28.1	19.1	B437*3B6338M6##
3900	76.9 × 156.2	19	5.7	28	55.6	30.7	20.1	B437*3A6398M6##
3900	90.0 × 144.5	20	5.8	28	55.8	31.0	21.0	B437*3B6398M6##
4700	76.9 × 190.7	16	4.8	24	63.0	34.9	23.6	B437*3A6478M6##
4700	90.0 × 144.5	16	4.9	24	63.2	35.5	24.0	B437*3B6478M6##
5600	76.9 × 220.7	14	4.0	19	71.2	39.7	26.9	B437*3A6568M6##
5600	90.0 × 170.0	14	4.2	19	70.3	39.6	26.9	B437*3B6568M6##
6800	90.0 × 197.0	11	3.5	16	79.7	45.3	30.7	B437*3A6688M6##

Composition of ordering code

* = Mounting style
- 4 = for capacitors with ring clip/clamp mounting
- 6 = for capacitors with threaded stud

= Design
- 00 = standard
- 07 = heat sink mounting
- 08 = insulated base
- 50 = PAPR terminal style
- 57 = PAPR with heat sink mounting
- 58 = PAPR with insulated base

For details refer to "Design options" on page 14.

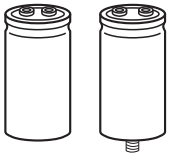

Useful life[1)]

For useful life calculations, please use our web-based "AlCap Useful Life Calculation Tool", which can be found on the Internet under the following link:
www.tdk-electronics.tdk.com/alcap
The AlCap Useful Life Calculation Tool provides calculations of useful life as well as additional data for selected capacitor types under operating conditions defined by the user.

In addition, it is possible to calculate useful life expectancies based on temperatures measured by the user in the application.

Frequency characteristics of ESR
Typical behavior

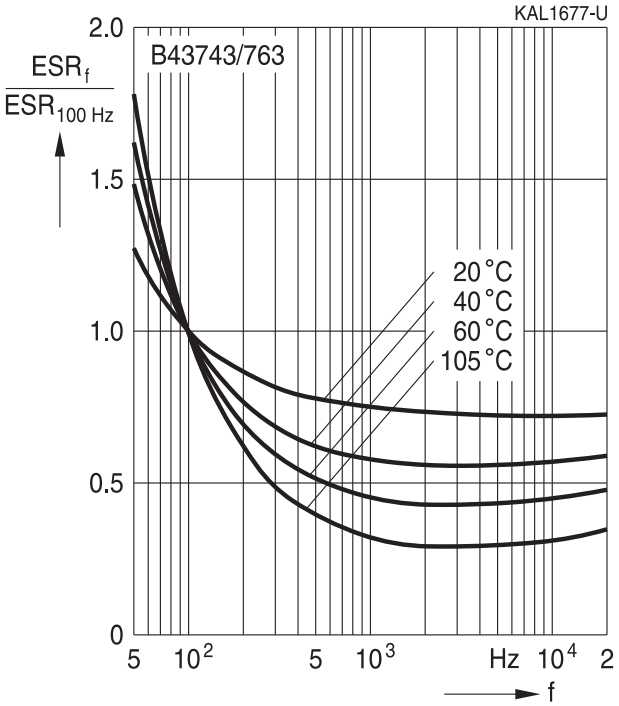

Impedance Z versus frequency f
Typical behavior at 20 °C

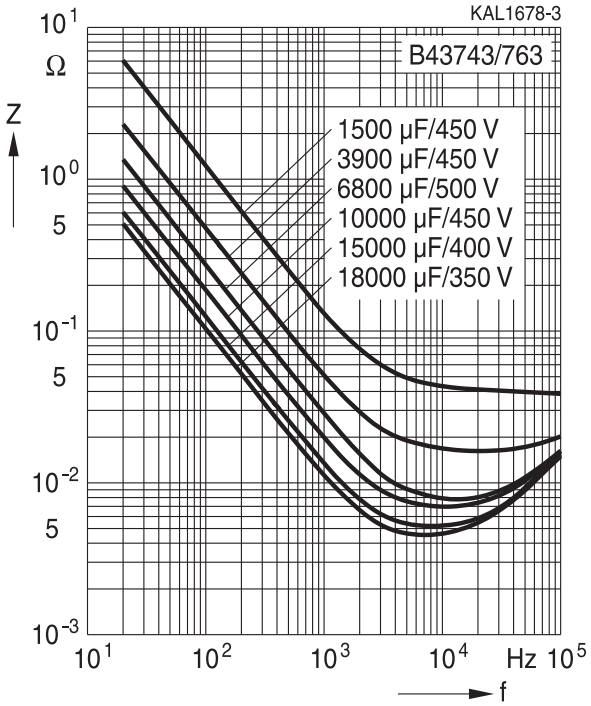

1) Refer to chapter "General technical information, 5 Useful life" on how to interpret useful life.

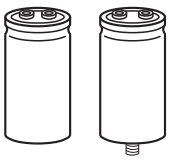

Capacitors with screw terminals – general information

1 Dimensional drawings

Ring clip/clamp mounting

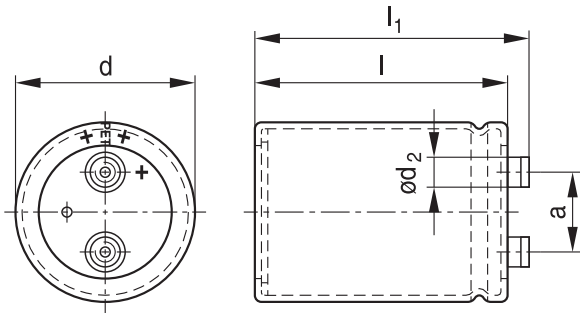

Threaded stud mounting

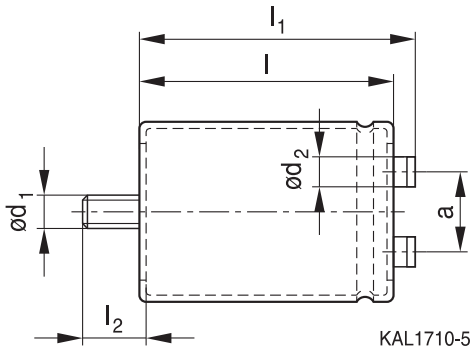

Positive pole marking: +

For standard types with threaded stud the base is not insulated. Also refer to the mounting instructions in chapter "Capacitors with screw terminals – accessories" on page 18.
Screw terminals with UNF threads are available upon request.

2 Dimensions and weights (Standard capacitors, without heat sink, M600)

2.1 Capacitors with screw terminals series B43701, B43721

Terminal	Dimensions (mm) with insulating sleeve							Approx. weight (g)
	d	l ±1	l_1 ±1	l_2 +0/−1	d_1	d_2 max.	a +0.2/−0.4	
M5	51.6 +0.5/−1	80.7	87.2	17	M12	10.2	22.2	220
M5	51.6 +0.5/−1	96.7	103.2	17	M12	10.2	22.2	250
M5	51.6 +0.5/−1	105.7	112.2	17	M12	10.2	22.2	280
M5	51.6 +0.5/−1	118.2	124.7	17	M12	10.2	22.2	320
M5	51.6 +0.5/−1	130.7	137.2	17	M12	10.2	22.2	350
M5	64.3 +0.5/−1	80.7	87.2	17	M12	13.2	28.5	370
M5	64.3 +0.5/−1	96.7	103.2	17	M12	13.2	28.5	400
M5	64.3 +0.5/−1	105.7	112.2	17	M12	13.2	28.5	440
M5	64.3 +0.5/−1	118.2	124.7	17	M12	13.2	28.5	510
M5	64.3 +0.5/−1	130.7	137.2	17	M12	13.2	28.5	600
M5	64.3 +0.5/−1	143.2	149.7	17	M12	13.2	28.5	630
M5	76.9 +0.5/−1	96.7	103.2	17	M12	13.2	31.7	570
M5	76.9 +0.5/−1	105.7	112.2	17	M12	13.2	31.7	620
M5	76.9 +0.5/−1	130.7	137.2	17	M12	13.2	31.7	800
M5	76.9 +0.5/−1	156.2	162.7	17	M12	13.2	31.7	920
M5	76.9 +0.5/−1	168.7	175.2	17	M12	13.2	31.7	1000
M5	76.9 +0.5/−1	190.7	197.2	17	M12	13.2	31.7	1150

Min. reach of screw = 9.5 mm

Tolerances of terminal thread respectively stud thread:
– Terminal thread M5: 6H
– Stud thread M12: 6g

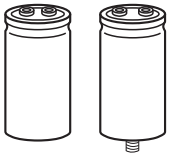

2.2 Capacitors with screw terminals series

Terminal	Dimensions (mm) with insulating sleeve							Approx.
	d	l ±1	l_1 ±1	l_2 +0/−1	d_1	d_2 max.	a +0.2/−0.4	weight (g)
M5	51.6 +0.5/−1	80.7	87.2	17	M12	10.2	22.2	220
M5	51.6 +0.5/−1	96.7	103.2	17	M12	10.2	22.2	250
M5	51.6 +0.5/−1	105.7	112.2	17	M12	10.2	22.2	280
M5	51.6 +0.5/−1	118.2	124.7	17	M12	10.2	22.2	320
M5	51.6 +0.5/−1	130.7	137.2	17	M12	10.2	22.2	350
M5	64.3 +0.5/−1	80.7	87.2	17	M12	13.2	28.5	370
M5	64.3 +0.5/−1	96.7	103.2	17	M12	13.2	28.5	400
M5	64.3 +0.5/−1	105.7	112.2	17	M12	13.2	28.5	440
M5	64.3 +0.5/−1	118.2	124.7	17	M12	13.2	28.5	510
M5	64.3 +0.5/−1	130.7	137.2	17	M12	13.2	28.5	600
M5	64.3 +0.5/−1	143.2	149.7	17	M12	13.2	28.5	630
M6	76.9 +0.5/−1	96.7	102.5	17	M12	17.7	31.7	570
M6	76.9 +0.5/−1	105.7	111.5	17	M12	17.7	31.7	620
M6	76.9 +0.5/−1	118.2	124.0	17	M12	17.7	31.7	700
M6	76.9 +0.5/−1	130.7	136.5	17	M12	17.7	31.7	800
M6	76.9 +0.5/−1	143.2	149.0	17	M12	17.7	31.7	840
M6	76.9 +0.5/−1	156.2	162.0	17	M12	17.7	31.7	920
M6	76.9 +0.5/−1	168.7	174.5	17	M12	17.7	31.7	1000
M6	76.9 +0.5/−1	190.7	196.5	17	M12	17.7	31.7	1150
M6	76.9 +0.5/−1	220.7	226.5	17	M12	17.7	31.7	1300
M6	90.0 +0.5/−1.5	97.0	102.3	17	M12	17.7	31.7	770
M6	90.0 +0.5/−1.5	120.0	125.3	17	M12	17.7	31.7	1000
M6	90.0 +0.5/−1.5	144.5	149.8	17	M12	17.7	31.7	1200
M6	90.0 +0.5/−1.5	170.0	175.3	17	M12	17.7	31.7	1400
M6	90.0 +0.5/−1.5	191.0	196.3	17	M12	17.7	31.7	1650
M6	90.0 +0.5/−1.5	197.0	202.3	17	M12	17.7	31.7	1700
M6	90.0 +0.5/−1.5	221.0	226.3	17	M12	17.7	31.7	1900

For low-inductance design the following deviation applies:
d = 64.3 mm: l_1 −0.7 mm
d = 90.0 mm: l_1 −1.7 mm

M5: Min. reach of screw = 9.5 mm
9 mm for low inductance design
M6: Min. reach of screw = 12.0 mm
9.5 mm for low inductance design

Tolerances of terminal thread respectively stud thread:
– Terminal thread M5 and M6: 6H
– Stud thread M12: 6g

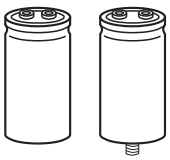

3 Accessories

All accessories for connecting (screws M5 and M6) as well as for mounting the capacitors must be ordered separately. For details refer to chapter "Capacitors with screw terminals – accessories" on page 18.

Item	Type
Screws M5 and M6	B44020
Ring clips	B44030
Clamps for capacitors with d ≥ 64.3 mm	B44030
Insulating parts	B44020

4 Packing

Capacitor diameter d (mm)	Length l (mm)	Packing units (pcs.)
51.6	all	36
64.3	all	25
76.9	≤168.7 >168.7	16 12
90.0	all	9

For ecological reasons the packing is pure cardboard.

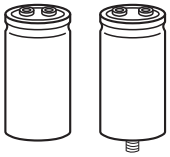

5 Special designs

5.1 Design options

Design options	Identification in third block of ordering code	Remark
Standard	M600	Standard version without threaded stud: fully insulated with PET Standard version with threaded stud: insulated with PET sleeve, base not insulated
Low inductance (13 nH)	M603	For capacitors with diameter d ≥ 64.3 mm
Heat sink mounting	M607	For capacitors with diameter d ≥ 64.3 mm and without threaded stud
Insulated base	M608	For capacitors with threaded stud, fully insulated with PET sleeve and PP disk
PAPR terminal style	M650	Not for low inductance
PAPR with heat sink mounting	M657	For capacitors with diameter d ≥ 64.3 mm and without threaded stud, not for low inductance
PAPR with insulated base	M658	For capacitors with threaded stud, fully insulated with PET sleeve and PP disk, not for low inductance

Version with low inductance (13 nH) in combination with insulated base (threaded stud) available upon request.

Please note that there are design options which might not be available for each series. For further information refer to series data sheets.

5.2 **Low-inductance design** (M603)

Low-inductance aluminum electrolytic capacitors offer numerous advantages for frequency converter design:

- Voltage peaks caused by steep-edged pulses are significantly reduced.
- Power semiconductors of a lower voltage class can be used.
- Capacitor banks require fewer capacitors, which reduces the cost, weight and space requirements of frequency converters accordingly.

The low inductance of the aluminum electrolytic capacitor with screw terminals is the result of various design improvements.

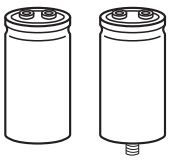

Many of the data book types with diameter ≥ 64.3 mm can be ordered in low-inductance design with inductance approx. L = 13 nH.

For low-inductance design the following deviation regarding case dimensions applies:
d = 64.3 mm: l_1 −0.7 mm
d = 90.0 mm: l_1 −1.7 mm
M5: Min. reach of screw = 9.0 mm
M6: Min. reach of screw = 9.5 mm

5.3 Capacitors with heat sink mounting (M607, M657)

As a large amount of heat is dissipated through the base of the case, the use of a heat sink connected to the capacitor base is the most efficient cooling method. For heat-sink mounting we offer a special optimized version of high-voltage capacitors with screw terminals in order to ensure an optimal heat transfer between the base of the case and the heat sink. The special design comprises:

- Two thermal pads at the base. The first one (thickness 0.5 mm) closes the air gap at the base in the area which is not covered by the insulating sleeve and the second one (thickness 0.2 mm) ensures the electrical insulation of the case.
- Minimized tolerance (±0.35 mm) of the overall length l_1 of the capacitor to avoid unwanted mechanical forces on the terminals particularly when several capacitors are mounted between heat sink and bus bar.
- Case with extra groove near the base for ring clamp mounting (recommended accessory B44030A0165-A0190B). The clamp ensures an optimal pressing of the case to the heat sink.
- Most of the high-voltage data book types without threaded stud and for diameters ≥ 64.3 mm can be ordered in heat-sink mounting design.

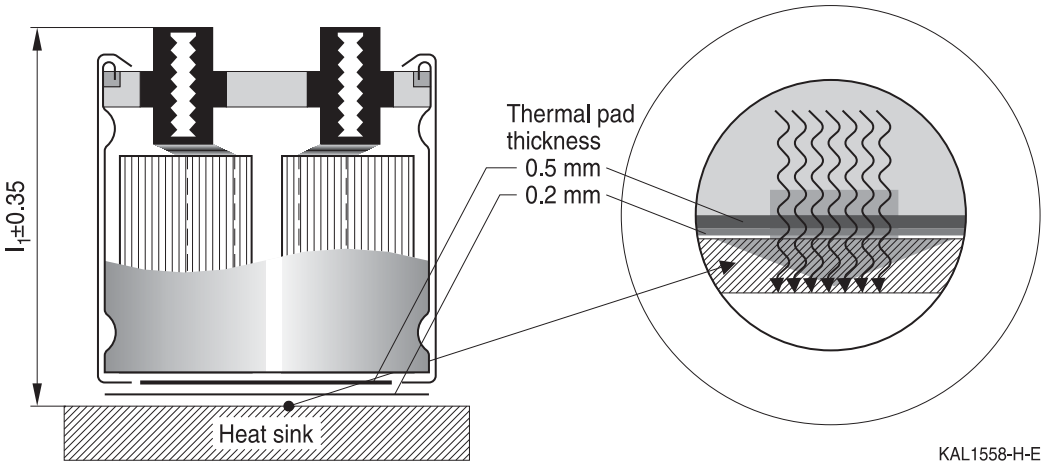

Please refer to chapter "General technical information, 5.2.2 Base cooling with heat sink". Regarding ripple current and useful life, please refer to chapter "General technical information, 5 Useful life".

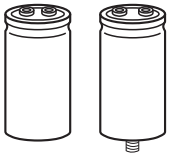

Dimensions and weights for heat sink mounting:

Terminal	Dimensions (mm) with insulating sleeve					Approx. weight
	d	l ±1	l_1 ±0.35	d_2 max.	a +0.2/−0.4	g
M5	64.3 +0.5/−1	80.7	86.3	13.2	28.5	370
M5	64.3 +0.5/−1	96.7	102.3	13.2	28.5	400
M5	64.3 +0.5/−1	105.7	111.3	13.2	28.5	440
M6	76.9 +0.5/−1	96.7	101.6	17.7	31.7	570
M6	76.9 +0.5/−1	105.7	110.6	17.7	31.7	620
M6	76.9 +0.5/−1	118.2	123.1	17.7	31.7	700
M6	90.0 +0.5/−1.5	97.0	101.4	17.7	31.7	770
M6	90.0 +0.5/−1.5	120.0	124.4	17.7	31.7	1000
M6	90.0 +0.5/−1.5	144.5	148.9	17.7	31.7	1200

M5: Min. reach of screw = 7.5 mm
M6: Min. reach of screw = 10.0 mm
Tolerances of terminal thread M5 and M6: 6H
Dimensions for other sizes are available upon request.

5.4 **Insulated base** (M608, M658)

Length l and l_1 increase by +0.5 mm for types with threaded stud and insulated base. All other dimensions of the capacitor are identical with those of standard capacitors. Please refer to the table "Dimensions and weights".

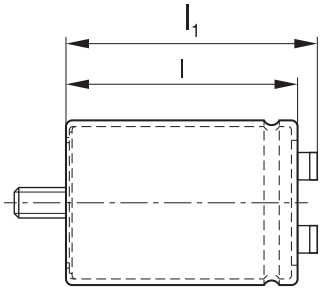

KAL1711-D

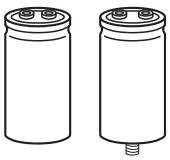

5.5 PAPR terminal style (M650, M657, M658)

An aluminum electrolytic capacitor is a polar component that needs strictly to be mounted under correct polarity. With our PAPR terminal style (**P**rotection **A**gainst **P**olarity **R**eversal) we offer an optional mechanical feature in addition to the visual polarity marking on the cover disk and the sleeve, which prevents from mounting in reverse polarity.

The non-circular shape of the terminals and their arrangement perpendicular to each other enables the user to definitely prevent wrong mounting with respect to polarity (Poka Yoke).

Dimensional drawing of PAPR terminal configuration:

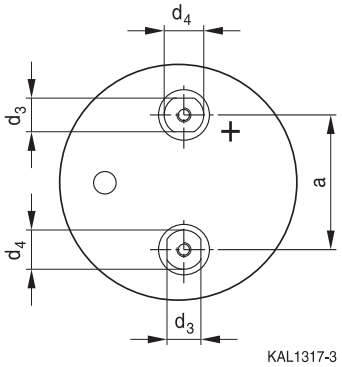

Dimensions for PAPR terminal style (mm):

Capacitor diameter d	Terminal	d_3 ±0.1	d_4 ±0.1	a +0.2/−0.4
51.6	M5	10	13	22.2
64.3	M5	13	15	28.5
76.9	M6	13	15	31.7
90.0	M6	13	15	31.7

M5: Min. reach of screw = 9.5 mm
M6: Min. reach of screw = 12.0 mm

Tolerances of terminal thread M5 and M6: 6H

All other dimensions of the capacitor such as diameter d, case length l and overall length l_1 are identical with those of standard capacitors of this series. Please refer to the tables "Dimensions and weights" (standard types) on page 12 and "Dimensions and weights for heat sink mounting" (special designs) on page 16.

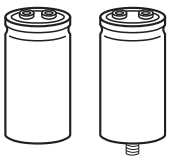

B43743, B43763

Very high ripple current – 105 °C

Capacitors with screw terminals – accessories

Basic accessories

One packing unit contains accessories for 16 capacitors.

For terminals

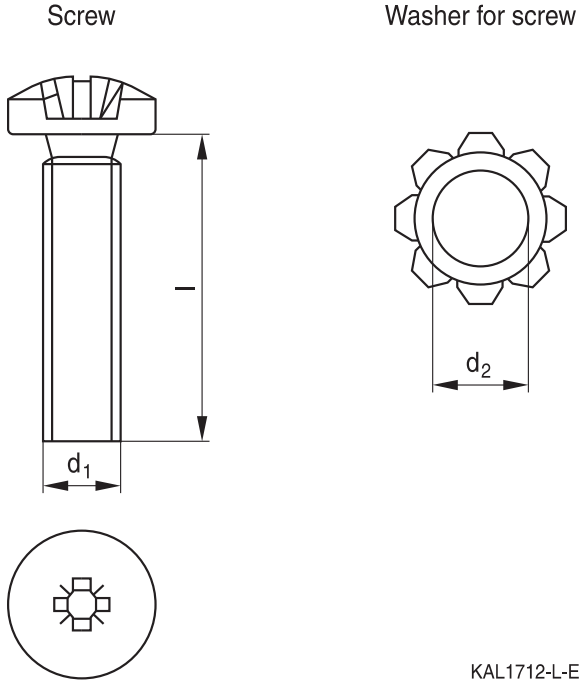

Thread d1	d2 mm	Toothed washers	Screws	Maximum torque	Ordering code
M5	5.3	A 5.1 DIN 6797	DIN 7985 / ISO 7045-M5 x 10-5.6-Z l = 10 mm	2.5 Nm thread depth t ≥ 8 mm	B44020J0500B000
M6	6.4	A 6.4 DIN 6797	DIN 7985 / ISO 7045-M6 x 12-5.6-Z l = 12 mm	4.0 Nm thread depth t ≥ 9.5 mm	B44020J0600B000

For threaded stud

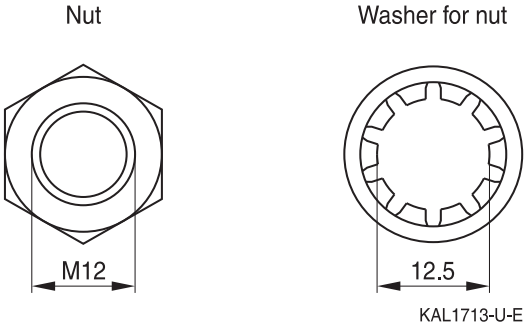

Thread	For terminal	Toothed washers	Nuts	Maximum torque	Ordering code
M12	M5	J 12.5 DIN 6797	Hex nut BM 12 DIN 439	10 Nm	B44020J0500B012
M12	M6	J 12.5 DIN 6797	Hex nut BM 12 DIN 439	10 Nm	B44020J0600B012

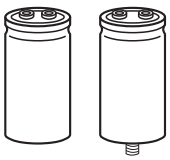

Additional accessories for capacitors with mounting stud on capacitor base

Insulating washer made of hostalen

Capacitor diameter	Thread size	Dimensional drawing	Diameter d mm	Ordering code
51.6 mm	M12	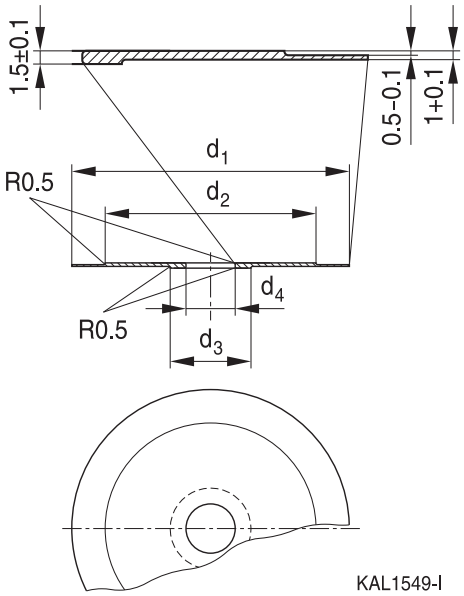	d_1 –0.5 = 51 d_2 –0.5 = 31 d_3 ±0.3 = 21.5 d_4 ±0.2 = 13	B44020B0006B051
64.2 mm	M12		d_1 –0.5 = 63.5 d_2 –0.5 = 43.5 d_3 ±0.3 = 21.5 d_4 ±0.2 = 13	B44020B0006B064
76.9 mm	M12		d_1 –0.5 = 76 d_2 –0.5 = 56 d_3 ±0.3 = 21.5 d_4 ±0.2 = 13	B44020B0006B076
90.0 mm	M12		d_1 –0.5 = 89 d_2 –0.5 = 69 d_3 ±0.3 = 21.5 d_4 ±0.2 = 13	B44020B0006B090

Only for capacitors with threaded stud and without insulated base

Reinforced nylon cap nut

Capacitor diameter	Thread size	Dimensional drawing	Ordering code
> 40 mm	M12[1)] width across flats 19 mm	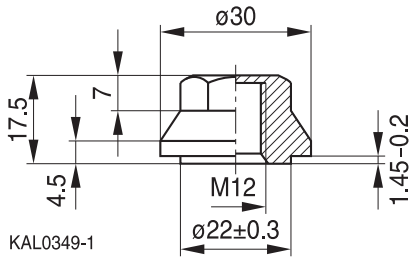	B44020J0006B012
		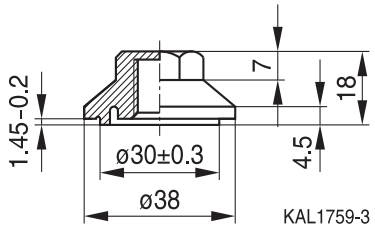	B44020J0007B012

1) Maximum torque M12: 7.0 Nm for mounting thread length ≥ 13 mm; 5.0 Nm for mounting thread length ≥ 10 mm

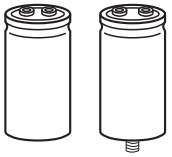

Mounting instructions

Insulated mounting with washer and cap nut (for capacitors with threaded stud and without insulated base):

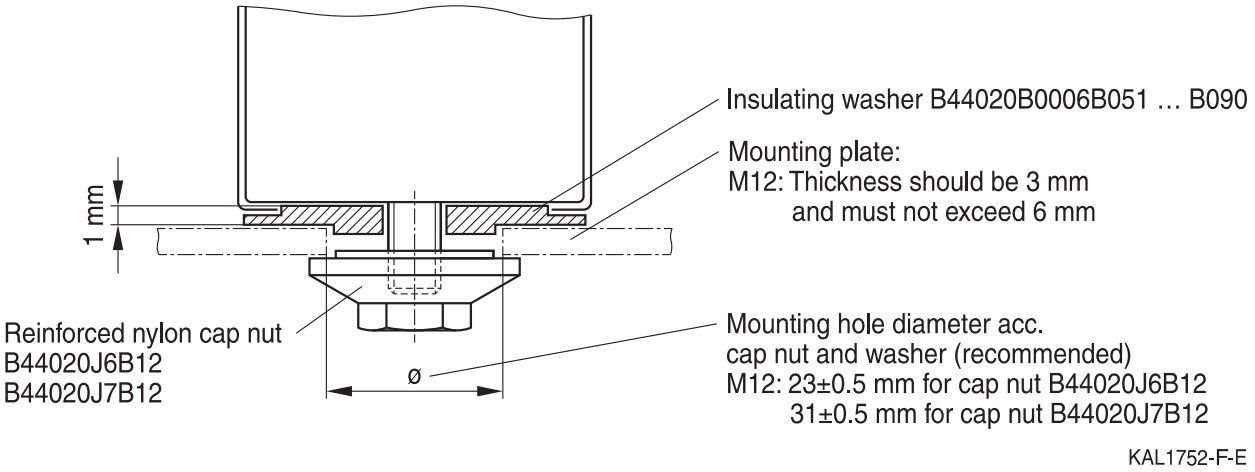

Mounting stud has the same potential as the negative terminal.
Attention must be paid on any relevant regulations (e.g. VDE, BSA or UL).

Ring clip mounting

Ring clips are primarily used for upright mounting of screw terminal and photoflash capacitors. The ring clips are corrosion protected and are RoHS-compatible.

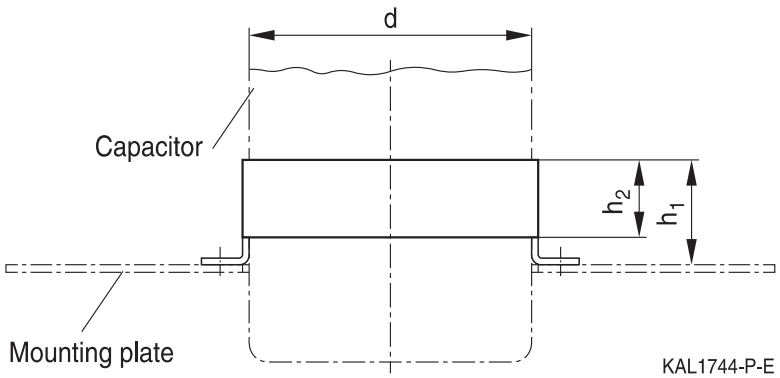

It is recommended to insert an additional insulating strip between capacitor and ring clip to avoid any risk of damage due to edges from the clip. The strip is included in delivery. For ordering code, see the following table. Attention must be paid to any relevant regulations (e.g. VDE, BSA or UL).

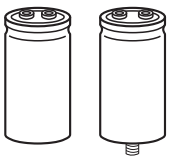

d	h_1 mm	h_2	Ring clip version	Ordering code with insulating strip
51.6	22	15	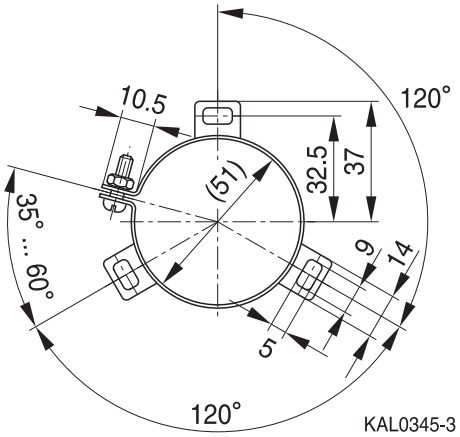	B44030J0051B000 (insulating strip length: 325 mm)
64.3	29	19	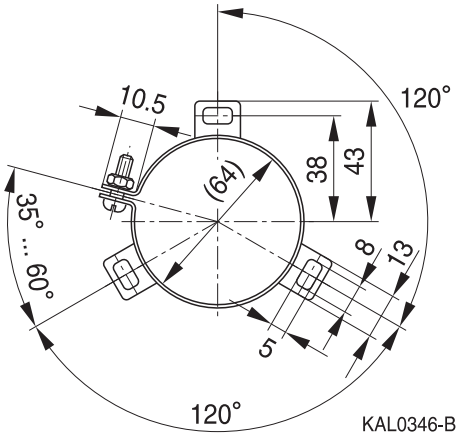	B44030J0064B000 (insulating strip length: 420 mm)
76.9	29	19	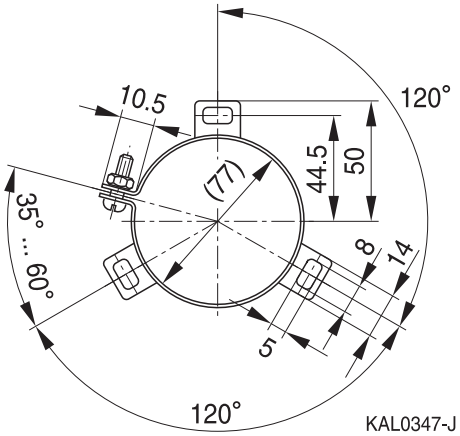	B44030J0075B000 (insulating strip length: 495 mm)

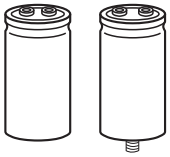

B43743, B43763

Very high ripple current – 105 °C

d	h_1 mm	h_2	Ring clip version	Ordering code with insulating strip
90.0	29	19	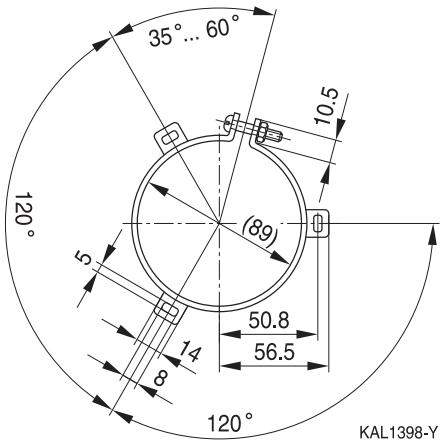	B44030J0090B000 (insulating strip length: 585 mm)

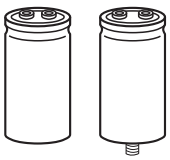

Clamp mounting

Screw terminal capacitors without threaded stud and with a diameter ≥ 64.3 mm can also be mounted with ring clamps. Clamp mounting offers the following advantages:

- Optimum heat transfer between capacitor base and board due to pressure contact
- High vibration resistance
- Electrically insulated material

Dimensional drawing

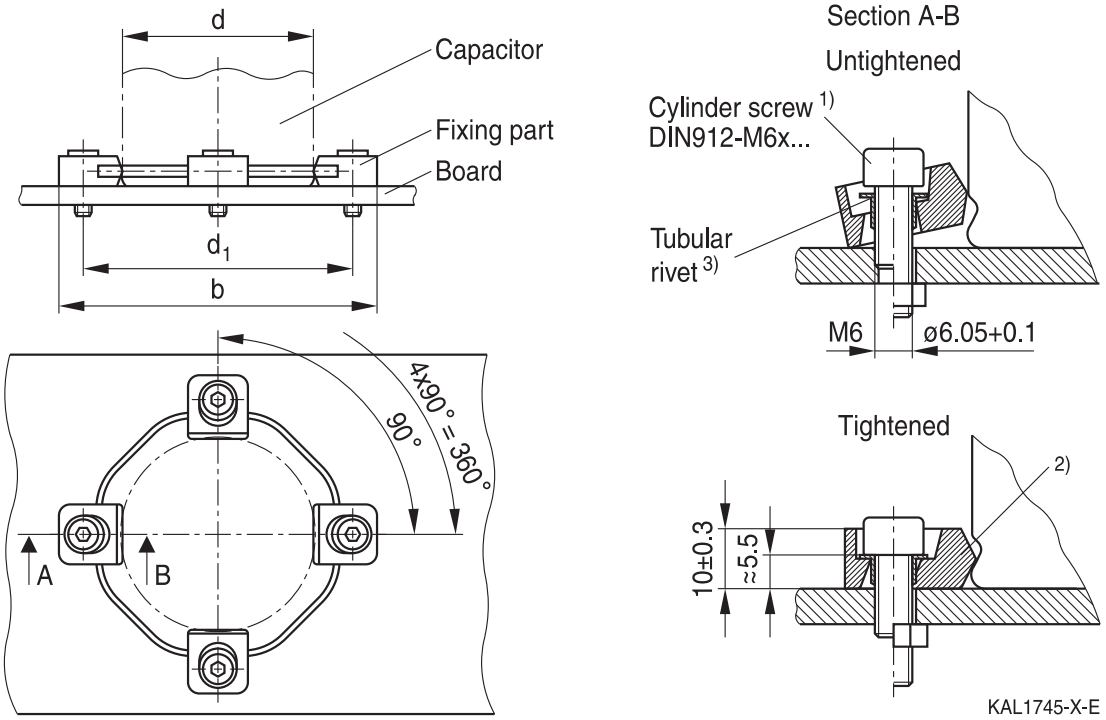

1) Length of screw depends on application.

2) The screws have to be tightened uniformly and crosswise until the fixing part rests flatly on the board.

3) Tubular rivets included in delivery package.

General hints for mounting: If required, the four fixation parts can be cut out from the common carrier ring and mounted separately.

Dimensions and ordering codes

Capacitor diameter d mm	d_1 ±0.2 mm	b mm	Ordering code
64.3	87.0	104.0	B44030A0165B000
76.9	99.0	116.0	B44030A0175B000
90.0	112.0	130.0	B44030A0190B000

Screws are not included in the delivery package.

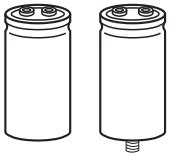

B43743, B43763

Very high ripple current – 105 °C

Mounting set (ring clamps)

- Protects the capacitor against tilt and the terminals from mechanical stress
- Fits for different capacitor length
- Electrically insulated clamping material

Dimensions and ordering codes

Capacitor diameter d	$\varnothing_{min}$	Ordering code
76.9 mm	84 mm	B44030A0375B000
90.0 mm	96.5 mm	B44030A0390B000

Dimensional drawing

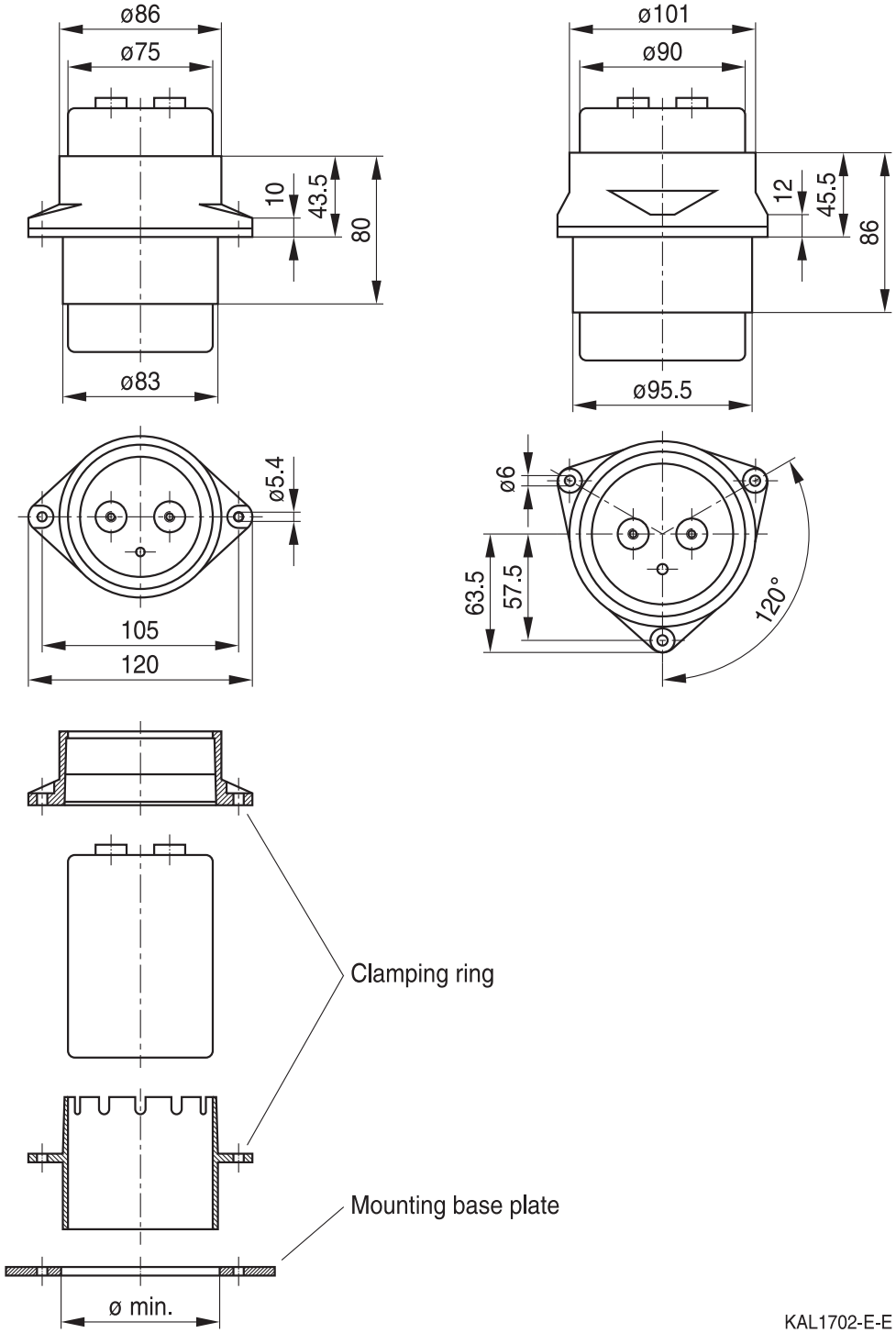

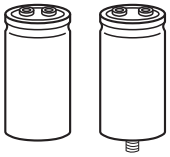

Cautions and warnings

Personal safety

The electrolytes used have been optimized both with a view to the intended application and with regard to health and environmental compatibility. They do not contain any solvents that are detrimental to health, e.g. dimethyl formamide (DMF) or dimethyl acetamide (DMAC). Furthermore, some of the high-voltage electrolytes used are self-extinguishing.

As far as possible, we do not use any dangerous chemicals or compounds to produce operating electrolytes, although in exceptional cases, such materials must be used in order to achieve specific physical and electrical properties because no alternative materials are currently known. We do, however, restrict the amount of dangerous materials used in our products to an absolute minimum.

Materials and chemicals used in our aluminum electrolytic capacitors are continuously adapted in compliance with the TDK Electronics Corporate Environmental Policy and the latest EU regulations and guidelines such as RoHS, REACH/SVHC, GADSL, and ELV.

MDS (Material Data Sheets) are available on our website for all types listed in the data book.
MDS for customer specific capacitors are available upon request.
MSDS (Material Safety Data Sheets) are available for our electrolytes upon request.

Nevertheless, the following rules should be observed when handling aluminum electrolytic capacitors: No electrolyte should come into contact with eyes or skin. If electrolyte does come into contact with the skin, wash the affected areas immediately with running water. If the eyes are affected, rinse them for 10 minutes with plenty of water. If symptoms persist, seek medical treatment. Avoid inhaling electrolyte vapor or mists. Workplaces and other affected areas should be well ventilated. Clothing that has been contaminated by electrolyte must be changed and rinsed in water.

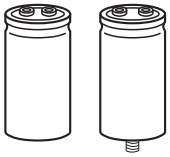

Product safety

The table below summarizes the safety instructions that must be observed without fail. A detailed description can be found in the relevant sections of seperate file chapter "General technical information".

Topic	Safety information	Reference chapter "General technical information"
Polarity	Make sure that polar capacitors are connected with the right polarity.	1 "Basic construction of aluminum electrolytic capacitors"
Reverse voltage	Voltages of opposite polarity should be prevented by connecting a diode.	3.1.6 "Reverse voltage"
Mounting position of screw-terminal capacitors	Screw terminal capacitors must not be mounted with terminals facing down unless otherwise specified.	11.1. "Mounting positions of capacitors with screw terminals"
Robustness of terminals	The following maximum tightening torques must not be exceeded when connecting screw terminals: M5: 2.5 Nm M6: 4.0 Nm	11.3 "Mounting torques"
Mounting of single-ended capacitors	The internal structure of single-ended capacitors might be damaged if excessive force is applied to the lead wires. Avoid any compressive, tensile or flexural stress. Do not move the capacitor after soldering to PC board. Do not pick up the PC board by the soldered capacitor. Do not insert the capacitor on the PC board with a hole space different to the lead space specified.	11.4 "Mounting considerations for single-ended capacitors"
Soldering	Do not exceed the specified time or temperature limits during soldering.	11.5 "Soldering"
Soldering, cleaning agents	Do not allow halogenated hydrocarbons to come into contact with aluminum electrolytic capacitors.	11.6 "Cleaning agents"
Upper category temperature	Do not exceed the upper category temperature.	7.2 "Maximum permissible operating temperature"
Passive flammability	Avoid external energy, e.g. fire.	8.1 "Passive flammability"

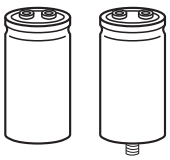

Topic	Safety information	Reference chapter "General technical information"
Active flammability	Avoid overload of the capacitors.	8.2 "Active flammability"
Maintenance	Make periodic inspections of the capacitors. Before the inspection, make sure that the power supply is turned off and carefully discharge the capacitors. Do not apply excessive mechanical stress to the capacitor terminals when mounting.	10 "Maintenance"
Storage	Do not store capacitors at high temperatures or high humidity. Capacitors should be stored at +5 to +35 °C and a relative humidity of ≤ 75%.	7.3 "Shelf life and storage conditions"
		Reference chapter "Capacitors with screw terminals"
Breakdown strength of insulating sleeves	Do not damage the insulating sleeve, especially when ring clips are used for mounting.	"Screw terminals – accessories"

Display of ordering codes for TDK Electronics products

The ordering code for one and the same product can be represented differently in data sheets, data books, other publications, on the company website, or in order-related documents such as shipping notes, order confirmations and product labels. The varying representations of the ordering codes are due to different processes employed and do not affect the specifications of the respective products.
Detailed information can be found on the Internet under
www.tdk-electronics.tdk.com/orderingcodes.

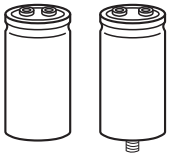

Symbols and terms

Symbol	English	German
C	Capacitance	Kapazität
C_R	Rated capacitance	Nennkapazität
C_S	Series capacitance	Serienkapazität
$C_{S,T}$	Series capacitance at temperature T	Serienkapazität bei Temperatur T
C_f	Capacitance at frequency f	Kapazität bei Frequenz f
d	Case diameter, nominal dimension	Gehäusedurchmesser, Nennmaß
d_{max}	Maximum case diameter	Maximaler Gehäusedurchmesser
ESL	Self-inductance	Eigeninduktivität
ESR	Equivalent series resistance	Ersatzserienwiderstand
ESR_f	Equivalent series resistance at frequency f	Ersatzserienwiderstand bei Frequenz f
ESR_T	Equivalent series resistance at temperature T	Ersatzserienwiderstand bei Temperatur T
f	Frequency	Frequenz
I	Current	Strom
I_{AC}	Alternating current (ripple current)	Wechselstrom
$I_{AC,RMS}$	Root-mean-square value of alternating current	Wechselstrom, Effektivwert
$I_{AC,f}$	Ripple current at frequency f	Wechselstrom bei Frequenz f
$I_{AC,max}$	Maximum permissible ripple current	Maximal zulässiger Wechselstrom
$I_{AC,R}$	Rated ripple current	Nennwechselstrom
I_{leak}	Leakage current	Reststrom
$I_{leak,op}$	Operating leakage current	Betriebsreststrom
l	Case length, nominal dimension	Gehäuselänge, Nennmaß
l_{max}	Maximum case length (without terminals and mounting stud)	Maximale Gehäuselänge (ohne Anschlüsse und Gewindebolzen)
R	Resistance	Widerstand
R_{ins}	Insulation resistance	Isolationswiderstand
R_{symm}	Balancing resistance	Symmetrierwiderstand
T	Temperature	Temperatur
ΔT	Temperature difference	Temperaturdifferenz
T_A	Ambient temperature	Umgebungstemperatur
T_C	Case temperature	Gehäusetemperatur
T_B	Capacitor base temperature	Temperatur des Gehäusebodens
t	Time	Zeit
Δt	Period	Zeitraum
t_b	Service life (operating hours)	Brauchbarkeitsdauer (Betriebszeit)

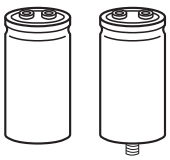

Symbol	English	German
V	Voltage	Spannung
V_F	Forming voltage	Formierspannung
V_{op}	Operating voltage	Betriebsspannung
V_R	Rated voltage, DC voltage	Nennspannung, Gleichspannung
V_S	Surge voltage	Spitzenspannung
X_C	Capacitive reactance	Kapazitiver Blindwiderstand
X_L	Inductive reactance	Induktiver Blindwiderstand
Z	Impedance	Scheinwiderstand
Z_T	Impedance at temperature T	Scheinwiderstand bei Temperatur T
tan δ	Dissipation factor	Verlustfaktor
λ	Failure rate	Ausfallrate
ε_0	Absolute permittivity	Elektrische Feldkonstante
ε_r	Relative permittivity	Dielektrizitätszahl
ω	Angular velocity; $2 \cdot \pi \cdot f$	Kreisfrequenz; $2 \cdot \pi \cdot f$

Note

All dimensions are given in mm.

Important notes

The following applies to all products named in this publication:

1. Some parts of this publication contain **statements about the suitability of our products for certain areas of application**. These statements are based on our knowledge of typical requirements that are often placed on our products in the areas of application concerned. We nevertheless expressly point out **that such statements cannot be regarded as binding statements about the suitability of our products for a particular customer application**. As a rule, we are either unfamiliar with individual customer applications or less familiar with them than the customers themselves. For these reasons, it is always ultimately incumbent on the customer to check and decide whether a product with the properties described in the product specification is suitable for use in a particular customer application.
2. We also point out that **in individual cases, a malfunction of electronic components or failure before the end of their usual service life cannot be completely ruled out in the current state of the art, even if they are operated as specified**. In customer applications requiring a very high level of operational safety and especially in customer applications in which the malfunction or failure of an electronic component could endanger human life or health (e.g. in accident prevention or lifesaving systems), it must therefore be ensured by means of suitable design of the customer application or other action taken by the customer (e.g. installation of protective circuitry or redundancy) that no injury or damage is sustained by third parties in the event of malfunction or failure of an electronic component.
3. **The warnings, cautions and product-specific notes must be observed.**
4. In order to satisfy certain technical requirements, **some of the products described in this publication may contain substances subject to restrictions in certain jurisdictions (e.g. because they are classed as hazardous)**. Useful information on this will be found in our Material Data Sheets on the Internet (www.tdk-electronics.tdk.com/material). Should you have any more detailed questions, please contact our sales offices.
5. We constantly strive to improve our products. Consequently, **the products described in this publication may change from time to time**. The same is true of the corresponding product specifications. Please check therefore to what extent product descriptions and specifications contained in this publication are still applicable before or when you place an order. We also **reserve the right to discontinue production and delivery of products**. Consequently, we cannot guarantee that all products named in this publication will always be available. The aforementioned does not apply in the case of individual agreements deviating from the foregoing for customer-specific products.
6. Unless otherwise agreed in individual contracts, **all orders are subject to our General Terms and Conditions of Supply**.

Important notes

7. **Our manufacturing sites serving the automotive business apply the IATF 16949 standard.** The IATF certifications confirm our compliance with requirements regarding the quality management system in the automotive industry. Referring to customer requirements and customer specific requirements ("CSR") TDK always has and will continue to have the policy of respecting individual agreements. Even if IATF 16949 may appear to support the acceptance of unilateral requirements, we hereby like to emphasize that **only requirements mutually agreed upon can and will be implemented in our Quality Management System.** For clarification purposes we like to point out that obligations from IATF 16949 shall only become legally binding if individually agreed upon.
8. The trade names EPCOS, CeraCharge, CeraDiode, CeraLink, CeraPad, CeraPlas, CSMP, CTVS, DeltaCap, DigiSiMic, ExoCore, FilterCap, FormFit, LeaXield, MiniBlue, MiniCell, MKD, MKK, MotorCap, PCC, PhaseCap, PhaseCube, PhaseMod, PhiCap, PowerHap, PQSine, PQvar, SIFERRIT, SIFI, SIKOREL, SilverCap, SIMDAD, SiMic, SIMID, SineFormer, SIOV, ThermoFuse, WindCap are **trademarks registered or pending** in Europe and in other countries. Further information will be found on the Internet at www.tdk-electronics.tdk.com/trademarks.

Release 2018-10

Mouser Electronics

Authorized Distributor

Click to View Pricing, Inventory, Delivery & Lifecycle Information:

EPCOS / TDK:

B43743A5478M000 B43743A5688M000 B43743A9159M000 B43743B9398M000 B43743B9478M000
B43743C9478M007 B43763A4478M000 B43763A4478M008 B43743B5158M000 B43743B5278M000
B43743B5338M000 B43743B5568M000 B43743B9109M007 B43743B9338M000 B43763B9478M000
B43763B9478M008 B43763C5338M000 B43763C9478M000 B43763C9478M008 B43743B4568M000
B43763A5688M000 B43763A9278M000 B43763A9478M000 B43763B4828M050 B43763B5338M000
B43763B5478M000 B43763A4828M000 B43763A5228M000 B43763A5278M000 B43763A5478M000
B43763A5478M008 B43763A5568M000 B43763A4688M000 B43743A4189M000 B43743A4688M000
B43743A5109M000 B43743A5278M000 B43743A5398M000 B43743A9478M000 B43743A9568M000
B43743A9688M000 B43743A9828M000 B43743A9828M007 B43743B4278M000

Мы молодая и активно развивающаяся компания в области поставок электронных компонентов. Мы поставляем электронные компоненты отечественного и импортного производства напрямую от производителей и с крупнейших складов мира.

Благодаря сотрудничеству с мировыми поставщиками мы осуществляем комплексные и плановые поставки широчайшего спектра электронных компонентов.

Собственная эффективная логистика и склад в обеспечивает надежную поставку продукции в точно указанные сроки по всей России.

Мы осуществляем техническую поддержку нашим клиентам и предпродажную проверку качества продукции. На все поставляемые продукты мы предоставляем гарантию .

Осуществляем поставки продукции под контролем ВП МО РФ на предприятия военно-промышленного комплекса России , а также работаем в рамках 275 ФЗ с открытием отдельных счетов в уполномоченном банке. Система менеджмента качества компании соответствует требованиям ГОСТ ISO 9001.

Минимальные сроки поставки, гибкие цены, неограниченный ассортимент и индивидуальный подход к клиентам являются основой для выстраивания долгосрочного и эффективного сотрудничества с предприятиями радиоэлектронной промышленности, предприятиями ВПК и научно-исследовательскими институтами России.

С нами вы становитесь еще успешнее!

Наши контакты:

Телефон: +7 812 627 14 35

Электронная почта: sales@st-electron.ru

Адрес: 198099, Санкт-Петербург, Промышленная ул, дом № 19, литера Н, помещение 100-Н Офис 331