SEC1110/SEC1210

Smart Card Bridge to USB, SPI, and UART Interfaces

PRODUCT FEATURES

Datasheet

The SEC1110 and SEC1210 provide a single-chip solution for a Smart Card bridge to USB, SPI, and UART interfaces. These bridges are controlled by an enhanced 8051 micro controller and all chip peripherals are accessed and controlled through the SFR or XDATA register space. TrustSpan™ Technology enables digital systems to securely communicate, process, move and store information on system boards, across networks and through the cloud.

Feature Highlights

- Smart Card
  - The SEC1110 provides one Smart Card interface and the SEC1210 provides two
  - Fully compliant with ISO/IEC 7816, EMV 4.2/4.3, ETSI TS 102 221 and PC/SC standards
  - Versatile ETU rate generation, supporting current and proposed rates (up to 826 Kbps)
  - Full support of both T=0 and T=1 protocols
  - Full-packet FIFO (261 bytes), for transmit and receive
  - Half-duplex operation (no software intervention required between transmit and receive phases of exchange)
  - Loose real-time response required of software (approximately 180 ms)
  - Dynamically programmable FIFO threshold with byte granularity
  - Time-out FIFO flush interrupt, independent of threshold
  - Programmable Smart Card clock frequency
  - UART-like register file structure
  - Supports Class A, Class B, Class C, or Class AB Smart Cards (1.8 V, 3.0 V and 5.0 V cards)
  - Automatic character repetition for T=0 protocol parity error recovery
  - Automatic card deactivation on card removal and on other system events, including persistent parity errors
  - Internal procedure byte filtering for T=0 protocol
  - Protocol timers (Guard, Timeout, and CWT) for EMV-defined timing parameters
    - Detection of an unresponsive card
    - Activation/deactivation sequences
    - Cold/warm resets
    - Monitoring for all EMV timing constraints
    - 16-bit general purpose down counter for software timing use
  - Fully compliant ESD protection on card pins
- USB
  - 12 Mbps USB operation compliant to the USB 2.0 Specification
  - Integrated USB 1.5 K pull-up resistor and Dp,Dm series termination resistors
  - Integrated USB devices controller with:
    - 8/16/32/64 byte control buffer
    - Five 8/16/32/64 byte programmable (bulk/interrupt) endpoint buffers
- 8051 Processor
  - Reduced instruction cycle time (approximately 9 times 80C51)
  - 9.6 MHz max clock speed
  - Enhanced peripherals; three 16-bit timers, watchdog timer, interrupt controller, JTAG
  - OTP (One Time Programmable) ROM : 16 KBRAM : 1.5 KB
- Boot ROM : 16 KB UART (SEC1210 only)
  - Standard PC baud rates supported
  - 3 M baud high-speed rate (not PC standard)
- SPI (SEC1210 only)
  - Master and Slave capability with 12 MHz max performance
- General
  - 5.0 V tolerance on user accessible IO pins
  - Self-clocking internal oscillator, no external crystal required
  - 3.0 V - 5.5 V supply input
    - Internal 4.8 V comparator disables Class A card support if the input voltage is too low
  - Available in commercial (0ºC to +70ºC) and industrial (-40ºC to +85ºC) temperature ranges

Applications

- USB Smart Card reader
- SPI-based Smart Card reader
- UART-based Smart Card reader
- Dual Smart Card reader

© 2013 Microchip Technology Inc.

Order Numbers:

ORDER NUMBERS	LEAD-FREE ROHS COMPLIANT PACKAGE	TRAY / TAPE & REEL	TEMP. RANGE	COMMENTS
SEC1110-A5-02	16QFN	Tray	0ºC to +70ºC	
SEC1110-A5-02-TR	16QFN	Tape & Reel	0ºC to +70ºC	
SEC1110i-A5-02	16QFN	Tray	-40ºC to +85ºC	
SEC1110i-A5-02-TR	16QFN	Tape & Reel	-40ºC to +85ºC	
SEC1110-A5-02NC	16QFN	Tray	0ºC to +70ºC	No ROM Code
SEC1110-A5-02NC-TR	16QFN	Tape & Reel	0ºC to +70ºC	No ROM Code
SEC1210-CN-02	24QFN	Tray	0ºC to +70ºC	
SEC1210-CN-02-TR	24QFN	Tape & Reel	0ºC to +70ºC	
SEC1210i-CN-02	24QFN	Tray	-40ºC to +85ºC	
SEC1210i-CN-02-TR	24QFN	Tape & Reel	-40ºC to +85ºC	
SEC1210-CN-02NC	24QFN	Tray	0ºC to +70ºC	No ROM Code
SEC1210-CN-02NC-TR	24QFN	Tape & Reel	0ºC to +70ºC	No ROM Code

This product meets the halogen maximum concentration values per IEC61249-2-21

© 2013 Microchip Technology Inc.

Conventions

Within this manual, the following abbreviations and symbols are used to improve readability.

Example	Description
BIT	Name of a single bit within a field
FIELD.BIT	Name of a single bit (BIT) in FIELD
x…y	Range from x to y, inclusive
BITS[m:n]	Groups of bits from m to n, inclusive
PIN	Pin Name
zzzzb	Binary number (value zzzz)
0xzzz	Hexadecimal number (value zzz)
zzh	Hexadecimal number (value zz)
rsvd	Reserved memory location. Must write 0, read value indeterminate
`code`	Instruction code, or API function or parameter
Section Name	Section or Document name
x	Don't care
<Parameter>	<> indicate a Parameter is optional or is only used under some conditions
{,Parameter}	Braces indicate Parameter(s) that repeat one or more times
[Parameter]	Brackets indicate a nested Parameter. This Parameter is not real and actually decodes into one or more real parameters.

Table of Contents

Chapter 1 General Description . . . 15
1.1 Feature Highlights . . . 15
1.2 Smart Card Subsystem . . . 16
1.3 USB Subsystem . . . 17
1.3.1 FS USB PHY and Device Controller . . . 17
1.3.2 Interface Bridge and Endpoint Buffers . . . 17
1.4 Power Management Unit . . . 17

Chapter 2 Block Diagrams . . . 18

Chapter 3 Pin Table . . . 20
3.1 SEC1110 16-Pin QFN . . . 20
3.2 SEC1210 24-Pin QFN . . . 20

Chapter 4 Pin Configurations . . . 22

Chapter 5 Pin Descriptions . . . 24
5.1 SEC1110 and SEC1210 Pin Descriptions . . . 24
5.2 Buffer Type Descriptions . . . 28

Chapter 6 Pin Reset States . . . 29

Chapter 7 8051 Embedded Controller . . . 33
7.1 Sleep/Power Management . . . 34
7.1.1 EC Data Memory . . . 34
7.1.2 EC OTP Instruction Memory . . . 35
7.2 EC Registers . . . 35
7.3 EC Memory Map . . . 35

Chapter 8 EC External Interrupts . . . 38
8.1 General Description . . . 38
8.2 Interrupt Summary . . . 38
8.3 EC ISR . . . 40
8.4 Wake-up Interrupt Source Register . . . 41

Chapter 9 8051 Special Function Registers . . . 43
9.1 Special Function Registers Locations . . . 43
9.1.1 Accumulator Register – ACC . . . 44
9.1.2 B Register – B . . . 44
9.1.3 Program Status Word Register – PSW . . . 44
9.1.4 Stack Pointer Register – SP . . . 45
9.1.5 Data Pointer and Data Pointer 1 Registers – DPH, DPL and DPH1, DPL1 . . . 46
9.1.6 Data Pointer Select Register – DPS . . . 46
9.1.7 Data Pointer Control Register – DPC . . . 47
9.1.8 Program Memory Page Selector Register – PAGESEL . . . 47
9.1.9 Data Memory Page Selector Register – D_PAGESEL . . . 48
9.1.10 Timer/Counter Control Register – TCON . . . 49
9.1.11 Timer Mode Register – TMOD . . . 50
9.1.12 Timer 0,1,2 – TH0, TL0, TH1, TL1, TH2, TL2 . . . 51
9.1.13 Timer 2 Control Register – T2CON . . . 52

© 2013 Microchip Technology Inc.

9.1.14 Timer 2 Compare/Capture Enable Register – CCEN . . . 53
9.1.15 Timer 2 Compare/Capture Registers – CC1, CC2, CC3 . . . 53
9.1.16 Timer 2 Compare/Capture Registers – CRCH, CRCL . . . 54
9.1.17 Watchdog Timer Reload Register – WDTREL . . . 55
9.1.18 Interrupt Enable 0 Register – IEN0 . . . 55
9.1.19 Interrupt Enable 1 Register – IEN1 . . . 56
9.1.20 Interrupt Enable 2 Register – IEN2 . . . 57
9.1.21 Interrupt Priority Registers – IP0, IP1 . . . 58
9.1.22 Power Control Register – PCON . . . 59
9.1.23 Software Reset Register – SRST . . . 60
9.1.24 SPI1 Serial Peripheral Status Register – SPSTA . . . 61
9.1.25 SPI1 Serial Peripheral Control Register – SPCON . . . 62
9.1.26 SPI1 Serial Peripheral Data Register – SPDAT . . . 63
9.1.27 SPI1 Serial Peripheral Slave Select Register – SPSSN . . . 63
9.2 Special Function Registers Summary . . . 64

Chapter 10 Smart Card Interface . . . 66
10.1 Interconnect to Smart Card Terminal . . . 66
10.2 Top Level of the Smart Card Interface . . . 67
10.3 General Description . . . 68
10.4 Character Framing . . . 69
10.5 Clocking and Baud Rate Generation . . . 70
10.5.1 Clock Rate Generation . . . 70
10.5.2 etu Rate Generation . . . 70
10.5.3 Recommended etu Rates and Settings . . . 71
10.6 16-bit General Purpose Counter . . . 75
10.7 T=1 Operation . . . 75
10.7.1 Operation of Timers in T=1 Mode . . . 75
10.8 T=0 Operation . . . 77
10.8.1 T=0 Timer Operation . . . 77
10.9 T=0 Byte Filtering . . . 78
10.9.1 T=0 Outgoing Byte Filter . . . 78
10.9.2 T=0 Incoming Byte Filter . . . 80
10.9.3 ATR Reception . . . 83
10.9.4 Guard Time Algorithm . . . 84
10.9.5 Card Power for Smart Card Interface . . . 85
10.9.6 LED Control for Smart Card Interface . . . 86
10.9.7 Enabling the Synchronous Smart Card Interface . . . 86
10.10 Register Map . . . 87
10.11 Smart Card Wrapper Control Registers . . . 88
10.11.1 Automatic Control of Idle Condition on Smart Card Interface . . . 89
10.12 Synchronous Interface Registers . . . 90
10.12.1 Synchronous Interface Output . . . 95
10.13 Power . . . 95
10.14 Asynchronous Interface Registers . . . 95
10.14.1 Asynchronous Mode Registers . . . 96

Chapter 11 USB Controller Description . . . 118
11.1 Transaction Flow . . . 121
11.2 Control Transactions . . . 123
11.2.1 Setup Stage . . . 123
11.2.2 Data Stage: Control Endpoint 0 Direction . . . 124
11.2.3 Status Stage . . . 124
11.3 USB Reset . . . 124
11.4 STALL Handshake . . . 124

11.5 Start of Frame Detection . . . 124
11.6 Data Toggle Bit . . . 124
11.7 NAK Handshakes . . . 125
11.8 Suspend . . . 125
11.9 Resume . . . 125
11.10 Remote Wake-Up . . . 125
11.11 USB Registers Summary . . . 127
11.12 USB Configuration Registers . . . 128
11.13 USB Control, Status and Interrupt Registers . . . 132
11.14 USB Endpoint 0~5 Status and Control Registers . . . 135
11.15 USB Endpoint 0 Buffer Registers . . . 136
11.16 Endpoints 1~5 Buffer Registers . . . 139

Chapter 12 GPIO and LED Interface . . . 145
12.1 GPIO Pin Mapping . . . 145
12.1.1 Procedure for Reading the BOND_OPT Register . . . 149
12.2 Functional Mode and Test Modes . . . 149
12.3 GPIO Registers Summary . . . 151
12.4 GPIO Registers . . . 154
12.4.1 GPIO Wake-Up Event . . . 164

Chapter 13 Two Pin Serial Port (UART) . . . 165
13.1 Transmit Operation . . . 165
13.2 Receive Operation . . . 165
13.3 Power, Clocks and Reset . . . 166
13.3.1 Power . . . 166
13.3.2 Clocks . . . 166
13.3.3 Reset . . . 166
13.4 Interrupts . . . 166
13.5 Registers . . . 167
13.6 Register Summary . . . 167
13.7 Detailed Description of Accessible Runtime Registers . . . 169
13.7.1 Receive Buffer Register (RB) . . . 169
13.7.2 Transmit Buffer Register (TB) . . . 169
13.7.3 Interrupt Enable Register (IER) . . . 169
13.7.4 FIFO Control Register (FCR) . . . 170
13.7.5 Interrupt Identification Register (IIR) . . . 171
13.7.6 Line Control Register (LCR) . . . 173
13.7.7 Modem Control Register (MCR) . . . 174
13.7.8 Line Status Register (LSR) . . . 175
13.7.9 Modem Status Register (MSR) . . . 176
13.7.10 Scratchpad Register (SCR) . . . 177
13.7.11 Programmable Baud Rate Generator (and Divisor) . . . 177
13.7.12 UART Configuration Select Register . . . 179

Chapter 14 Serial Peripheral Interconnect (SPI1) - Master/Slave . . . 180
14.1 SPI1 Master Mode . . . 181
14.1.1 SPI1 Slave Mode . . . 184

Chapter 15 SPI2 Controller . . . 185
15.1 Device Operation Instructions . . . 185
15.2 Operation of the High Speed Read Sequence . . . 186
15.3 Operation of the Dual High Speed Read Sequence . . . 187
15.4 32-Byte Cache . . . 188

© 2013 Microchip Technology Inc.

15.5 Operation of the FW interface to the SPI2 Port When Not Doing Fast Reads 188
15.5.1 Erase Example 189
15.5.2 Byte Program Example 190
15.5.3 Command Only Program Example 190
15.5.4 JEDEC-ID Read Example 190
15.5.5 Trace FIFO Write Example 191
15.5.6 SPI2 Registers. 192
15.6 SPI2 Timing 194

Chapter 16 Clock and Reset 195
16.1 Reset 196
16.2 Oscillator. 196
16.2.1 System Clock Shutdown 196
16.2.2 System Clock Wake-up 196
16.3 CLK_PWR Registers Summary 197
16.4 Oscillator Registers. 198
16.4.1 Oscillator Control Register. 198
16.4.2 Oscillator 48 MHz Settle Time Register. 199
16.4.3 Oscillator 32 kHz Registers 200
16.4.4 Oscillator Test Registers 200
16.4.5 Memory Clock Divide Register 200
16.4.6 CPU Clock Divide Register 201
16.4.7 USB Clock Register. 203
16.4.8 UART Clock Register 203
16.4.9 SPI1 Clock Register 204
16.4.10 SPI2 Clock Register 204
16.4.11 Smart Card1 Clock Register 205
16.4.12 Smart Card2 Clock Register 206
16.5 Wake On Event Register 207
16.6 Valid Clock Frequencies. 208
16.7 Power 212
16.7.1 CPU Sleep/Power Management 213
16.7.2 Power States 213
16.7.3 Power Status Registers. 216
16.7.4 Power Control 1 Register 217
16.8 One Time Programmable ROM Configuration 219
16.9 Clock Power Test Registers 219

Chapter 17 OTP ROM Test Interface 222
17.1 OTP ROM Test Registers Summary 223
17.2 OTP_ROM Description. 223
17.2.1 Boot Rows 223
17.2.2 Redundant Mode. 224
17.2.3 Row Redundancy 224
17.2.4 Special Registers. 226
17.2.5 Serial Test Port Interface. 227
17.2.6 Parallel Access to Test Port Interface 230
17.2.7 Memory Commands 233

Chapter 18 TEST Modes, JTAG, and XNOR. 234
18.1 Functional 8051 JTAG Capabilities 234

Chapter 19 DC Parameters. 235
19.1 Maximum Guaranteed Ratings. 235

19.2 Operating Conditions 236
19.3 DC Electrical Characteristics 237
19.4 Power Consumption 243
19.5 Package Thermal Specifications 244

Chapter 20 8051 Timers 246
20.1 General Description 246
20.2 Timer 0 246
20.2.1 Mode 0 and Mode 1 246
20.2.2 Mode 2 247
20.2.3 Mode 3 248
20.3 Timer 1 248
20.3.1 Mode 0 and Mode 1 248
20.3.2 Mode 2 249
20.3.3 Mode 3 250
20.4 Timer 2 250
20.4.1 Timer Mode 250
20.4.2 Event Counter Mode 250
20.4.3 Gated Timer Mode 250
20.4.4 Timer 2 Reload 250
20.4.5 Compare Function 251
20.5 Extended Watchdog_Timer 252
20.5.1 Enabling the Watchdog 253
20.5.2 Refreshing the Watchdog Timer 253

Chapter 21 Timing Diagrams 254
21.1 Serial Port Data Timing 254
21.2 JTAG Interface Timing 254

Chapter 22 Package Outline 256
22.1 Pb-Free Reflow 258

Chapter 23 Revision History 259
A.1 Acronyms 260
A.2 Definitions 261

© 2013 Microchip Technology Inc.

List of Tables

Table 3.1 SEC1110 16-Pin Package . . . 20
Table 3.2 SEC1210 24-Pin Package . . . 20
Table 5.1 SEC1110 and SEC1210 Pin Descriptions . . . 24
Table 5.2 SEC1110 and SEC1210 Buffer Type Descriptions . . . 28
Table 6.1 Legend for Pin Reset States Table . . . 29
Table 6.2 SEC1110 QFN 16-Pin Reset States . . . 30
Table 6.3 SEC1210 QFN 24-Pin Reset States . . . 30
Table 7.1 Code Execution Truth Table . . . 35
Table 7.2 CODE SPACE . . . 35
Table 7.3 XDATA SPACE RANGES . . . 36
Table 7.4 CPU Boot address mapping . . . 36
Table 8.1 Interrupt Vector Mapping . . . 38
Table 8.2 Interrupt Priority Groups . . . 40
Table 9.1 Special Function Register Locations . . . 43
Table 9.2 ACC . . . 44
Table 9.3 B Register . . . 44
Table 9.4 Program Status Word Register . . . 44
Table 9.5 Register Bank Locations . . . 45
Table 9.6 Stack Pointer Register . . . 45
Table 9.7 Data Pointer(1) Low Register . . . 46
Table 9.8 Data Pointer(1) High Register . . . 46
Table 9.9 Data Pointer Select Register . . . 46
Table 9.10 Data Pointer Control Register . . . 47
Table 9.11 Program Memory Page Selector Register . . . 47
Table 9.12 Data Memory Page Selector Register . . . 48
Table 9.13 Timer/Counter Control Register . . . 49
Table 9.14 Timer Mode Register . . . 50
Table 9.15 Timer/Counter Modes . . . 50
Table 9.16 Timer 0, 1, and 2 Low Byte . . . 51
Table 9.17 Timer 0, 1, and 2 High Byte . . . 51
Table 9.18 Timer 2 Control Register . . . 52
Table 9.19 Time 2 Compare/Capture Enable Register . . . 53
Table 9.20 Timer 2 Compare/Capture Registers Low Byte . . . 53
Table 9.21 Timer 2 Compare/Capture Registers High Byte . . . 54
Table 9.22 Timer 2 Compare/Capture Registers . . . 54
Table 9.23 Timer 2 Compare/Capture Register . . . 54
Table 9.24 Watchdog Timer Reload Register . . . 55
Table 9.25 Interrupt Enable 0 Register . . . 55
Table 9.26 Interrupt Enable 1 Register . . . 56
Table 9.27 Interrupt Enable 2 Register . . . 57
Table 9.28 Interrupt Priority 0 Register . . . 58
Table 9.29 Interrupt Priority 1 Register . . . 58
Table 9.30 Priority Groups . . . 58
Table 9.31 Priority Levels . . . 59
Table 9.32 Power Control Register . . . 59
Table 9.33 Software Reset Register . . . 60
Table 9.34 SPI1 Serial Peripheral Status Register . . . 61
Table 9.35 SPI1 Serial Peripheral Control Register . . . 62
Table 9.36 SPI1 Transfer Rate . . . 62
Table 9.37 SPI1 Serial Peripheral Data Register . . . 63
Table 9.38 SPI Serial Peripheral Slave Select Register . . . 63
Table 9.39 Special Function Registers Summary . . . 64

© 2013 Microchip Technology Inc.

Table 10.1 Character Frame Format . . . 69
Table 10.2 Recommended Settings for Valid TA1 ETU Rates . . . 71
Table 10.3 Smart Card Memory Map . . . 87
Table 10.4 Smart Card1, 2 Controller Registers . . . 87
Table 10.5 Smart Card Control Register . . . 88
Table 10.6 Smart Card Current Control Register . . . 90
Table 10.7 Smart Card Sync RST Control Register . . . 90
Table 10.8 Smart Card Sync CLK Control Register . . . 91
Table 10.9 Smart Card Sync FCB Control Register . . . 91
Table 10.10 Smart Card Sync SPU Control Register . . . 92
Table 10.11 Smart Card Sync IO Control Register . . . 93
Table 10.12 Smart Card Sync ALL Control Register . . . 93
Table 10.13 Smart Card Transmit/Receive Buffer Register . . . 96
Table 10.14 Smart Card Interrupt Enable Register . . . 96
Table 10.15 Smart Card Interrupt Identification Register . . . 97
Table 10.16 Interrupt Control Table . . . 98
Table 10.17 Smart Card Line Control Register . . . 99
Table 10.18 Smart Card Interface Monitor Register . . . 100
Table 10.19 Smart Card Line Status Register . . . 101
Table 10.20 Smart Card Block Master Control Register . . . 102
Table 10.21 Smart Card Interface Control Register . . . 102
Table 10.22 Smart Card Data Register . . . 103
Table 10.23 Smart Card Protocol Status Register . . . 103
Table 10.24 Smart Card Protocol Interrupt Pending Register . . . 104
Table 10.25 Smart Card Protocol Interrupt Enable Register . . . 105
Table 10.26 Smart Card Timer Status Register . . . 106
Table 10.27 Smart Card Baud Divisor LSB Register . . . 106
Table 10.28 Smart Card Baud Divisor MSB Register . . . 106
Table 10.29 Smart Card FIFO Control Register . . . 107
Table 10.30 Smart Card Timeout Timer Least Significant Byte (LSB) Reload Register . . . 108
Table 10.31 Smart Card Timeout Timer Middle Significant Byte (MSB) Reload Register . . . 108
Table 10.32 Smart Card Timeout Timer High Significant Byte (HSB) Reload Register . . . 108
Table 10.33 Smart Card Down Counter LSB Register . . . 108
Table 10.34 Smart Card Down Counter MSB Reload Register . . . 108
Table 10.35 Smart Card CWT Timer LSB Reload Register . . . 109
Table 10.36 Smart Card CWT Timer MSB Reload Register . . . 109
Table 10.37 Smart Card Guard Algorithm Spacing Register . . . 109
Table 10.38 Smart Card Guard Algorithm Spacing Register . . . 109
Table 10.39 Smart Card Guard Timer Reload A Register . . . 110
Table 10.40 Smart Card Guard Timer Reload B Register . . . 110
Table 10.41 Smart Card Protocol Mode Register . . . 111
Table 10.42 Smart Card Timer Control Register . . . 111
Table 10.43 Smart Card Clock Divisor Register . . . 112
Table 10.44 Smart Card Configuration Block Register . . . 112
Table 10.45 Smart Card LED Control Register . . . 113
Table 10.46 Smart Card FIFO Threshold LSB Register . . . 114
Table 10.47 Smart Card FIFO Threshold MSB Register . . . 114
Table 10.48 Smart Card FIFO Count LSB Register . . . 114
Table 10.49 Smart Card FIFO Count MSB Register . . . 114
Table 10.50 Smart Card Filter Length Register . . . 115
Table 10.51 Smart Card INS Code Register . . . 115
Table 10.52 Smart Card Debounce Register . . . 115
Table 10.53 Smart Card Debounce Register . . . 116
Table 10.54 Smart Card Test Register . . . 116

 © 2013 Microchip Technology Inc.

Table 10.55 Smart Card Test Register . . . 117
Table 10.56 Smart Card Test Debounce Register . . . 117
Table 10.57 Smart Card FIFO Test Register. . . . 117
Table 11.1 USB Register Offsets . . . 127
Table 11.2 USB Config Address Low Register . . . 128
Table 11.3 USB Config Address High Register. . . . 129
Table 11.6 USB UDC Control Registers . . . 132
Table 11.7 USB UDC Status Register. . . . 132
Table 11.8 USB SOF Register . . . 133
Table 11.9 USB Interrupt Register . . . 133
Table 11.10 USB Interrupt Enable Register . . . 134
Table 11.11 USB Endpoint 0~5 Status and Control Register . . . 135
Table 11.12 USB Endpoint 0 Write Address Low Register . . . 137
Table 11.13 USB Endpoint 0 Write Address High Register. . . . 137
Table 11.14 USB Endpoint 0 Write Byte Count Register . . . 137
Table 11.15 USB Endpoint 0 Read Address Low Register . . . 138
Table 11.16 USB Endpoint 0 Read Address High Register . . . 138
Table 11.17 USB Endpoint 0 Read Byte Count Register . . . 139
Table 11.18 USB Endpoint 1-5 Address Low Register . . . 139
Table 11.19 USB Endpoint 1~5 Address High Register . . . 140
Table 11.20 USB Endpoint 1~5 Byte Count0 Register . . . 140
Table 11.21 USB Endpoint 1~5 Byte Count1 Register . . . 141
Table 11.22 USB Endpoint 0~5 Buffer ready Register . . . 142
Table 11.23 USB Endpoint Interrupt Register . . . 143
Table 11.24 USB Endpoint Interrupt Enable Register. . . . 144
Table 12.1 GPIO Pin Mapping. . . . 146
Table 12.2 Bond Options. . . . 149
Table 12.3 Functional Mode and Test Modes . . . 150
Table 12.4 GPIO Register Map . . . 151
Table 12.5 GPIO Auxiliary Port 0,1,2,3 Enable Register. . . . 155
Table 12.6 GPIO Port 0,1,2,3 Direction Register . . . 155
Table 12.7 GPIO Port 0,1,2,3 In Register . . . 155
Table 12.8 GPIO Port 0,1,2,3 Output Register . . . 156
Table 12.9 GPIO Port 0,1,2 Pull Up/down Enable Register . . . 156
Table 12.10 GPIO Port 0,1,2,3 Debounce Count Register . . . 157
Table 12.11 GPIO Auxiliary Port 0,1,2,3 Select A/B Register . . . 157
Table 12.12 GPIO Port 0,1,2,3 Interrupt Enable Register. . . . 158
Table 12.13 GPIO Port 0,1,2,3 Pull Up/Down Select Register . . . 158
Table 12.14 GPIO Port 0,1,2,3 Output Enable Register . . . 159
Table 12.15 GPIO Port 0,1,2,3 Input Type Register . . . 159
Table 12.16 GPIO Port 0,1,2,3 Interrupt Edge Enable Register . . . 160
Table 12.17 GPIO Port 0,1,2,3 Input Enable Register . . . 160
Table 12.18 GPIO Port 0,1,2,3 Interrupt Status Register . . . 161
Table 12.19 GPIO Port 0,1,2,3 Pull Up Strength Register . . . 161
Table 12.20 GPIO Port 0,1,2,3 Debounce Enable Register . . . 162
Table 12.21 Power on Reset State of GPIO Registers . . . 163
Table 13.1 Reset Function Table . . . 166
Table 13.2 Two Pin Serial Port (UART) Register Summary . . . 167
Table 13.3 Register Summary. . . . 167
Table 13.4 Interrupt Control Table. . . . 172
Table 13.5 Stop Bits . . . 174
Table 13.6 UART Baud Rates (48.00 MHz Source) . . . 178
Table 13.7 UART Baud Rates (4.00 MHz source) . . . 179
Table 15.1 SPI Opcodes . . . 185
Table 16.1 CLK_PWR Register Map. . . . 197

Table 16.2 Oscillator 48 MHz Clock Control Register . . . 198
Table 16.3 Oscillator 48 MHz Settling time . . . 199
Table 16.4 Oscillator 32 KHz Clock Control Registers . . . 200
Table 16.5 Oscillator Test Registers . . . 200
Table 16.6 Memory Clock Divide Register . . . 200
Table 16.7 CPU Clock Divide Register . . . 201
Table 16.8 USB Clock Register . . . 203
Table 16.9 UART Clock Register . . . 203
Table 16.10 SPI1 Clock Register . . . 204
Table 16.11 SPI2 Clock Register . . . 204
Table 16.12 SC1 Clock Register . . . 205
Table 16.13 SC2 Clock Register . . . 206
Table 16.14 Wake on Event Register . . . 207
Table 16.15 Wake on Event Status Register . . . 207
Table 16.16 Valid Clock Frequencies . . . 208
Table 16.17 Power Status1 Register . . . 216
Table 16.18 Power Status2 Register . . . 216
Table 16.19 Power Control 1 Register . . . 217
Table 16.20 Power Control 2 Register . . . 218
Table 16.21 One Time Programmable Configuration Register . . . 219
Table 16.22 CLKPWR Test1 Register . . . 219
Table 16.23 CLKPWR Test2 Register . . . 220
Table 16.24 CLKPWR Test3 Register . . . 220
Table 16.25 CLKPWR Test4 Register . . . 221
Table 16.26 CLKPWR VERSION Register . . . 221
Table 17.1 OTP Test Registers Map . . . 223
Table 17.2 Boot Block Address Map for A10:=1 . . . 224
Table 17.3 OTP Redundancy Register . . . 225
Table 17.4 OTP Special Register . . . 226
Table 17.5 OTP SR Byte Assignment . . . 226
Table 17.6 TCMD[2:0] Instruction Decoder . . . 228
Table 17.7 TEST PORT Registers Mapping . . . 228
Table 17.8 TSO Output Multiplexer Description Burst Control Table . . . 229
Table 17.9 CPU Test Port Command Instruction Register . . . 230
Table 17.10 CPU Test Port Control Register . . . 230
Table 17.11 CPU Test Port Shift Register . . . 230
Table 17.12 CPU Test Port Status Register . . . 231
Table 17.13 OTP Mode Register LSB . . . 231
Table 17.14 OTP Mode Register MSB . . . 232
Table 17.15 OTP Mode A Register LSB . . . 232
Table 17.16 OTP Mode A register MSB . . . 232
Table 17.17 OTP Mode B Register LSB . . . 232
Table 17.18 OTP Mode B Register MSB . . . 232
Table 19.1 Pin Capacitance . . . 243
Table 19.2 SEC1110 Supply Current . . . 243
Table 19.3 SEC1210 Supply Current . . . 244
Table 19.4 Package Thermal Resistance Parameters . . . 244
Table 19.5 Legend . . . 245
Table 21.1 Serial Port Data Parameters . . . 254
Table 21.2 JTAG Interface Timing Parameters . . . 255
Table 22.1 Package Parameters . . . 256
Table 23.1 Revision History . . . 259

© 2013 Microchip Technology Inc.

List of Figures

Figure 1.1 USB Subsystem Block. 17
Figure 2.1 SEC1110 Block Diagram. 18
Figure 2.2 SEC1210 Block Diagram. 19
Figure 4.1 SEC1110 16-Pin QFN Package 22
Figure 4.2 SEC1210 24-Pin QFN Package 23
Figure 6.1 Pin Reset States 29
Figure 7.1 R8051XC2 Block Diagram. 34
Figure 8.1 Wake-up Interrupt 41
Figure 10.1 Smart Card 1 Interconnect 66
Figure 10.2 S.A.M Interface (Smart Card 2). 66
Figure 10.3 Smart Card1,2 Interconnect 67
Figure 10.4 T=0 Mode Character Transmission and Repetition Diagram 69
Figure 10.5 T=1 Events 76
Figure 10.6 Outgoing T=0 Command Sequence 79
Figure 10.7 T=0 Outgoing Byte Filter State Diagram 80
Figure 10.8 Incoming T=0 Command Sequence Example. 81
Figure 10.9 T=0 Incoming Byte Filter State Diagram 82
Figure 10.10 ATR Sequence, Cold Reset 83
Figure 10.11 ATR Sequence, Warm Reset 83
Figure 10.12 Guard Time Algorithm with Error, Transmit Abandoned 85
Figure 10.13 Guard Time Algorithm, No Error, Transmit Held 85
Figure 10.14 Smart Card Power-Up 86
Figure 10.2 Smart Card Synchronous Output Configurations 95
Figure 11.1 USB Block Diagram. 118
Figure 11.2 USB Bridge Layer 120
Figure 11.3 Typical Transaction 121
Figure 11.4 Bulk/Interrupt OUT Transaction. 121
Figure 11.5 Bulk / Interrupt OUT Transaction in Ping-Pong Mode 122
Figure 11.6 Bulk/Interrupt IN Transactions in Ping-Pong Mode 123
Figure 11.7 USB Remote Suspend/Resume 126
Figure 14.1 SPI1 Master/Slave Block Diagram 181
Figure 14.2 SPI1 Data Format in Master Mode (cpha=0, cpol=0) 182
Figure 14.3 SPI1 Data Format in Master Mode (cpha=0, cpol=1) 182
Figure 14.4 SPI1 Data Format in Master Mode (cpha=1, cpol=0) 183
Figure 14.5 SPI1 Data Format in Master Mode (cpha=1, cpol=1) 183
Figure 14.6 SPI1 Data Format in Slave Mode (cpha=1, cpol=1) 184
Figure 15.1 SPI Hi-Speed Read Operation 187
Figure 15.2 SPI Hi-Speed Read Sequence 187
Figure 15.3 SPI Dual Hi-Speed Read Operation 188
Figure 15.4 SPI Dual Hi-Speed Read Sequence 188
Figure 15.5 SPI Firmware-Controlled Operation 189
Figure 15.6 SPI Erase Sequence 189
Figure 15.7 SPI Byte Program 190
Figure 15.8 SPI Command Only Sequence 190
Figure 15.9 SPI JEDEC-ID Sequence 191
Figure 15.10 SPI Trace FIFO Write Operation 191
Figure 15.11 SPI Trace FIFO Write Example. 192
Figure 15.12 SPI Timing. 194
Figure 16.1 Clock Generation. 195
Figure 16.2 Clock Generation Example 1. 209
Figure 16.3 Clock Generation Example 2. 210
Figure 16.4 Clock Generation Example 3. 211

Figure 16.5 SEC1110/SEC1210 Power States 213
Figure 16.6 Power-on Sequencing 215
Figure 18.1 JTAG Test Block Diagram 234
Figure 19.1 Supply Rise Time Models 236
Figure 20.1 Timer 0 in Mode 0 and Mode 1 246
Figure 20.2 Timer 0 in Mode 2 247
Figure 20.3 Timer 0 in Mode 3 248
Figure 20.4 Timer 1 in Mode 0 and 1 249
Figure 20.5 Timer 1 in Mode 2 249
Figure 20.6 Timer 2 Block Diagram 250
Figure 20.7 Timer 2 in Compare Mode 0 251
Figure 20.8 Compare Mode 0 Operation 251
Figure 20.9 Timer 2 in Compare Mode 1 252
Figure 20.10 Extended Watchdog Block Diagram 252
Figure 21.1 Serial Port Data 254
Figure 21.2 JTAG Power-Up and Asynchronous Reset Timing 254
Figure 21.3 JTAG Setup and Hold Parameters 255
Figure 22.1 SEC1110 Package Outline 256
Figure 22.2 SEC1210 Package Drawing 257
Figure 22.3 QFN Pb-free Reflow Guideline 258

© 2013 Microchip Technology Inc.

Chapter 1 General Description

The SEC1110 and SEC1210 provide a single-chip solution for a Smart Card bridge to USB, SPI, and UARTinterfaces. These bridges are controlled by an enhanced 8051 micro controller and all chip peripherals are accessed and controlled through the SFR or XDATA register space.

1.1 Feature Highlights

- Smart Card

  Fully compliant with standards: ISO/IEC 7816, EMV 4.2/4.3, ETSI TS 102 221 and PC/SC

  Versatile ETU rate generation, supporting current and proposed rates (to 826 Kbps and beyond)

  Full support of both T=0 and T=1 protocols

  Full-packet FIFO (261 bytes), for transmit and receive

  Half-duplex operation, with no software intervention required between Transmit and Receive phases of an exchange

  Very loose real-time response required of software: approximately 180 ms worst case

  Dynamically programmable FIFO threshold, with byte granularity

  Time-out FIFO flush interrupt, independent of threshold

  Programmable Smart Card clock frequency

  UART-like register file structure

  Supports Class A, Class B, Class C, or Class AB Smart Cards (all 1.8 V, 3.0 V and 5.0 V cards)

  Automatic character repetition for T=0 protocol parity error recovery

  Automatic card deactivation on card removal and on other system events, including persistent parity errors

  Internal procedure byte filtering for T=0 protocol

  Protocol timers (guard, time-out and CWT) for EMV-defined timing parameters
  - –Detection of an unresponsive card
  - –Activation/deactivation sequences
  - –Cold/warm resets
  - –Monitoring for all EMV timing constraints
  - –16-bit general purpose down counter for software timing use

  Fully compliant ESD protection on card pins per JESD22-A114D (March 2006) and JESD22-A115A “Machine Model” from AN1181

  Fully EMV compliant, internal signal current limits

  3.3 V internal operation with 5.0 V tolerant buffers where required

  Self-contained management of Smart Card power:
  - –SC1_VCC and SC2_VCC, supply output
  - –Regulator for 1.8 V, 3.0 V, and 5.0 V from supply input
  - –Current limiter with over-current sense interrupt (short circuit detect)
  - –Hardware-guaranteed, compliant deactivation sequence on card removal
  - –Synchronous card support

- USB

  12 Mbps USB operation compliant with the *USB 2.0 Specification*

  Integrated USB 1.5 K pull-up resistor

  Integrated Series resistors on USB_DP, USB_DM

  Integrated USB devices controller with:
  - –8/16/32/64 byte control endpoint 0 buffer
  - –Five 8/16/32/64 byte programmable (bulk/interrupt) endpoint buffers

- 8051
  Reduced instruction cycle time (approximately 9 times 80C51)
  9.6 MHz max clock speed
  Enhanced peripherals: two 16-bit timers, watch dog timer, interrupt controller, JTAG
  16 KB One Time Programmable (OTP) ROM
  1.5 KB RAM
  4 KB (SEC1100/SEC1200)/ 16KB (SEC1110/SEC1210) ROM
- UART
  Standard PC (9600, 19200, 38400 and 115200) baud rates supported
  3 M baud high-speed rate (non-PC standard)
- SPI
  Master and Slave capability with 12 MHz max performance
- General
  5.0 V tolerance on user accessible IO pins
  Self-clocking internal oscillator, no external crystal required
  3.6 V-5.5 V supply input
  Internal 4.8 V comparator disables Class A card support if the input voltage is too low

1.2 Smart Card Subsystem

The SEC1110 and SEC1210 are fully compliant with the prevailing Smart Card standards: ISO7816, EMV, and PC/SC. It meets and exceeds all existing requirements for communication bit rate (ETU duration) and includes support for proposed bit rates up to 826 Kbps. Signal levels and current limits are also fully compliant.

The Smart Card power is regulated and switched internally, supporting all 5.0 V, 3.0 V, and 1.8 V Smart Cards (classes A, B, and C, respectively). Over-current protection is provided, and a detected over-current condition is available as an interrupt. The required standard activation and deactivation sequences are provided with software interaction. However, deactivation is handled in hardware as the card is being removed. This scenario guarantees the required sequence regardless of software participation. If the system clock is inactive at the time, the card movement is detected asynchronously, and the Wake-On Event feature is used to re-start the system clock so that the de-activation sequence can continue.

Interface signals to the Smart Card are designed to meet both standard drive levels and current limitations internally, requiring no external series resistors. ESD protection on these signals meets the full standard requirements.

The device is a superset of the familiar 16450 UART architecture, with extensions in the form of a larger FIFO, specialized state machines for T=0 protocol parsing, automatic half-duplex turnaround at the completion of a transmitted message, and a specially-designed set of timers to enforce standards compliance in timing (as required of a terminal by the ISO7816 and EMV standards).

With the full-packet-depth FIFO on-chip, software is almost totally excluded from real-time requirements. It loads an outgoing message into the FIFO, triggers the transfer, and reads the returned data at any time after it becomes available. The reset sequence (cold or warm) is equally hands-off: software sets up the sequence and activates the reset, and is alerted when the ATR message has been received (via the FIFO Threshold Interrupt). The threshold is dynamically programmable with byte granularity, so that threshold interrupts can be received at various stages in the processing of a message of initially unknown length (such as ATR).

For detecting data time-outs, and for other mandatory timing tasks having to do with communication with a Smart Card, a set of three protocol timers is provided:

- Time-out timer, for monitoring the standard WWT, BWT and WTX time-out intervals
- CWT timer, for monitoring the T=1 CWT time-out interval
- Guard timer, for guaranteeing the BGT and EGT transmission intervals, with special usage during a Reset sequence.

A separate general purpose timer is provided for software driver use.

Synchronous card support using GPIOs controlled via registers in the Smart Card device.

© 2013 Microchip Technology Inc.

1.3 USB Subsystem

The USB Subsystem is made up of the following 3 functional blocks

- FS USB PHY
- USB Device Controller (UDC)
- Interface Bridge with USB endpoint buffers

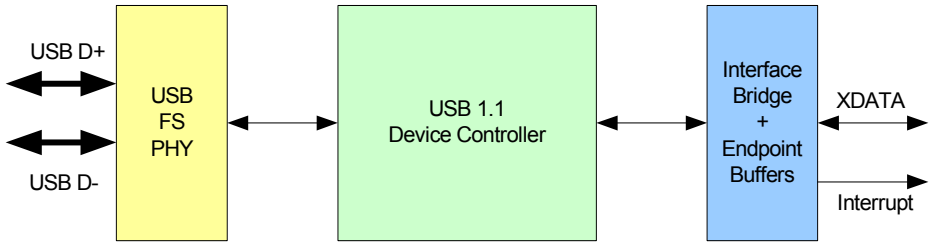

Figure 1.1 USB Subsystem Block

1.3.1 FS USB PHY and Device Controller

The FS USB PHY contains the D+ pull-up resistor and handles the reception of USB data. The D+ and D- signals are passed through the differential receiver (which is external to the device controller core) to get a single-ended bit stream. The device controller has a digital phase-locked loop (DPLL) to extract the clock and data information. The clock and data are passed to the SIE (serial interface engine) block to identify the sync pattern and for NRZI-NRZ conversion. This NRZ data is then passed through a bit-stripper which strips off excessive inserted zeros. The data stream is passed through a PID decoder and checker to identify different PID's. The SIE block handles the protocol according to the type of PID and the endpoint to which the current transaction is addressed. If it is a data PID, the serial data is assembled into byte format and the received data is CRC is checked, then put into a one-byte buffer. The protocol layer takes the data from the buffer and forwards it to the Interface Bridge. On control transfers to endpoint 0, the protocol layer forwards the transfers to the endpoint block. If the application violates the data transfer protocol during the transfer of data from the buffer to the application bus, the protocol layer controls the SIE to recover from this error.

1.3.2 Interface Bridge and Endpoint Buffers

These act as the interface between the 8051 micro controller and the USB device controller. The USB endpoint buffers are memory mapped on the 8051 XDATA bus. A simple buffer scheme is employed, which assigns a single/ping-pong buffer to each USB endpoint for ease of software control. Each buffer must be cleared before the next data transfer can be started.

When USB OUT data is received, it is placed into the appropriate OUT endpoint buffer and the 8051 is signaled with an interrupt (polling is also available)

When an IN request is received, the 8051 is signaled with an interrupt and the 8051 will transfer data to the appropriate IN endpoint buffer and set a ready flag. The data will automatically be encoded for transfer over the USB bus.

1.4 Power Management Unit

The programmable clock divider supports division of the 48 MHz main clock. Additionally it enables power down under program or hardware control. Exit from power down is accomplished through a single input pin. The power management methods employed will enable a USB Suspend current of 200 µA typical (400 µA typical including Rpu current). In STOP Mode, 1 µA is the maximum current for a bare bones design.

Chapter 2 Block Diagrams

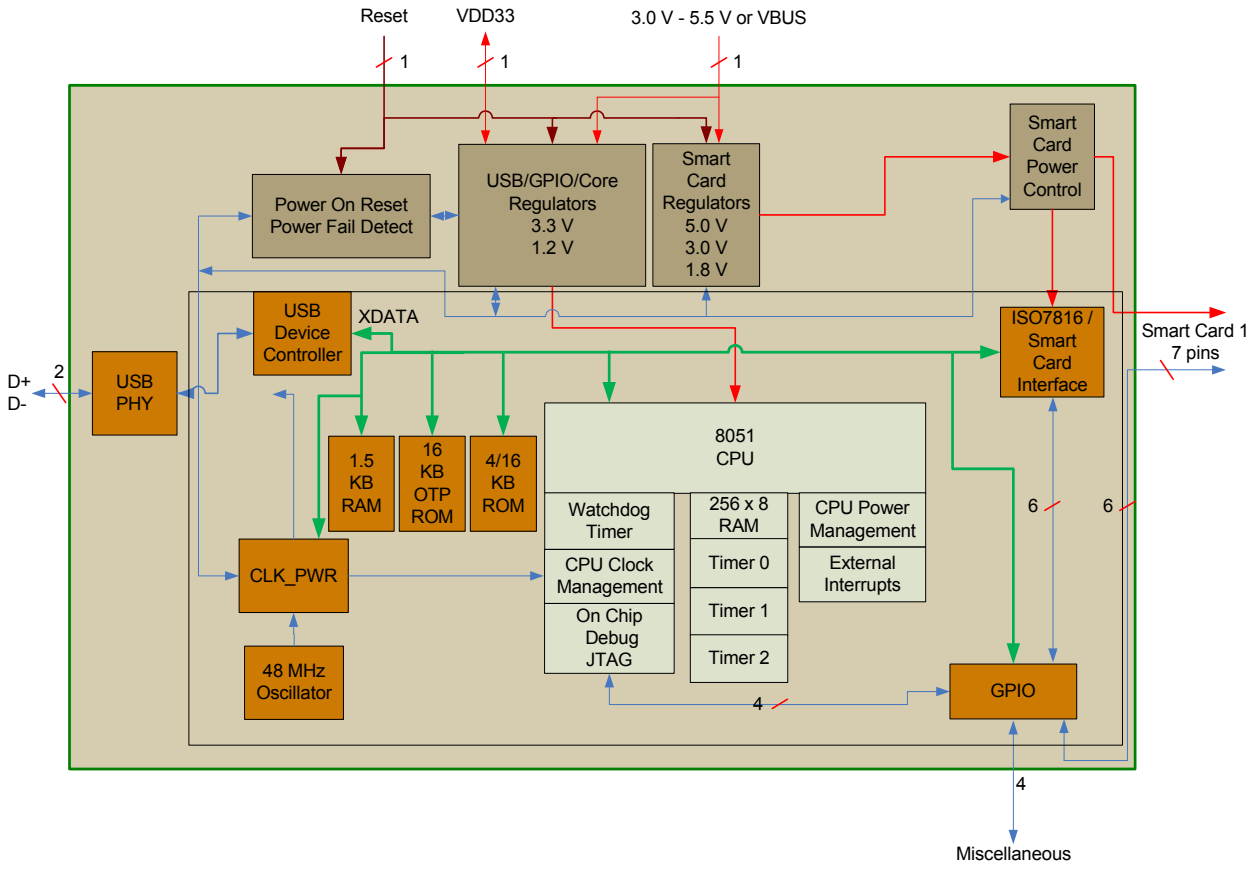

Figure 2.1 SEC1110 Block Diagram

© 2013 Microchip Technology Inc.

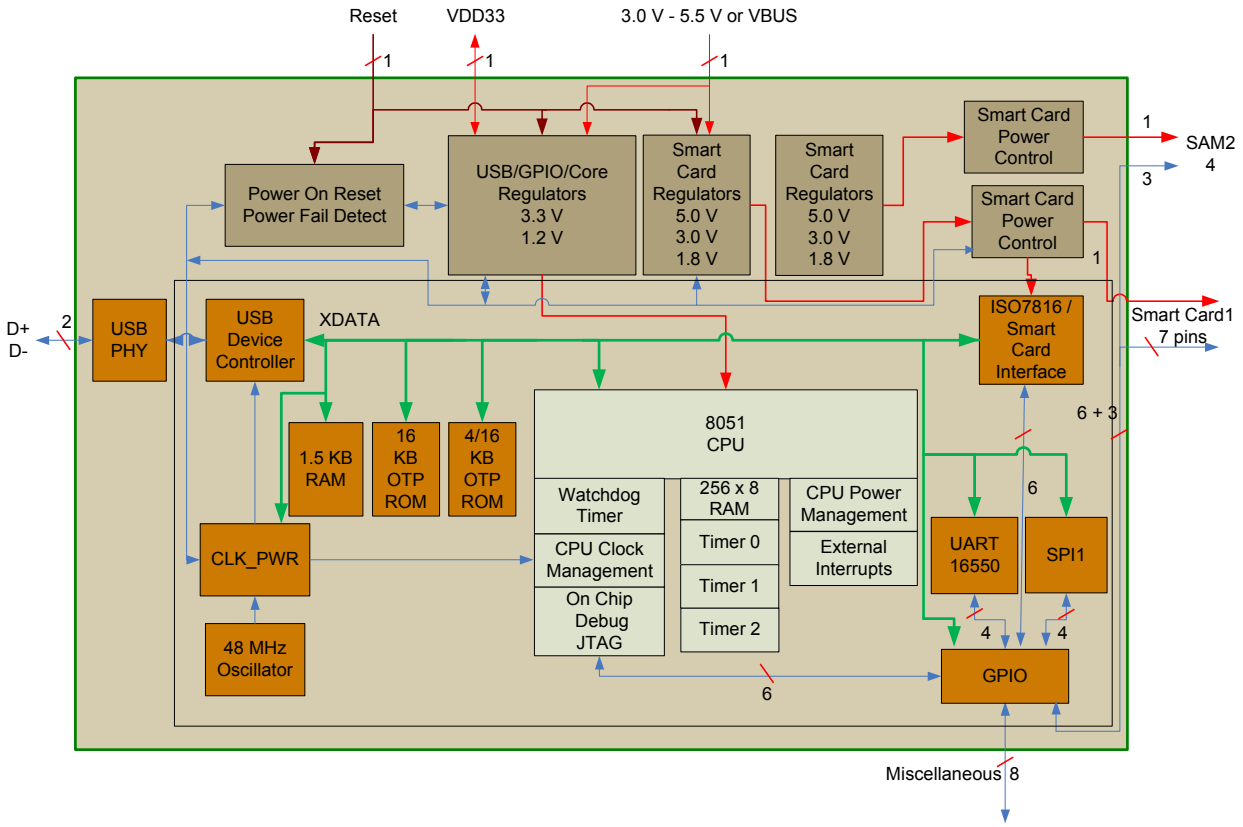

Figure 2.2 SEC1210 Block Diagram

Chapter 3 Pin Table

3.1 SEC1110 16-Pin QFN

Table 3.1 SEC1110 16-Pin Package

SMART CARD (7 PINS)			
SC1_VCC	SC1_RST_N	SC1_CLK	SC1_IO
SC1_C8	SC1_PRSNT_N/ JTAG_TMS	SC1_C4	
USB INTERFACE (2 PINS)			
USB_DP	USB_DM		
MISC (5 PINS)			
RESET_N	SC_LED_ACT_N/ JTAG_TDO	TEST	JTAG_CLK
JTAG_TDI			
DIGITAL, POWER (2 PINS)			
VDD33	VDD5		
TOTAL 16 (VSS - THERMAL SLUG)			

3.2 SEC1210 24-Pin QFN

Table 3.2 SEC1210 24-Pin Package

SMART CARD (7 PINS)			
SC1_VCC	SC1_RST_N	SC1_CLK	SC1_IO
SC1_C8	SC1_PRSNT_N/ JTAG_TMS	SC1_C4	
SMART CARD 2/SECURITY AUTHENTICATION MODULE (5 PINS)			
SC2_VCC	SC2_RST_N	SC2_CLK	SC2_IO
SC2_PRSNT_N/ JTAG_TDI			
USB INTERFACE (2 PINS)			
USB_DP	USB_DM		

© 2013 Microchip Technology Inc.

Table 3.2 SEC1210 24-Pin Package

SPI1/UART (4 PINS)			
SPI1_MISO/RXD	SPI1_MOSI/TXD	SPI1_CLK/CTS_OUT	SPI1_CE/RTS_IN
MISC (4 PINS)			
RESET_N	SC_LED_ACT_N/ JTAG_TDO	TEST	JTAG_CLK
DIGITAL, POWER (2 PINS)			
VDD33	VDD5		
TOTAL 24 (VSS - THERMAL SLUG)			

Note: The NC pins are “No Connects”. There are no NC pads in the Known Good Die (KGD).

Chapter 4 Pin Configurations

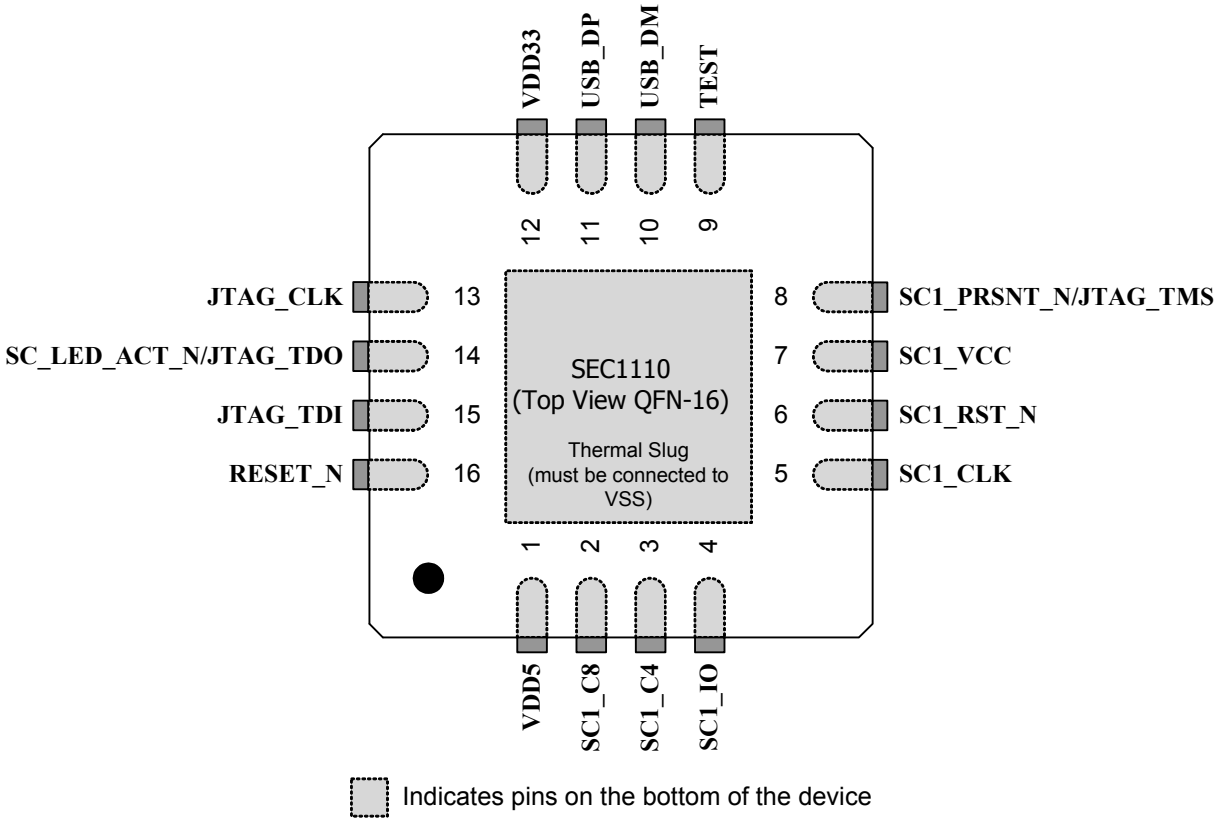

Figure 4.1 SEC1110 16-Pin QFN Package

© 2013 Microchip Technology Inc.

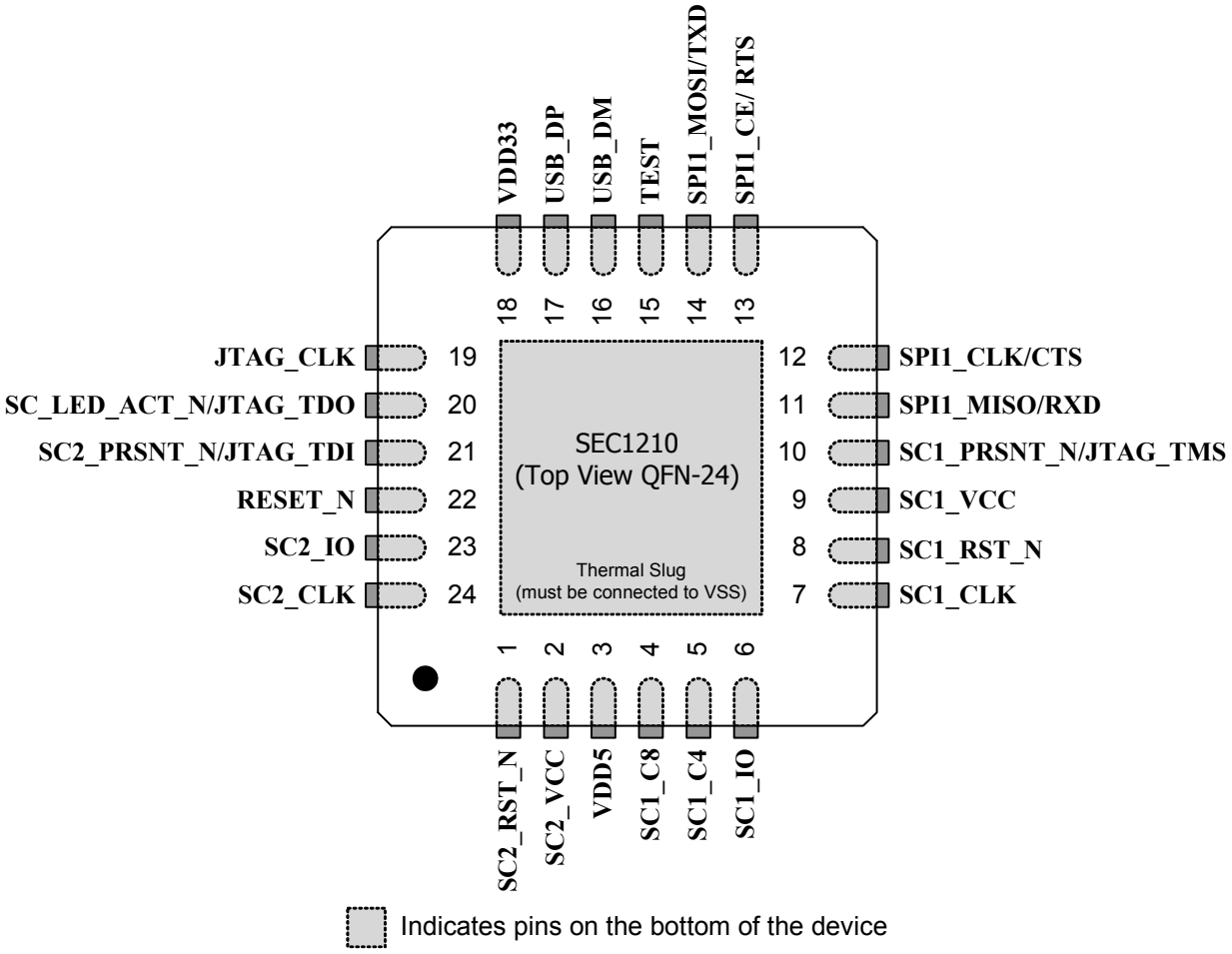

Figure 4.2 SEC1210 24-Pin QFN Package

Chapter 5 Pin Descriptions

This section provides a detailed description of each signal. The signals are arranged in functional groups according to their associated interface.

An *N* at the end of a signal name indicates that the active (asserted) state occurs when the signal is at a low voltage level. When the *N* is not present, the signal is asserted when it is at a high voltage level. The terms assertion and negation are used exclusively in order to avoid confusion when working with a mixture of active low and active high signals. The term assert, or assertion, indicates that a signal is active, independent of whether that level is represented by a high or low voltage. The term negate, or negation, indicates that a signal is inactive.

5.1 SEC1110 and SEC1210 Pin Descriptions

Table 5.1 SEC1110 and SEC1210 Pin Descriptions

NAME	SYMBOL	BUFFER TYPE	DESCRIPTION
SMART CARD INTERFACE			
SC Reset Output	SC1_RST_N/ GPIO2	Note 5.1	**SC1_RST_N**, **SC2_RST_N**: A low pulse resets the card and triggers an “answer to reset” (ATR) response message. This pin should be held low when the interface is not active.
	SC2_RST_N/ GPIO18		**GPIO2**, **GPIO18**: These pins may alternatively be configured as a general purpose I/O pins.
SC Clock Output	SC1_CLK/ GPIO1	Note 5.1	**SC1_CLK**, **SC2_CLK**: The clock reference for communication with the flash media card. This pin should be held low when the interface is not active.
	SC2_CLK/ GPIO17		**GPIO1**, **GPIO17**: These pins may alternatively be configured as general purpose I/O pins.
SC Data I/O	SC1_IO/ GPIO0	Note 5.1	**SC1_IO**, **SC2_IO**: The bidirectional serial data pin, which should be held low when the interface is not active.
	SC2_IO/ GPIO16		**GPIO0**, **GPIO16**: These pins may alternatively be configured as general purpose I/O pins.
SC Voltage for Card	SC1_VCC/ SC2_VCC		The voltage supply pin, where the output of the pin can be set to 1.8, 3.0, or 5.0 volts, depending on the type of Smart Card detected. These pins require an external1 µF capacitor. The same voltage must be applied to power **SCx_RST#**, **SCx_CLK**, **SCx_IO**, **SCx_C4**, and **SCx_C8** pins as digital inputs.
SC Standard or Proprietary Use Contact	SC1_C8 (SC1_SPU)/ GPIO4	Note 5.1	**SC1_C8**, **SC1_SPU**: These pins can be used for either standard or proprietary use as an input and/or output.
			This pin can alternatively be used as general purpose I/O pin.

© 2013 Microchip Technology Inc.

Table 5.1 SEC1110 and SEC1210 Pin Descriptions (continued)

NAME	SYMBOL	BUFFER TYPE	DESCRIPTION
SC Present	SC1_PRSNT_N/ JTAG_TMS/ TIMER0_IN/ GPIO6	I/O8PUD	**SC1_PRSNT_N**, **SC2_PRSNT_N**: Active-low signals used to detect the Smart Card device. These pins have an internal pull-up which can be activated by software to detect the Smart Card device.
	SC2_PRSNT_N/ JTAG_TDI/ GPIO19		**JTAG_TMS**, **JTAG_TDI**: These pins can alternatively be configured in debug mode by software.
			GPIO6, **GPIO19**: These pins can alternatively be used as general purpose I/O pins, or as the Timer 0 input pin.
SC1_FCB	SC1_C4 (SC1_FCB)/	Note 5.1	**SC1_C4**: This pin is to attach to C4 of the Smart Card for cards that support Function Code.
	GPIO3		**GPIO3**: This pin may alternatively be configured as a general purpose I/O pin.
SC Active Indicator	SC_LED_ACT_N/	I/O8PUD	The driver for the active LED.
	JTAG_TDO/		This pin can alternatively be configured in debug mode by software.
	TIMER2_T2EX/ GPIO5		This pin may alternatively be used as general purpose I/O pin, or as the Timer 2 “t2ex” input pin.
USB INTERFACE			
USB Bus Data	USB_DM, USB_DP	I/O-U	These pins connect to the upstream USB bus data signals.
SPI1/UART INTERFACE (QFN24, QFN48)			
SPI1 Chip Enable	SPI1_CE_N/	I/O8PUD	The active-low chip-enable output (Master mode) or input (Slave mode). If the SPI1 interface is disabled, this pin must be driven high in idle state by software.
	RTS/		This pin can alternatively function as the UART RTS signal, when UART is used instead of SPI1.
	GPIO11		This pin may also be used as a general purpose I/O pin.
SPI1 Clock	SPI1_CLK/	I/O8PUD	The SPI1 clock output (Master mode) or clock input (Slave mode).
	CTS/		This pin can alternatively function as the UART CTS signal, when UART is used instead of SPI1.
	GPIO10		This pin can alternatively be used as a general purpose I/O pin.
SPI1 Data In	SPI_MISO/	I/O8PUD	The Master data in to the controller or the Slave data out. This pin must have a weak internal pull-down applied at all times to prevent floating.
	RXD/		This pin alternatively function as the UART RXD input signal, when UART is used instead of SPI1.
	GPIO8		This pin can alternatively be configured as a general purpose I/O pin.

Table 5.1 SEC1110 and SEC1210 Pin Descriptions (continued)

NAME	SYMBOL	BUFFER TYPE	DESCRIPTION
SPI1 Data Out	SPI_MOSI/	I/O8PUD	This is the Master data output from the controller or Slave data in pin. This pin must have a weak internal pull-down applied when used as input to prevent floating.
	TXD/		This pin can alternatively function as the UART TXD output signal, when UART is used instead of SPI1.
	GPIO9		GPIO9: This pin can alternatively be used as a general purpose I/O pin.
SPI2/ GPIO PINS (QFN48)			
SPI2 Master Input	SPI2_MI/	I/O8PUD	The SPI2 Master Input
	GPIO12		This pin may also be used as a GPIO pin.
SPI2 Master Output	SPI2_MO/	I/O8PUD	The SPI2 Master Output
	GPIO13		This pin may also be used as a GPIO pin.
SPI2 Master Clock	SPI2_CLK/	I/O8PUD	The SPI2 Master Clock Output
	GPIO14		This pin may also be used as a GPIO pin.
SPI2 Master Chip Enable	SPI2_CE_N/	I/O8PUD	This active low pin is used as the SPI2 Master Chip Enable Output.
	GPIO15		This pin may also be used as a GPIO pin.
MISC			
TEST	TEST	I/O8PUD	This signal is used for testing the chip. If the test function is not used, this pin must be tied low externally.
RESET input	RESET_N	IS	This active low signal is used by the system to reset the chip and enter STOP mode. The active low pulse should be at least 1 µs wide. This pin is an analog input signal with Vil=100 mV.
JTAG Clock	JTAG_CLK	I/O8PUD	This input pad is used for JTAG debugging and has a weak pull down. It can be left floating or grounded when not used. If the JTAG is connected, this signal will be detected high, and the software disables the pull-up after reset.
JTAG Mode Select	PJTAG_TMS/	I/O8PUD	This pin is used as the 8051 JTAG Mode Select input pin, when JTAG is enabled in QFN48 package.
	GPIO28		This pin may also be used as a GPIO input only pin.
JTAG Data Input	PJTAG_TDI/	I/O8PUD	This pin is used as the 8051 JTAG Data input pin, when JTAG is enabled in QFN48 package.
	GPIO29		This pin may also be used as a GPIO only pin.
JTAG Data Output	PJTAG_TDO/	I/O8PUD	This pin is used as the 8051 JTAG Data output pin, when JTAG is enabled in QFN48 package.
	GPIO30		This pin may also be used as a GPIO output only pin.

© 2013 Microchip Technology Inc.

Table 5.1 SEC1110 and SEC1210 Pin Descriptions (continued)

NAME	SYMBOL	BUFFER TYPE	DESCRIPTION
BOND0	BOND0	I/O8PUD	These pins indicate the package type as QFN16, QFN24, QFN48.
BOND1	BOND1	I/O8PUD	
BOND2	BOND2	I/O8PUD	This pin when high indicates that the CPU boots (address 0x0) from external SPI2 interface. This pin when low indicates that the CPU boots from internal boot ROM or OTP ROM.
BOND3	BOND3	I/O8PUD	This GPIO pin is unused.
PCLK_IN_48MHZ	PCLK_IN_48MHZ/ GPIO23	I/O8PUD	This pin is used in QFN48 package as an input from an external oscillator.
PCLK_ENABLE	PCLK_ENABLE/ GPIO20/ TIMER2_CC_IN3/ TIMER2_CC_OUT3	I/O8PUD	This pin is used in QFN48 package as an enable input for PCLK_IN_48MHZ.
DIGITAL / POWER / GROUND			
VBUS 5V Power	VDD5		5.0 V (or VBUS) power input.
3.3V Analog Power Output	VDD33		3.3 V analog power output for decoupling capacitor. This pad requires an external 1 µF capacitor.
Ground	VSS		Ground reference

Note: All pins OTP_VPP_MON, OTP_VREF, OTP_VREFA, OTP_VREF_SA are NC's.

Note 5.1 This pin has a unique function, detailed in Chapter 19, "DC Parameters," on page 235.

5.2 Buffer Type Descriptions

Table 5.2 SEC1110 and SEC1210 Buffer Type Descriptions

BUFFER TYPE	DESCRIPTION
I	Input
IPU	Input with weak internal pull-up resistor
IS	Input with Schmitt trigger
I/O12	Input/output buffer with 12 mA sink and 12 mA source
I/O8PD	Input/output buffer with 8 mA sink and 8 mA source, with an internal weak pull-down resistor
I/O8PU	Input/output buffer with 8 mA sink and 8 mA source with an internal weak pull-up resistor
I/O8PUPD	Input/output buffer with 8 mA sink and 8 mA source, with a selectable pull-up and pull-down resistors
I/OD8PU	Input/open drain output buffer with a 8 mA sink
I/O12PD	Input/output buffer with 12 mA sink and 12 mA source, with an internal weak pull-down resistor
I/O12PU	Input/output buffer with 12 mA sink and 12 mA source with an internal weak pull-up resistor
I/O12PUPD	Input/output buffer with 12 mA sink and 12 mA source, with a selectable pull-up and pull-down resistors
I/OD12PU	Input/open drain output buffer with a 12 mA sink
O12	Output buffer with a 12 mA sink and a 12 mA source
O12PD	Output buffer with 12 mA sink and 12 mA source, with a pull-down resistor
O12PU	Output buffer with 12 mA sink and 12 mA source, with a pull-up resistor
ICLKx	XTAL clock input
OCLKx	XTAL clock output
I/O-U	Analog input/output defined in USB specification
I-R	RBIAS

© 2013 Microchip Technology Inc.

Chapter 6 Pin Reset States

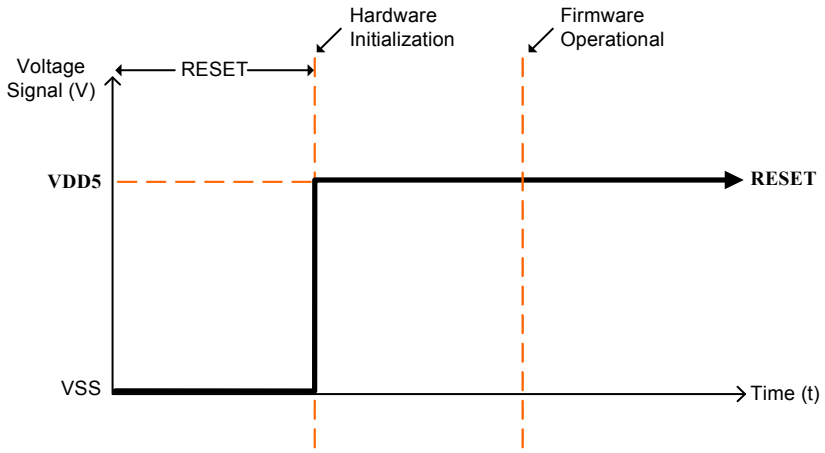

Figure 6.1 Pin Reset States

Table 6.1 Legend for Pin Reset States Table

SYMBOL	DESCRIPTION
Y	Hardware enables function
0	Output low
1	Output high
--	Hardware disables function
Z	Hardware disables output driver (high impedance)
PU	Hardware enables pull-up
PD	Hardware enables pull-down
HW	Hardware controls function, but state is protocol dependent
(FW)	Firmware controls function through registers
VDD	Hardware supplies power through pin, applicable only to CARD_PWR pins
none	Hardware disables pad

Table 6.2 SEC1110 QFN 16-Pin Reset States

		RESET STATE			
PIN	**PIN NAME**	**FUNCTION**	**OUTPUT**	**PU/ PD**	**INPUT**
1	VDD5	5.0 V supply			ANALOG
2	SC1_C8	Smart Card1 C8 pin	Z		
3	SC1_C4	Smart Card1 C4 pin	Z		
4	SC1_IO	Smart Card1 IO pin	Z		
5	SC1_CLK	Smart Card1 CLK pin	Z		
6	SC1_RST_N	Smart Card1 RST_N pin	Z		
7	SC1_VCC	Smart Card1 Power supply output 5.0V/3.3V/1.8V	Note 6.1 Note 6.2		ANALOG
8	SC1_PRSNT_N/JTAG_TMS	GPIO input for Smart Card1 presence detect.	Z		
9	TEST	Test mode pin	Z	**PD** Note 6.8	Yes Note 6.6
10	USB_DM	USB D-	Z		
11	USB_DP	USB D+	Z		
12	VDD33	3.3 V power supply output	Note 6.3		ANALOG
13	JTAG_CLK	JTAG clock pin	Z	**PD** Note 6.4	Yes Note 6.6
14	SC_LED_ACT_N/JTAG_TDO	GPIO output for Smart Card1 LED	Z		
15	JTAG_TDI	JTAG data in pin	Z	**PD** Note 6.8	Yes Note 6.6
16	RESET_N	Reset input	Z		ANALOG Note 6.5
-	VSS	Package ground			ANALOG

Table 6.3 SEC1210 QFN 24-Pin Reset States

		RESET STATE			
PIN	**PIN NAME**	**FUNCTION**	**OUTPUT**	**PU/ PD**	**INPUT**
1	SC2_RST_N	Smart Card2 RST_N pin	Z		
2	SC2_VCC	Smart Card2 power supply output 5.0V/3.3V/1.8V	Note 6.1 Note 6.2		ANALOG
3	VDD5	5.0 V supply			ANALOG
4	SC1_C8	Smart Card1 C8 pin	Z		
5	SC1_C4	Smart Card1 C4 pin	Z		

© 2013 Microchip Technology Inc.

Table 6.3 SEC1210 QFN 24-Pin Reset States

		RESET STATE			
PIN	**PIN NAME**	**FUNCTION**	**OUTPUT**	**PU/ PD**	**INPUT**
6	SC1_IO	Smart Card1 IO pin	Z		
7	SC1_CLK	Smart Card1 CLK pin	Z		
8	SC1_RST_N	Smart Card1 RST_N pin	Z		
9	SC1_VCC	Smart Card1 Power supply output 5.0V/3.3V/1.8V	Note 6.1 Note 6.2		ANALOG
10	SC1_PRSNT_N/JTAG_TMS	GPIO input for Smart Card1 presence detect.	Z		
11	SPI1_MISO/RXD	GPIO pin for SPI1 data	Z		
12	SPI1_CLK/CTS	GPIO pin for SPI1 clock	Z		
13	SPI1_CE/RTS	GPIO pin for SPI1 chip enable	Z		
14	SPI1_MOSI/TXD	GPIO pin for SPI1 data	Z		
15	TEST	Test mode pin	Z	**PD** Note 6.8	Yes Note 6.6
16	USB_DM	USB D-	Z		
17	USB_DP	USB D+	Z		
18	VDD33		Note 6.3		ANALOG
19	JTAG_CLK	JTAG clock pin	Z	**PD** Note 6.8	Yes Note 6.6
20	SC_LED_ACT_N/JTAG_TDO	GPIO output for Smart Card1 LED	Z		
21	SC2+PRSNT_N/JTAG_TDI	GPIO input for Smart Card1 presence detect.	Z	**PD** Note 6.8	Yes Note 6.6
22	RESET_N	Reset input	Z		ANALOG Note 6.5
23	SC2_IO	Smart Card2 IO pin	Z		
24	SC2_CLK	Smart Card2 CLK pin	Z		
-	VSS	Package ground			ANALOG

Note 6.1 The Smart Card1 and Smart Card2 power supply output is powered down at reset state.

Note 6.2 The Smart Card1 and Smart Card2 power supply output requires an external 1.0 µF capacitor.

Note 6.3 Internal voltage regulator output for USB, GPIO 3.3 V IO Supply. This pin requires an external 1.0 µF capacitor.

Note 6.4 A weak pull down is present on the **TEST**, **JTAG_CLK**, and **JTAG_TDI** pads. If JTAG is connected, and this pad is pulled high, then the reset state of the pins 8 (**JTAG_TMS**), 13(**JTAG_CLK**), 14(**JTAG_TDO**), and 15(**JTAG_TDI**) functions in JTAG Mode. The weak pull-down can be disabled after reset release by software.

Note 6.5 **RESET_N** is an analog input, which when low, powers down all internal voltage regulators and the pads are in high impedance state. The pads function as input, including pull-ups pull-downs functionality after internal 3.3V power (VDD33) is good.

Note 6.6 The **TEST**, **JTAG_CLK**, and **JTAG_TDI/GPIO[19]** values at internal power on reset release (after **RESET_N** release) is captured in the chip to enter various functional or test modes.

Note 6.7 Smart Card2 power supply output is powered down at reset state.

Note 6.8 A weak pull-down is present on **TEST**, **JTAG_CLK**, and **JTAG_TDI** pads if JTAG is connected, and this pad is pulled high. The reset state of the pins 10(**JTAG_TMS**), 19(**JTAG_CLK**), 20(**JTAG_TDO**), and 21(**JTAG_TDI**) function in JTAG Mode. The weak pull-down can be disabled after reset release by software.

Note 6.9

Note 6.10 The LCD regulator LDO4 and Smart Card2 output is powered down at reset state.

© 2013 Microchip Technology Inc.

Chapter 7 8051 Embedded Controller

The embedded controller used in the SEC1110 and SEC1210 is an R8051XC2 from Evatronix. The R8051XC2 is a high performance 8-bit embedded processor. The processor core is a low gate count core, with low-latency interrupt processing that features:

- Single clock per machine cycle: an average of 2.12 machine cycles per instruction
- Industry standard MCS51 instruction set
- Dual Data Pointers (2 x DPTR)

The R8051XC2's interrupt controller is closely integrated with the processor core to achieve low latency interrupt processing, incorporating the following features:

- 13 external interrupts
- 4 priority levels for each interrupt

The embedded controller provides low-cost debug solutions, including:

- JTAG port for debugging using EASE OCDS debugging
- Software and 4 hardware breakpoints

The R8051XC2 bus interfaces include:

- 256 bytes internal data memory RAM
- Program Memory Write Mode
- Supports 128 KB program memory space with banking
- Supports 128 KB of external data memory space with banking

.

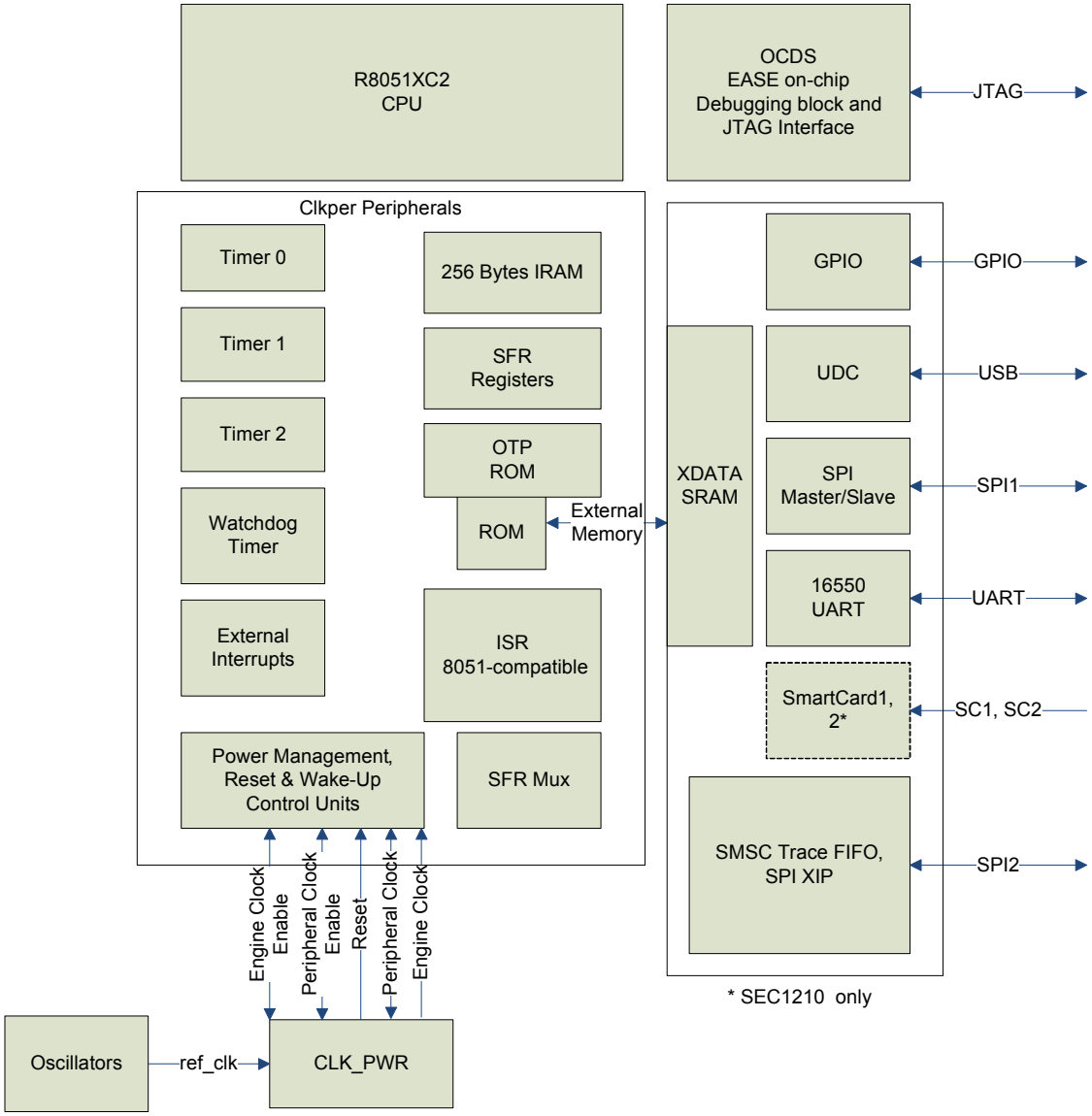

Figure 7.1 R8051XC2 Block Diagram

7.1 Sleep/Power Management

The R8051XC2 has a power management control unit that generates clock enable signals for the main CPU and for peripherals; serves Power Down Modes IDLE and STOP; and generates an internal synchronous reset signal (upon external reset, watchdog timer overflow, or software reset condition). The IDLE Mode leaves the clock of the internal peripherals running. Any interrupt will wake the CPU.

The STOP Mode turns off all internal clocks. The CPU will exit this state when an external interrupt (0 or 1)or reset occurs and internally generated interrupts are disabled since they require clock activity.

The Wake-up From Power-Down Mode control unit services two external interrupts during power-down modes. They can combinationally force the clock enable outputs back to active state so the clock generation can be resumed.

7.1.1 EC Data Memory

The EC has 1.5 KB data memory that is accessed through the XDATA Bus which is implemented with static RAM and organized as 1.5 K x 8 bits. The base address of the memory is 8000h in the EC address space and extends to location 85FFh.

© 2013 Microchip Technology Inc.

7.1.2 EC OTP Instruction Memory

The primary instruction memory for the EC is a 16 K x 8 bit OTP ROM memory, located at locations 0000h through 3FFFh in the EC address space. There is also a 4 K x 8 bit ROM that is used to overlay the OTP memory when it has not been programmed. A bit in the OTP disables the ROM overlay. The OTP memory is also mapped into the XDATA space when the overlay is active so that the CPU can program the OTP from the USB bus.

7.2 EC Registers

Table 7.1 Code Execution Truth Table

OTP_CFG.FORCE_OTP_ROM	OTP_CFG.OTP_ROM_EN	EXT_SPI_EN/ BOND[2]	CODE EXECUTION
0	X	1	External SPI2
0	0	0	ROM
0	1	0	OTP
1	X	X	OTP

The truth table indicates which memory is mapped into the 8051 CODE space depending on the three signals ROM_EN, defined in the OTP_CFG Register. OTP_ROM_EN, and the EXT_SPI_EN (**BOND2** bond option).

7.3 EC Memory Map

Table 7.2 CODE SPACE

NAME	ADDRESS RANGE
INTERNAL ROM (4 K) (SEC1110 and SEC1210) INTERNAL ROM (16 K) (later versions)	0000h-0FFFh C000h-CFFFh (alias address range) (deprecated) 18000h-18FFFh (alias address range) 1A000h-1DFFFh (alias address range) (later versions)
OTP ROM (16 K)	0000h-3FFFh
EXTERNAL SPI	0000-FFFFh
SRAM (1.5 K)	19000h-195FFh (alias address range)

Table 7.3 XDATA SPACE RANGES

NAME	ADDRESS RANGE
OTP ROM (Note 7.1)	0000h-7FFFh
SRAM (1.5 K)	8000h-85FFh
Smart Card1,2	9000h-93FFh
UART	9500h-95FFh
USB DEVICE CONTROLLER	9600h-96FFh
SPI2 CODE MASTER	9A00h-9A18h
GPIO	9C00h-9DFFh
CLK_PWR	A000h-A3FFh
OTP_TEST	A400h-A7FFh
SPI2 CODE MASTER (TRACE FIFO)	BFFEh-BFFFh
INTERNAL ROM (4 K) (SEC1110 and SEC1210) INTERNAL ROM (16 K) (later versions)	C000h-CFFFh (alias address range) (deprecated) 18000h-18FFFh (alias address range) 1A000h-1DFFFh (alias address range) (later versions)

Note 7.1 OTP ROM is only visible in the XDATA space if the Internal ROM is enabled (see Table 7.1).

There is 128 KB of program space available. The lower 32 KB always is mapped to 0000-7FFFh. The higher ranges 32 KB to 128 KB are accessed through a window at 8000h-FFFFh using the pagesel registers.The ROM and SRAM are also mapped to address at 96 KB. This enables access to ROM code while executing from OTP_ROM. This also enables downloading code to SRAM and executing for test modes.

Table 7.4 CPU Boot address mapping

CPU CODE MAPPED ADDRESS[15:0]	CPU UNMAPPED ADDRESS[16:0]			COMMENT
	INTERNAL ROM BOOTING	INTERNAL OTP_ROM BOOTING	EXTERNAL SPI BOOTING	
	FORCE_OTP_ROM =0 OTP_ROM_EN=0	(FORCE_OTP_ROM=1) | (EXT_SPI_EN=0 & OTP_ROM_EN=1)	FORCE_OTP_ROM =0 & EXT_SPI_EN=1	
00000h-7FFFh	ROM= 00000h-00FFFh	OTP_ROM_16K= 00000h-03FFFh	EXT_SPI= 00000h-07FFFh	If size of internal ROM/ OTP_ROM/ External SPI is less than 32KB, then rest of the region is reserved. pagesel[2:0]=000 must not be used.

© 2013 Microchip Technology Inc.

CPU CODE MAPPED ADDRESS[15:0]	CPU UNMAPPED ADDRESS[16:0]			COMMENT
8000h-FFFFh		Reserved= (OTP_ROM_16K) 08000h-0FFFFh	EXT_SPI= 08000h-07FFFh	pagesel[1:0]=01 Upper 32K of ROM/OTP_ROM/EXT_SPI code execution
8000h-FFFFh				pagesel[1:0]=10 32KB OTP_ROM code execution
8000h-FFFFh	Reserved= 18000h-1FFFFh	ROM= 18000h-18FFFh	ROM= 18000h-18FFFh	pagesel[1:0]=11 SRAM code execution
	SRAM_1.5K= 19000h-195FFh	SRAM_1.5K= 19000h-195FFh	SRAM_1.5K= 19000h-195FFh	
	Reserved= (SRAM_1.5K) 19600h-19FFFh	Reserved= (SRAM_1.5K) 19600h-19FFFh	Reserved= (SRAM_1.5K) 19600h-19FFFh	
	In SEC1110/SEC1210 ROM= 1A000h-1DFFFh else Reserved= 1A000h-1FFFFh	In SEC1110/SEC1210 ROM= 1A000h-1DFFFh else Reserved= 1A000h-1FFFFh	In SEC1110/SEC1210 ROM= 1A000h-1DFFFh else Reserved= 1A000h-1FFFFh	

Chapter 8 EC External Interrupts

8.1 General Description

The R8051XC2 is 80515-compatible and will be configured to support thirteen external interrupt sources and four priority levels. In addition, there are individual internal interrupt sources for the R8051XC2 configured peripherals such as the timers and SPI1 interfaces. Each source has its own request flag(s). Each interrupt requested by the corresponding flag can be individually enabled or disabled by dedicated enable bits in the SFRs.

8.2 Interrupt Summary

Table 8.1 Interrupt Vector Mapping

INTERRUPT INTPUT/ VECTOR	SOURCE	DESCRIPTION
int_vect_03	ie0	External Interrupt 0 - all interrupts ORed except GPIOs In SEC1110/SEC1210 version, the SPI1, Power Status interrupts will not cause an ie0 interrupt.
int_vect_0B	t0_f0	Timer 0 overflow
int_vect_13	ie1	External Interrupt 1 - GPIO Port 0,1,2 interrupts
int_vect_1B	tf1_gate	Timer 1 overflow
int_vect_23	uart_int	Serial Port 0 Interrupt
int_vect_2B	unused	Reserved
int_vect_43	iex7_gate	External Interrupt 7 - Reserved
int_vect_4B	iex2_gate	External Interrupt 2 - SPI1 Interrupt
int_vect_53	EP3INT	External Interrupt 3 - Endpoint 3 Interrupt. Also is active for Timer2 crc/cc0 comparator output.
int_vect_5B	EP4INT	External Interrupt 4 - Endpoint 4 Interrupt. Also is active for Timer2 cc1 comparator output.
int_vect_63	USB_INT_REG	External Interrupt 5 - USB Interrupt. Also is active for Timer2 cc2 comparator output. In SEC1110/SEC1210, the Timer2 cc2 comparator output will not cause an interrupt.
int_vect_6B	POWER_STS	External Interrupt 6 - Power status event. Also is active for Timer2 cc3 comparator output. In SEC1110/SEC1210, the Timer2 cc3 comparator output will not cause an interrupt.
int_vect_83	unused	External Interrupt -Reserved
int_vect_8B	EP1INT	External Interrupt 8 - Endpoint 1 Interrupt
int_vect_93	EP2INT	External Interrupt 9 - Endpoint 2 Interrupt
int_vect_9B	EP5INT	External Interrupt 10 - Endpoint 5 Interrupt
int_vect_A3	EP0INT	External Interrupt 11 - Endpoint 0 Interrupt

© 2013 Microchip Technology Inc.

Table 8.1 Interrupt Vector Mapping

INTERRUPT INTPUT/ VECTOR	SOURCE	DESCRIPTION
int_vect_AB	iex12	External Interrupt 12 - Smart Card1 and Smart Card2 Interrupt

Note: In SEC1110/SEC1210 version, External Interrupts 4, 5, and 6 are not active when TImer2 comparator outputs for cc1, cc2, and cc3 respectively are active. This *Anomaly 24* is fixed in later versions.

8.3 EC ISR

The Interrupt Service Routine (ISR) unit, is a subcomponent responsible for interrupt handling. It receives up to 19 interrupt requests. Each of the interrupt sources can be individually enabled or disabled by the corresponding enable flag in the ien0, ien1, ien2, and ien4 SFR registers. Additionally all interrupts can be globally enabled or disabled by the ea flag in the ien0 Special Function Register.

All interrupt sources are divided into 6 interrupts groups. The definition of each group is shown in Table 8.2.

Table 8.2 Interrupt Priority Groups

	HIGHEST PRIORITY IN GROUP						LOWEST PRIORITY IN GROUP	
GROUP	INTERRUPT VECTOR	INTERRUPT ENABLE BIT NAME(BIT)	INTERRUPT VECTOR	INTERRUPT ENABLE BIT	INTERRUPT VECTOR	INTERRUPT ENABLE BIT	INTERRUPT VECTOR	INTERRUPT ENABLE BIT
Group0	int_vect_03 (External Interrupt 0 - all interrupts ORed except GPIOs)	ien0(0)	int_vect_83 (unused)	ien2(0)			int_vect_43 (External Interrupt 7 - reserved)	ien1(0)
Group1	int_vect_0B (Timer 0 Interrupt)	ien0(1)	int_vect_8B (External Interrupt 8 - Endpoint 1)	ien2(1)			int_vect_4B (External Interrupt 2 - SPI1 Interrupt)	ien1(1)
Group2	int_vect_13 (External Interrupt 1 - GPIO 0,1,2)	ien0(2)	int_vect_93 (External Interrupt 9 - Endpoint 2)	ien2(2)			int_vect_53 (External Interrupt 3- Endpoint 3)	ien1(2)
Group3	int_vect_1B (Timer 1 Interrupt)	ien0(3)	int_vect_9B (External Interrupt 10 - Endpoint 5)	ien2(3)			int_vect_5B (External Interrupt 4- Endpoint 4)	ien1(3)
Group4	int_vect_23 (16550 UART Interrupt)	ien0(4)	int_vect_A3 (External Interrupt 11 - Endpoint 0)	ien2(4)			int_vect_63 (External Interrupt 5- USB Interrupt)	ien1(4)
Group5	int_vect_2B (Timer 2 Interrupt)	ien0(5)	int_vect_AB (External Interrupt 12 - Smart Card 1/2)	ien2(5)	int_vect_EB (reserved)	ien4(5)	int_vect_6B (External Interrupt 6 - Power Status Event)	ien1(5)

Inside a group, hardware dictates the interrupt priority structure. Interrupt sources from the first column have the highest priority, sources from second column have middle priority, and sources from last column have the lowest priority. The interrupt priority inside the group cannot be changed, where there is also an interrupt priority structure between the groups. Group0 has the highest priority and Group5 has the lowest. The priority between groups can be programmed by changing priority level (priority level can be set from 0 to 3) that is assigned to each group. The priority level of an interrupt group is defined by flags of the ip0 and ip1 SFRs. When the priority levels for two groups are programmed to the same level, the priority among them is in the order, from high to low (Group0 down to Group5).

To determine which interrupt has the highest priority (which must be serviced in the first order) the following steps are completed:

1. From all groups, those with the highest priority level are chosen.

 © 2013 Microchip Technology Inc.

2. From those with the highest priority level, the one with the highest natural priority between the groups in chosen.
3. From the group with highest priority, the interrupt with the highest priority inside the group is chosen.

The currently running interrupt service subroutine can be interrupted only by interrupts with a higher priority level. No interrupt with the same or lower priority level can interrupt the currently running interrupt service subroutine. Therefore there can be a maximum of four interrupts in service at the same time.

The ISR block inserts two CPU clock cycle delays between an interrupt request sent to the ISR and an interrupt request sent by ISR to the CPU. When the ISR sends an interrupt request to the CPU, it responds by executing an interrupt acknowledge cycle.

The interrupt vector table is located at 0000h, which is in the Internal ROM or OTP.

8.4 Wake-up Interrupt Source Register

The R8051XC2 controller contains a WAKEUP feature that allows either the EXT0 or EXT1 Interrupt to wake-up the processor from the STOP or IDLE Mode. Since the clocks to the processor will be stopped, the interrupt sources for EXT0 and EXT1 must be combinatorial. An additional register will provide masking for the available wake-up sources.

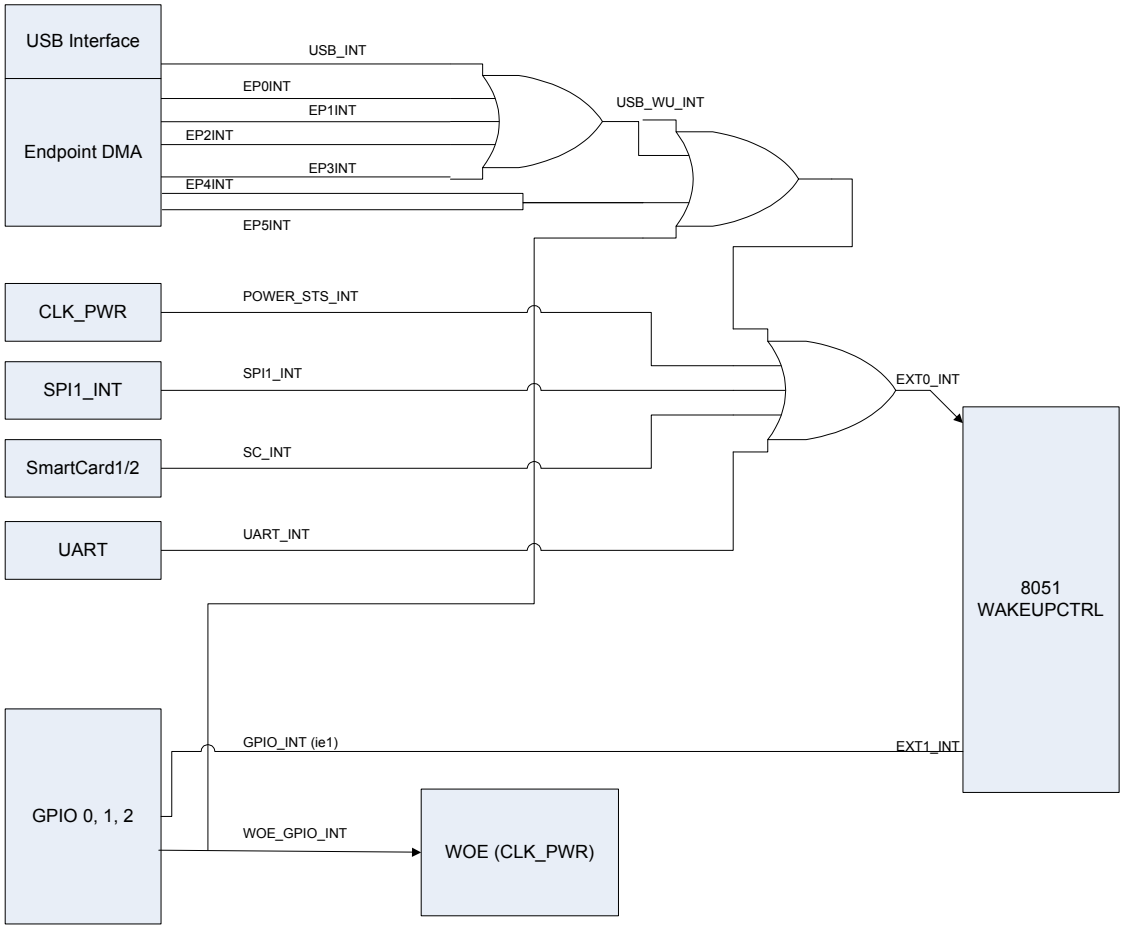

Figure 8.1 Wake-up Interrupt

If the interrupt is active and the corresponding bit in the Wakeup Enable Register is set, then the EXT0 Interrupt will be active. If in IDLE or STOP Mode, this will wakeup the 8051.

The External Interrupt 1 (EXT1_INT) is connected to GPIO (0,1,2) interrupts. For a GPIO interrupt to occur, the CPU clock must be active. The rest of the interrupt sources are ORed and connected to External Interrupt 0 (EXT0_INT), including WOE_GPIO_INT. Additionally, the wake on event GPIO interrupt can occur when the clocks are in Sleep Mode. Hence, the software can exit CPU_STOP Mode by any of the external interrupts.

In the SEC1110/SEC1210 version, the GPIO block runs off cpu_clk, and if the 8051 is in CPU_IDLE state, the GPIO debounce feature does not function, as cpu_clk is gated.

In subsequent revisions, if the **OSC48_SETTLE_CLKS.A1_COMPATIBILITY** bit is set, the GPIO block runs off cpu_per_clk. Hence if the 8051 is in CPU_IDLE state, the GPIO debounce feature functions normally.

© 2013 Microchip Technology Inc.

Chapter 9 8051 Special Function Registers

9.1 Special Function Registers Locations

The map of special function registers is shown below in Table 9.1. Some addresses are occupied, while others are not implemented. Read and write access to addresses that are not implemented will have no effect.

Table 9.1 Special Function Register Locations

HEX	0X0	0X1	0X2	0X3	0X4	0X5	0X6	0X7	HEX
F8									**FF**
F0	B							SRST	**F7**
E8									**EF**
E0	ACC	SPSTA	SPCON	SPDAT	SPSSN				**E7**
D8									**DF**
D0	PSW								**D7**
C8	T2CON		CRCL	CRCH	TL2	TH2			**CF**
C0		CCEN	CCL1	CCH1	CCL2	CCH2	CCL3	CCH3	**C7**
B8	IEN1	IP1							**BF**
B0									**B7**
A8	IEN0	IP0							**AF**
A0									**A7**
98			IEN2						**9F**
90			DPS	DPC	PAGESEL	D_PAGESEL			**97**
88	TCON	TMOD	TL0	TL1	TH0	TH1			**8F**
80		SP	DPL	DPH	DPL1	DPH1	WDTREL	PCON	**87**

Note: The boxes shaded regions are undefined registers.

9.1.1 Accumulator Register – ACC

The Accumulator Register is used by most of the R8051XC2 instructions to hold the operand and to store the result of an operation. The mnemonics for accumulator-specific instructions refer to accumulator as A, not ACC.

Table 9.2 ACC

ACC (SFR 0XE0 - RESET=0X00)			**ACCUMULATOR**
BIT	**NAME**	**R/W**	**DESCRIPTION**
7:0	A	R/W	Accumulator

9.1.2 B Register – B

Table 9.3 B Register

B (SFR 0XF0 - RESET=0X00)			**B**
BIT	**NAME**	**R/W**	**DESCRIPTION**
7:0	B	R/W	Used during multiplying and division instructions. It can also be used as a scratch-pad register to hold temporary data.

9.1.3 Program Status Word Register – PSW

The PSW Register contains status bits that reflect the current state of the CPU.

Note: The parity bit can only be modified by hardware by the state of ACC Register.

Table 9.4 Program Status Word Register

PSW (SFR 0XD0 - RESET=0X00)			**STACK POINTER**
BIT	**NAME**	**R/W**	**DESCRIPTION**
7	cy	R/W	Carry flag: The carry bit in arithmetic operations and the accumulator for Boolean operations.
6	ac	R/W	Auxiliary Carry Flag: Set if there is a carry-out from 3rd bit of the accumulator in BCD operations.
5	f0	R/W	General Purpose Flag 0: Available for general use.
4	rs1	R/W	Register Bank Select Control Bit 1: Used to select the working register bank.

© 2013 Microchip Technology Inc.

Table 9.4 Program Status Word Register (continued)

PSW (SFR 0XD0 - RESET=0X00)			STACK POINTER
BIT	**NAME**	**R/W**	**DESCRIPTION**
3	rs0	R/W	Register Bank Select Control Bit 0: Used to select the working register bank.
2	ov	R/W	Overflow Flag: Set in case of overflow in accumulator during arithmetic operations.
1	f1	R/W	General Purpose Flag 1: Available for general use.
0	p	R	Parity Flag: Reflects the number of 1s in the accumulator. `1` : If the accumulator contains an odd number of 1s `0` : If the accumulator contains an even number of 1s

The state of the **rs1** and **rs0** bits selects the working register bank as outlined in Table 9.5.

Table 9.5 Register Bank Locations

rs1	rs0	SELECTED REGISTER BANK	LOCATION
0	0	Bank 0	(00H – 07H)
0	1	Bank 1	(08H – 0FH)
1	0	Bank 2	(10H – 17H)
1	1	Bank 3	(18H – 1FH)

9.1.4 Stack Pointer Register – SP

Table 9.6 Stack Pointer Register

SP (SFR 0X81 - RESET=0X07)			STACK POINTER
BIT	**NAME**	**R/W**	**DESCRIPTION**
7:0	SP[7:0]	R/W	Clock Divide Low Byte: Points to the top of the stack in the internal data memory space.

The Stack Pointer Register is used to store the return address of a program before executing an interrupt routine or subprograms. The SP is incremented before executing a PUSH or CALL instruction, and it is decremented after executing a POP or RET(I) instruction (it always points the top of stack).

9.1.5 Data Pointer and Data Pointer 1 Registers – DPH, DPL and DPH1, DPL1

Table 9.7 Data Pointer(1) Low Register

DPL (SFR 0X82 - RESET=0X00) DPL1 (SFR 0X84 - RESET=0X00)			DATA POINTER LOW
BIT	**NAME**	**R/W**	**DESCRIPTION**
7:0	DPL[7:0]	R/W	Data Pointer Low Byte

Table 9.8 Data Pointer(1) High Register

DPH (SFR 0X83 - RESET=0X00) DPH1 (SFR 0X85 - RESET=0X00)			DATA POINTER HIGH
BIT	**NAME**	**R/W**	**DESCRIPTION**
7:0	DPH[7:0]	R/W	Data Pointer High Byte

One of two data pointer registers can be accessed through DPL and DPH. The actual Data Pointer is selected by the DPSEL Register.

These registers are intended to hold a 16-bit address in the Indirect Addressing Mode used by MOVX (move external memory), MOVC (move program memory) or JMP (computed branch) instructions. They may be manipulated as a 16-bit register or as two separate 8-bit registers. DPH holds the high byte and DPL holds the low byte of the indirect address.

In general, the Data Pointer registers are used to access external code or data space (e.g., MOVC A,@A+DPTR or MOV A,@DPTR, respectively).

The Data Pointer 1 Register can be accessed through DPL1 and DPH1. These SFR locations always refer to the DPTR1, regardless of the actual data pointer selection by the DPS Register. This 16-bit register is used by all DPTR-related instructions when the LSB of the DPS Register is set to 1, otherwise the DPTR is taken from DPH and DPL.

9.1.6 Data Pointer Select Register – DPS

Table 9.9 Data Pointer Select Register

DPS (SFR 0X92 - RESET=0X00)			DATA POINTER SELECT REGISTER
BIT	**NAME**	**R/W**	**DESCRIPTION**
7:1	Reserved	R	Always read as 0
0	dpsel0	R/W	Data Pointer Register Select: `0` : Data pointer 0 selected `1` : Data pointer 1 selected

The R8051XC2 contains up to two data pointer registers. Each of these registers can be used as 16-bit address source for indirect addressing. The DPS Register serves for selecting the active data pointer register.

© 2013 Microchip Technology Inc.

9.1.7 Data Pointer Control Register – DPC

Table 9.10 Data Pointer Control Register

DPC (SFR 0X93 - RESET=0X00)			DATA POINTER CONTROL REGISTER
BIT	**NAME**	**R/W**	**DESCRIPTION**
7:6	Reserved	R	Always read as 0
5:4	dpc[5:4]	R/W	Not used
3	dpc.3	R/W	Next Data Pointer Selection: The contents of this field is loaded to the DPS Register bit 0 after each MOVX @DPTR instruction. **Note:** This feature is not always enabled. Therefore, for each of the DPS registers this field has to contain a different value pointing to itself so that the auto-switching does not occur with default (reset) values.
2	dpc.2	R/W	Auto-Modification Size: When 0, the current DPTR is automatically modified by 1 after each MOVX @DPTR instruction when **dps.0**=1. When 1, the current DPTR is automatically modified by 2 after each MOVX @DPTR instruction when **dps.0**=1.
1	dps.1	R/W	Auto-Modification Direction: When 0, the current DPTR is automatically incremented after each MOVX @DPTR instruction when **dps.0**=1. When 1, the current DPTR is automatically decremented after each MOVX @DPTR instruction when **dps.0**=1.
0	dps.0	R/W	Auto-Modification Enable: When set, enables auto-modification of the current DPTR after each MOVX @DPTR instruction

The R8051XC2 contains an optional DPTR-related arithmetic unit. It provides auto-increment/auto-decrement by 1 or 2, and auto-switching between active DPTRs. These functions are controlled by the DPC Register, where there are separate DPC register bits for each DPTR, to provide high flexibility in data transfers. The DPC Register address 0x93 points to the window where the actual dpc is selected using the DPS Register, same as for the DPTR.

9.1.8 Program Memory Page Selector Register – PAGESEL

Table 9.11 Program Memory Page Selector Register

PAGESEL (SFR 0X94 - RESET=0X01)			PROGRAM MEMORY PAGE SELECTOR REGISTER
BIT	**NAME**	**R/W**	**DESCRIPTION**
7:2	Reserved	R	Always read as 0

Table 9.11 Program Memory Page Selector Register

PAGESEL (SFR 0X94 - RESET=0X01)			PROGRAM MEMORY PAGE SELECTOR REGISTER
BIT	**NAME**	**R/W**	**DESCRIPTION**
1:0	pagesel[1:0]	R/W	Provides an additional address for program memory in banking scheme for **memaddr[16:15]**. Note that the default value is 1, to provide normal address generation (logical address of 8000h equals the physical address) when the PAGESEL Register is not written at all after reset. The value of 0 should not be used since it causes the banked area (logical address between 8000h-FFFFh) to overlap physically with the common bank (0000h-7FFFh).

The program memory address bus (memaddr) can be extended up to 17 bits with the use of banking. When the CPU targets addresses between 0000h and 7FFFh, the additional bits of the address bus are always 0, as the lowest 32 kB is the common bank to store reset and interrupt vectors, and all common/shared/root subroutines. When the CPU address is higher than 7FFFh of the program memory, the 2-bit contents of the PAGESEL Register is placed into the memaddr[16:15] bits. The maximum number of pages is 4 (the common one at 0-32 kB, and 3 pages (banks) logically visible at addresses between 32 kB-64 kB).

Note: The 0 value of the PAGESEL Register should not be used since it leads to accessing the same physical area at logical address space 8000h-FFFFh as 0000h-7FFFh. This causes the banked area to overlap with the common bank.

9.1.9 Data Memory Page Selector Register – D_PAGESEL

Table 9.12 Data Memory Page Selector Register

D_PAGESEL (SFR 0X95 - RESET=0X01)			DATA MEMORY PAGE SELECTOR REGISTER
BIT	**NAME**	**R/W**	**DESCRIPTION**
7:2	Reserved	R	Always read as 0
1:0	d_pagesel[1:0]	R/W	Provides an additional address for data memory in banking scheme. The default value is 1, to provide normal address generation (logical address of 8000h equals the physical address) when the D_PAGESEL Register is not written to after reset. The value of 0 should not be used since it causes the banked area (logical address between 8000h-FFFFh) to overlap physically with the common bank (0000h-7FFFh).

The external data memory address bus (memaddr) can be extended up to 17 bits with the use of banking. When the CPU targets addresses between 0000h and 7FFFh, the additional bits of the address bus are always 0. When the CPU addresses higher than 7FFFh of the program memory, the 2-bit contents of the D_PAGESEL Register is placed onto the **memaddr[**16**:15]** bits. The maximum number of pages is 4 (the common one at 0-32 kB, and 3 pages (banks) logically visible at addresses between 32 kB-64 kB).

Note: The 0 value of the D_PAGESEL Register should not be used since it leads to accessing the same physical area at logical address space 8000h-FFFFh as 0000h-7FFFh. This causes the banked area to overlap with the common bank.

© 2013 Microchip Technology Inc.

9.1.10 Timer/Counter Control Register – TCON

The TCON Register reflects the current status of R8051XC2 Timer 0 and Timer 1 and it is used to control operation of these modules. The **tf0**, **tf1** (Timer 0 and Timer 1 overflow flags), **ie0** and **ie1** (External Interrupt 0 and 1 flags) will be automatically cleared by hardware when the corresponding service routine is called.

Table 9.13 Timer/Counter Control Register

TCON (SFR 0X88 - RESET=0X00)			**TIMER/COUNTER CONTROL REGISTER**
BIT	**NAME**	**R/W**	**DESCRIPTION**
7	tf1	R/W	Timer 1 Overflow Flag: Set by hardware when Timer 1 overflows. This flag can be cleared by software and is automatically cleared when an interrupt is processed.
6	tr1	R/W	Timer 1 Run Control: If cleared, Timer 1 stops.
5	tf0	R/W	Timer 0 Overflow Flag: Set by hardware when Timer 0 overflows. This flag can be cleared by software and is automatically cleared when an interrupt is processed.
4	tr0	R/W	Timer 0 Run Control: If cleared, Timer 0 stops.
3	ie1	R/W	External Interrupt 1 Flag: Set by hardware when an external interrupt int1 (edge/level, depending on settings) is observed. It is cleared by hardware when an interrupt is processed.
2	it1	R/W	External Interrupt 1 Type Control: If set, External Interrupt 1 is activated at falling edge on input pin. If cleared, External Interrupt 1 is activated at low level on input pin.
1	ie0	R/W	External Interrupt 0 Flag: Set by hardware when an external interrupt int0 (edge/level, depending on settings) is observed. Cleared by hardware when interrupt is processed.
0	it0	R/W	External Interrupt 0 Type Control: If set, External Interrupt 0 is activated at falling edge on input pin. If cleared, External Interrupt 0 is activated at low level on input pin.

9.1.11 Timer Mode Register – TMOD

The TMOD Register is used in configuration of the R8051XC2 Timer 0 and Timer 1.

Table 9.14 Timer Mode Register

TMOD (SFR 0X89 - RESET=0X00)			**TIMER MODE REGISTER**
BIT	**NAME**	**R/W**	**DESCRIPTION**
7	gate	R/W	Timer 1 Gate Control: If set, enables external gate control (pin int(1)) for Counter 1. When int(1) is high, and **tr1** bit is set, the Counter 1 is incremented every falling edge on the t1 input pin.
6	c/t	R/W	Timer 1 Counter/Timer Select: Selects the timer or counter operation. When set to 1, a counter operation is performed; when cleared to 0, the Timer/Counter 1 will function as a timer.
5	m1	R/W	Timer 1 Mode: Selects mode for Timer/Counter 1, as shown in Table 9.15 below.
4	m0		
3	gate	R/W	Timer 0 Gate Control: If set, enables external gate control (pin int(0)) for Counter 0. When int(0) is high, and **tr0** bit is set, the Counter 0 is incremented every falling edge on the t0 input pin
2	c/t	R/W	Timer 0 Counter/Timer Select: Selects the timer or counter operation. When set to 1, a counter operation is performed; when cleared to 0, the Timer/Counter 0 will function as a timer.
1	m1	R/W	Timer 0 Mode: Selects the mode for Timer/Counter 0, as shown in Table 9.15 below.
0	m0		

Table 9.15 Timer/Counter Modes

M0	**M1**	**MODE**	**FUNCTION**
0	0	Mode 0	13-bit Counter/Timer, with 5 lower bits in the TL0 (TL1) Register and 8 bits in TH0 (TH1) Register (for Timer 0 or Timer 1, respectively). Note, that unlike in the 80C51, the 3 high-order bits of TL0 (TL1) are zeroed whenever Mode 0 is enabled.
0	1	Mode 1	16-bit Counter/Timer
1	0	Mode 2	8-bit auto-reload counter/timer. The reload value is kept in TH0 (TH1), while TL0 (TL1) is incremented every machine cycle. When TL0 (TL1) overflows, a value from TH0 (TH1) is copied to TL0 (TL1).

© 2013 Microchip Technology Inc.

Table 9.15 Timer/Counter Modes

M0	M1	MODE	FUNCTION
1	1	Mode 3	For Timer 1: Timer 1 is stopped. For Timer 0: Timer 0 acts as two independent 8-bit timers / counters – TL0, TH0. ▪ TL0 uses the Timer 0 control bits and sets the **tf0** flag on overflow. ▪ TH0 operates as the timer, which is enabled by the **tr1** bit and sets the **tf1** flag on overflow.

9.1.12 Timer 0,1,2 – TH0, TL0, TH1, TL1, TH2, TL2

Table 9.16 Timer 0, 1, and 2 Low Byte

TL0 (SFR 0X8A - RESET=0X00) TL1 (SFR 0X8B - RESET=0X00) TL2 (SFR 0XCC - RESET=0X00)			**TIMER 0/1/2 LOW BYTE**
BIT	**NAME**	**R/W**	**DESCRIPTION**
7:0	TL0[7:0]/TL1[7:0]/ TL2[7:0]	R/W	Timer 0/ Timer 1/Timer 2 Low Byte

Table 9.17 Timer 0, 1, and 2 High Byte

TH0 (SFR 0X8C - RESET=0X00) TH1 (SFR 0X8D - RESET=0X00) TH2 (SFR 0XCD - RESET=0X00)			**TIMER 0/1/2 HIGH BYTE**
BIT	**NAME**	**R/W**	**DESCRIPTION**
7:0	TH0[7:0]/ TH1[7:0]	R/W	TImer 0/ Timer 1/Timer 2 High Byte

- TH0, TL0 registers reflect the state of Timer 0. TH0 holds higher byte and TL0 holds lower byte.
- Timer 0 can be configured to operate as either a timer or counter.
- TH1, TL1 registers reflect the state of Timer 1. TH1 holds the higher byte and TL1 holds the lower byte.
- Timer 1 can be configured to operate as either a timer or counter.
- TH2, TL2 registers reflect the state of Timer 2. TH2 holds the higher byte and TL2 holds the lower byte.
- Timer 2 can be configured to operate in compare, capture or reload modes.

9.1.13 Timer 2 Control Register – T2CON

The T2CON Register reflects the current status of the R8051XC2 Timer 2 and is used to control Timer 2 operation.

Table 9.18 Timer 2 Control Register

T2CON (SFR 0XC8 - RESET=0X00)			**TIMER 2 CONTROL REGISTER**
BIT	**NAME**	**R/W**	**DESCRIPTION**
7	t2ps	R/W	Prescaler Select: `0` : Timer 2 is clocked with 1/12 of the oscillator frequency. `1` : Timer 2 is clocked with 1/24 of the oscillator frequency.
6	i3fr	R/W	Active edge selection for external interrupt “int3”, (used also as a compare and capture signal): `0` : Falling edge `1` : Rising edge
5	i2fr	R/W	Active edge selection for external interrupt “int2”: `0` : Falling edge `1` : Rising edge
4	t2r1	R/W	Timer 2 Reload Mode Selection: `0X` : Reload disabled `10` : Mode 0 `11` : Mode 1
3	t2r0		
2	t2cm	R/W	Timer 2 Compare Mode Selection: `0` : Mode 0 `1` : Mode 1
1	t2i1	R/W	Timer 2 Input Selection (t2i1, t2i0): `00` : Timer 2 stopped `01` : Input frequency f/12 or f/24 `10` : Timer 2 is incremented by falling edge detection at pin “t2”. `11` : Input frequency f/12 or f/24 gated by external pin “t2”.
0	t2i0		

© 2013 Microchip Technology Inc.

9.1.14 Timer 2 Compare/Capture Enable Register – CCEN

The CCEN Register serves as a configuration register for the compare/capture unit associated with the Timer 2.

Table 9.19 Time 2 Compare/Capture Enable Register

CCEN (SFR 0XC1 - RESET=0X00)			**TIMER 2 CCEN REGISTER**
BIT	**NAME**	**R/W**	**DESCRIPTION**
7	cocah3	R/W	Compare/Capture Mode for the CC3 Register: 00 : Compare/capture disabled 01 : Capture on rising edge at pin **TIMER2_CC0** 10 : Compare enabled 11 : Capture on write operation into register CC3
6	cocal3		
5	cocah2	R/W	Compare/Capture Mode for the CC2 Register: 00 : Compare/capture disabled 01 : Capture on rising edge at pin **TIMER2_CC1** 10 : Compare enabled 11 : Capture on write operation into register CC2
4	cocal2		
3	cocah1	R/W	Compare/Capture Mode for the CC1 Register: 00 : Compare/capture disabled 01 : Capture on rising edge at pin **TIMER2_CC2** 10 : Compare enabled 11 : Capture on write operation into register CC1
2	cocal1		
1	cocah0	R/W	Compare/Capture Mode for CRC Register 00 : Compare/capture disabled 01 : Capture on falling/rising edge at pin **TIMER2_CC3** (not used) 10 : Compare enabled 11 : Capture on write operation into register CRCL
0	cocal0		

9.1.15 Timer 2 Compare/Capture Registers – CC1, CC2, CC3

Table 9.20 Timer 2 Compare/Capture Registers Low Byte

CCL1 (SFR 0XC2 - RESET=0X00) CCL2 (SFR 0XC4 - RESET=0X00) CCL3 (SFR 0XC6 - RESET=0X00)			**TIMER 2 COMPARE/CAPTURE 1,2,3 LOW BYTE**
BIT	**NAME**	**R/W**	**DESCRIPTION**
7:0	CCL1[7:0]/ CCL2[7:0]/ CCL3[7:0]	R/W	TImer 2 Compare/Capture Register Low Byte

Table 9.21 Timer 2 Compare/Capture Registers High Byte

CCH1 (SFR 0XC3 - RESET=0X00) CCH2 (SFR 0XC5 - RESET=0X00) CCH3 (SFR 0XC7 - RESET=0X00)			TIMER 2 COMPARE/CAPTURE 1,2,3 HIGH BYTE
BIT	**NAME**	**R/W**	**DESCRIPTION**
7:0	CCH1[7:0]/ CCH2[7:0]/ CCH3[7:0]	R/W	TImer 2 Compare/Capture Register High Byte

Compare/Capture Registers (CC1, CC2, CC3) are 16-bit registers used in the operation of the compare/capture unit associated with Timer 2. CCHn holds the higher byte and CCLn holds the lower byte of the CCn Register.

9.1.16 Timer 2 Compare/Capture Registers – CRCH, CRCL

Compare/Capture Registers (CRCH, CRCL) are 16-bit registers used in the operation of the compare/capture unit associated with the Timer 2. CRCH holds higher byte and CRCL holds lower byte.

Table 9.22 Timer 2 Compare/Capture Registers

CRCL (SFR 0XCA - RESET=0X00)			TIMER 2 COMPARE/CAPTURE 1,2,3 LOW BYTE
BIT	**NAME**	**R/W**	**DESCRIPTION**
7:0	CRCL[7:0]	R/W	TImer 2 Compare/Capture Register Low Byte

Table 9.23 Timer 2 Compare/Capture Register

CRCH (SFR 0XCB - RESET=0X00)			TIMER 2 COMPARE/CAPTURE 1,2,3 HIGH BYTE
BIT	**NAME**	**R/W**	**DESCRIPTION**
7:0	CRCH[7:0]	R/W	TImer 2 Compare/Capture Register High Byte

© 2013 Microchip Technology Inc.

9.1.17 Watchdog Timer Reload Register – WDTREL

The WDTREL Register holds the reload value of 7 high-order bits of the watchdog timer. It also configures the frequency prescaler for the watchdog timer.

Table 9.24 Watchdog Timer Reload Register

WDTREL (SFR 0X86 - RESET=0X00)			**DATA POINTER LOW**
BIT	**NAME**	**R/W**	**DESCRIPTION**
7	WDTREL7	R/W	Prescaler Select: When set, the watchdog is clocked through an additional divide-by-16 prescaler.
6:0	WDTREL[6:0]	R/W	Watchdog Reload Value: Reload value for the highest 7 bits of the watchdog timer. This value is loaded to the watchdog timer when a refresh is triggered by a consecutive setting of bits **IEN0.wdt** and **IEN1.swdt**).

9.1.18 Interrupt Enable 0 Register – IEN0

Table 9.25 Interrupt Enable 0 Register

IEN0 (SFR 0XA8 - RESET=0X00)			**INTERRUPT ENABLE 0 REGISTER**
BIT	**NAME**	**R/W**	**DESCRIPTION**
7	eal	R/W	Interrupts Enable: When set to 0 – all interrupts are disabled. Otherwise enabling each interrupt is done by setting the corresponding interrupt enable bit.
6	wdt	R/W	Watchdog Timer Refresh Flag: Set to initiate a refresh of the watchdog timer. This bit must be set directly before **IEN1.swdt** is set to prevent an unintentional refresh of the watchdog timer. The **wdt** bit is cleared by hardware after the next instruction executed after the one that had set this bit. Therefore, a watchdog refresh can only be done by sequentially setting **wdt** followed by **swdt**.
5	et2	R/W	Timer 2 Interrupt Enable: et2=0 : Timer 2 Interrupt is disabled. et2=1 : and eal=1 Timer 2 Interrupt is enabled.
4	es0	R/W	16550 Serial Port 0 Interrupt Enable: es0=0 : Serial Port 0 Interrupt is disabled. es0=1 and eal=1 : Serial Port 0 Interrupt is enabled.
3	et1	R/W	Timer 1 Overflow Interrupt Enable: et1=0 : Timer 1 Overflow Interrupt is disabled. et1=1 and eal=1 : Timer 1 Overflow Interrupt is enabled.

Table 9.25 Interrupt Enable 0 Register

IEN0 (SFR 0XA8 - RESET=0X00)			INTERRUPT ENABLE 0 REGISTER
BIT	**NAME**	**R/W**	**DESCRIPTION**
2	ex1	R/W	External Interrupt 1 Enable (GPIO Ports 0,1,2): ex1=0 : External Interrupt 1 is disabled. ex1=1 and eal=1 : External Interrupt 1 is enabled.
1	et0	R/W	Timer 0 Overflow Interrupt Enable: et0=0 : Timer 0 Overflow Interrupt is disabled. et0=1 and eal=1 : Timer 0 Overflow Interrupt is enabled.
0	ex0	R/W	External Interrupt 0 Enable (or of all interrupts except GPIOs) ex0=0 : External Interrupt 0 is disabled. ex0=1 : and eal=1 External Interrupt 0 is enabled.

9.1.19 Interrupt Enable 1 Register – IEN1

Table 9.26 Interrupt Enable 1 Register

IEN1 (SFR 0XB8 - RESET=0X00)			INTERRUPT ENABLE 1 REGISTER
BIT	**NAME**	**R/W**	**DESCRIPTION**
7	exen2	R/W	Timer 2 External Reload Interrupt Enable: exen2=0 : Timer 2 External Reload Interrupt 2 is disabled. exen2=1 and eal=1 : Timer 2 External Reload Interrupt 2 is enabled.
6	swdt	R/W	Watchdog Timer Start/Refresh Flag: set to activate/refresh the watchdog timer. When set directly after setting **IEN0.wdt**, a watchdog timer refresh is performed. This bit is immediately cleared by hardware.
5	ex6	R/W	External Interrupt 6 Enable (Power Status Event): ex6=0 : External Interrupt 6 is disabled. ex6=1 and eal=1 : External Interrupt 6 is enabled.
4	ex5	R/W	External Interrupt 5 Enable (USB): ex5=0 : External Interrupt 5 is disabled. ex5=1 and eal=1 : External Interrupt 5 is enabled.
3	ex4	R/W	External Interrupt 4 Enable (Endpoint 4): ex4=0 : External Interrupt 4 is disabled. ex4=1 and eal=1 : External Interrupt 4 is enabled.

© 2013 Microchip Technology Inc.

Table 9.26 Interrupt Enable 1 Register

IEN1 (SFR 0XB8 - RESET=0X00)			INTERRUPT ENABLE 1 REGISTER
BIT	**NAME**	**R/W**	**DESCRIPTION**
2	ex3	R/W	External Interrupt 3 Enable (Endpoint 3): ex3=0 : External Interrupt 3 is disabled. ex3=1 and eal=1 : External Interrupt 3 is enabled.
1	ex2	R/W	External Interrupt 2 Enable (SPI1): ex2=0 : External Interrupt 2 is disabled. ex2=1 and eal=1 : External Interrupt 2 is enabled.
0	ex7	R/W	External Interrupt 7 Enable (Interrupt not connected to any source):

9.1.20 Interrupt Enable 2 Register – IEN2

Table 9.27 Interrupt Enable 2 Register

IEN2 (SFR 0X9A - RESET=0X00)			INTERRUPT ENABLE 2 REGISTER
BIT	**NAME**	**R/W**	**DESCRIPTION**
7:6	Reserved	R	Always read as 0
5	ex12	R/W	External Interrupt 12 Enable (Smart Card 1 or 2): ex12=0 : External Interrupt 12 is disabled. ex12=1 and eal=1 : External Interrupt 12 is enabled.
4	ex11	R/W	External Interrupt 11 Enable (Endpoint 0): ex11=0 : External Interrupt 11 is disabled. ex11=1 and eal=1 : External Interrupt 11 is enabled.
3	ex10	R/W	External Interrupt 10 Enable (Endpoint 5): ex10=0 : External Interrupt 10 is disabled. ex10=1 and eal=1 : External Interrupt 10 is enabled.
2	ex9	R/W	External Interrupt 9 Enable (Endpoint 2): ex9=0 : External Interrupt 9 is disabled. ex9=1 and eal=1 : External Interrupt 9 is enabled.
1	ex8	R/W	External Interrupt 8 Enable (Endpoint 1): ex8=0 : External Interrupt 8 is disabled. ex8=1 and eal=1 : External Interrupt 8 is enabled.
0	Reserved	R	Always read as 0

9.1.21 Interrupt Priority Registers – IP0, IP1

The 18 interrupt sources are grouped into 6 priority groups. For each of the groups, one of four priority levels can be selected. It is achieved by setting appropriate values in the IP0 and IP1 registers.

The contents of the interrupt priority registers define the priority levels for each interrupt source according to the tables below.

Table 9.28 Interrupt Priority 0 Register

IP0 (SFR 0XA9 - RESET=0X00)			**INTERRUPT PRIORITY 0 REGISTER**
BIT	**NAME**	**R/W**	**DESCRIPTION**
7	Reserved	R/W	Always read as 0
6	wdts	R/W	Watchdog Timer Status Flag: This bit is not set by hardware when the watchdog timer reset occurs. If the **RESET_SRC_WDOG** bit in the CLKPWR_TEST4 Register is set, it indicates that the chip reset was due to a watchdog timer reset.
5:0	-	R/W	Interrupt Priority: Each bit together with the corresponding bit from the IP1 Register specifies the priority level of the respective interrupt priority group.

Table 9.29 Interrupt Priority 1 Register

IP1 (SFR 0XB9 - RESET=0X00)			**INTERRUPT PRIORITY 1 REGISTER**
BIT	**NAME**	**R/W**	**DESCRIPTION**
7:6	Reserved	R/W	Always read as 0
5:0	-	R/W	Interrupt Priority: Each bit together with the corresponding bit from the IP0 Register specifies the priority level of the respective interrupt priority group.

Table 9.30 Priority Groups

GROUP	**CORRESPONDING INTERRUPT BITS**	**INTERRUPTS IN EACH GROUP**			
0	IP1.0, IP0.0	Ext Interrupt 0 - or of all interrupts except GPIOs			Ext Interrupt 7 - Reserved
1	IP1.1, IP0.1	Timer 0 Interrupt	External Interrupt 8 - Endpoint 1		External Interrupt 2 - SPI1 Interrupt
2	IP1.2, IP0.2	External Interrupt 1 - GPIO port 0,1,2	External Interrupt 9 - Endpoint 2		External Interrupt 3 - Endpoint 3

© 2013 Microchip Technology Inc.

Table 9.30 Priority Groups

GROUP	CORRESPONDING INTERRUPT BITS	INTERRUPTS IN EACH GROUP			
3	IP1.3, IP0.3	Timer 1 Interrupt	External Interrupt 10 - Endpoint 5		External Interrupt 4 - Endpoint 4
4	IP1.4, IP0.4	16550 UART Interrupt	External Interrupt 11 - Endpoint 0		External Interrupt 5 - USB Interrupt
5	IP1.5, IP0.5	Timer 2 Interrupt	External Interrupt 12 - Smart Card 1/2	Reserved	External Interrupt 6 - Power Status Event

Table 9.31 Priority Levels

IP1.X	IP0.X	PRIORITY LEVEL
0	0	Level 0 (lowest)
0	1	Level 1
1	0	Level 2
1	1	Level 3 (highest)

Note: *X* represents the priority group

9.1.22 Power Control Register – PCON

Table 9.32 Power Control Register

PCON (SFR 0X87 - RESET=0X08)			POWER CONTROL REGISTER
BIT	**NAME**	**R/W**	**DESCRIPTION**
7	smod	R/W	This bit is not used.
6	wdt_tm	R/W	Watchdog Timer Test Mode Flag: When set to 1, the fclk/12 divider at the input of the watchdog timer is skipped.
5	isr_tm	R/W	Interrupt Service Routine Test Mode Flag: When set to 1, the interrupt vectors assigned to Timer 0 and 1, Serial Port 0 and 1, and SPI interfaces can be triggered only with the use of external inputs of the core.
4	pmw	R/W	Program Memory Write Mode: Setting this bit enables the Program Memory Write Mode.
3	p2sel	R/W	This bit is not used.
2	gf0	R/W	General Purpose Flag

Table 9.32 Power Control Register

PCON (SFR 0X87 - RESET=0X08)			POWER CONTROL REGISTER
BIT	**NAME**	**R/W**	**DESCRIPTION**
1	stop	R/W	STOP Mode Control: Setting this bit activates the STOP Mode. This bit is always read as 0.
0	idle	R/W	Idle Mode Control: Setting this bit activates the IDLE Mode. This bit is always read as 0.

9.1.22.1 pmw

The MOVX instructions perform one of two actions depending on the state of **pmw** bit (**PCON.4**). The **pmw** bit selects the standard or advanced behavior of the microcontroller during execution of MOVX instruction.

When the **pmw** is cleared or after reset, MOVX instructions allow read/write access to external data memory space. The software can set the **pmw** bit to enable access to program memory space. Once **pmw** is set, MOVX data memory instructions become MOVX program memory instructions with 8 or 16-bit addressing modes. The software clears **pmw** to switch back to normal MOVX behavior.

Setting or clearing **pmw** does not influence the execution of MOVC instruction and it does not change the behavior of program memory reading.

9.1.22.2 CPU_IDLE

When the CPU_IDLE Mode is invoked, the ISR and other peripherals are clocked normally and interrupts are generated normally. Therefore the irq signal coming from the ISR module can directly wake-up the CPU from CPU_IDLE Mode.

9.1.22.3 CPU_STOP

When the CPU_STOP Mode is invoked, neither the clkcpu nor clkper are working. The ISR module can't generate an interrupt since no peripherals are working. The only interrupts that may be accepted in the CPU_STOP Mode are External Interrupt 0 and 1. Hence before entering STOP Mode, the software must activate interrupts for the expected GPIO port 0/1/2 interrupts (or USB Interrupt due to resume). An interrupt event would enable the clocks clkcpu, clkper to continue CPU processing.

9.1.23 Software Reset Register – SRST

Table 9.33 Software Reset Register

SRST (SFR 0XF7 - RESET=0X00)			SOFTWARE RESET REGISTER
BIT	**NAME**	**R/W**	**DESCRIPTION**
7:1	Reserved	R	Always read as 0

© 2013 Microchip Technology Inc.

Table 9.33 Software Reset Register

SRST (SFR 0XF7 - RESET=0X00)			SOFTWARE RESET REGISTER
BIT	**NAME**	**R/W**	**DESCRIPTION**
0	srstreq	R/W	Software Reset Request: Writing a 0 to this bit will have no effect. Single writing a 1 value to this bit will have no effect. Double writing 1 value (in two consecutive instructions) will generate an internal software reset. Reading this bit will NOT provide feedback about the reset source. The **RESET_SRC_SRST** bit in the CLKPWR_TEST4 Register if one indicates that the chip reset was due to software reset request.

9.1.24 SPI1 Serial Peripheral Status Register – SPSTA

Table 9.34 SPI1 Serial Peripheral Status Register

SPSTA (SFR 0XE1 - RESET=0X00)			SERIAL PERIPHERAL (SPI1) STATUS REGISTER
BIT	**NAME**	**R/W**	**DESCRIPTION**
7	spif	R	Serial Peripheral Data Transfer Flag: Set by hardware upon data transfer completion. Cleared by hardware when data transfer is in progress. Can also be cleared by reading the **SPSTA.spif** bit set, and then reading the SPDAT Register.
6	wcol	R	Write Collision Flag: Set by hardware upon write collision to SPDAT. Cleared by hardware upon data transfer completion when no collision has occurred. Can be also cleared by an access to the SPSTA Register and an access to SPDAT Register.
5	sserr	R	Synchronous Serial Slave Error Flag: Set by hardware when **SPI1_CE** input is de-asserted before the end of receive sequence. Cleared by disabling the SPI1 module (clearing the **SPCON.spen** bit).
4	modf	R	Mode Fault Flag: Set by hardware when the **SPI1_CE** pin level is in conflict with the actual mode of the SPI_MS controller (configured as Master while externally selected as Slave). Cleared by hardware when the **ssn** pin is at appropriate level. Can be also cleared by software by reading the SPSTA Register with **modf** set.
3:0	Reserved	R	Always read as 0

The SPSTA Register contains flags to signal data transfer complete, write collision, and inconsistent logic level on **SPI1_CE** (Slave select) pin (mode fault error).

9.1.25 SPI1 Serial Peripheral Control Register – SPCON

The Serial Peripheral Control Register is used to configure the SPI module. It selects the Master clock rate, configures the module as Master or Slave, selects the serial clock polarity and phase, enables the **SPI1_CE** input, and enables/disables the whole SPI1 module.

Table 9.35 SPI1 Serial Peripheral Control Register

SPCON (SFR 0XE2 - RESET=0X14)			**SERIAL PERIPHERAL (SPI1) CONTROL REGISTER**
BIT	**NAME**	**R/W**	**DESCRIPTION**
7	spr2	R/W	Serial Peripheral Rate 2: Together with **spr[1:0]** defines the clock rate in Master Mode.
6	spen	R/W	Serial Peripheral Enable: When cleared, disables the SPI1 Interface. When set enables the SPI1 Interface.
5	ssdis	R/W	SS Disable: When cleared enables the **SPI1_CE** input in both Master and Slave modes. When set disables the **SPI1_CE** input in both Master and Slave modes. In Slave Mode, this bit has no effect if **cpha**=0. When **ssdis** is set, no **SPSTA.modf** interrupt request will be generated.
4	mstr	R/W	Serial Peripheral Master: When cleared configures the SPI1 as a Slave. When set configures the SPI1 as a Master.
3	cpol	R/W	Clock Polarity: When cleared, the **SPI1_CLK** is set to 0 in idle state. When set, the **SPI1_CLK** is set to 1 in idle state.
2	cpha	R/W	Clock Phase: When cleared, data is sampled when the **SPI1_CLK** leaves the idle state (see **SPCON.cpol**). When set, data is sampled when the **SPI1_CLK** returns to idle state (see **SPCON.cpol**).
1:0	spr[1:0]	R/W	Serial Peripheral Rate: Together with **spr2** specify the serial clock rate in Master Mode.

Table 9.36 SPI1 Transfer Rate

SPR2	**SPR1**	**SPR0**	**SERIAL PERIPHERAL RATE (SPI1_RATE)**
0	0	0	spi1_clk/2
0	0	1	spi1_clk/4
0	1	0	spi1_clk/8
0	1	1	spi1_clk/16

 © 2013 Microchip Technology Inc.

Table 9.36 SPI1 Transfer Rate

SPR2	SPR1	SPR0	SERIAL PERIPHERAL RATE (SPI1_RATE)
1	0	0	spi1_clk/32
1	0	1	spi1_clk/64
1	1	0	spi1_clk/128
1	1	1	The Master clock is not generated (when **SPCON.cpol**=1, the **SPI1_CLK** output is high level, otherwise is low level)

9.1.26 SPI1 Serial Peripheral Data Register – SPDAT

The SPDAT Register is a read/write buffer for the “receive data” register. While writing to the SPDAT, data is placed directly into the shift register (there is no transmit buffer).

Table 9.37 SPI1 Serial Peripheral Data Register

SPDAT (SFR 0XE3 - RESET=0X00)			SERIAL PERIPHERAL (SPI1) DATA REGISTER
BIT	**NAME**	**R/W**	**DESCRIPTION**
7:0	spdat[7:0]	R/W	Serial Peripheral Data: Reading returns the value located in the receive buffer, not the shift register.

9.1.27 SPI1 Serial Peripheral Slave Select Register – SPSSN

Table 9.38 SPI Serial Peripheral Slave Select Register

SPSSN (SFR 0XE4 - RESET=0X0F)			SERIAL PERIPHERAL (SPI1) SLAVE SELECT REGISTER
BIT	**NAME**	**R/W**	**DESCRIPTION**
7	SPI1_SLV_REGOUT	R/W	If reset, it causes **SPI1_MISO** data to be output based on the level of **SPI1_CLK** (and **SPCON.cpol**). If this bit is set, it causes the **SPI1_MISO** data to be output only double sync detection of **SPI1_CLK** transition.
6	SPI1_SSN_LOW_B2B	R/W	If set, this bit indicates that SPI1 in Slave supports **SPI1_CE_N** low across multiple bytes. If this bit is high, **SPI1_CE_N** transition inactive after every byte transfer in Slave Mode.
5	SPI1_TXONLY	R/W	If set, this bit indicates to the SPI1 core that it is operating in transmit only mode (Master or Slave). The received byte is a don’t care and can overflow. It will not be read by the CPU or endpoint DMA.
4	SPI1_RXONLY	R/W	This bit if set indicates to the SPI1 core, that it is operating in receive only mode (Master or Slave). The transmitted byte is a don’t care, and SPI1 core will not wait for a write from the CPU or endpoint DMA for transmit byte.
3:1	Reserved	R	Always read as 0

Table 9.38 SPI Serial Peripheral Slave Select Register

SPSSN (SFR 0XE4 - RESET=0X0F)			SERIAL PERIPHERAL (SPI1) SLAVE SELECT REGISTER
BIT	**NAME**	**R/W**	**DESCRIPTION**
0	spssn0	R/W	Serial Peripheral Data: The SPSSN is a read/write register used to control the **spssn[7:0]** output bus of the core. Data written to this register is directly available on the spssn output. Each of its bits can be used to select a separate external SPI Slave device. Only bit 0 is used to control **SPI1_CE** output.

If the bits SPI1_TXONLY and SPI1_RXONLY are reset, then the default behavior of bidirectional transfer of SPI1 occurs.

The firmware can get a single alarm interrupt, when hce, mce, sce, ssce are enabled. If an interrupt every second is desired, then only hce, mce, ssce are enabled.

The “rtcreset” is CPU hard (RESET_N=0) and soft reset conditions.

9.2 Special Function Registers Summary

The R8051XC can access up to 128 Special Function Registers. These registers can only be accessed directly.

Table 9.39 Special Function Registers Summary

REGISTER	ADDRESS	DEFAULT	DESCRIPTION
SP	81h	07h	Stack Pointer
DPL	82h	00h	Data Pointer 0 Low
DPH	83h	00h	Data Pointer 0 High
DPL1	84h	00h	Data Pointer 1 Low
DPH1	85h	00h	Data Pointer 1 High
WDTREL	86h	00h	Watchdog Timer Reload Register
PCON	87h	00h	Power Control
TCON	88h	00h	Timer/Counter Control Register
TMOD	89h	00h	Timer Mode Register
TL0	8Ah	00h	Timer 0, Low Byte
TL1	8Bh	00h	Timer 1, Low Byte
TH0	8Ch	00h	Timer 0, High Byte
TH1	8Dh	00h	Timer 1, High Byte
DPS	92h	00h	Data Pointer Select Register
DPC	93h	00h	Data Pointer Control Register
PAGESEL	94h	01h	Program Memory Page Selector

© 2013 Microchip Technology Inc.

Table 9.39 Special Function Registers Summary (continued)

REGISTER	ADDRESS	DEFAULT	DESCRIPTION
D_PAGESEL	95h	01h	External Data Page Selector
IEN2	9Ah	00h	Interrupt Enable Register 2
IEN0	A8h	00h	Interrupt Enable Register 0
IP0	A9h	00h	Interrupt Priority Register 0
IP/IEN1	B8h	00h	Interrupt Priority Register/Enable Register 1
IP1	B9h	00h	Interrupt Priority Register 1
CCEN	C1h	00h	Compare/Capture Enable Register
CCL1	C2h	00h	Compare/Capture Registers – CC1 Low Byte
CCH1	C3h	00h	Compare/Capture Registers – CC1 High Byte
CCL2	C4h	00h	Compare/Capture Registers – CC2 Low Byte
CCH2	C5h	00h	Compare/Capture Registers – CC2 High Byte
CCL3	C6h	00h	Compare/Capture Registers – CC3 Low Byte
CCH3	C7h	00h	Compare/Capture Registers – CC3High Byte
T2CON	C8h	00h	Timer 2 Control Register
CRCL	CAh	00h	Compare/Capture Registers – CRC Low Byte
CRCH	CBh	00h	Compare/Capture Registers – CRC High Byte
TL2	CCh	00h	Timer 2, Low Byte
TH2	CDh	00h	Timer 2, High Byte
PSW	D0	00h	Program Status Word
IEN4	D1h	00h	Interrupt Enable Register 4
ACC	E0h	00h	Accumulator
SPSTA	E1h	00h	Serial Peripheral Status Register
SPCON	E2h	14h	Serial Peripheral Control Register
SPDAT	E3h	00h	Serial Peripheral Data Register
SPSSN	E4h	FFh	Serial Peripheral Slave Select Register
B	F0	00h	B Register
SRST	F7h	00h	Software Reset Register

Chapter 10 Smart Card Interface

The SEC1110 provides one Smart Card Interface based on the ISO/IEC 7816 Standard, while the SEC1210 provides two interfaces. The SEC1210, however, provides only one shared Packet FIFO. Hence, only one of the Smart Cards can transfer data at any point of time, though both may be active and operational.

10.1 Interconnect to Smart Card Terminal

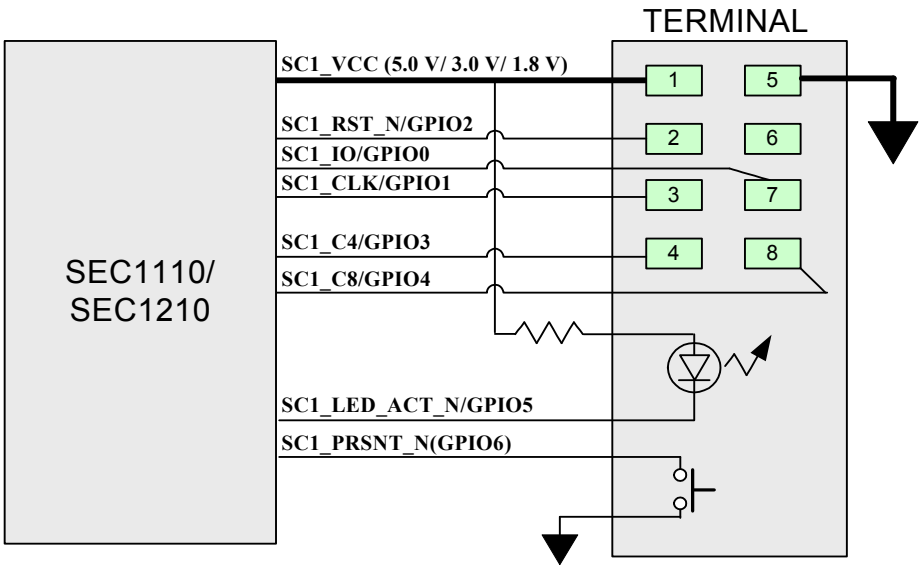

Figure 10.1 Smart Card 1 Interconnect

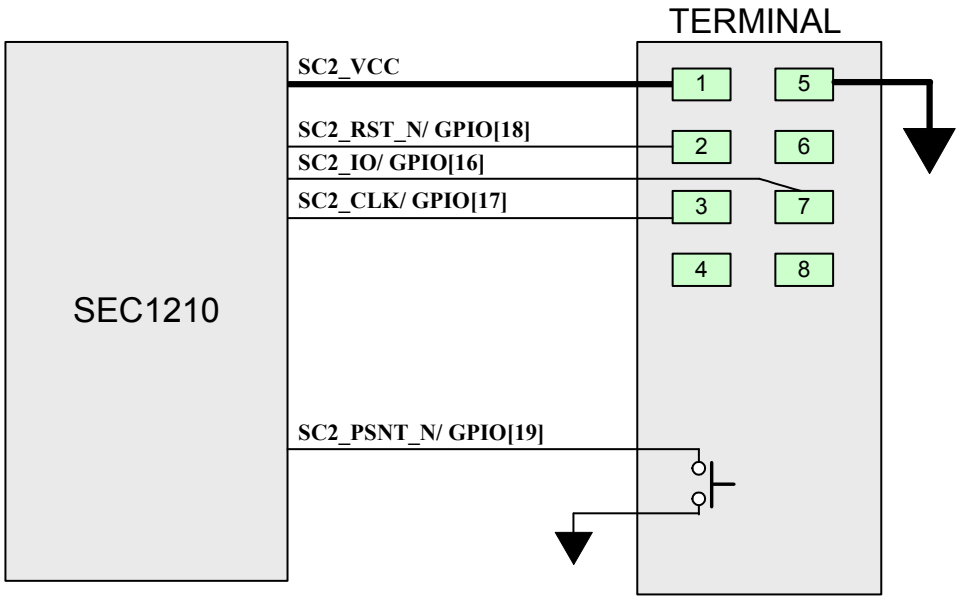

Figure 10.2 S.A.M Interface (Smart Card 2)

© 2013 Microchip Technology Inc.

10.2 Top Level of the Smart Card Interface

The Smart Card interface can alternatively be used as GPIOs. The synchronous ISO/IEC 7816-10 is supported by this block by bit-addressable GPIOs (controls in the SC1 and SC2), or it can be configured to output the signals from the GPIO block itself.

The muxing of the signals of the three different interfaces is shown in the figure below. The selection of whether the GPIOs or the Smart Card logic controls the pins is controlled by auxiliary registers in GPIO block.

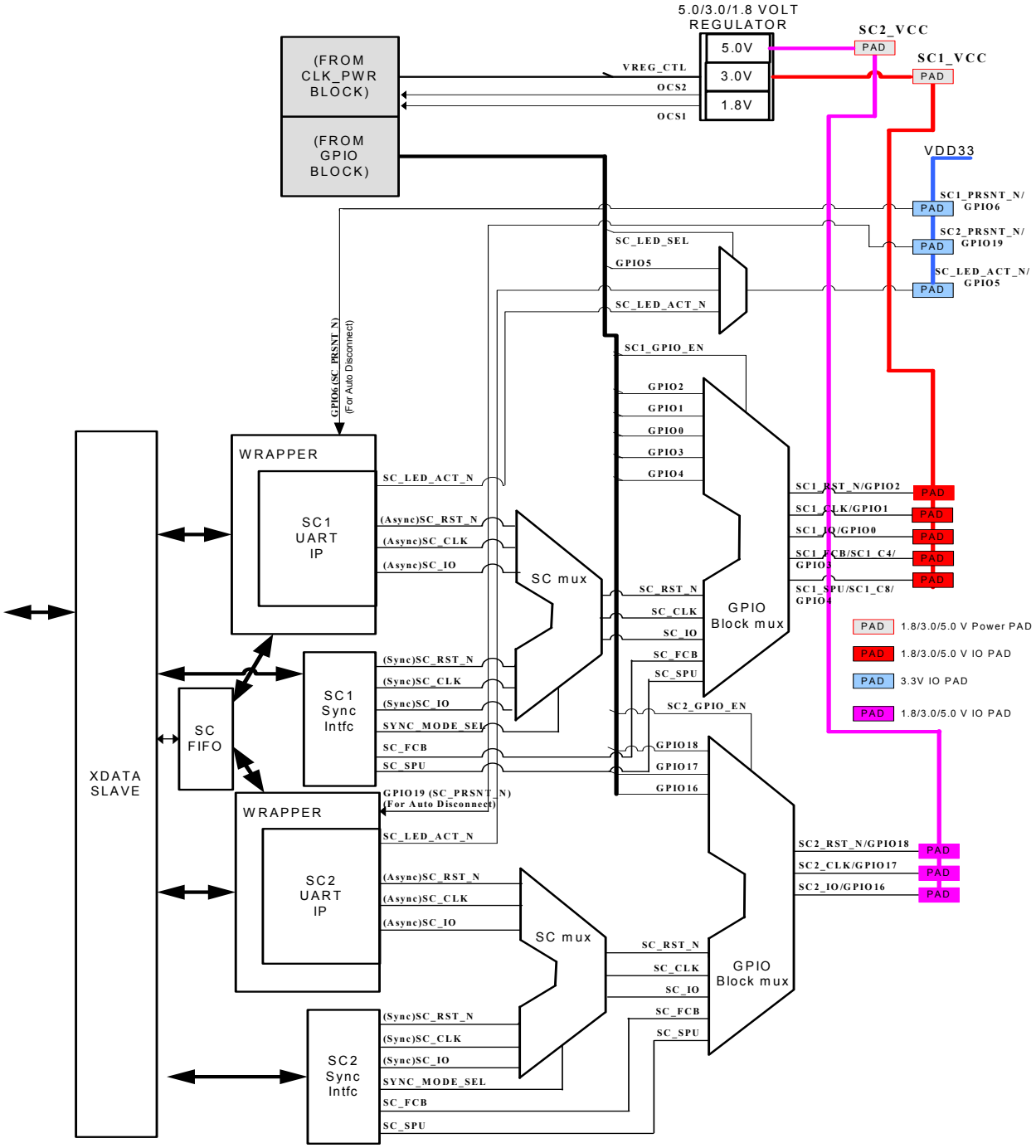

Figure 10.3 Smart Card1,2 Interconnect

10.3 General Description

The Smart Card Interface serves as the core of a Terminal, or Interface Device (IFD), which communicates with an insertable Smart Card, also called an Integrated Circuit Card (ICC).

The Smart Card interface is a UART-like interface that supports the ISO 7816 asynchronous protocols named T=0 and T=1. It transmits and receives serial data via the **SCx_IO** (x is 1 or 2) signal pin. Each byte transmitted or received is transferred as a character with a start bit, 8 data bits, a parity bit, and an amount of Guard Time (stop bits) that depends on the protocol used and the declared characteristics of the card.

To initiate communication with the Smart Card, the Smart Card must be inserted into the terminal device. A mechanical or electrical sensor will detect this event, pulling the **SCx_PRSNT_N**(**GPIO6** or **GPIO19**) pin low to indicate that the electrical contacts are seated. The insertion of the card will cause a **GPIO6** or **GPIO19** Interrupt after the debounce period. If the system is in suspend state, the GPIO transition will cause the system to be woken up first, followed by the interrupt to the processor.

Once it is established that a Smart Card is present, firmware will use the VREG_CTL Register to apply power to the card. Once the interface is powered, the terminal can initiate communication with the Smart Card by driving the **SCx_RST_N** pin low. There are two types of resets: a cold reset and a warm reset. The cold reset sequence is used immediately after power is applied to the interface: it generates the **SCx_CLK** output, sets the **SCx_IO** pin as an input with a weak pull-up, and keeps the **SCx_RST_N** pin low (its initial state) for a defined period of time after the clock starts running. The warm reset only affects the **SCx_RST_N** pin, which is pulled low for a defined period of time: it requires that the interface already be powered and a steady clock be already applied to the card. Bits have been provided in the SC_ICR Register that may be controlled by software to initiate these sequences. When either of these resets terminates (**SCx_RST_N** going high) the Smart Card will return a sequence of characters called the Answer to Reset (ATR) message as defined by ISO 7816-3. The Smart Card is required to respond to a reset sequence as shown in the cold reset and warm reset timing diagrams (see Figure 10.10 and Figure 10.11 on page 83).

The first character of the ATR message, called TS, is interpreted by hardware in the SEC1110 and SEC1210, determining the bit encoding convention used by the card (direct or inverse) as defined by ISO 7816-3, which defines the polarity and the order of the data and parity bits in the character. The TS byte, interpreted according to the convention it selects, is placed into the FIFO, and data received from that point onward is assembled according to the selected convention and loaded into the FIFO to be read by software.

The rest of the ATR response from the Smart Card returns the operational limits of the Smart Card. Software must interpret this response and set the SEC1110 and SEC1210 runtime registers accordingly. During the ATR message, data will be received based on a default value of the bit time, called the Elementary Time Unit (etu). Two ATR parameters named F and D are used to define a new etu time. Once this is determined, software can program the BRG Divisor (SC_DLM and SC_DLL) and the sampling rate for the baud rate generator accordingly. The hardware divides the Mhzsc1_clk (typically 48 MHz) system clock, by the BRG divisor and the sampling rate to determine the etu value (bit time). The **SCx_CLK** frequency is generated by dividing the sc1_clk clock by the SC_CLK_DIV DIVISOR field. Software will also set up the Extra Guard Time Register (SC_EGT), the Block Guard Time (SC_BGT) Register and the protocol Mode (T=0 or T=1 Mode) to set the required amount of Guard Time between character transmissions.

A negotiation phase called PPS may occur, or communication may begin immediately using the parameters provided by the card's ATR message. In either case, all communication after the ATR message consists of individual exchanges, in which the IFD transmits a block of data and the ICC responds with a return message. For this reason, and because the response time from the ICC can be too short for software intervention, software will enable both the SEC1110 and SEC1210 transmitter and receiver at the same time, and the receiver hardware will remain inactive until the transmission phase of the exchange has completed.

An additional stop clock feature has been provided to hold the **SCx_CLK** output at a particular voltage level between exchanges, as may be allowed by the card for power savings. Clock switching is glitch free.

Hardware protocol timers, set according to default timings, will monitor the Smart Card interface during the reset/ATR sequence for an unresponsive or defective card, based on the EMV, ISO and PC/SC timing requirements. If the ATR response is not received within the given time, or does not obey the required timings, a Timer Interrupt will result. The software can then take corrective action or initiate the deactivation sequence to stop and power-down the card.

After the ATR sequence, the same set of hardware timers are used, based on ATR parameters EGT, CWT, BWT, and/or WWT, to monitor timings for the subsequent data exchanges.

One of two protocols is selected, defined by a parameter T in the ATR message, and potentially negotiated in a PPS exchange. The protocol T=0 is character-oriented, with parity error detection and re-transmission on a character-by-character basis. The protocol T=1 is block-oriented, with an error-free link layer based on block re-transmission,

 © 2013 Microchip Technology Inc.

resembling the X.25 communication standard. In the T=1 protocol, both individual character parity and a block check field are used to detect errors.

The SEC1110 and SEC1210 SC_FIFO is deep enough to hold an entire message of maximum length (259 bytes in SEC1110/SEC1210 and 261 bytes in SEC1110/SEC1210). It transmits data, pre-loaded into the SC_FIFO, when the transmit control bit is set by software. It immediately turns around, enabling the Receiver to put data received back into the SC_FIFO. The SC_FIFO Threshold Interrupt is triggered by received data only, though a separate interrupt is available to signal when the transmit phase has ended. The hardware has significant knowledge of the protocol being implemented, and can be set up to filter out bytes that would lead to a message longer than the SC_FIFO depth.

After deactivation of the ICC, it is required to perform a block reset to the smart clock block using SC1_RESET or SC2_RESET, or initialize all the registers to desired values.

10.4 Character Framing

The SEC1110 and SEC1210 meets the requirements for a character frame as defined by ISO 7816-3. The T=0 and T=1 protocol differ in the minimum amount of Guard Time: 2 etus for T=0, and 1 etu for T=1, which does not require a character-by-character parity error response.

Character parity is checked as each byte is received by hardware. If a parity error is detected when a byte is received, the parity error status bit will be set. This status bit can be polled by software, or it can be programmed to generate an interrupt and/or to deactivate the card in hardware. If character repetition is enabled (used in the T=0 protocol) the SEC1110 and SEC1210 will pull the **SCx_IO** line low following a received parity error, for the duration of 1 etu as defined by ISO 7816-3. If the card signals receipt with a parity error while the SEC1110 and SEC1210 is transmitting, it will repeat the character up to 4 additional times. Whether transmitting or receiving, failure after 5 transmissions of the same character will cause a Parity Error Interrupt and/or hardware deactivation of the ICC.

Note: Software should not try to initiate a RESYNCH until the transaction has completed, because the card may still be trying to send data to the IFD. Timeout timers and an Activity Detection bit are provided to assist software in this determination, in case of an error.

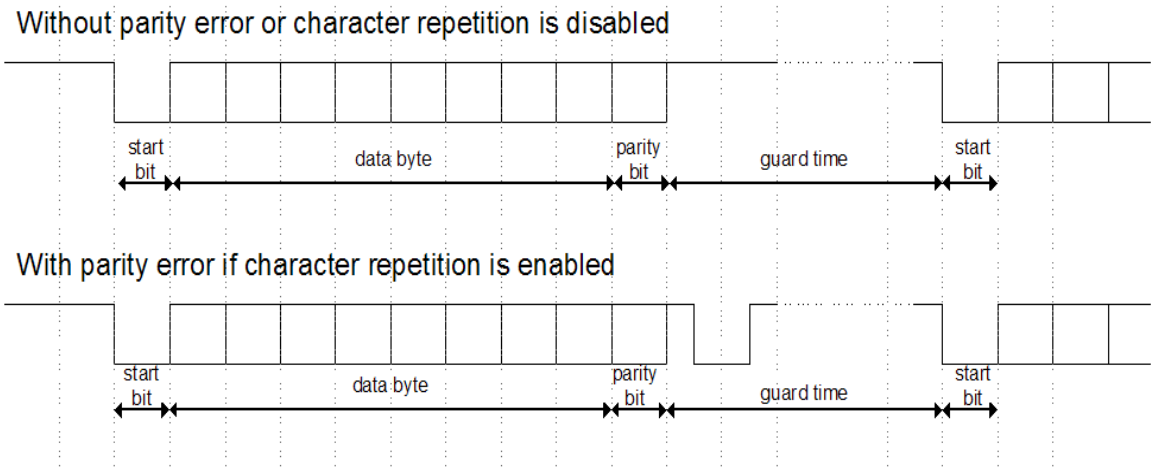

Figure 10.4 T=0 Mode Character Transmission and Repetition Diagram

Note: Timing is measured in etus. 1 etu = time to transmit 1 bit. The default etu is equal to 372/f, where f is the clock frequency.

Table 10.1 Character Frame Format

TRANSMISSION	DEFINITION
Start Bit	The I/O signal is held low for the duration of one etu after the Guard Time before transmitting data.

Table 10.1 Character Frame Format

TRANSMISSION	DEFINITION
Data Byte	The 8 bits immediately following the start bit that represents a single character byte. The logical value of the data byte transmitted is dependent on the convention selected by TS of the ATR. Direct Convention: logical 1 equals VCC and bits are transmitted LSB first. Inverse Convention: logical 0 equals VCC and bits are transmitted MSB first. **Note:** Data received is interpreted according to the encoding convention selected by the ICC.
Parity Bit	The parity bit is used for error detection. It is used to provide even parity, operating on 1 and 0 as defined by the convention. The parity bit itself is also represented with the same polarity as the data field, according to the selected encoding convention.
Guard Time	The Guard Time is defined as the time between the transmission of the parity bit and the next start bit transmitted. During this time, both the Transmitter and Receiver release the bus. Only the Receiver is permitted to pull the bus low during this time (in all except T=1) to indicate a parity error has occurred. Guard time = minimum Guard Time + Extra Guard Time (N); for $0 \leq N \leq 254$ Guard time = minimum Guard Time; for N=255. T=0 (including ATR and PPS) requires a minimum Guard Time of 2 etus. T=1 requires a minimum Guard Time of 1 etu. The minimum Guard Time is determined by whether T=0 or T=1 Mode is chosen in the Protocol Mode Register. Extra Guard Time (N) is programmable from 0 to 254 etus, as requested by the card in the ATR message. The default value is 0. The value of N received in the ATR should be directly programmed in the EGT Register.

10.5 Clocking and Baud Rate Generation

The frequency of the **SCx_CLK** signal to the ICC, and the rate at which bits are transmitted and sampled, are determined from the frequency of sc1_clk clock, which is a divided version of 48 MHz clock.

No other clock frequency is available in the SEC1110 and SEC1210.

10.5.1 Clock Rate Generation

The internal clock rate generator determines the frequency of the clock to be provided to the ICC on the **SCx_CLK** pin. This is expressed in the least-significant 6 bits of the SC_CLK_DIV Register as a divisor on the system clock. To find the correct value, the Fi value is read from the card, and Fmax is determined. The divisor is chosen such that **SCx_CLK** is the highest possible frequency without violating the Fmax parameter. The frequency of the clock to the Smart Card blocks is selected to be the minimum required to satisfy **SCx_CLK** frequency and the etu rate. This is done to lower dynamic power dissipation of the block.

Frequency of clock to Smart Card 1 block is F_{sc1_clk} = 48 MHz / SC1_CLK_DIV.

Frequency of **SC1_CLK** pin = F_{sc1_clk} / DIVISOR[4:0]

10.5.2 etu Rate Generation

The internal Baud Rate Generator (BRG) sets the duration of an etu (bit time). In the ATR message from the ICC, a divisor term (F) and a multiplier term (D) come from two 4-bit values Fi and Di. (If the ICC does not provide these values, the default is Fi=1 and Di=1, which specify a simple division by 372). The Fi and Di values are specified relative to the **SCx_CLK** frequency. But within SEC1110 and SEC1210, this must be translated to a simple divisor of the system clock.

There are two components to this divisor: a Sampling Mode and a Divisor Latch value (DL). The divisor latch value is held as a 16-bit value in the SC_DLL/SC_DLM register pair. The sampling mode is contained in the most-significant two bits of the SC_CLK_DIV Register.

The value in the DLL/DLM registers is interpreted according to the separate Sampling Mode, held in the most-significant two bits of the SC_CLK_DIV Register. The sampling mode is a pre-scaler and one of three valid settings:

 © 2013 Microchip Technology Inc.

- 00b : prescaler of 31
- 10b : prescaler of 16
- 01b : no prescaler. The divisor directly specifies the etu rate in units of the sc1_clk clock, and each bit is sampled directly by that clock. This form gives better accuracy. Also, even in a non-standard application, it is not allowed to specify fewer than 16 sample times per etu.

For example assume during ATR,TA bits 8~5 = 0010b (Fi=558), and bits 4~1 = 0011b (Di=4) then Fmax = 6 MHz, and the desired divisor = 139.5.

This means:

- Fmax = 6 MHz (based on Fi)
- Desired divisor = 558/4 = 139.5

Desired baud rate = 4.8 MHz/139.5 = 34408.6 bps. This means based on a 48 MHz clock the divisor latch value must be: 48 MHz/34408 = 1395. To set the **SCx_CLK** frequency close to Fmax, then **SCx_CLK** divisor (DIVISOR[4:0]) must be set to 48 M/4.8 M = 10.

The single bit error due to the terminal's sampling rate = (1 / 48 MHz) / (1 ETU) = (1/48e6) / (1/34408.6) = 0.071%. The error accumulated over a byte (starting from START bit, 8 data bits, parity bit, pause sample) = 10 * 2% = 20%.

The maximum error allowed per bit is determined by maximum rise/fall times (8%), minimum sampling time (0.2 etu, i.e., 20%), and maximum clock jitter (1% p-p).

When the Receiver samples, the maximum allowed error per bit = 0.2 etu/10 = 20.0% /10 = 2.00%

For some of the Fi/Di ratios, lower power consumption can be achieved by reducing the Smart Card block frequency, while maintaining the maximum line rate. This requires operating within the maximum allowed error rate per bit.

10.5.3 Recommended etu Rates and Settings

Table 10.2 lists the valid etu rates supported, and the recommended settings of the DL divisor (in the DLL/DLM registers) and the sampling field of the CLK Register that are used to select them.

The settings shown are for the maximum block frequency (48 MHz, i.e., **SCx_CLK_DIV**=1) to the Smart Card block to reduce error to a minimum.

Table 10.2 Recommended Settings for Valid TA1 ETU Rates

FI (DEC)	DI (DEC)	FI/DI (REAL)	SAMPLING FIELD (BINARY)	SCLK (ACTUAL) MHZ	DL DIVISOR VALUE (DECIMAL)	BAUD RATE (BITS/SEC)	BIT ERROR (%)
0	1	372	01	4.8	3720	12903.23	0.00%
0	2	186	01	4.8	1860	25806.45	0.00%
0	3	93	01	4.8	930	51613.90	0.00%
0	4	46.5	01	4.8	465	103226.81	0.00%
0	5	23.25	01	4.8	233	206008.58	0.22%
0	6	11.625	01	4.8	116	413793.10	-0.22%
0	7	5.813	01	4.8	58	827586.21	-0.22%
0	8	32	01	4.8	31	154838.71	0.00%
0	9	18.6	01	4.8	186	258064.52	0.00%
1	1	372	01	4.8	3720	12903.23	0.00%
1	2	186	01	4.8	1860	25806.45	0.00%
1	3	93	01	4.8	930	51613.90	0.00%
1	4	46.5	01	4.8	465	103226.81	0.00%

Table 10.2 Recommended Settings for Valid TA1 ETU Rates

FI (DEC)	DI (DEC)	FI/DI (REAL)	SAMPLING FIELD (BINARY)	SCLK (ACTUAL) MHZ	DL DIVISOR VALUE (DECIMAL)	BAUD RATE (BITS/SEC)	BIT ERROR (%)
1	5	23.25	01	4.8	233	206008.58	0.22%
1	6	11.625	01	4.8	116	413793.10	-0.22%
1	7	5.813	01	4.8	58	827586.21	-0.22%
1	8	31	01	4.8	31	154838.71	0.00%
1	9	18.6	01	4.8	186	258064.52	0.00%
2	1	558	01	4.8	5580	8602.15	0.00%
2	2	279	01	4.8	2790	17204.30	0.00%
2	3	139.5	01	4.8	1395	34408.60	0.00%
2	4	69.75	01	4.8	698	68767.91	0.07%
2	5	34.875	01	4.8	349	137535.82	0.07%
2	6	17.438	01	4.8	174	275862.07	-0.22%
2	7	8.719	01	4.8	87	551724.14	-0.22%
2	8	46.5	01	4.8	465	103225.81	0.00%
2	9	27.9	01	4.8	279	172043.01	0.00%
3	1	744	01	4.8	7440	6451.61	0.00%
3	2	372	01	4.8	3720	12903.23	0.00%
3	3	186	01	4.8	1860	25806.45	0.00%
3	4	93	01	4.8	930	51612.90	0.00%
3	5	46.5	01	4.8	465	103225.81	0.00%
3	6	23.25	01	4.8	233	206008.58	0.22%
3	7	11.625	01	4.8	116	413793.10	0.22%
3	8	62	01	4.8	620	77419.35	0.00%
3	9	37.2	01	4.8	372	129032.26	0.00%
4	1	1116	01	4.8	11160	4301.08	0.00%
4	2	558	01	4.8	5580	8602.15	0.00%
4	3	279	01	4.8	2790	17204.30	0.00%
4	4	139.5	01	4.8	1395	34408.60	0.07%
4	5	69.75	01	4.8	698	68767.91	0.07%
4	6	34.875	01	4.8	349	137535.82	0.07%
4	7	17.438	01	4.8	174	275862.07	-0.22%
4	8	93	01	4.8	930	51612.90	0.00%

© 2013 Microchip Technology Inc.

Table 10.2 Recommended Settings for Valid TA1 ETU Rates

FI (DEC)	DI (DEC)	FI/DI (REAL)	SAMPLING FIELD (BINARY)	SCLK (ACTUAL) MHZ	DL DIVISOR VALUE (DECIMAL)	BAUD RATE (BITS/SEC)	BIT ERROR (%)
4	9	55.8	01	4.8	558	86021.51	0.00%
5	1	1488	01	4.8	14880	3225.81	0.00%
5	2	744	01	4.8	7440	6451.61	0.00%
5	3	372	01	4.8	3720	12903.23	0.00%
5	4	186	01	4.8	1860	25806.45	0.00%
5	5	93	01	4.8	930	51612.90	0.00%
5	6	46.5	01	4.8	465	103225.81	0.00%
5	7	23.25	01	4.8	233	206008.58	0.22%
5	8	124	01	4.8	1240	38709.68	0.00%
5	9	74.4	01	4.8	744	64516.13	0.00%
6	1	1860	01	4.8	18600	2580.65	0.00%
6	2	930	01	4.8	9300	5161.29	0.00%
6	3	465	01	4.8	4650	10322.58	0.00%
6	4	232.5	01	4.8	2325	20645.16	0.00%
6	5	116.25	01	4.8	1163	41272.57	0.04%
6	6	58.125	01	4.8	581	82616.18	-0.04%
6	7	29.063	01	4.8	291	164948.45	-0.13%
6	8	155	01	4.8	1550	30967.74	0.00%
6	9	93	01	4.8	930	51612.90	0.00%
9	1	512	01	4.8	5120	9375.00	0.00%
9	2	256	01	4.8	2560	18750.00	0.00%
9	3	128	01	4.8	1280	37500.00	0.00%
9	4	64	01	4.8	640	75000.00	0.00%
9	5	32	01	4.8	320	150000.00	0.00%
9	6	16	01	4.8	160	300000.00	0.00%
9	7	8	01	4.8	80	600000.00	0.00%
9	8	42.667	01	4.8	427	112412.18	0.08%
9	9	25.6	01	4.8	256	187500.00	0.00%
10	1	768	01	4.8	7680	6250.00	0.00%
10	2	384	01	4.8	3840	12500.00	0.00%
10	3	192	01	4.8	1920	25000.00	0.00%

© 2013 Microchip Technology Inc.

Table 10.2 Recommended Settings for Valid TA1 ETU Rates

FI (DEC)	DI (DEC)	FI/DI (REAL)	SAMPLING FIELD (BINARY)	SCLK (ACTUAL) MHZ	DL DIVISOR VALUE (DECIMAL)	BAUD RATE (BITS/SEC)	BIT ERROR (%)
10	4	96	01	4.8	960	50000.00	0.00%
10	5	48	01	4.8	480	100000.00	0.00%
10	6	24	01	4.8	240	200000.00	0.00
10	7	12	01	4.8	120	400000.00	0.00
10	8	64	01	4.8	640	75000.00	0.00%
10	9	38.4	01	4.8	384	125000.00	0.00%
11	1	1024	01	4.8	4688	4687.50	0.00%
11	2	512	01	4.8	9375	9375	0.00%
11	3	256	01	4.8	18750	18750	0.00%
11	4	128	01	4.8	37500	37500	0.00%
11	5	64	01	4.8	75000	75000	0.00%
11	6	32	01	4.8	150000	150000	0.00%
11	7	16	01	4.8	300000	300000	0.00%
11	8	85.333	01	4.8	56250	56271.98	0.04%
11	9	51.2	01	4.8	93750	93750	0.00%
12	1	1536	01	4.8	15360	3125.00	0.00%
12	2	768	01	4.8	7680	6250.00	0.00%
12	3	384	01	4.8	3840	12500.00	0.00%
12	4	192	01	4.8	1920	25000.00	0.00%
12	5	96	01	4.8	960	50000.00	0.00%
12	6	48	01	4.8	480	100000.00	0.00%
12	7	24	01	4.8	240	200000.00	0.00%
12	8	128	01	4.8	1280	37500.00	0.00%
12	9	76.8	01	4.8	768	62500.00	0.00%
13	1	2048	01	4.8	20480	2343.75	0.00%
13	2	1024	01	4.8	10240	4687.50	0.00%
13	3	512	01	4.8	5120	9375.00	0.00%
13	4	256	01	4.8	2560	18750.00	0.00%
13	5	128	01	4.8	1280	37500.00	0.00%
13	6	64	01	4.8	640	7500.00	0.00%
13	7	32	01	4.8	320	150000.00	0.00%

© 2013 Microchip Technology Inc.

Table 10.2 Recommended Settings for Valid TA1 ETU Rates

FI (DEC)	DI (DEC)	FI/DI (REAL)	SAMPLING FIELD (BINARY)	SCLK (ACTUAL) MHZ	DL DIVISOR VALUE (DECIMAL)	BAUD RATE (BITS/SEC)	BIT ERROR (%)
13	8	170.667	01	4.8	1707	28119.51	0.02%
13	9	102.4	01	4.8	1024	46875.00	0.00%

Note 10.1 Some of the test equipment are not capable of operating with non-integer values of Fi/Di ratios.

10.6 16-bit General Purpose Counter

A 16-bit general-purpose down counter is located in the SC_DCL and SC_DCM register pair. Writing to these registers stores the preload value for the counter. Reading these registers will yield the current count value. Once the counter is enabled and begins counting, it will continue counting down either until it reaches 0000h or until a new preload value is written to the counter. At 0000h the counter wraps around to FFFFh and will generate the General Purpose Down Counter Interrupt.

The counter is clocked by a 10 kHz clock input (i.e., 100 µsec/lsb) derived from the system clock.

The counter loads the stored preload value and begins counting when the Counter Enable bit is set to 1. On a POR or when the Counter Interrupt Enable bit is cleared to 0, the preload value used by the counter is initialized to FFFFh. Setting the Counter Enable bit to 1 loads the current preload value. This allows software to write the preload value before enabling the counter. Therefore, when this enable bit is set to 1 the counter begins counting down from the preload value, which will be either the default preload value (FFFFh) or a programmed preload value. The Counter Enable bit is located in the LCR Register.

To write the Pre-load value:

If the counter is disabled, the SC_DCL and SC_DCM registers may be written in any order. If the counter is enabled, write the LSB first into the SC_DCL Register. Writing the MSB into the SC_DCM Register loads the pre-load value into the counter and resets the divider used to scale the clock. The counter, if enabled, begins counting down as soon as the preload value is loaded into the register and the clock is re-initialized.

To read the Count value:

Read the LSB first from the SC_DCL Register. Reading the SC_DCL Register latches the MSB of the count value into the SC_DCM Register.

10.7 T=1 Operation

In T=1 Mode, a transmission is immediately followed by received data. Therefore, when the Receiver is newly enabled (see the FCR Register), this is interpreted as meaning that the Receiver will begin accepting data only when transmission is finished. According to the various standards, the card is supposed to have a minimum turnaround delay before it starts transmitting data, but in practice the controller does not rely on that, and will accept data as soon as the last character has been transmitted.

10.7.1 Operation of Timers in T=1 Mode

Transactions between the controller and a Smart Card are performed in an exchange of data: the controller transmits a command, and the Smart Card must respond. Because the Smart Card is allowed to respond very quickly after receiving the last byte of the command, the timers must be set up before the command is sent, and software cannot

interact with the exchange until the response has been received, or a timeout has occurred. Both of these events trigger an interrupt.

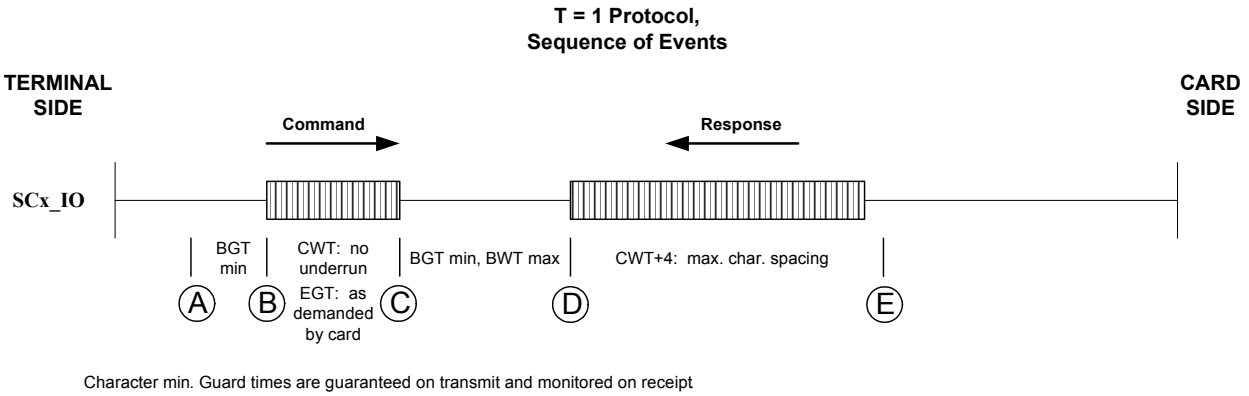

Figure 10.5 T=1 Events

In Figure 10.5 on page 76, T=1 Exchange, the sequence of events is shown in the exchange of data with the Smart Card. The operation of the controller at points A, B, C, D and E is described in the sections below.

10.7.1.1 Setup Before First T=1 Transmission

- Software directly pre-loads the Guard Timer SC_BGT Reload Register with a value based on the BGT parameter from the ATR message. The Guard Timer resolution is one etu.
- Software loads the Guard Timer SC_EGT Reload Register with a value based on the current EGT.
- Software enables the Guard Timer, which is used to inhibit transmission until it underflows.
- The initial state of the Guard Timer is waiting for a transmitted character for EGT timing. Therefore, the first time it is enabled, the first BGT value must be guaranteed by software using different means prior to progressing to point A.

10.7.1.2 Point A: Software Initiates Exchange

- Software writes the entire message to be transmitted into the SC_FIFO.
- Software writes the value 0x02 to the SC_FIFO Threshold Register, to get an interrupt when three bytes have been received in response.
- Software loads the Timeout Timer with the current BWT value, in units of 1.25 milliseconds.
- Software loads the CWT Timer with a value based on the current CWT value, and enables the CWT timer.
- Software enables both the Transmitter and the Receiver. Transmission begins after any delay imposed by the Guard Time, proceeding to point B.
- Software waits for interrupts occurring at point E.

10.7.1.3 Point B: Transmission Begins

- The first character is fetched from FIFO.
- Transmission of the first character begins.
- At each transmitted character, the Guard Timer reloads from its SC_EGT Reload Register (EGT value).
- At the end of each character, after the 1 etu of mandatory guard time, the Guard Timer counts down, and it inhibits transmission until it underflows. On underflow, the Guard Timer permits transmission and stops.
- Characters will be fetched from the FIFO and are held until the EGT value from the Guard Timer expires.

© 2013 Microchip Technology Inc.

- When the SC_FIFO becomes empty of characters to be transmitted, the SEC1110 and SEC1210 will immediately disable the Transmitter (clearing the **FTE** bit in the SC_FCR Register), and will transition to the receive phase of the exchange.

10.7.1.4 Point C: Preparation for Reception

When the entire Transmit message has been sent, the Timeout Timer begins monitoring for the first received character. When it is received, the Timeout Timer stops and does nothing else until software re-enables it. If instead the Timeout Timer underflows (at the BWT time), it stops, disables the Receiver (by clearing the **FRE** bit in the SC_FCR Register) and presents the TMO Interrupt.

In a second Mode of operation (WTX), the Timeout Timer will continue running and posting interrupts, for counting down (in software) the number of underflows of this timer before detecting an error. In this Mode, the underflow simply reloads and continues, posting the interrupt, but it does not automatically disable the Receiver. When the appropriate number of underflows has occurred, the software will place the timer back into BWT Mode, and it will then interrupt, stop, and disable the Receiver if it underflows again.

10.7.1.5 Point D: Message Being Received

At the first received start bit, the CWT Timer begins operation. This timer counts in units of etu. It has been loaded by software, before transmission, with the maximum distance between received characters. The value also includes the tolerance value (4 or 5 etu) which is required by the EMV standard. This timer is reloaded, and retriggered, on receipt of each character. If it elapses, it stops, clears the FRE bit to disable the Receiver to the SC_FIFO, and posts the CWT Interrupt request.

After the first three bytes have been received, the FIFO Threshold Interrupt is posted. Software reads three bytes from the SC_FIFO, and interprets them to determine the remaining length of the response from the card. Software re-sets the FIFO Threshold to the expected number of bytes, minus 1.

10.7.1.6 Point E: End of Message

The end of a message will be detected either by software, seeing the FIFO Threshold Interrupt, or by the CWT Timer Interrupt if not enough characters come in. (The CWT Timer event will also set the Threshold Interrupt automatically.) If too many characters are received, software will detect this from extra bytes in the SC_FIFO. If enough characters are received that the SC_FIFO overflows, the OE Interrupt is set. Both the OE and CWT Timer event disable the Receiver from placing any more characters into the SC_FIFO, by clearing the **FRE** bit in the FIFO Control Register.

10.8 T=0 Operation

The T=0 protocol is highly interactive, and there is no timeout constraint placed on the controller side. For this Mode, to support high bit rates, there are timer interactions defined for this Mode, and a pair of state machines to filter incoming data.

In T=0 Mode, unless ATR Mode is also specified, a transmission is immediately followed by received data. Therefore, when in T=0 Mode and not ATR Mode, and the Receiver is newly enabled (see the SC_FCR Register), this is interpreted as meaning that the Receiver will begin accepting data only when transmission is finished. According to the various standards, the card is supposed to have a minimum turnaround delay before it starts transmitting data, but in practice the controller does not rely on that, and will accept data as soon as the last character has been transmitted.

T=0 protocol commands specify the length of the expected response from the card. Therefore, software can be interrupted once by the FIFO Threshold Interrupt, when the entire expected message has been received, or when it has been ended prematurely by the card (Timeout Timer [WWT] error, EOM Interrupt for early SW1/SW2 presentation, or Parity error).

10.8.1 T=0 Timer Operation

In T=0 Mode, the Guard Timer will be used to guarantee the DGT requirement (turnaround Guard Time) when beginning transmission, and to insert the Extra Guard Time (EGT) delay between characters. DGT and EGT are not monitored when receiving from the card.

As when beginning T=1 Mode, the Guard Timer is not effective until at least one character has been transmitted or received. Therefore, when software enables the Guard Timer for the first time, it must guarantee by other means that the DGT Guard Time has elapsed before enabling the Transmitter.

In T=0 Mode, the Timeout Timer will be used to monitor the card's performance relative to WWT, which defines both the maximum allowed turn-around time in a card's response, and the maximum allowed spacing between characters

while the card is transmitting. In this Mode, the Timeout Timer will start on the last transmitted character, will reload and continue on each received character, but will post an interrupt, disable the Receiver and stop if it underflows.

The minimum character Guard Time (2 etu) on transmission will be guaranteed by the fact that T=0 Mode is selected in the Protocol Mode Register. On transmission, the guard period will be monitored only for a Parity Error response from the Smart Card, and not for any other form of interference.

10.9 T=0 Byte Filtering

There is a new consideration regarding FIFO space. The Smart Card may insert NULL characters at various points in the communication, whose purpose is to reset the Timeout Timer (being used for WWT). Also, there are an unpredictable number of INS bytes, which signal when a card is prepared to transfer only one byte instead of the whole remaining block. A pair of state machines are provided to filter out these extra bytes in a T=0 exchange, thus ensuring that no valid exchange will ever overflow the SC_FIFO.

Both state machines filter only bytes that are being received from the card, but they are called Incoming and Outgoing based on the nature of the command being executed. The direction is defined relative to the card, so that Outgoing means reading data out of the card, and Incoming means writing data into the card.

The special procedure bytes are those bytes sent by the card that are not data. These are:

- NULL, encoded as 0x60, which is used as padding to reset the WWT timing monitor
- SW1, encoded as 0x61-0x6F and 0x90-0x9F. This is the first byte of status, which flags the end of a transfer. It is always followed by one byte, SW2, which completes the status indication and is the last byte of the transaction.
- INS and $\overline{\text{INS}}$ are used as flags, and represent a true (INS) and complemented ($\overline{\text{INS}}$) echo of the Instruction byte (sent by the terminal) that is being executed by the card. The encodings of INS and $\overline{\text{INS}}$ are such that they can never be confused with NULL or SW1.

10.9.1 T=0 Outgoing Byte Filter

The first (outgoing) state machine is used when a command is being issued that reads data from the card. In this scenario, the card responds on receipt of the command, and it does not stop transmitting until the entire requested block of data has been transferred. The format of this response is variable depending on the card's performance. The Outgoing state machine, then, filters out the variable portions of this response, leaving only the outgoing data and status, which will be of a predictable maximum size of 258 bytes (256 bytes of information data plus the status bytes SW1 and SW2). If the firmware requires a maximum packet size greater than 258 bytes (CCID firmware needs 259), then firmware can split the packet.

To operate this filter, software specifies in the register set the number of data bytes it intends to read from the Smart Card, and the INS byte value that it intends to send. It then enables the state machine with the dedicated Enable bit (OSME, in the Protocol Mode Register), and transmits its command. When the transmission is completed (as determined by the Message Length Register used for transmission), the state machine becomes active. As the card responds, any NULL characters at appropriate places are detected and discarded, and all INS and $\overline{\text{INS}}$ procedure bytes are discarded, leaving only the data bytes and the two status bytes (SW1 and SW2) to be placed into the SC_FIFO.

© 2013 Microchip Technology Inc.

A typical sequence of events for a T=0 outgoing exchange is shown in the figure below.

T=0 Protocol, Sequence of Events
(Outgoing Data from Card)

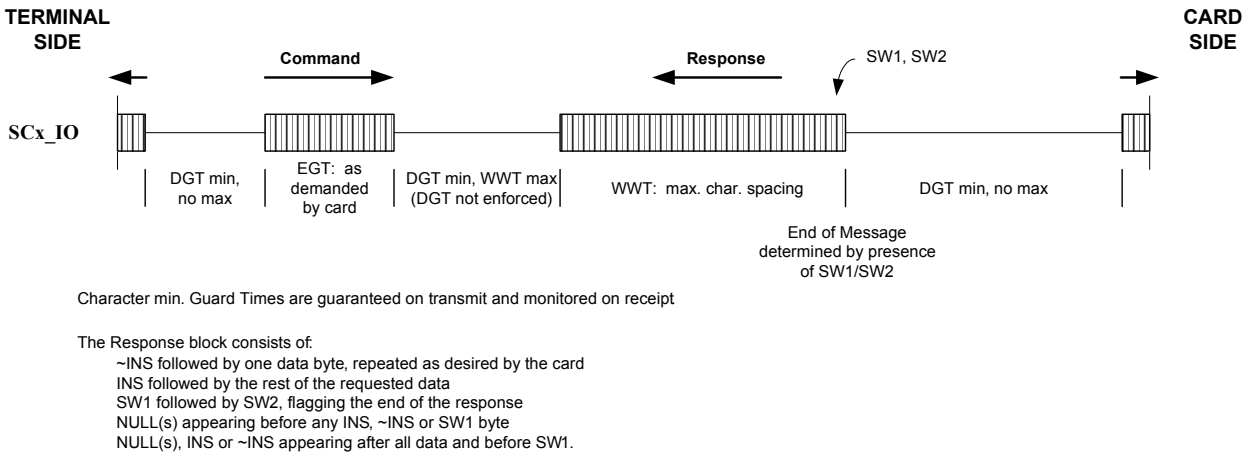

Figure 10.6 Outgoing T=0 Command Sequence

A state diagram for the Outgoing Byte Filter is shown in Figure 10.6 on page 79. It accepts from software:

- A 9-bit count of the number of data bytes expected from the card, initialized by software to be in the range of 1 to 256 (00h written by software to the 8-bit SC_FLL Register sets the count to 256, not zero). This number of data bytes are collected and placed into the FIFO, followed by the SW1 and SW2 bytes, for a total of 258 bytes maximum.
- The INS byte being sent to the card. This defines the encodings of the INS and $\overline{\text{INS}}$ procedure bytes.
- An enable bit (OSME, in the Protocol Mode Register) for this specific state machine. When the Enable bit is turned on, the state machine will wait for the Transmitter to finish transmitting the command to the card, then it will start filtering the response.

When the state machine detects the end of a message, or a fatal error in communication, it activates the EOM Interrupt (End of Message), and disables the Receiver. If it is terminating communication because of an error in encoding, it will also set the CV (Code Violation) error status bit. If the Timeout Timer (measuring WWT) underflows during a received message, it will also disable the Receiver and stop the state machine. The EOM Interrupt will be posted in this case, and also the TMO Interrupt from the Timeout Timer itself.

As characters are received, the least-significant 8 bits of count may be examined by reading the SC_FLL Register. The value 00h, which might mean 0 or 256, can be interpreted by looking at the FIFO count to determine whether any characters have been received.

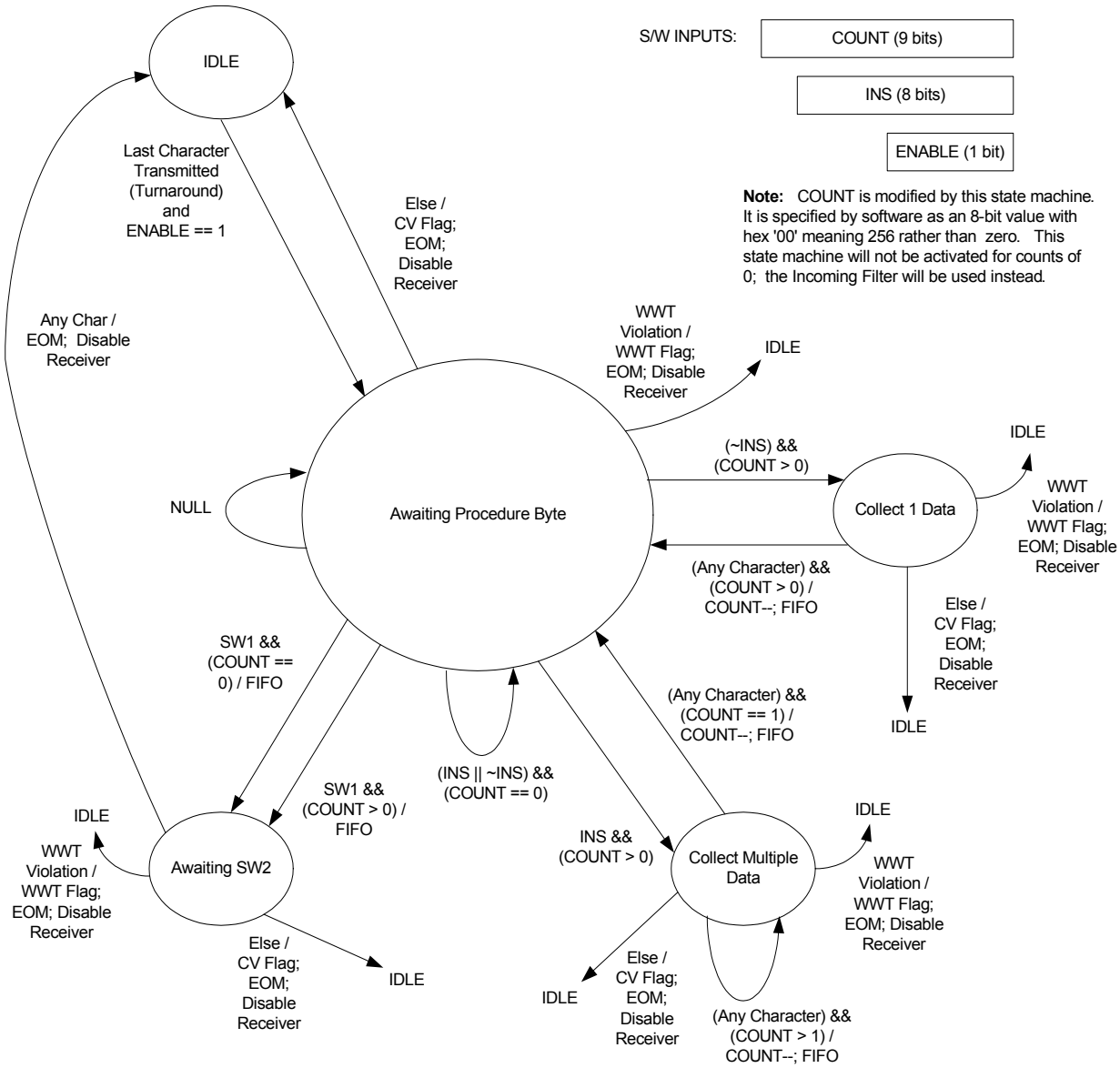

Figure 10.7 T=0 Outgoing Byte Filter State Diagram

10.9.2 T=0 Incoming Byte Filter

This state machine is active when a command is being executed that writes data into the card. In spite of this, the bytes being filtered are only the responses that are coming from the card. When the controller is intending to transmit data, the state machine is simpler, because there are fewer ways that the Smart Card can respond. The command is executed in multiple exchanges between the controller and the card, and as far as the controller hardware is concerned, each of these (starting with transmission of a 5-byte command header from the controller) is an independent exchange. See Figure 10.8 for an example of an T=0 incoming command sequence.

A state diagram for the Incoming Byte Filter is shown in Figure 10.9 on page 82.

When expecting an INS or $\overline{\text{INS}}$ response, this filter will remove only initial NULL bytes from the Smart Card's responses, leaving the INS or $\overline{\text{INS}}$ response byte in the FIFO for software to interpret. When expecting an SW1 byte (when the count of data to be transferred is zero), any initial NULL, INS or $\overline{\text{INS}}$ byte is discarded. Software must provide a valid Count value, along with INS and the Enable bit (**ISME**, in the Protocol Mode Register), for each Transmit/Receive exchange of information in the command sequence.

© 2013 Microchip Technology Inc.

The Incoming byte filter does not interpret the Count in the same way as the Outgoing byte filter. For the Incoming byte filter, a value of 00h provided by software in the SC_FLL Register actually means zero, and the maximum valid count value is 254 for T=0 Incoming traffic. The SC_FLL Register is not changed except by software, so there is no ambiguity in values as there is when software reads the SC_FLL Register under the Outgoing filter.

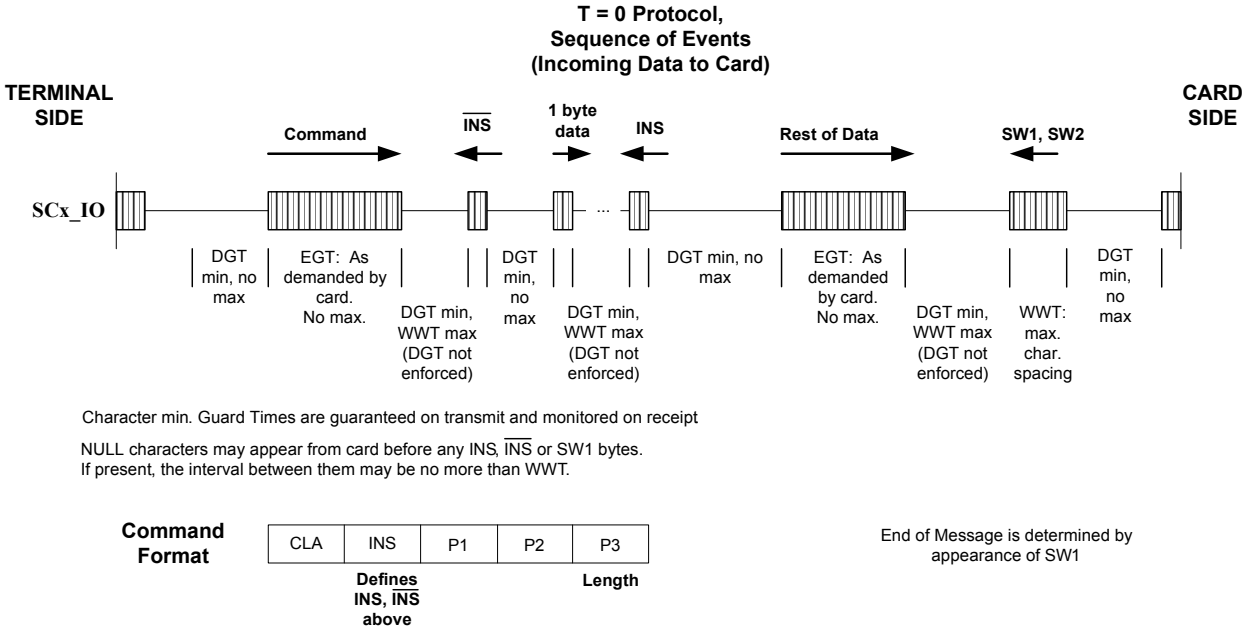

Figure 10.8 Incoming T=0 Command Sequence Example

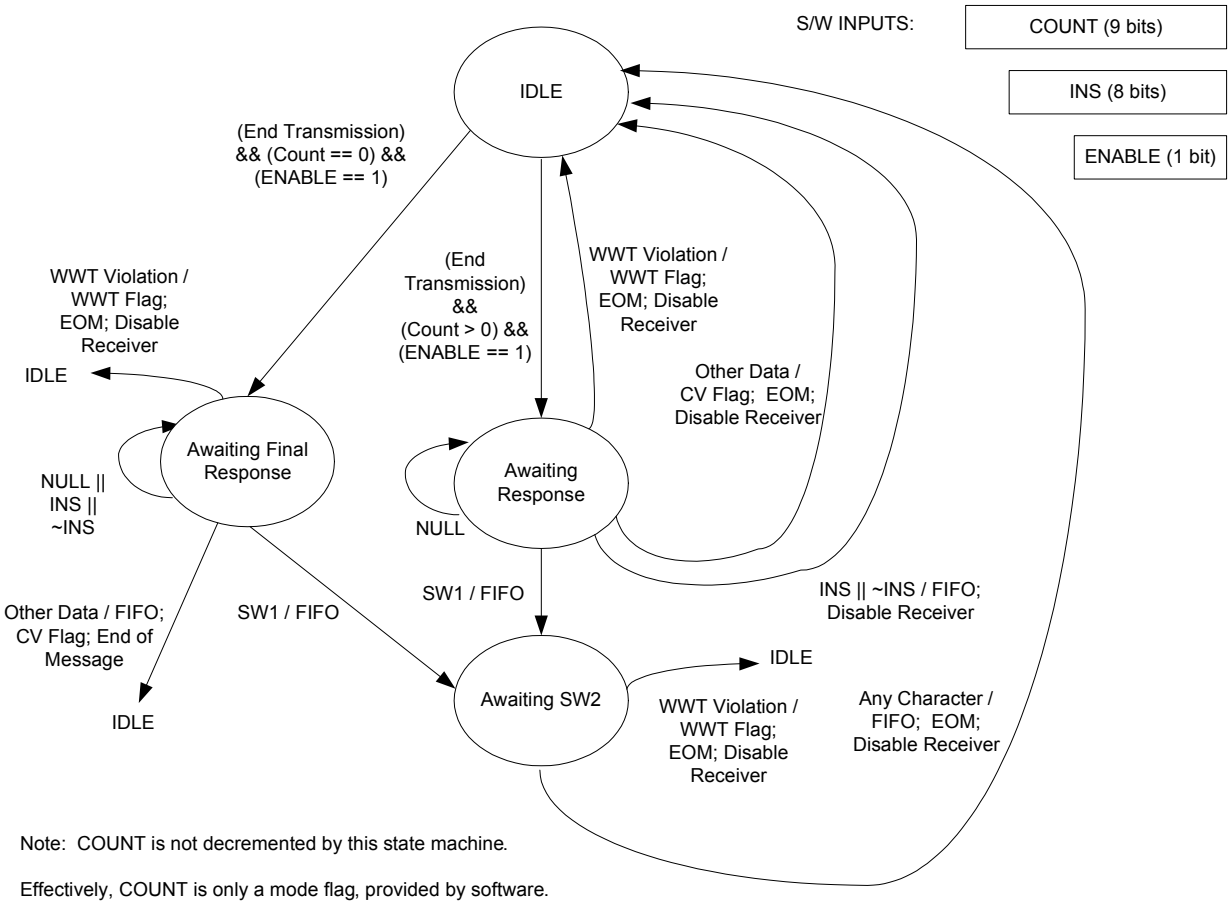

Note: COUNT is not decremented by this state machine.

Effectively, COUNT is only a mode flag, provided by software. Software provides non-zero here unless SW1 is expected. If it is 0, INS and ~INS are also discarded, as well as NULL.

If SW1 occurs when it is not expected (COUNT>0), then it and SW2 are both received. Software must parse the SW1 byte to determine that it expects an SW2 byte from the FIFO.

Figure 10.9 T=0 Incoming Byte Filter State Diagram

© 2013 Microchip Technology Inc.

10.9.3 ATR Reception

The Answer to Reset (ATR) sequence is a series of bytes sent by the Smart Card in response to the Reset signal from the controller. Certain timers and specialized circuitry are used in receiving the ATR information.

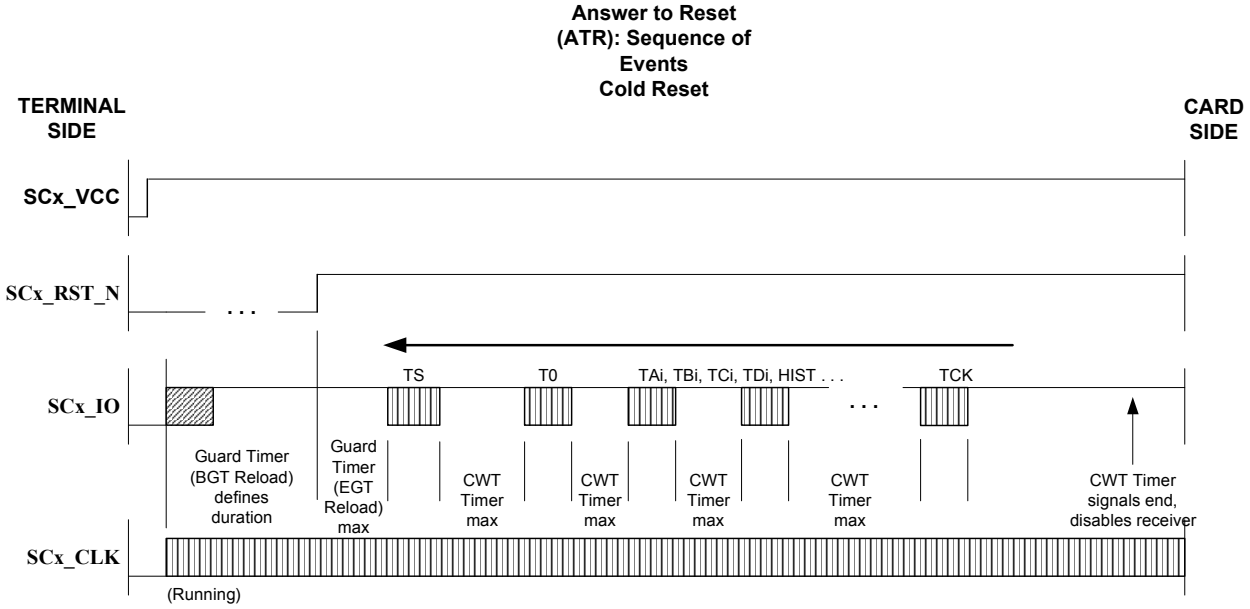

Figure 10.10 ATR Sequence, Cold Reset

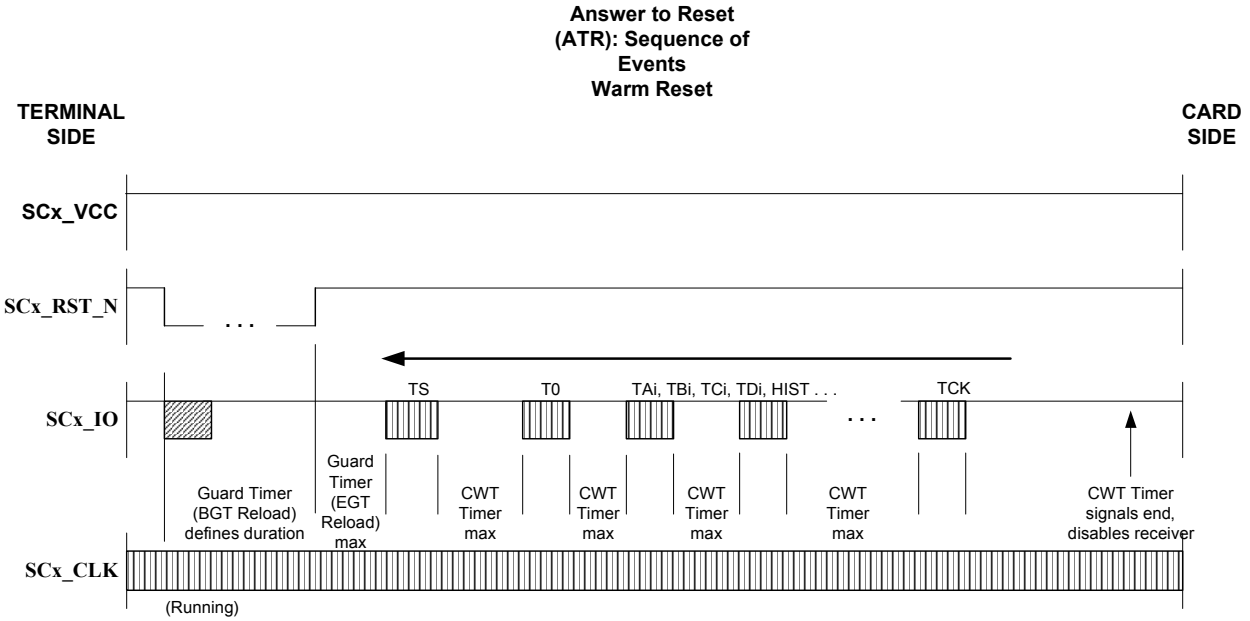

Figure 10.11 ATR Sequence, Warm Reset

To anticipate the ATR sequence, the controller is placed by software into a special Mode called ATR. In the ATR Mode, two of the timers are in a special Mode to validate the timing of the sequence. Figure 10.10 shows the sequence of events in a Cold Reset, where power has been removed from the card. Figure 10.11 shows the sequence of events in a Warm Reset, where power is maintained, but a new **SCx_RST_N** pulse is applied to reset the card.

In preparing for the ATR sequence, the software must establish the default etu time: the equivalent of TA1=0x11, or 372 periods of the selected **SCx_CLK** frequency.

At the beginning of the sequence, the two reload registers of the Guard Timer determine the duration of the Reset pulse and measure the response time from the Smart Card to enforce a valid delay. After the first character, the CWT Timer starts, and counts the maximum amount of time the card is allowed to spend between characters. When the CWT Timer expires, an interrupt (CWT) is sent to the software, which can then read the message from the SC_FIFO. This event will also set the FIFO Threshold Interrupt active. Software will be able to parse the message and determine whether it is complete.

Software may, rather than using the CWT Timer for this purpose, set thresholds for the SC_FIFO such that it is periodically interrupted either by the individual characters or by larger expected fields. The CWT Timer will still be useful as an error indication.

The first byte (TS) is interpreted by hardware. One of two values is allowed, which from that point onward determines the convention used by the card. The possible conventions used are listed below. *L* means a bit time with the **SCx_IO** pin held low, and *H* means a bit time with the **SCx_IO** pin held high.

- Direct Convention, which is signalled by the TS bit sequence LHHLHHHLLHHH. In this convention, bits of a character are sent least-significant bit first, 0 bits in the data field are represented by the Low state, and a true Even parity is used. The first byte will always appear in the SC_FIFO, in Direct/Indirect convention as was seen on the **SCx_IO** pin. Subsequent bytes will be decoded as per the convention and loaded into the SC_FIFO. The first byte will appear as 0x3B in the SC_FIFO in Direct convention.
- Inverse Convention, which is signalled by the TS bit sequence LHHLLLLLLHHH. In this convention, bits of a character are sent most-significant bit first, 0 bits in the data field are represented by the High state, and an inverted Even parity bit is used (appearing as a parity error to any circuit reading it according to the Direct convention). This byte will appear as 0x03 in the SC_FIFO.
- The Direct or Inverse Convention will be selected automatically by hardware after receiving the TS byte after a rising edge on the **SCx_RST_N** signal. This setting will be reported in the TSM bit of the Protocol Status Register, and will be used to interpret all characters until the next **SCx_RST_N** pulse. If any TS value other than the two above is seen, the Receiver will be disabled, and the **CV** bit (Code Violation) will be set in the PRIP Register to indicate the error. If a FIFO threshold larger than one byte was selected, the eventual CWT Timer Interrupt will both set the FIFO Threshold Interrupt and alert the software to look at the error flag.

While power is not applied to the card, the terminal is required to hold the **SCx_RST_N**, **SCx_CLK** and **SCx_IO** pins low (not floating). When power is first applied to the card (a Cold Reset, shown in Figure 10.10 "ATR Sequence, Cold Reset" on page 83), the **SCx_RST_N** pin must be held low until **SCx_CLK** begins running. **SCx_IO** must rise to its idle state (high) after power has been applied, and no later than 200 cycles of **SCx_CLK**. The **SCx_RST_N** pin must then be set high between 108 and 120 default etu times after the clock starts.

When the card has already been initialized from a Cold Reset, it may be reset without removing power (Warm Reset, as shown in Figure 10.11 "ATR Sequence, Warm Reset" on page 83). In this case, the clock keeps running, **SCx_IO** should remain high, and the time range of 108 to 120 default etu times applies to the width of the **SCx_RST_N** pulse.

10.9.4 Guard Time Algorithm

A special case occurs under some circumstances, in which software thinks that an exchange is finished, but the card does not, and keeps transmitting characters. One such case is when a parity error occurs in a T=1 message. The SC_FIFO stops receiving characters after the faulty one (for diagnostic purposes, to indicate the character with the error), and signals to software an End of Message with an error.

In this circumstance, it is necessary that any transmission commanded by the software (e.g., the packet complaining about the parity error) must wait until the card is finished transmitting. However, if the card is misbehaving and does not stop transmitting, then software must be informed of this error so that the card can be deactivated. The Guard Time algorithm hardware serves both of these purposes.

A specific error flag is provided (TF), and a timing register (GSR), to support this feature. The feature is not optional, and so it cannot be disabled.

The Guard Spacing Register (GSR) is programmed by software with the expected maximum spacing between received characters in units of etus, including Extra Guard Time EGT. (This is required in a separate register by the implementation). The value in the GSR is interpreted as a maximum amount of time allowed from start bit to start bit, and so it must be at least 12 etus.

As each new character is received within this window, an internal counter (CPT) is decremented once. This counter restarts, starting from the maximum legal number of characters in a packet (258 for T=0, 259 for T=1) as soon as

 © 2013 Microchip Technology Inc.

characters start being received in an exchange, regardless of whether the Receiver remains enabled or not, and regardless of errors. The CPT counter reloads and stops when no character is received within the GSR window.

If software attempts to transmit while this counter is still active, the transmission is inhibited and held pending. If, however, while a transmission is pending, the CPT count underflows, then the transmission is abandoned, and the TF error (Transmit Failure) is posted, which is an interrupt. See Figure 10.12 for this case. Note that, in T=0 Mode, the Incoming or Outgoing filter remains applied as selected, so that any procedure bytes (NUL, INS, and INS) are not counted.

If there is no such error, then, after the vacant window time has passed, the Transmitter waits for the Designated Guard Time amount (DGT or BGT) and begins transmitting. See Figure 10.13 "Guard Time Algorithm, No Error, Transmit Held" on page 85 for this case.

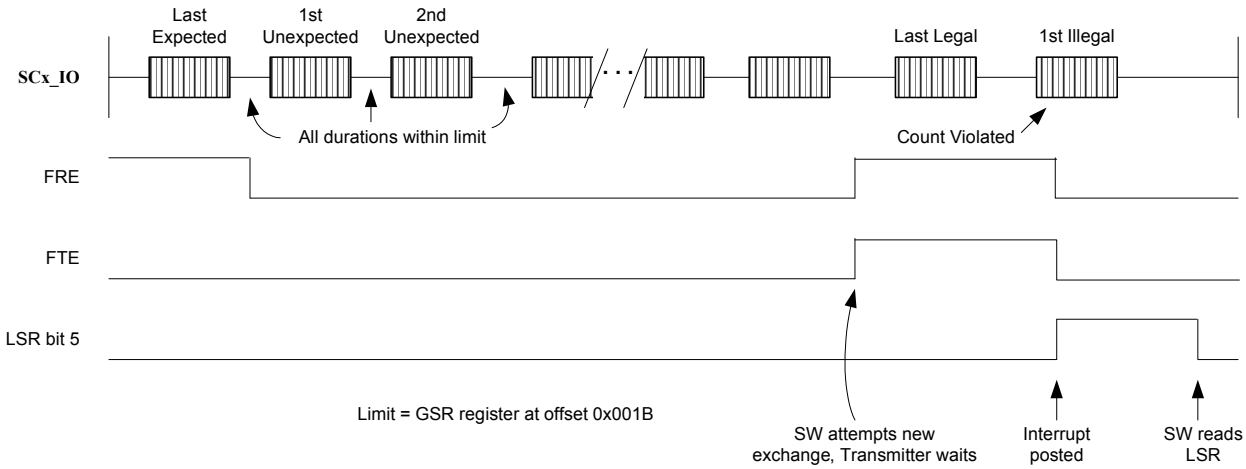

Error: Transmit attempted and Card has been transmitting too long.

Figure 10.12 Guard Time Algorithm with Error, Transmit Abandoned

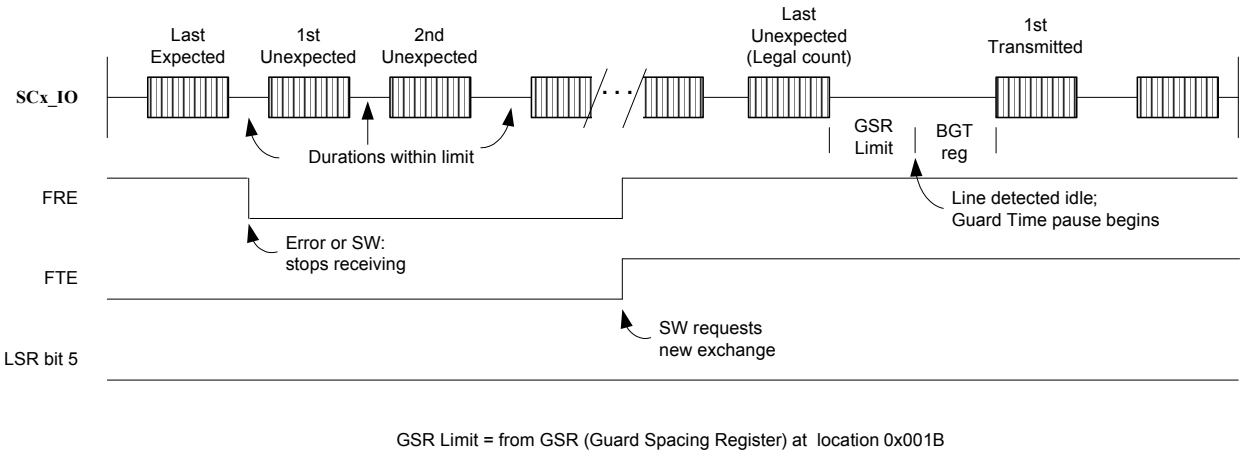

Most Normal Case: early cut-off (e.g., T=1 Parity Error).
Transmitted response is delayed until Card is idle.

Figure 10.13 Guard Time Algorithm, No Error, Transmit Held

10.9.5 Card Power for Smart Card Interface

The pins on this interface are powered by **SCx_VCC**. If the Smart Card interface is not used, the **SCx_VCC** can be used to implement variable voltage GPIOs. The control for the regulator is in the CLK_PWR block.

The power to the Smart Card should not be turned on till a card is detected. When there is no card present, enable the synchronous Smart Card interface, turn all the bits to inputs, and enable the pull-down resistors. This will ensure that the output signals are held at ground. Once a card is detected, enable the power first, wait at least 1 mS, then enable the asynchronous or synchronous interface as necessary.

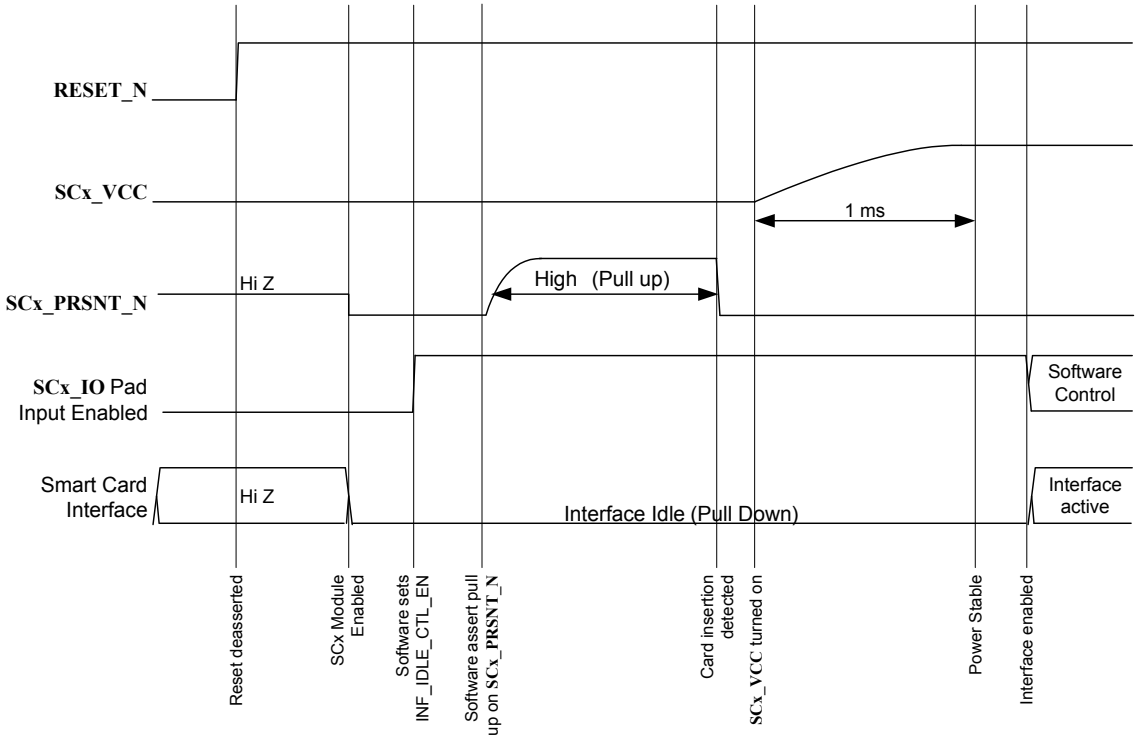

Figure 10.14 Smart Card Power-Up

10.9.6 LED Control for Smart Card Interface

The Smart Card LED can be driven in one of three ways. It can be driven directly by the Smart Card IP in asynchronous Mode. This Mode is selected by selecting the GPIO5 to be Auxiliary Port A Mode (**SC_LED_ACT_N** bit in the GPIO block). When running in synchronous Mode firmware must control the LED directly by controlling SC_LEDC Register. The LED can either be set to blink automatically, or run under full manual control. Blinking is controlled by the LED1_GPIO1_CTL. Alternatively, the firmware can set the GPIO5 to be in GPIO Mode, and can control the LED directly by writing to GPIO_POR0_OUT bit 5. Full manual is done by controlling the register directly.

10.9.7 Enabling the Synchronous Smart Card Interface

The synchronous interface is enabled through the Control Register in the Wrapper Block.

 © 2013 Microchip Technology Inc.

10.10 Register Map

Table 10.3 Smart Card Memory Map

(0X9000-0X93FF)		SMART CARD CONTROL REGISTER
ADDRESS	**NAME**	**DESCRIPTION**
0x9000-0x90FF	Smart Card 1 registers	Base address of Smart Card 1 registers. The register offsets from this base address are defined in Table 10.5 on page 88.
0x9100-0x92FF	Smart Card SC_FIFO	Common SC_FIFO for Smart Card 1 and 2. The **SC1_SC_FIFO_DIS** bit in the SC_CTL Register controls which of the Smart Card controllers are using the SC_FIFO. In the SEC1110, the SC_FIFO is controlled only by Smart Card 1 controller.
0x9300-0x90FF	Smart Card 2 Registers	Base address of Smart Card 2 registers. The register offsets from this base address are defined in Table 10.5, “Smart Card Control Register,” on page 88.

The Smart Card Controller Register offsets to the base addresses are defined below.

Table 10.4 Smart Card1, 2 Controller Registers

OFFSET ADDRESS	NAME	R/W	DESCRIPTION	PAGE
0x0000	SC_TBR_RBR	R/W	8 bit FIFO Data	96
0x0001	SC_IEN	R/W	Interrupt enable	96
0x0002	SC_INT_ID	R	Interrupt ID	97
0x0003	SC_LCR	R/W	Line control	99
0x0004	SC_INTF_MON	R/W	Interface Monitor	100
0x0005	SC_LSR	R	Line status	101
0x0006	SC_BMC	R/W	Block Master Control	102
0x0007	SC_ICR	R/W	Interface Control	102
0x0008~ 0x000B	SC_DATA	R/W	32 bit FIFO Data	103
0x000C	SC_PRS	R/W	Protocol Status	103
0x000D	SC_PRIP	R/W	Protocol/Timer Interrupts Pending	104
0x000E	SC_PRIE	R/W	Protocol/Timer Interrupts Enables	105
0x000F	SC_TMS	R	Timer Status	106
0x0010~ 0x0011	SC_DLL/SC_DLM	R/W	Baud Rate Divisor	106
0x0012	SC_FCR	R/W	FIFO Control	107
0x0013~ 0x0015	SC_TOL/SC_TOM	R/W	Timeout Timer	108
0x0016 ~ 0x0017	SC_DCL/SC_DCM	R/W	Down Counter	108
0x0018 ~ 0x0019	SC_CWTL/SC_CWTM	R/W	CWT Timer reload value	109

Table 10.4 Smart Card1, 2 Controller Registers

OFFSET ADDRESS	NAME	R/W	DESCRIPTION	PAGE
0x001B	SC_GSR_MSB	R/W	Guard Algorithm Spacing Register	109
0x001C	SC_EGT	R/W	Guard Timer Reload A	110
0x001D	SC_BGT	R/W	Guard Timer Reload B	110
0x001E	SC_PRM	R/W	Protocol Mode	111
0x001F	SC_TCTL	R/W	Timer Control	111
0x0025	SC_CLK_DIV	R/W	Frequency control	112
0x0026	SC_CFG	R/W	SC Configuration	112
0x0027	SC_LEDC	R/W	LED Control	113
0x0028~ 0x0029	SC_FTHL/SC_FTHM	R/W	FIFO Threshold	114
0x002A~ 0x002B	SC_FCL/SC_FCM	R	Number of bytes in FIFO	114
0x002C	SC_FLL	R/W	Filter Length	115
0x002D	SC_FINS	R/W	Filter INS Byte	115
0x0030 ~ 0x0035	SC_TEST3	R/W	Test Registers	116
0x0080	SC_CTL	R/W	SC Control Register	88
0x0081	PAD_CTL_SC	R/W	Pad current control	90
0x0090	SC_Sync_RST	R/W	Synchronous Mode Reset	90
0x0094	SC_Sync_CLK	R/W	Synchronous Mode Clock	91
0x0098	SC_Sync_FCB	R/W	Synchronous Mode FCB	91
0x009C	SC_Sync_SPU	R/W	Synchronous Mode SPU	92
0x00A0	SC_Sync_IO	R/W	Synchronous Mode Data	93
0x00A4	SC_Sync_ALL	R/W	Synchronous Mode ALL	93

10.11 Smart Card Wrapper Control Registers

Table 10.5 Smart Card Control Register

SC_CTL (0X0080- RESET=0X00)			SMART CARD CONTROL REGISTER
BYTE	**NAME**	**R/W**	**DESCRIPTION**
7	INTERFACE_ENABLE	R/W	If the interface is not enabled, the interface pins are tri-stated.

© 2013 Microchip Technology Inc.

Table 10.5 Smart Card Control Register (continued)

SC_CTL (0X0080- RESET=0X00)			SMART CARD CONTROL REGISTER
BYTE	**NAME**	**R/W**	**DESCRIPTION**
6	INF_IDLE_CTL_EN	R/W	Enable automatic control of interface idle condition. Setting this bit will automatically drives **SCx_CLK**, **SCx_RST_N**, **SCx_C4**, **SCx_C8** pins to logic LOW and **SCx_IO** pin to a value programmed in INF_IDLE_IO_VAL bit when **INTERFACE_ENABLE**=0. When **INTERFACE_ENABLE**=1 all IOs are controlled by the SCC, where the state of the **SYNC_MODE_SEL** does not matter.
5	Reserved	R	Always read as 0
4	INF_IDLE_IO_VAL	R/W	This bit indicates the value to be driven on the SCx_IO line when INF_IDLE_CTL_EN bit is set. This bit is available in SEC1110/SEC1210
3	SC1_SC_FIFO_DIS	R/W	This bit indicates if Smart Card 1 is using the SC_FIFO. 0: SC1 using SC_FIFO 1: In SEC1210, SC2 is using SC_FIFO. In SEC1110 this bit is a don't care.
2	SC_SLOW_CLK	R/W	Must be set when **SCx_CLK** is running under 10 MHz. This bit is not used in the SEC1110/SEC1210 parts.
1	SC_MODE	R/W	Forces the pads into a low current Smart Card Mode with increased hysteresis. This applies to all Smart Card pins except **SC_CLK.** This bit is not used in the SEC1110/SEC1210/SEC1300 parts.
0	SYNC_MODE_SEL	R/W	Setting this bit put the Smart Card interface into the synchronous Mode.

The pads **SCx_RST_N**, **SCx_CLK**, **SCx_IO**, **SCx_C4**, **SCx_C8** are controlled by the SCC block when **GPIO[4:0]** for Smart Card1 and **GPIO[18:16]** for Smart Card2 are in GPIO Auxiliary A Mode. The GPIO5 must also be in Auxiliary A Mode to support LED functionality for both Smart Cards.

The INF_IDLE_IO_EN, INF_IDLE_IO_VAL bits may be used during Smart card activation and deactivation sequence to ensure **SCx_RST_N**, **SCx_CLK**, **SCx_IO**, **SCx_C4**, **SCx_C8** pins are low even in the presence of external pull-up loads.

Note: In SEC1110/SEC1210 version of the chip, the **INF_IDLE_CTL_EN** bit asserts the pull-down (67 kΩ) to the Smart Card pads, which may be insufficient to ensure V_{ol} is met in the presence of external pull-up loads. Hence the GPIO mode must be used during the activation and deactivation sequence.

10.11.1 Automatic Control of Idle Condition on Smart Card Interface

Smart Card specification requires that the interface signals be held at zero until a card is inserted, power is applied to the card, and the reset sequence is started. The **INF_IDLE_CTL_EN** bit works in conjunction with the **INTERFACE_ENABLE** bit to do this. When the interface is in the idle state, (**INTERFACE_ENABLE**=0), pull-downs are enabled, and the control signals are driven zero. As soon as the interface is enabled, (**INTERFACE_ENABLE**=1) control of IO pad signals reverts to the Smart Card Controller (SCC). See figure Figure 10.14 on page 86.

The **INF_IDLE_CTL_EN** bit asserts the pull-down (67 KΩ) to the Smart Card pads, which may be insufficient to ensure V_{OL} is met in the presence of external pull-up loads. Hence the GPIO mode must be used during the activation and deactivation sequence.

Table 10.6 Smart Card Current Control Register

PAD_CTL_SC (0X0081 - RESET=0X00)			**PAD CURRENT CONTROL**
BIT	**NAME**	**R/W**	**DESCRIPTION**
7:2	Reserved	R	Always read as 0
1:0	SEL	R/W	This register is not used.

10.12 Synchronous Interface Registers

All registers in the Synchronous Interface are byte addressable. This allows the firmware to toggle the output using byte writes without affecting any other register bits. There are five control lines associated with the interface that are controlled by five identical registers.

Each of the Synchronous Interface registers consists of two bytes, a low address byte and a high address byte.

Table 10.7 Smart Card Sync RST Control Register

SC_SYNC_RST (0X0091- RESET=0X00)			**SMART CARD CONTROL REGISTER**
BIT	**NAME**	**R/W**	**DESCRIPTION**
7:6	Reserved	R	Always read as 0
5	INPUT_EN	R/W	`1` : Input is enabled `0` : Input is disabled
4	OUTPUT_EN	R/W	`1` : Output is enabled `0` : Output is disabled
3	FAST_OPEN_DRAIN	R/W	If this bit is set, and the Mode is Output, the signal is driven low when the data is 0. When the data transitions to 1, it is actively driven high for one clock cycle before being tri-stated.
2	OPEN_DRAIN	R/W	If this bit is set, and the Mode is Output, the **SCx_RST_N** output is driven open drain; 0 are driven, 1 are tri-stated.
1	PULL_UP_EN	R/W	When set, it enables the pull-up to this pin.
0	PULL_DN_EN	R/W	When set, it enables the pull-down to this pin.
(0X0090- RESET=0X00)			
7:2	Reserved	R	Always read as 0
1	RST_IN	R	This bit reflects the state of the **SCx_RST_N** pin when select muxes are set to Smart Card Mode and synchronous Mode.
0	RST_OUT	R/W	This bit reflects the state of the **SCx_RST_N** pin when select muxes are set to Smart Card Mode and synchronous Mode.

Note: In the SEC1110/SEC1210 version, the **OPEN_DRAIN** bit is not functional. The **FAST_OPEN_DRAIN** bit can be used instead. This Anomaly 16 is fixed in later versions.

© 2013 Microchip Technology Inc.

Table 10.8 Smart Card Sync CLK Control Register

SC_SYNC_CLK (0X0095- RESET=0X00)			SMART CARD SYNC CLOCK CONTROL REGISTER
BIT	**NAME**	**R/W**	**DESCRIPTION**
7:6	Reserved	R	Always read as 0
5	INPUT_EN	R/W	1 : Input is enabled 0 : Input is disabled
4	OUTPUT_EN	R/W	1 : Output is enabled 0 : Output is disabled
3	FAST_OPEN_DRAIN	R/W	If this bit is set, and the Mode is Output, the signal is driven low when the data is 0. When the data transitions to 1, it is actively driven high for one system clock cycle before being tri-stated.
2	OPEN_DRAIN	R/W	If this bit is set, and the Mode is output, the SC_CLK output is driven open drain. 0 are driven, 1 are tri-stated.
1	PULL_UP_EN	R/W	When set, it enables the pull-up to this pin.
0	PULL_DN_EN	R/W	When set, it enables the pull-down to this pin.
(0X0094- RESET=0X00)			
7:2	Reserved	R	Always read as 0
1	CLK_IN	R	This bit reflects the state of the **SCx_CLK** pin when select muxes are set to Smart Card Mode and synchronous Mode.
0	CLK_OUT	R/W	This bit reflects the state of the **SCx_CLK** pin when select muxes are set to Smart Card Mode and synchronous Mode.

Table 10.9 Smart Card Sync FCB Control Register

SC_SYNC_FCB (0X0099)- RESET=0X00)			SMART CARD FCB CONTROL REGISTER
BIT	**NAME**	**R/W**	**DESCRIPTION**
7:6	Reserved	R	Always read as 0
5	INPUT_EN	R/W	1 : Input is enabled 0 : Input is disabled
4	OUTPUT_EN	R/W	1 : Output is enabled 0 : Output is disabled
3	FAST_OPEN_DRAIN	R/W	If this bit is set, and the Mode is output, the signal is driven low when the data is 0. When the data transitions to 1, it is actively driven high for one system clock cycle before being tri-stated.
2	OPEN_DRAIN	R/W	If this bit is set, and the Mode is output, the **SCx_C4** output is driven open drain; 0 are driven, 1 are tri-stated.
1	PULL_UP_EN	R/W	When set, it enables the pull-up to this pin.
0	PULL_DN_EN	R/W	When set, it enables the pull-down to this pin.

Table 10.9 Smart Card Sync FCB Control Register

SC_SYNC_FCB (0X0099)- RESET=0X00)			SMART CARD FCB CONTROL REGISTER
BIT	**NAME**	**R/W**	**DESCRIPTION**
(0X0098)- RESET=0X00)			
7:2	Reserved	R	Always read as 0
1	FCB_IN	R	This bit reflects the state of the **SCx_C4** pin when select muxes are set to Smart Card Mode. Synchronous or asynchronous Mode does not matter.
0	FCB_OUT	R/W	This bit reflects the state of the **SCx_C4** pin when select muxes are set to Smart synchronous Mode. Synchronous or asynchronous Mode does not matter.

Table 10.10 Smart Card Sync SPU Control Register

SC_SYNC_SPU (0X009D- RESET=0X00)			SMART CARD SPU CONTROL REGISTER
BIT	**NAME**	**R/W**	**DESCRIPTION**
7:6	Reserved	R	Always read as 0
5	INPUT_EN	R/W	`1` : Input is enabled `0` : Input is disabled
4	OUTPUT_EN	R/W	`1` : Output is enabled `0` : Output is disabled
3	FAST_OPEN_DRAIN	R/W	If this bit is set, and the Mode is output, the signal is driven low when the data is 0. When the data transitions to 1, it is actively driven high for one system clock cycle before being tri-stated.
2	OPEN_DRAIN	R/W	If this bit is set, and the Mode is output, the **SCx_C8** output is driven open drain; 0 are driven, 1 are tri-stated.
1	PULL_UP_EN	R/W	When set, it enables the pull-up to the **SCx_C8** pin.
0	PULL_DN_EN	R/W	When set, it enables the pull-down to the **SCx_C8** pin.
(0X009C- RESET=0X00)			
7:2	Reserved	R	Always read as 0
1	SPU_IN	R	This bit reflects the state of the **SCx_SPU** pin when select muxes are set to Smart Card Mode. Synchronous or asynchronous Mode does not matter.
0	SPU_OUT	R/W	This bit reflects the state of the **SCx_SPU** pin when select muxes are set to Smart Card Mode. Synchronous or asynchronous Mode does not matter.

© 2013 Microchip Technology Inc.

Table 10.11 Smart Card Sync IO Control Register

SC_SYNC_IO (0X00A1- RESET=0X00)			SMART CARD IO CONTROL REGISTER
BIT	**NAME**	**R/W**	**DESCRIPTION**
7:6	Reserved	R	Always read as 0
5	INPUT_EN	R/W	1 : Input is enabled 0 : Input is disabled
4	OUTPUT_EN	R/W	1 : Output is enabled 0 : Output is disabled
3	FAST_OPEN_DRAIN	R/W	If this bit is set, and the Mode is output, the signal is driven low when the data is 0. When the data transitions to 1, it is actively driven high for one system clock cycle before being tri-stated.
2	OPEN_DRAIN	R/W	If this bit is set, and the Mode is output, the SC_IO output is driven open drain; 0 are driven, 1 are tri-stated.
1	PULL_UP_EN	R/W	When set, it enables the pull-up to this pin.
0	PULL_DN_EN	R/W	When set, it enables the pull-down to this pin.
(0X00A0- RESET=0X00)			
7:2	Reserved	R	Always read as 0
1	IO_IN	R	This bit reflects the state of the **SCx_IO** pin when select muxes are set to Smart Card Mode as well as synchronous Mode.
0	IO_OUT	R/W	This bit reflects the state of the **SCx_IO** pin when select muxes are set to Smart synchronous Mode.

The SC_SYNC_ALL Register provides parallel control to read and write all of the Smart Card pads at the same time. The bits **CARD_RST_CNTL**, **CARD_CLK_CNTL**, **CARD_IO_CNTL**, **CARD_FCB_CNTL**, and **CARD_SPU_CNTL** provide read (and write) access to the respective Synchronous registers IN (and OUT) bits respectively.

The Synchronous Register controls for each pad, such as **INPUT_EN**, **OUTPUT_EN**, **FAST_OPEN_DRAIN**, **OPEN_DRAIN**, **PULL_UP**, and **PULL_DOWN** in the respective registers need to be programmed before write access to this register.

Note: The Smart Card 2 interface does not have C4, C8 pins defined.

Table 10.12 Smart Card Sync ALL Control Register

SC_SYNC_ALL (0X00A4- RESET=0X00)			SMART CARD ALL CONTROL REGISTER
BIT	**NAME**	**R/W**	**DESCRIPTION**
7:6	Reserved	R	Always read as 0
5	CARD_SPU_CNTL (CARD_C8_CNTL)	R/W	A read indicates the status of the **SC_SYNC_SPU.SPU_IN** bit. A write to this bit writes the **SC_SYNC_SPU.SPU_OUT** bit.
4	CARD_FCB_CNTL (CARD_C4_CNTL)	R/W	A read indicates the status of the **SC_SYNC_FCB.FCB_IN** bit. A write to this bit writes the **SC_SYNC_FCB.FCB_OUT** bit.

Table 10.12 Smart Card Sync ALL Control Register

SC_SYNC_ALL (0X00A4- RESET=0X00)			**SMART CARD ALL CONTROL REGISTER**
BIT	**NAME**	**R/W**	**DESCRIPTION**
3	CARD_IO_CNTL	R/W	A read indicates the status of the **SC_SYNC_IO.IO_IN** bit. A write to this bit writes the **SC_SYNC_IO.IO_OUT** bit.
2	CARD_CLK_CNTL	R/W	A read indicates the status of the **SC_SYNC_CLK.CLK_IN** bit. A write to this bit writes the **SC_SYNC_CLK.CLK_OUT** bit.
1	CARD_RST_CNTL	R/W	A read indicates the status of the **SC_SYNC_RST.RST_IN** bit. A write to this bit writes the **SC_SYNC_RST.RST_OUT** bit.
0	CARD_VCC_CNTL	R/W	This bit when reset disables power to the Smart Card 1 (or 2) pads. Resetting this bit causes masking of **PWR_SC1_EN** (or **PWR_SC2_EN**) bit in the POWER_CTL1 Register, controlling the voltage regulators to the Smart Card pads. This bit when set enables the **PWR_SC1_EN** (or **PWR_SC2_EN**) bit to control the voltage regulators to the Smart Card pads. The voltage applied is indicated by non-zero values of the **PWR_SC1_EN** (or **PWR_SC2_EN**) bit.

© 2013 Microchip Technology Inc.

10.12.1 Synchronous Interface Output

The timing diagram shows how the output behaves under different register setting for the synchronous interface when configured as an output.

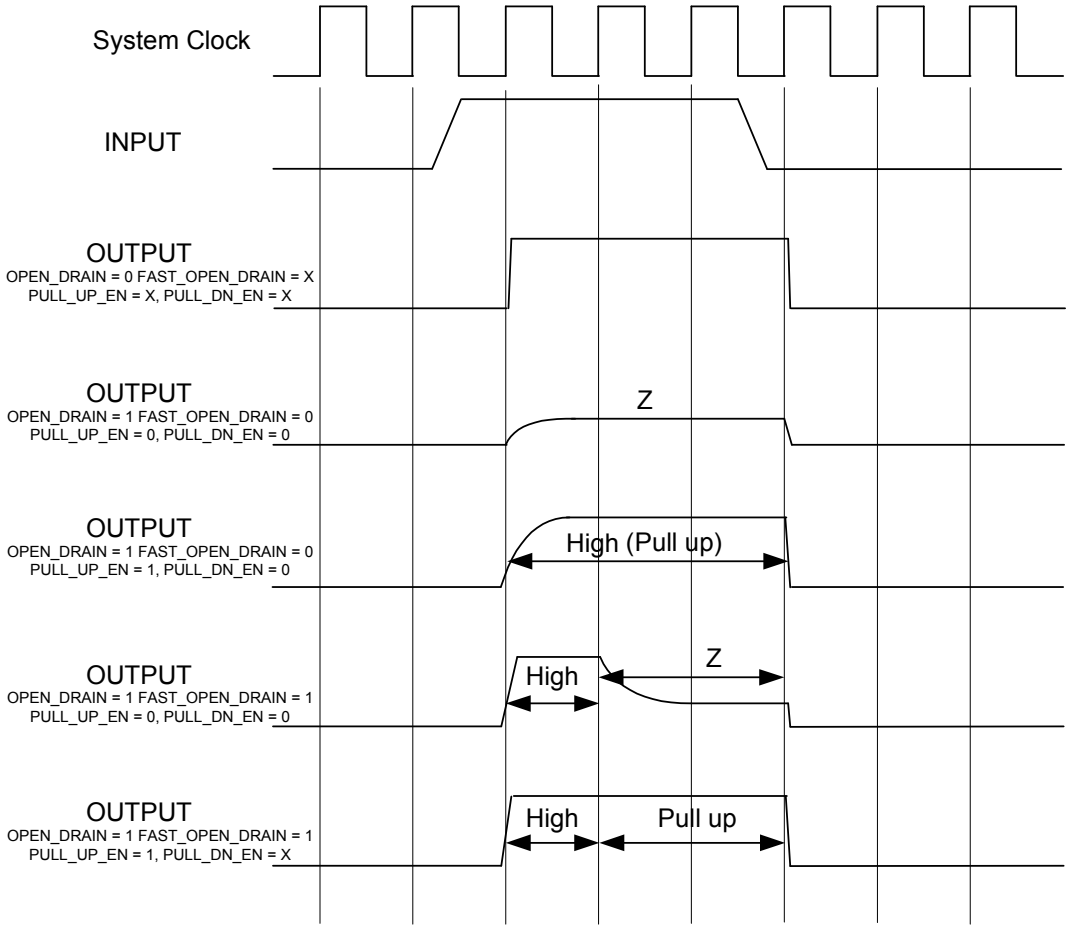

Figure 10.2 Smart Card Synchronous Output Configurations

10.13 Power

The Smart Card block is enabled when the **SC1_CLK_EN** (or **SC2_CLKEN**) is turned on in the SC1_CLK_DIV (or SC2_CLK_DIV) Register.

10.14 Asynchronous Interface Registers

The SEC1110 and SEC1210 have Smart Card Interfaces based on the ISO/IEC 7816 Standard.

10.14.1 Asynchronous Mode Registers

Table 10.13 Smart Card Transmit/Receive Buffer Register

SC_TBR_RBR (0X0000- RESET=0XXX)			SMART CARD TRANSMIT/RECEIVE BUFFER REGISTER
BIT	**NAME**	**R/W**	**DESCRIPTION**
7:0	DATA	R/W	Writing to this register causes the byte to be written to the FIFO, and an internal count is incremented for determining the length of the message to be transmitted. Writing too much information will cause the message to be silently truncated to the length of the FIFO. Reading from this register causes a byte to be read from the FIFO. This decrements the FIFO Count Register. If the FIFO Count Register is already zero, this causes the UE bit in the Line Status Register to be set to 1, and the Receiver is disabled from writing to the FIFO.

Table 10.14 Smart Card Interrupt Enable Register

SC_IEN (0X0001- RESET=0X00)			SMART CARD INTERRUPT ENABLE REGISTER
BIT	**NAME**	**R/W**	**DESCRIPTION**
7	PRTI	R/W	`1`: Enables the Protocol and Timer Interrupt. The sources of this interrupt are itemized in register PRIP.
6	AUTO_DA_PWR_OFF	R/W	For the SEC1110 and SEC1210 A0 version, this bit is not used. In the SEC1110 and SEC1210 A1 version onwards, the behavior is as follows: When this bit is set to `1`, it indicates that **SCx_VCC** power is turned off automatically during auto-deactivation. Auto-deactivation occurs when a Smart Card is removed (**SCx_PRSNT_N** goes high), or the **APDE** bit is set and a non-recoverable parity error is encountered. This bit must not be set to `1` in SEC1110 and SEC1210 A1 version, for Class A, Class B modes. When this bit is set to `0` (default), it indicates that the hardware will go through the auto-deactivation sequence of driving RST, CLK, and IO lines low, but not power down **SCx_VCC**. An interrupt is raised when auto-deactivation occurs and software must follow the power down sequence. The interrupt source is from the GPIO (Card remove) due to the **RLSI** (non-recoverable parity error).
5	GPI	R/W	Set to 0. Do not use for SEC1110 and SEC1210.
4	PTI	R/W	Set to 0. Do not use for SEC1110 and SEC1210.
3	Reserved	R/W	Always write 0
2	RLSI	R/W	`1` : Enables an interrupt on Line Status errors: Parity, Framing, Overflow or Underflow.
1	THRRI	R/W	`1` : Enables an interrupt when the Transmitter has finished transmission of a message, including the minimum Guard Time (stop bits).

© 2013 Microchip Technology Inc.

Table 10.14 Smart Card Interrupt Enable Register

SC_IEN (0X0001- RESET=0X00)			SMART CARD INTERRUPT ENABLE REGISTER
BIT	**NAME**	**R/W**	**DESCRIPTION**
0	RDAI	R/W	1 : Enables an interrupt when FIFO data is available to read, either by the threshold value or by any data at all in the FIFO after a timeout condition (e.g., the CWT Timer).

10.14.1.1 Interrupt Identification

By accessing this register, the host CPU can determine the highest priority interrupt and its source. Four levels of priority interrupt exist with a descending order of priority as follows:

1. Receiver line status (highest priority)
2. Received data ready
3. Transmitter holding register empty or threshold has been reached
4. Protocol/Timer Interrupt

Information indicating that a prioritized interrupt is pending and the source of that interrupt is stored in the SC Interrupt Identification Register (refer to interrupt control table). When the CPU accesses the IIR, the Smart Card Interface freezes all interrupts and indicates the highest priority pending interrupt to the CPU. During this CPU access, even if the Smart Card Interface records new interrupts, the current indication does not change until either the interrupt is re-enabled or the event causing the interrupt is cleared and re-asserted. The contents of the SC_IIR are described below.

Note: Interrupts are re-enabled by writing a 1 to the interrupt enable bit. This bit does not need to be cleared to re-enable interrupts.

Table 10.15 Smart Card Interrupt Identification Register

SC_INT_ID (0X0002- RESET=0B00XX00XX1)			SMART CARD INTERRUPT IDENTIFICATION REGISTER
BIT	**NAME**	**R/W**	**DESCRIPTION**
7	PRTI	R/W	1 : Indicates the presence of a Protocol or Timer Interrupt. The sources of this interrupt are itemized in register PRIP, and are cleared by reading that register.
6	AUTO_DA_PWR_OFF	R/W	This bit is not used in the SEC1110/SEC1210 version. In SEC1110/SEC1210 version onwards, the behavior is as follows: This bit is set to 1 if the **SC_IEN.AUTO_DA_PWR_OFF** bit is set, and an auto-deactivation event occurred. This bit is cleared when both the **SC_INTF_MON.CRMV** bit and **SC_LCR.APDE** bits are cleared by software.
5	GPI	R/W	Do not use, SC_IEN to keep disabled
4	PTI	R/W	Do not use, SC_IEN to keep disabled

Table 10.15 Smart Card Interrupt Identification Register

SC_INT_ID (0X0002- RESET=0B00XX00XX1)			SMART CARD INTERRUPT IDENTIFICATION REGISTER
BIT	**NAME**	**R/W**	**DESCRIPTION**
3	FTO	R/W	FIFO Timeout: `1` : Indicates a FIFO Data Timeout caused by the CWT Timer, or by the Timeout Timer in T=0 Mode, rather than the amount of received data reaching the Threshold value. It also indicates that the Receiver will be delivering no more data bytes to the FIFO. This bit is not an interrupt source, but is instead a status bit, which should be examined when processing the RDAI Interrupt. This bit is cleared by emptying or resetting the FIFO.
2:1	PRI	R/W	If the **IP** bit in this register is 0 (active), then this field holds the source of the interrupt
0	IP	R/W	`0` : Indicates that an interrupt is pending, and that the PRI field of this register indicates the highest priority level pending. `1` : Indicates that no interrupt is pending.

Note: The traditional UART FIFO Control Register functions are no longer in a write-only register at this address. Instead, the FCR Register is a read/write register at location offset 0x0012, and the Threshold is in a separate pair of registers.

Table 10.16 Interrupt Control Table

INTERRUPT ID REGISTER FIELDS											
PRTI	**OCSI**	**GPI**	**PTI**	**FTO**	**PRI**		**IP**				
BITS											
7	**6**	**5**	**4**	**3**	**2**	**1**	**0**	**PRIORITY LEVEL & ENABLE**	**INTR. TYPE**	**INTR. SOURCE**	**INTR. RESET CONTROL**
X	NA	NA	NA	X	X	X	1	-	None	None	-
X	1	NA	NA	X	1	1	0	First SC_IEN bit 6	AUTO_DA_PWR_OFF	Auto-deactivation due to Smart Card removal or non-recoverable parity error	Clearing the **SC_IEN.AUTO_DA_PWR_OFF** bit
X	NA	NA	NA	X	1	1	0	First & **SC_IEN** bit 2	Line Status	Overrun Error, Parity Error, Frame Error, Underflow Error, or TF (Guard Algorithm Timeout)	Reading the Line Status Register
X	NA	NA	NA	0	1	0	0	Second & **SC_IEN** bit 0	Received Data available	Receiver Data available	Reading from the FIFO until its level drops below the threshold level

© 2013 Microchip Technology Inc.

Table 10.16 Interrupt Control Table

INTERRUPT ID REGISTER FIELDS											
PRTI	OCSI	GPI	PTI	FTO	PRI		IP				
BITS											
7	6	5	4	3	2	1	0	PRIORITY LEVEL & ENABLE	INTR. TYPE	INTR. SOURCE	INTR. RESET CONTROL
X	NA	NA	NA	1	1	0	0	Second & **SC_IEN** bit 0	Character Timeout indication	CWT or Timeout Timer underflow with data in FIFO.	Reading from the FIFO
X	NA	NA	NA	X	0	1	0	Third & **SC_IEN** bit 1	Transmit Finished	Transmit Phase of Exchange is complete	Reading the IID Register
1	NA	NA	NA	X	0	0	0	Fourth & **SC_IEN** bit 7	Protocol Timer Timeout	GP Counter underflow (normal) or Timeout, CWT or Guard Timer underflow (errors)	Reading the PRIP Register

Table 10.17 Smart Card Line Control Register

SC_LCR (0X0003- RESET=0X00)			SMART CARD LINE CONTROL REGISTER
BIT	**NAME**	**R/W**	**DESCRIPTION**
7:6	DLAB	R/W	These bits are forced to zero.
5	DCEN	R/W	General Purpose Down Counter Enable: 1 : Starts the counter. See Section 10.5.3, "Recommended etu Rates and Settings," on page 71 for details.
4	CARD_FAKE	R/W	In SEC1110/SEC1210, always read as 0. In SEC1110/SEC1210 this bit is used to fake the SCx_PRSNT_N input as active. 0 : No card fake. (default). The card presence is based on SCx_PRSNT_N pin through the GPIO block. 1 : Fake card presence. This bit if set, causes the Smart card hardware to ignore SCx_PRSNT_N pin, and assume card is present. The fake card presence is still validated through debounce delays. This feature enables usage of SCx_PRSNT_N pin for other purposes.

Table 10.17 Smart Card Line Control Register

SC_LCR (0X0003- RESET=0X00)			SMART CARD LINE CONTROL REGISTER
BIT	**NAME**	**R/W**	**DESCRIPTION**
3	PER_SIG_MODE	R/W	In SEC1110/SEC1210, always read as 0. In SEC1110/SEC1210 this bit indicates the assertion time of parity error. 0 : Parity error is signaled for one ETU, as measured by internal block sc_clk. The actual width of parity error depends on rise/fall delays of SCx_IO line. (default) 1 : Parity error is signaled for 1.25 ETU, as measured by internal block sc_clk. This setting ensures, that the parity error assertion width is independent of rise/fall time on SCx_IO line.
2	TMO_CONFIG	R/W	This bit defines the unit resolution of Timeout Timer. 0 : Timeout Timer Unit Resolution is in 1.25 milliseconds. 1 : Timeout Timer Unit Resolution is one ETU.
1	APDE	R/W	Automatic Parity-Error Deactivate Enable: 1 : Causes the ICC to be deactivated by hardware upon a non-recoverable parity error. The device must also be in T=0 Mode for this to occur. If the **CRE** bit is also 0, this will occur without performing character repetition or signalling to the ICC.
0	CRE	R/W	Character Repeat Enable: 1 : Enables character repeat in T=0 Mode if a Parity Error is signalled by the ICC.

Table 10.18 Smart Card Interface Monitor Register

SC_INTF_MON (0X0004- RESET=0B00X10XX0)			SMART CARD INTERFACE MONITOR REGISTER
BIT	**NAME**	**R/W**	**DESCRIPTION**
7	FFULL	R/W	FIFO Full: indicates that the FIFO is completely full with data to be transmitted.
6	Reserved	R	Always read as 0
5	PSNT	R/W	This pin reflects the state of the **SCx_PRSNT_N** pin.
4	CRMV	R/W	Card Removed: This bit is set to 1 when a card is being removed. It is a read-only 1, and cannot be cleared by software, as long as the debounced version of the **SCx_PRSNT_N** signal is high. When **SCx_PRSNT_N** goes low, this bit can be cleared by writing a 1 to it. While this bit is 1, the SC_ICR Register is held to its default state, which holds the signals **SCx_IO**, **SCx_CLK** and **SCx_RST_N** low.
3	FTH	R/W	1 : Indicates the presence of a FIFO Threshold Interrupt request.
2	RST_N	R/W	Indicates the current state of the **SCx_RST_N** pin.

© 2013 Microchip Technology Inc.

Table 10.18 Smart Card Interface Monitor Register (continued)

SC_INTF_MON (0X0004- RESET=0B00X10XX0)			SMART CARD INTERFACE MONITOR REGISTER
BIT	**NAME**	**R/W**	**DESCRIPTION**
1	IO	R/W	Indicates the current state of the **SCx_IO** pin.
0	CRPT	R/W	Indicates, in T=0 Mode, whether any characters needed to be repeated to the ICC. This bit may be cleared by writing a 1 to it. This is an indicator only.

Table 10.19 Smart Card Line Status Register

SC_LSR (0X0005- RESET=0XXX)			SMART CARD LINE STATUS REGISTER
BIT	**NAME**	**R/W**	**DESCRIPTION**
7	ETR	R/W	Indicates whether a Parity Error (bit 2) occurred in the Transmit phase (0) or the Receive phase (1) of an exchange.
6	TRANSMIT_EMPTY	R/W	This bit is cleared to 0 at the beginning of transmission, and is set to 1 when the transmission completes, including Guard Time (stop bit(s)) of the last character.
5	TRANSMIT_FAILURE	R/W	Indicates that a Guard Time algorithm failure occurred.
4	UNDERFLOW_ERROR	R/W	1 : Indicates that a software error has caused an attempt to read from the FIFO while it is empty. Since this can add indeterminate bytes to a message, the Receiver is disabled to the FIFO, by clearing the **FRE** bit.
3	FRAMING_ERROR	R/W	1 : Indicates that a Framing Error has been seen on received data. It disables the Receiver from the FIFO, by clearing the **FRE** bit in the FCR Register upon its occurrence, after placing the character with the error into the FIFO. Reading this register clears this bit.
2	PARITY_ERROR	R/W	1 : Indicates a Parity Error. It disables the Receiver or the Transmitter from the FIFO upon its occurrence, by clearing the **FRE** or **FTE** bit in the FCR Register. If the error is seen while receiving, the **FRE** bit will be cleared after receiving the character with the error into the FIFO. Reading this register clears this bit. If the **APDE** bit in the LCR Register is 1, the error will also deactivate the ICC immediately by hardware action.
1	OVERRUN_ERROR	R/W	1 : Indicates that too much data has been received from the ICC, so that the FIFO became completely full and lost a character. This error disables the Receiver or the Transmitter from the FIFO upon its occurrence, by clearing the **FRE** bit. **Note:** Attempting to transmit a message longer than the FIFO length will silently truncate the message, but will not set this bit.
0	DATA_READY	R/W	1 : Indicates that the FIFO is not empty of received data. This bit is not affected by reading this register.

Note: All bits except **SC_LSR.DATA_READY** (bit 0) are automatically cleared after reading this register.

Table 10.20 Smart Card Block Master Control Register

SC_BMC (0X0006- RESET=0X00)			SMART CARD BLOCK MASTER CONTROL REGISTER
BIT	**NAME**	**R/W**	**DESCRIPTION**
7:2	Reserved	R	Always read as 0
1	GIE	R/W	Global Interrupt Enable: A 0 in this bit position disables all interrupts from the Smart Card interface.
0	MRST	R/W	Software-Controlled Master Reset Control: Set this bit to 1 to reset the Smart Card block. The configuration section is not affected, and the GPIO section is not affected except that interrupts are disabled in the IEN Register. When the bit returns to 0, hardware is indicating that the reset is complete.

Table 10.21 Smart Card Interface Control Register

SC_ICR (0X0007- RESET=0B00001000)			SMART CARD INTERFACE CONTROL REGISTER
BIT	**NAME**	**R/W**	**DESCRIPTION**
7	RST_N	R/W	**SCx_RST_N** Pin Control: The default value (0) holds the **SC_RST_N** pin low. A 1 in this bit causes the **SCx_RST_N** pin to drive high. This bit may be written to 1 or 0 by software, and the first underflow of the Guard Timer, while the Protocol Mode Register is indicating ATR Mode, sets this bit to 1, and causes the **SC_RST_N** pin to rise as part of the Reset/ATR sequence.
6	ENG	R/W	Enable Guard Timer: Writing 1 enables the Guard Timer to begin counting at the next triggering event. Writing 0 has no effect: to clear this bit, write 1 to the **RSG** bit in the Timer Control Register. This bit is cleared by hardware in ATR Mode when the first start bit is seen, or on an underflow from the BGT reload. In the second case, an interrupt request is also presented
5:4	VPIN	R/W	Not used.
3	CSTP	R/W	Clock Stop: `1` : Stops the **SCx_CLK** signal either high or low, depending on the **CSTL** bit. `0` : Causes the **SCx_CLK** signal to run. This signal is initially 1 on reset, causing **SCx_CLK** to be stopped in the low state. When setting this bit, the CPU clock must be multiple of **SCx_CLK** and CPU frequency must not be changed. Otherwise a clock glitch can occur on **SCx_CLK.** To avoid this, software synchronization must be done to read **SCx_CLK** and CSTP bit must be set with CSTL=0 when **SCx_CLK** is low.

© 2013 Microchip Technology Inc.

Table 10.21 Smart Card Interface Control Register (continued)

SC_ICR (0X0007- RESET=0B00001000)			SMART CARD INTERFACE CONTROL REGISTER
BIT	**NAME**	**R/W**	**DESCRIPTION**
2	CSTL	R/W	Clock Stop Level: When the **CLKSTP** bit is set, this bit indicates the state in which the **SCx_CLK** pin should stop: 1 means stop the clock high, 0 means stop the clock low. This bit is initially 0 on reset, causing **SCx_CLK** to be stopped in the low state.
1	IO	R/W	**SCx_IO** Pin Control: The default value (0) forces the **SCx_IO** pin low. Writing a 1 to this bit enables the **SCx_IO** pin to float and to drive high.
0	IOPU	R/W	1 : Enables a weak pull-up device on the **SCx_IO** pin. This device is internally disabled while the Transmitter is actively driving the **SCx_IO** pin.

Table 10.22 Smart Card Data Register

SC_DATA (0X0008~0X000B- RESET=0XXX)			SMART CARD DATA REGISTER
BIT	**NAME**	**R/W**	**DESCRIPTION**
7:0	DATA	R/W	Perform all transfers at the location DATA, regardless of size. Transferring a value at the DATA location has the same effect as transferring the individual bytes (LS byte first) at the SC_TBR_RBR location (0000), but is more efficient for the larger data types. In the SEC1110 and SEC1210, these registers are present for software compatibility to other parts.

Table 10.23 Smart Card Protocol Status Register

SC_PRS (0X000C- RESET=0X04)			SMART CARD PROTOCOL STATUS REGISTER
BIT	**NAME**	**R/W**	**DESCRIPTION**
7	Reserved	R	Always read as 0
6	INVALID_START_STS	R	This bit is set when an invalid start bit received. Invalid start bit is detected when any of the below checks fail. ▪ Start bit period less than 0.5 etu ▪ A level LOW check on SCx_IO pin at the sample time specified in the START_WIDTH_TOL register This bit is reset when read or when RSE bit in SC_FCR register is set. In SEC1110/SEC1210, always read as 0.

Table 10.23 Smart Card Protocol Status Register (continued)

SC_PRS (0X000C- RESET=0X04)			SMART CARD PROTOCOL STATUS REGISTER
BIT	**NAME**	**R/W**	**DESCRIPTION**
5	SMB	R/W	State Machine Busy: `1` : Indicates that a transfer is in progress `0` : Indicates that no transfer is in progress (idle/finished)
4	PWR	R/W	This bit is forced to 0
3	ACTV	R/W	Activity Bit: 1 : Indicates that a character has been received since the last time this bit was cleared by software. This bit is cleared by software, by writing a 0 to this bit location (this is the only writable bit in this register). Only the **RSE** bit in the SC_FCR Register has to be 1 in order for this bit to detect activity, and the **FRE** bit does not have to be 1.
2	GPH	R/W	Guard Timer Phase: Indicates the current phase of operation for the Guard Timer: `0` : next reload will be from the SC_EGT Register `1` : next reload will be from the BGT Register
1	TSM	R/W	TS Mode: Indicates the current convention: 0 = direct, 1 = inverse. Writing a 1 to the ATR bit in the Protocol Mode Register initializes this bit to 0, and it can be manipulated using some test register features. Otherwise, it is a read-only bit.
0	TSC	R/W	TS Captured: 1 : Indicates that a convention has been automatically captured from an ATR TS byte. Writing a 1 to the ATR bit in the Protocol Mode Register initializes this bit to 0, and it can be manipulated using some test register features. Otherwise, it is a read-only bit.

Table 10.24 Smart Card Protocol Interrupt Pending Register

SC_PRIP (0X000D- RESET=0X00)			SMART CARD PROTOCOL INTERRUPT PENDING REGISTER
BIT	**NAME**	**R/W**	**DESCRIPTION**
7	GPT	R/W	1 : General Purpose Down Counter Interrupt
6	TSW	R/W	1 : Timeout waiting for the TS byte in ATR Mode. (Guard Timer, EGT reload phase.)
5	TMO	R/W	1 : Timeout on the Timeout Timer (WWT, BWT or WTX)
4	CWT	R/W	1 : Timeout on the CWT Timer (CWT, or timeout waiting for the ATR TS byte)
3	NULL	R	This bit if set indicates to the processor that a NULL byte was received. This bit may be used in T=0 Mode, to detect NULL byte reception, and indicate to host software.

© 2013 Microchip Technology Inc.

Table 10.24 Smart Card Protocol Interrupt Pending Register (continued)

SC_PRIP (0X000D- RESET=0X00)			SMART CARD PROTOCOL INTERRUPT PENDING REGISTER
BIT	**NAME**	**R/W**	**DESCRIPTION**
2	EOM	R/W	1 : End of Message indication from one of the T=0 Filter State Machines. If communication terminates prematurely or with an error, the **CV** bit will also be 1.
1	COLL	R/W	This bit gets set on a collision detection, when the chip is transmitting on the **SCx_IO** line, and the feedback value on the **SCx_IO** line sampled at the middle of ETU, is different from the value transmitted. This error raises an interrupt if **SC_PRIE.COLL** bit This error indication causes resets to all Smart Card block state machines and clears **FRE** and **FTE**. If this bit is disabled, hardware ignores the collision and proceeds normally. However, the collision status will be available to SW. There is a possibility that further collisions will cause parity or timeout errors. This bit is also set if **SCx_RST_N** collision occurs (i.e., Terminal is asserting **SCx_RST_N** low, and this line is high, or vice-versa).
0	CV	R/W	This is a status bit, not an interrupt source. 1 indicates that a code violation has occurred; either a bad TS value during ATR.In T=0 Mode with a Filter State Machine enabled, a code violation can be either an unrecognized Procedure Byte or an SW1 byte earlier than expected.

Note: Some erroneous Smart Cards assert **SCx_IO** at 11 etu instead of 10.5 etu.

Table 10.25 Smart Card Protocol Interrupt Enable Register

SC_PRIE (0X000E- RESET=0X00)			SMART CARD PROTOCOL INTERRUPT ENABLE REGISTER
BIT	**NAME**	**R/W**	**DESCRIPTION**
7	GPT	R/W	1 : Enables General Purpose Down Counter Timeout
6	TSW	R/W	1 : Enables TSW Timeout waiting for the TS byte in ATR Mode. (Guard Timer, EGT reload phase)
5	TMO	R/W	1 : Enables TMO Timeout on the Timeout Timer
4	CWT	R/W	1 : Enables CWT Timeout on the CWT Timer
3	NULL	R	This bit if set enables an interrupt to the processor when a NULL byte is received. This bit may be enabled in T=0 Mode, to detect NULL byte reception, and indicate to host software.
2	EOM	R/W	1 : Enables EOM End of Message
1	COLL	R/W	1 : Enables COLL error detection If this bit is enabled, and a collision occurs, then only **COLL** status bit is updated, and the current transaction is aborted by the hardware.
0	CV	R/W	1 : Enables CV Interrupt

Note: This register enables the interrupts coming from the PRIP Register

Table 10.26 Smart Card Timer Status Register

SC_TMS (0X000F- RESET=0X10)			SMART CARD TIMER STATUS REGISTER
BIT	**NAME**	**R/W**	**DESCRIPTION**
7:5	Reserved	R	Always read as 0
4	GS_MAX_TIMEOUT	R	This bit if set indicates that the maximum guard spacing timeout has happened.
3	TORUN	R	1 : Indicates that the Timeout Timer has been triggered and is running
2	Reserved	R	Always read as 0
1	CRUN	R	1 : Indicates that the CWT Timer has been triggered and is running
0	GRUN	R	1 : Indicates that the Guard Timer has been triggered and is running

Table 10.27 Smart Card Baud Divisor LSB Register

SC_DLL (0X0010- RESET=0X01)			SMART CARD BAUD DIVISOR LSB REGISTER
BIT	**NAME**	**R/W**	**DESCRIPTION**
7:0	BAUD_DIV_7_0	R/W	These are the lower 8 bits of the 16 bit baud rate divisor. The most significant 8 bits are held in the SC_DLM Register. The baud rate divisor, with the Sampling field of the CLK Register, divides the etu rate from the sc1_clk/sc2_clk input clock from the CLK_PWR block.

Table 10.28 Smart Card Baud Divisor MSB Register

SC_DLM (0X0011- RESET=0X00)			SMART CARD BAUD DIVISOR MSB REGISTER
BIT	**NAME**	**R/W**	**DESCRIPTION**
7:0	BAUD_DIV_15_8	R/W	These are the most significant 8 bits of the 16 bit baud rate divisor. The least significant 8 bits are held in the SC_DLL Register. The baud rate divisor, with the Sampling field of the CLK Register, divides the etu rate from the sc1_clk/sc2_clk input clock from the CLK_PWR block.

© 2013 Microchip Technology Inc.

Table 10.29 Smart Card FIFO Control Register

SC_FCR (0X0012- RESET=0X00)			SMART CARD FIFO CONTROL REGISTER
BIT	**NAME**	**R/W**	**DESCRIPTION**
7:6	Reserved	R	Always read as 0
5	RFS	R	Receiver FIFO Status: This bit indicates whether the Receiver is actively prepared to place characters into the FIFO. It may not match the **FRE** bit, if the Receiver is still waiting for a trigger to begin (e.g., waiting for transmission to complete).
4	RSS	R	Receiver Sampling Status: This bit indicates whether the Receiver is actively sampling for characters. It may not match the RSE bit, if the Receiver is still waiting for a trigger to begin. For example, in ATR Mode, it may not yet be active, pending a rising edge on the **SCx_RST_N** pin.
3	RSE	R/W	Receiver Sampling Enable: 1 written to this bit enables the Receiver to sample the **SCx_IO** pin for characters. In ATR Mode, the sampling does not occur immediately, but waits for a rising edge on the **SCx_RST_N** pin first. This bit is cleared by an incoming error (e.g., repeated parity error in T=0 Mode, or CWT violation in T=1 Mode, or Overrun Error). While the Receiver is sampling, the BGT or DGT value in the Guard Timer Register continues to be used to inhibit the Transmitter, regardless of the state of the **FRE** bit.
2	FRST	W	FIFO Reset: Always reads as 0. A 1 written to this bit resets the FIFO to an Empty state. If an error has occurred while transmitting to the card, this function must be used to re-initialize the FIFO.
1	FRE	R/W	FIFO Receive Enable: Allows reception into the FIFO. Except in ATR Mode, a transmission has to occur before the Receiver is actually activated. In ATR Mode, a rising edge must occur on the **SCx_RST_N** pin before the Receiver is activated. This bit is turned off by errors occurring during reception or transmission (e.g., CWT timeout error); otherwise software must turn it off after receipt of a message, to prepare for the next exchange
0	FTE	R/W	FIFO Transmit Enable: Writing 1 to this bit triggers transmission from the FIFO. This bit is turned off by the normal end of transmission, when all bytes in the FIFO have been transmitted. It is also turned off by errors occurring during transmission (e.g., parity error after retransmissions in T=0 Mode).

Note: This register provides control for FIFO access, and enables the Receiver and the Transmitter.

Note: In SEC1110/SEC1210 version, if the FIFO is disabled before a GSR timeout occurs, then the GSR timer is not reset. The software work-around is to wait for the GSR timer to expire. This *Anomaly 6* is fixed in later versions (SEC1110/SEC1210).

Table 10.30 Smart Card Timeout Timer Least Significant Byte (LSB) Reload Register

SC_TOL (0X0014- RESET=0X00)			SMART CARD TIMEOUT TIMER LSB RELOAD REGISTER
BIT	**NAME**	**R/W**	**DESCRIPTION**
7:0	TIMER_RELOAD_LO	R/W	This register holds the LSB of the reload value for the Timeout Timer.

Table 10.31 Smart Card Timeout Timer Middle Significant Byte (MSB) Reload Register

SC_TOM (0X0015- RESET=0X00)			SMART CARD TIMEOUT TIMER MIDDLE MSB RELOAD REGISTER
BIT	**NAME**	**R/W**	**DESCRIPTION**
7:0	TIMER_RELOAD_MI	R/W	This register holds the middle MSB of the reload value for the Timeout Timer.

Table 10.32 Smart Card Timeout Timer High Significant Byte (HSB) Reload Register

SC_TOH (0X0013- RESET=0X00)			SMART CARD TIMEOUT TIMER HSB RELOAD REGISTER
BIT	**NAME**	**R/W**	**DESCRIPTION**
7:0	TIMER_RELOAD_HI	R/W	This register holds the HSB of the reload value for the Timeout Timer.

The Timeout Reload Register is a 24-bit register (SC_TOH, SC_TOM, SC_TOL) with unit resolution of 1.25 ms.

Table 10.33 Smart Card Down Counter LSB Register

SC_DCL (0X0016- RESET=0XFF)			SMART CARD DOWN COUNTER LSB REGISTER
BIT	**NAME**	**R/W**	**DESCRIPTION**
7:0	DOWN_CNT_LO	R/W	This register holds the LSB of the General Purpose Down Counter.

Table 10.34 Smart Card Down Counter MSB Reload Register

SC_DCM (0X0017- RESET=0XFF)			SMART CARD DOWN COUNTER MSB REGISTER
BIT	**NAME**	**R/W**	**DESCRIPTION**
7:0	DOWN_CNT_HI	R/W	This register holds the MSB of the General Purpose Down Counter.

© 2013 Microchip Technology Inc.

Table 10.35 Smart Card CWT Timer LSB Reload Register

SC_CWTL (0X0018- RESET=0X00)			SMART CARD CWT TIMER LSB RELOAD REGISTER
BIT	**NAME**	**R/W**	**DESCRIPTION**
7:0	TIMER_RELOAD_LO	R/W	This register holds the LSB of the reload value for the CWT Timer.

Table 10.36 Smart Card CWT Timer MSB Reload Register

SC_CWTM (0X0019- RESET=0X00)			SMART CARD CWT TIMER MSB RELOAD REGISTER
BIT	**NAME**	**R/W**	**DESCRIPTION**
7:0	TIMER_RELOAD_HI	R/W	This register holds the MSB of the reload value for the CWT Timer.

Table 10.37 Smart Card Guard Algorithm Spacing Register

SC_GSR_MSB (0X001B- RESET=0X00)			SMART CARD GUARD ALGORITHM SPACING REGISTER
BIT	**NAME**	**R/W**	**DESCRIPTION**
7:0	GUARD_ETUS_MSB	R/W	This register holds the MSB of maximum spacing between characters, specified as the number of etus from the leading edges of consecutive start bits.

Table 10.38 Smart Card Guard Algorithm Spacing Register

SC_GSR_LSB (0X001B- RESET=0X00)			SMART CARD GUARD ALGORITHM SPACING REGISTER
BIT	**NAME**	**R/W**	**DESCRIPTION**
7:0	GUARD_ETUS_LSB	R/W	This register holds the LSB of maximum spacing between characters, specified as the number of etus from the leading edges of consecutive start bits.

Table 10.39 Smart Card Guard Timer Reload A Register

SC_EGT (0X001C- RESET=0X00)			SMART CARD GUARD TIME RELOAD A REGISTER
BIT	**NAME**	**R/W**	**DESCRIPTION**
7:0	RELOAD_A	R/W	This register holds the Extra Guard Time value in T=0 or T=1 Mode. In ATR Mode, this register holds the maximum number of etus allowed from the rising edge of **SCx_RST_N** to the start bit of the TS byte. If the timer elapses, the TSW Interrupt is asserted, and the Receiver is disabled to the FIFO. Values are expressed in units of etu. The SC_PRM Register must be written after writing to this register, in order to latch the change.

Table 10.40 Smart Card Guard Timer Reload B Register

SC_BGT (0X001D- RESET=0X00)			SMART CARD GUARD TIME RELOAD B REGISTER
BIT	**NAME**	**R/W**	**DESCRIPTION**
7:0	RELOAD_B	R/W	This register holds the BGT value in T=1 Mode, or the DGT value in T=0 Mode, preventing transmission until the specified number of etus has elapsed since the last received character. Monitoring of characters for this purpose does not depend on whether the Receiver is enabled to the FIFO. This timer must be enabled, or it will not delay transmission. In ATR Mode, this register holds the desired width of the **SCx_RST_N** pulse (Warm Reset) or the duration of the clock before the removal of **SCx_RST_N**. Values are expressed in units of etu. The SC_PRM Register must be written after writing to this register, in order to latch the change.

10.14.1.2 Protocol Mode Register

The Guard Time reload registers EGT and BGT must be initialized to their desired values before writing to this register. Changing them afterward may fail to register the change.

All non-reserved bits are read/write. The **ATR** bit may be set to 1 only if the **TE1** bit is also set to 0. Valid settings for these two bits are:

- ATR Mode: **ATR**=1 and **TE1**=0. In this Mode, the Protocol Timers and the Receiver are conditioned to expect an ATR message from the ICC. Character framing is as per the T=0 protocol. This is the one case where the Receiver does not wait for the SEC1110 and SEC1210 to transmit first; instead, it waits for a rising edge on the **SCx_RST_N** pin, which is being controlled by the Guard Timer.
- T=0 Mode: **ATR**=0 and **TE1**=0. In this Mode, character framing and parity handling are as per the T=0 protocol. The Receiver waits until a message has been transmitted before it becomes active.
- T=1 Mode: **ATR**=0 and **TE1**=1. In this Mode, character framing and parity handling are as per the T=1 protocol. The Receiver waits until a message has been transmitted before it becomes active.

© 2013 Microchip Technology Inc.

The **OSME** and **ISME** bits are mutually exclusive: only one of them may be set to 1, and neither may be set to 1 without the **TE1** bit also being set to 0 and the **ATR** bit set to 0

Table 10.41 Smart Card Protocol Mode Register

SC_PRM (0X001E- RESET=0X00)			**SMART CARD REGISTER**
BIT	**NAME**	**R/W**	**DESCRIPTION**
7:5	Reserved	R	Always read as 0
4	ISME	R/W	1 : Indicates that the Incoming Filter State Machine is enabled. The **TE1** bit and **ATR** bit must also be set to 0.
3	OSME	R/W	1 : Indicates that the Outgoing Filter State Machine is enabled. The **TE1** bit and **ATR** bit must also be set to 0.
2	Reserved	R	Always read as 0
1	TE1	R/W	0 : Indicates that T=0 character framing is being used, either in T=0 protocol communication or receiving the ATR message. 1 : Indicates that the T=1 protocol is being used. This bit may not be set to 1 with any of bits **ATR**, **OSME** or **ISME** also set to 1.
0	ATR	R/W	Answer to Reset Mode: 1 : Indicates that a Reset sequence is to be presented, expecting a response from the card. The **TE1** bit must also be 0 in this Mode. Writing a 1 to this bit also clears the **TSC** and **TSM** bits in the Protocol Status Register, which causes the first byte received to be interpreted by hardware as the TS byte, setting the bit encoding convention based on what is received. **ATR** bit in SC_PRM Register should not be set once the ATR from the card is received.

Table 10.42 Smart Card Timer Control Register

SC_TCTL (0X001F- RESET=0X00)			**SMART CARD TIMER CONTROL REGISTER**
BIT	**NAME**	**R/W**	**DESCRIPTION**
7	RSG	R/W	Reset Guard Timer: This bit always reads as 0. Writing a 1 to this bit clears the **ENG** bit in the Interface Control Register to 0, and removes any pending interrupt request from the Guard Timer. (The **ENG** bit, which enables the Guard Timer, is in the Interface Control Register so that the Guard Timer may be started atomically with the presentation of **SC_RST_N** and **SC_CLK** to the Smart Card.)
6:5	Reserved	R	Always read as 0
4	RSC	R/W	Resets the CWT Timer: This bit always reads as 0. Writing a 1 to this bit clears the **ENC** bit to 0, and removes any pending interrupt request from the CWT Timer.

Table 10.42 Smart Card Timer Control Register

SC_TCTL (0X001F- RESET=0X00)			SMART CARD TIMER CONTROL REGISTER
BIT	**NAME**	**R/W**	**DESCRIPTION**
3	ENC	R/W	Writing 1 enables the CWT Timer to begin counting at the next triggering event. Writing 0 has no effect: to clear this bit, write 1 to the **RSC** bit in the Timer Control Register. This bit is cleared by hardware action in order to stop the timer.
2	WTX	R/W	`1` : Places the Timeout Timer in WTX Mode `0` : Places it in BWT Mode. In WTX Mode, the Timeout Timer underflow reloads the Timeout Timer instead of stopping it, and the Receiver is not disabled on underflow.
1	RSTO	R/W	Reset the Timeout Timer: This bit reads as 0 always. Writing a 1 to this bit clears the **ENTO** bit to 0, and removes any pending interrupt request from the Timeout Timer.
0	ENTO	R/W	Writing 1 enables the Timeout Timer to begin counting at the next triggering event. Writing 0 has no effect: to clear this bit, write 1 to the **RSTO** bit in the Timer Control Register. This bit is cleared by hardware action in order to stop the timer.

Table 10.43 Smart Card Clock Divisor Register

SC_CLK_DIV (0X0025- RESET=0X58)			SMART CARD CLOCK DIVISOR REGISTER
BIT	**NAME**	**R/W**	**DESCRIPTION**
7:6	SAMPLING		This field indicates a divisor to apply from the DLL/DLM value in order to get the final etu rate: `00` : divide by 31 `10` : divide by 16 `01` : divide by 1 `11` : reserved for future use The SC_CLK_DIV divisor field is reduced in size to 6 bits
5:0	DIVISOR	R/W	This field gives the divisor to apply to the SEC1110 and SEC1210 system clock in order to generate the **SCx_CLK** signal to the ICC.

Table 10.44 Smart Card Configuration Block Register

SC_CFG (0X0026- RESET=0X60)			SMART CARD CONFIGURATION BLOCK REGISTER
BIT	**NAME**	**R/W**	**DESCRIPTION**
7:0	Reserved	R	Always read as 0

© 2013 Microchip Technology Inc.

Note: In SEC1110 and SEC1210, the SC_CFG is hardwired to zero.

Table 10.45 Smart Card LED Control Register

SC_LEDC (0X0027- RESET=0X00)			SMART CARD LED CONTROL REGISTER
BIT	**NAME**	**R/W**	**DESCRIPTION**
7:4	BLINK[3:0]	R/W	This field is reserved for the SEC1110/SEC1210 version. In SEC1110/SEC1210, this field indicates the LED blinking time in units of 25 ms. For instance, a value of 4 would indicate 5 blinks per second.
3	LED_PRGM_TIME_EN	R/W	This field is reserved for the SEC1110/SEC1210 version. In SEC1110/SEC1210, this bit controls the blinking of LED. 0 : (default). LED ON/OFF time is fixed as defined by **LMD**, **LCTL** fields. 1 : LED ON/OFF time is based on the value programmed in BLINK field. If LMD is set, then the LED blinking (BLINK field controls the rate) is based on **SCx_IO** pin activity.
2	LMD	R/W	LED Mode: `0` : LED is controlled by the LED control field in this register. `1` : LED is controlled by activity on the **SCx_IO** pin. When there is activity on the **SCx_IO** pin the LED will blink at an approximate 6.25 Hz rate with a 50% duty cycle (80 msec on, 80 msec off).
1:0	LCTL	R/W	LED Control, when LED_PRGM_TIME_EN bit is 0. `00` = Off `01` = Blink at 1Hz rate with a 50% duty cycle (0.5 sec on, 0.5 sec off) `10` = Blink at ½ HZ rate with a 25% duty cycle (0.5 sec on, 1.5 sec off) `11` = On When LED_PRGM_TIME_EN bit is set to 1, `00` = Off `01` = BLINK * 25 ms ON and BLINK * 25 ms OFF `10` = BLINK * 25 ms ON and BLINK * 3 * 25 ms OFF (25% duty cycle) `11` = ON

10.14.1.3 FIFO Threshold Registers

These registers hold the FIFO threshold for received bytes. The FIFO Threshold Interrupt is asserted when the number of received/written bytes in the FIFO exceeds the number provided here. For example, set these registers to 0000h to be interrupted on every byte received. The interrupt is also asserted on a timeout of the CWT Timer, or of the Timeout Timer in T=0 Mode, regardless of the contents of these registers.

These registers have no effect on transmission: the number of bytes present in the FIFO at the time that the **FTE** bit is set to 1 determines the length of the message transmitted.

Table 10.46 Smart Card FIFO Threshold LSB Register

SC_FTHL (0X0028- RESET=0X00)			**SMART CARD FIFO THRESHOLD LSB REGISTER**
BIT	**NAME**	**R/W**	**DESCRIPTION**
7:0	FIFO_THRESHOLD_LO	R/W	This register hold the LSB FIFO threshold for received bytes.

Table 10.47 Smart Card FIFO Threshold MSB Register

SC_FTHM (0X0029- RESET=0X00)			**SMART CARD FIFO THRESHOLD MSB REGISTER**
BIT	**NAME**	**R/W**	**DESCRIPTION**
7:0	FIFO_THRESHOLD_HI	R/W	This register hold the MSB FIFO threshold for received bytes.

10.14.1.4 FIFO Count Registers

This register pair holds the number of bytes currently in the FIFO.

While setting up for transmission, and during transmission, this register tracks bytes being transmitted. If there is an error in transmission, the Transmitter stops and this register holds the number of bytes remaining in the FIFO. In case of a transmission error, the FIFO must be reset using the **FRST** bit in the FCR Register. This action will also clear these registers to zero. During transmission (i.e., while the Receiver is not active), the value in these registers is not compared against the Threshold value in the FTHL/FTHM register pair.

While the Receiver is active, this register pair also tracks the number of bytes in the FIFO, and this value is compared against the FIFO Threshold in the FTHL/FTHM register pair in order to provide the FIFO Threshold Interrupt.

To determine whether an error happened during the Transmit or Receive phase of an exchange (and hence which count is being displayed in this register), software may inspect the **ETR** bit in the Line Status Register.

Table 10.48 Smart Card FIFO Count LSB Register

SC_FCL (0X002A- RESET=0X00)			**SMART CARD FIFO COUNT LSB REGISTER**
BIT	**NAME**	**R/W**	**DESCRIPTION**
7:0	FIFO_COUNT_LO	R/W	This register holds the LSB of the FIFO count in bytes.

Table 10.49 Smart Card FIFO Count MSB Register

SC_FCM (0X002B- RESET=0X00)			**SMART CARD FIFO COUNT MSB REGISTER**
BIT	**NAME**	**R/W**	**DESCRIPTION**
7:0	FIFO_COUNT_HI	R/W	This register holds the MSB of the FIFO count in bytes.

© 2013 Microchip Technology Inc.

Table 10.50 Smart Card Filter Length Register

SC_FLL (0X002C- RESET=0X00)			SMART CARD FILTER LENGTH REGISTER
BIT	**NAME**	**R/W**	**DESCRIPTION**
7:0	FILTER_LEN	R/W	This register holds the number of expected data bytes in a T=0 exchange, for the sake of the T=0 filter state machines. This register is decremented as needed by the outgoing filter state machine. An initial value of 00h, when the outgoing filter is activated, is interpreted as 256. An initial value of 00h, when the incoming filter is activated, is interpreted as 0. Any T=0 command that does not involve a data transfer will use the incoming filter with an initial count of 00h. This register returns the least-significant 8 bits of the current count value when read.

Table 10.51 Smart Card INS Code Register

SC_FINS (0X002D- RESET=0X00)			SMART CARD FILTER STATE MACHINE INS CODE REGISTER
BIT	**NAME**	**R/W**	**DESCRIPTION**
7:0	INS	R/W	This register holds the INS byte for the current T=0 exchange, so that the T=0 Filter state machines can recognize the INS and INS Procedure Bytes

Table 10.52 Smart Card Debounce Register

SC_TEST1 (0X0030, - RESET=0X14)			SMART CARD TEST REGISTERS
BIT	**NAME**	**R/W**	**DESCRIPTION**
7:0	DEBOUNCE_MAX	R/W	This register indicates the debounce counter value for the **SCx_PRSNT_N** signal, in 1 ms resolution. If a value of zero is written, then the debounce logic is avoided, and the **SCx_PRSNT_N** signal is sampled directly. The **DEBOUNCE_CLK_EN** and **DEBOUNCE_FREQ** bits in OSC48_SETTLE_CLKS Register must be enabled for the debouncing to work.

Table 10.53 Smart Card Debounce Register

SC_TEST2 (0X0031, - RESET=0X1F)			SMART CARD TEST REGISTERS
BIT	**NAME**	**R/W**	**DESCRIPTION**
7:2	START_WIDTH_TOL[7:2]	R/W	After the leading edge of the start bit, a check is done for a low on the **SCx_IO** line, for the sample number indicated by this start bit tolerance register before the next bit. If **SCx_IO** is not low at start bit tolerance sample before the next bit, that start bit will be invalidated and the Receiver will search for next start byte. This width check if violated, will likely result in wrong data received with a parity error or TMO.
1	OEN_EXT	RW	When this bit is `0`, it disables the OEN extension feature. The Output enable for the **SCx_IO** pad is driven for one internal Smart Card clock, at the end of transmit, and at the end of parity error signalling. This setting may cause insufficient time, for the **SCx_IO** pad to switch from `0` to `1`, before tristating and enabling the pull-up, during high Smart Card block frequencies. When this bit is `1` (default), it indicates that the Output enable extension for **SCx_IO** is enabled. This setting ensures that a `0` to `1` transition occurs on the pad, and then the pad is tristated and pull-up enabled on **SCx_IO**. The **OEN_CLKS** field indicates the OEN extension time.
0	START_BIT_NEG_EDGE	RW	When this bit is `0`, it indicates the detection of start bit (after a parity error is signalled) occurs when a negative edge is seen on **SCx_IO**. When this bit is `1` (default), it indicates the detection of start bit (after a parity error is signalled) occurs when a `0` level is seen on **SCx_IO**. This setting may cause a parity error signalling to be wrongly identified as the next start bit when the Smart Card block runs internally at high frequencies.

Table 10.54 Smart Card Test Register

SC_TEST3 (0X0032 - RESET=0XFF)			SMART CARD TEST REGISTERS
BIT	**NAME**	**R/W**	**DESCRIPTION**
7:0	TEST3[7:0]	R/W	This field defines the number of SC block clock time between the events ▪ Reset assertion and clock stop during hardware auto-deactivation ▪ Clock stop and SCx_VCC switch off signal to smart card pins

© 2013 Microchip Technology Inc.

Table 10.55 Smart Card Test Register

SC_TEST4 (0X0033~0033, - RESET=0X00)			SMART CARD TEST REGISTERS
BIT	**NAME**	**R/W**	**DESCRIPTION**
7:0	START_WIDTH_TOL[15:8]	R/W	The start width tolerance is a 16-bit wide register. Bits 1:0 are used for OEN_EXT, START_BIT_NEG_EDGE also.

Table 10.56 Smart Card Test Debounce Register

SC_TEST0 (0X0035, - RESET=0X00)			SMART CARD TEST REGISTERS
BIT	**NAME**	**R/W**	**DESCRIPTION**
7:4	Reserved	R	Always read as 0
3:1	OEN_CLKS	R/W	These 3 bits of **FAST_DEBOUNCE[2:0]** are reused as OEN_CLKS field. It indicates the number of internal Smart Card block clocks to extend OEN for **SCx_IO** pad. This field is used when **OEN_EXT** bit is set. `000` : 2 clocks `001` : 2 ~ 4 clocks in SEC1110/SEC1210. 4 clocks in later versions `010` : 4 ~ 8 clocks in SEC1110/SEC1210. 8 clocks in later versions `011` : 8 ~ 16 clocks in SEC1110/SEC1210. 16 clocks in later versions `100` : 16~ 32 clocks in SEC1110/SEC1210. 32 clocks in later versions `101` : 32 ~ 64 clocks in SEC1110/SEC1210. 64 clocks in later versions
0	Reserved	R/W	Must be 0.

Table 10.57 Smart Card FIFO Test Register

SC_FIFO_TEST (0X0100~02FF, - RESET=0XXX)			SMART CARD FIFO TEST1
BIT	**NAME**	**R/W**	**DESCRIPTION**
7:0	FIFO_TEST	R/W	The SC_FIFO is memory mapped to the 8051 CPU on the XDATA bus. Only the first 261 (259 for SEC1110/SEC1210) bytes are valid, and rest is an alias access.

Chapter 11 USB Controller Description

The SEC1110 and SEC1210 implements a USB device controller supporting 12 Mbps data transfer. In addition to the default control Endpoint 0, it provides 5 other endpoints, which can be configured in Control, Bulk, Interrupt or Isochronous modes:

- Endpoint 0: 8/16/32/64-byte buffer, default control endpoint
- Endpoints 1,2,3,4,5: 8/16/32/64 -byte buffer or buffers in ping-pong Mode.

The Digital Phase-Locked Loop (DPLL) blocks main function is to extract the USB clock and data from the USB cable. Its main input is an external differential transceiver. The DPLL block has a built-in digital PLL that runs on a user-provided 48 MHz clock in 12 Mbps configuration. The DPLL block also extracts from the 48 MHz clock, a 12 MHz clock that it can supply to the SIE and UBL blocks.

The D+ and D- signals on the USB lines are passed through a differential receiver (external to the UDC core) and NRZI-formatted data is obtained from the differential receiver output. The DPLL uses this differential receiver output to extract clock information. The DPLL block also has single-ended zero (SE0) detection logic to detect SE0 signals in the data stream on the USB transceiver.

The clock and reset block generates a separate 12 MHz clock, by dividing the reference 48 MHz clock by 4 (for 12 Mbps applications). The UDC core uses this 12 MHz clock, which is also provided on the application bus.

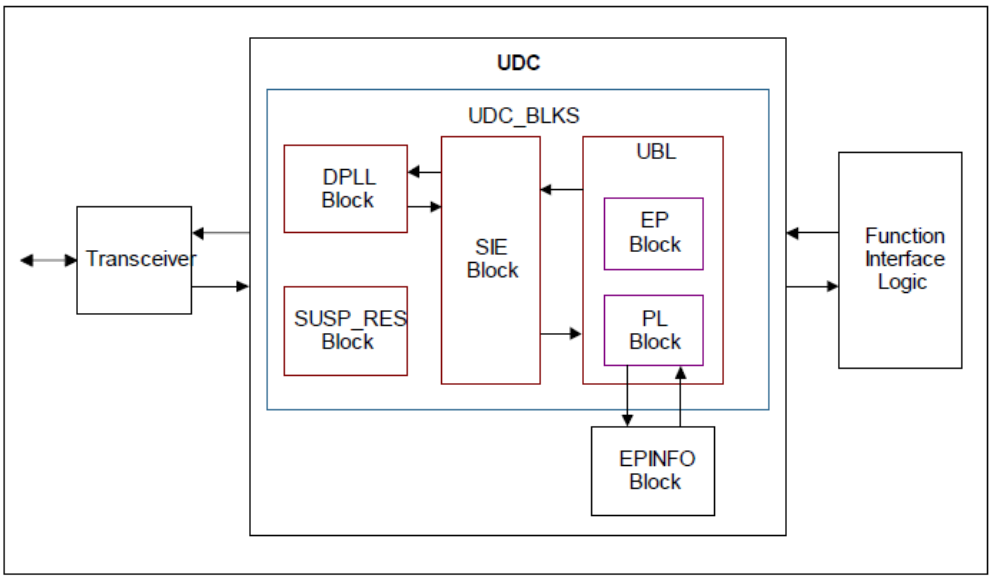

Figure 11.1 USB Block Diagram

The Serial Interface Engine (SIE) block performs all front-end USB protocol functions, such as SYNC field identification, NRZI-NRZ conversion, token packet decoding, bit stripping, bit stuffing, NRZ-NRZI conversion, CRC5 checking, and CRC16 generation and checking. The SIE block also converts serial packets to 8-bit parallel data. The SIE block has a built-in 1-byte buffer for buffering data during transmission and reception of IN, OUT, and setup transactions. The SIE block interfaces to the device logic through the USB bridge layer.

The SIE runs on the 1x clock provided by the DPLL block, even though the data from the USB is received on the USB clock. For actual packet data, the SIE assembles the bits into bytes and forwards them to the application.

The main SIE block functions include:

- SYNC field identification
- NRZI-NRZ conversion during data reception
- Token packet identification
- Data packet identification

© 2013 Microchip Technology Inc.

- Handshake packet identification
- Bit stripping during packet reception
- Bit stuffing during packet transmission
- NRZ-NRZI conversion during data transmission
- CRC5 checking for token packets
- CRC16 generation and checking for data packets
- Time-out checking
- Serial-to-parallel and parallel-to-serial data conversion
- Data/handshake packet assembly
- Identifying the USB Reset signal
- Identifying USB Suspend Mode
- Remote wake-up capability

The USB Bridge Layer (UBL) sits between the SIE block and the function interface on the device side (see Figure 11.1 "USB Block Diagram" on page 118). The UBL's main purposes are to control the SIE block by providing the necessary handshake signals and to transfer data between the SIE block and application bus while handling the application bus protocol.

The UBL handles the error recovery mechanism during transactions while interfacing to the application, and decodes and handles all standard control transfers addressed to Endpoint 0. The UBL passes all vendor and class commands onto the application bus for the application to decode and act on. This provides the flexibility of using the UDC core in multiple applications. The UBL supports an additional single programmable configuration (Configuration 0 has only Endpoint 0), with this configuration having a maximum of 4 interfaces. Each interface can have up to 4 alternate settings. The configuration is loaded from the on-chip ERAM at USB block initialization time to the EPINFO block.

The UBL receives information from the EPINFO block about the characteristics of the endpoint to which the current transaction is addressed. Based on this endpoint information, the UBL issues necessary control signals to the SIE block. The UBL also decodes the standard commands received in Endpoint 0 control transfer setup packets. The UBL forwards vendor and class commands to Endpoint 0 onto the application bus. The Get Descriptor command is forwarded to the application bus.

The USB Bridge:

- Provides a simple read/write interface on the device side.
- Handles all transactions to the standard Endpoint 0, shielding those transactions from the device side of the application bus except for the following:

  Get_Descriptor command, enabling the SW to have programmable configurations

  Set_Descriptor command

  Class and Vendor Specific commands

  Sync_Frame command
- Supports all USB standard commands, decoding and acting on the USB standard commands received in a control transfer's setup transaction.
- Provides a state machine for the current device state (default, addressed, configured, suspended).
- Maintains each endpoint's enabled, disabled, or stalled status. If an endpoint is stalled or disabled, the UDC issues an appropriate handshake to the host. The transaction is not reflected on the application bus (UDC interface) side.
- Forwards all class or vendor control transfers to Endpoint 0 and transactions to non-zero control endpoints. The application must decode 8 setup packet bytes and act on them. The transaction flow is explained in Figure 11.3 on page 121.

The UBL block contains two sub-blocks, called the Protocol Layer (PL) and Endpoint (EP) blocks.

The PL block controls the SIE block by providing necessary handshake signals to the SIE and by interfacing with the application bus logic. It also has an error recovery mechanism for data transfer protocol violations on the application bus. The protocol layer receives input about the endpoint characteristics from the EPINFO block and transfers the data between the SIE interface and the application bus (device interface). In transactions to Endpoint 0 (standard commands), the setup packet is routed to the EP block for decoding.

The EP block handles all control transfers to Endpoint 0. The EP block decodes and responds to all USB standard commands and passes the USB class and vendor commands to the application bus. The EP block maintains buffers for the device address and for storing the present active configuration, and logic for determining the present device state. All other vendor/class commands are forwarded onto the application bus (this includes the control transaction's setup, data and the status stages). The EP block has a buffer that stores the information received in the setup packet and a state machine to decode the setup data. The EP block also maintains the state machine for the current device state.

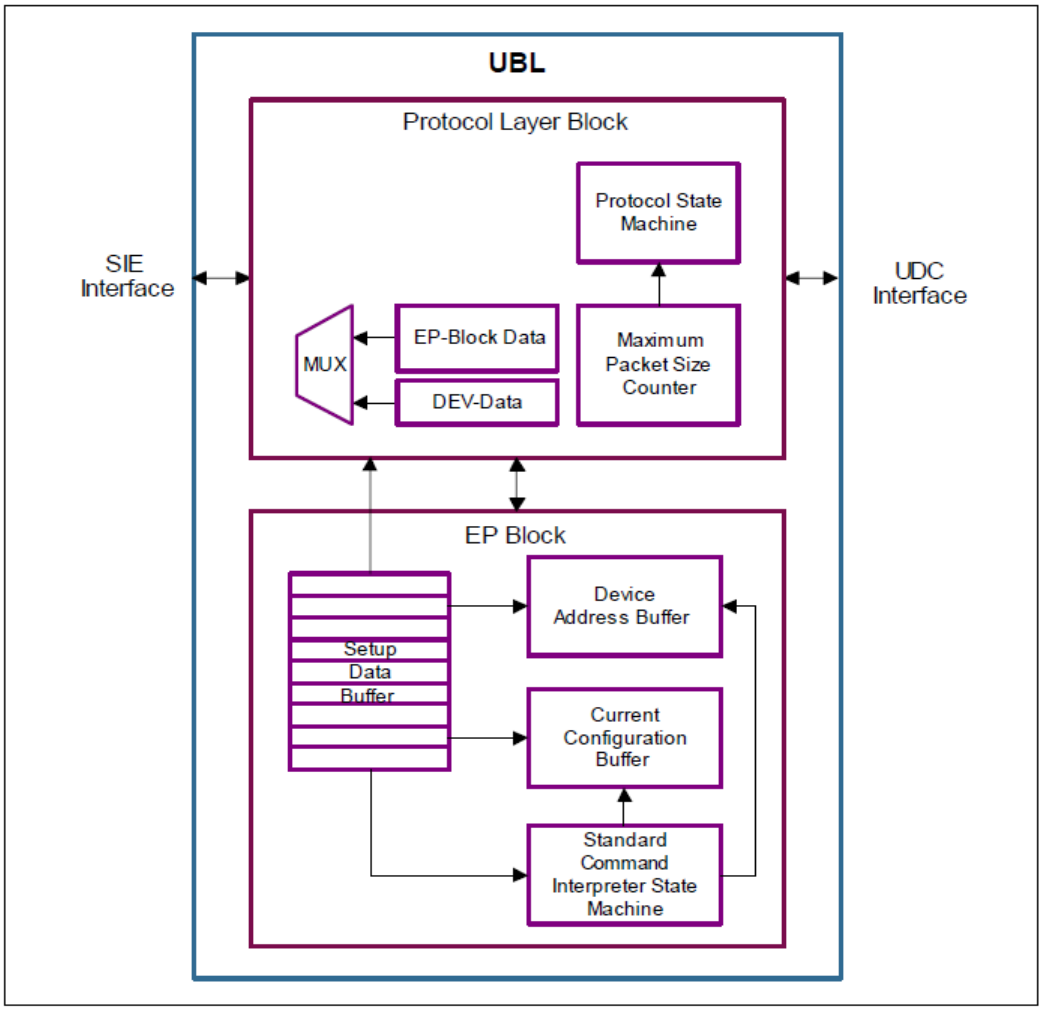

Figure 11.2 USB Bridge Layer

© 2013 Microchip Technology Inc.

11.1 Transaction Flow

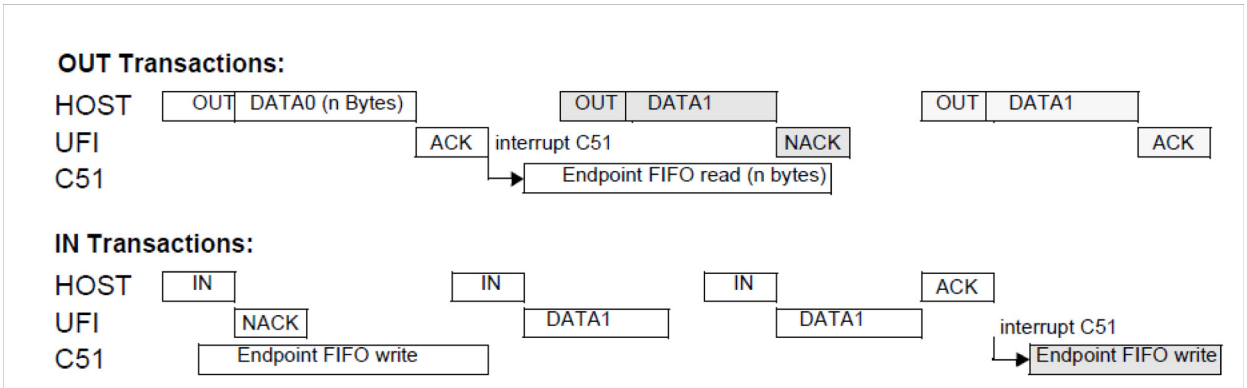

Figure 11.3 Typical Transaction

Note: FIFOs are shown. Should be DPRAM

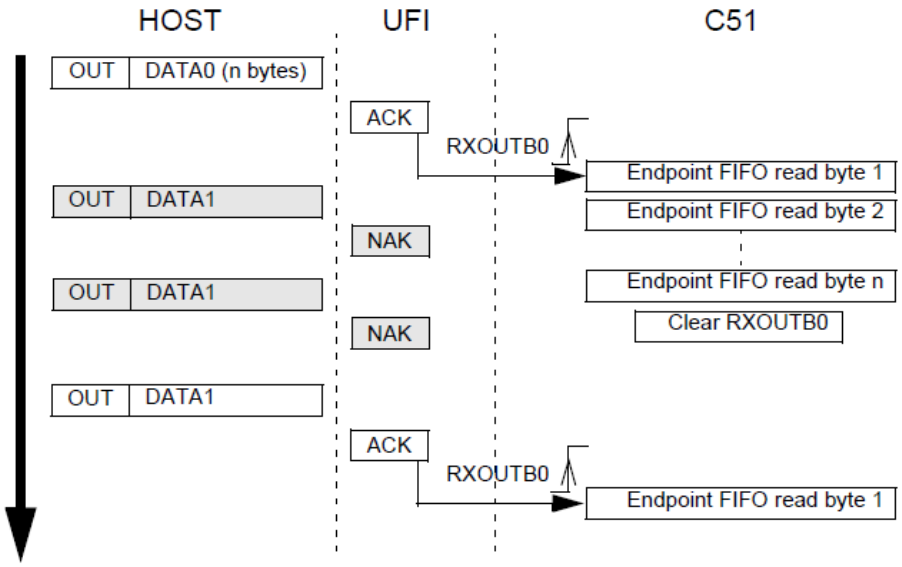

Figure 11.4 Bulk/Interrupt OUT Transaction

An endpoint should first be enabled and configured before being able to receive bulk or interrupt packets. The **PingPong** bit is reset for this endpoint.

When a valid OUT packet is received on an endpoint, the **RXOUTB** (and **BUF0_RDY**) bit is set by the USB controller. This triggers an interrupt, if enabled. The firmware has to select the corresponding endpoint, and store the number of data bytes by reading the COUNT0 Register. If the received packet is a ZLP (Zero Length Packet), the COUNT0 Register value is equal to 0 and no data must be read.

When all the endpoint data bytes have been read, the firmware should clear the **RXOUTB** (or **BUF0_RDY**) bit to allow the USB controller to accept the next OUT packet on this endpoint. Until the **RXOUTB** (or **BUF0_RDY**) bit has been cleared by the firmware, the USB controller will answer a NAK handshake for each OUT requests for this endpoint.

If the Host sends more bytes than supported by the endpoint data buffer, the overflow data would not be stored, but the USB controller will consider that the packet is valid if the CRC is correct and the endpoint byte counter contains the number of bytes sent by the Host.

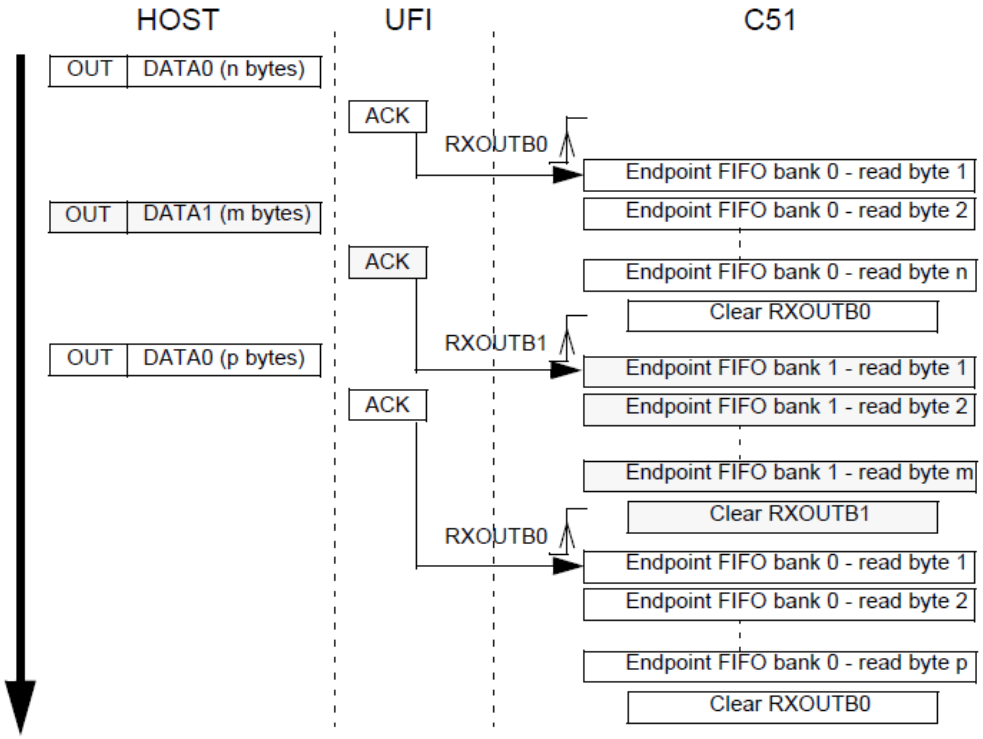

Figure 11.5 Bulk / Interrupt OUT Transaction in Ping-Pong Mode

An endpoint should be first enabled and configured before being able to receive bulk or interrupt packets. The **PingPong** bit is set. When a valid OUT packet is received on the Endpoint Bank 0, the **RXOUTB** (and **BUF0_RDY**) bit is set by the USB controller. This triggers an interrupt, if enabled. The firmware has to select the corresponding endpoint, store the number of data bytes by reading the USB_EPN_BYTE_CNT_REG Register. If the received packet is a ZLP (Zero Length Packet), the COUNT0 Register value is equal to 0 and no data has to be read.

When all the endpoint data bytes have been read, the firmware should clear the **BUF0_RDY** bit to allow the USB controller to accept the next OUT packet on the Endpoint Buffer 0.

When a new valid OUT packet is received on the Endpoint Bank 1, the **RXOUTB** (and **BUF1_RDY**) bit is set by the USB controller. This triggers an interrupt, if enabled. The firmware empties the bank 1 endpoint data before clearing the **BUF1_RDY** bit.

The **BUF0_RDY** and **BUF1_RDY** bits are alternatively set by the USB controller at each new valid packet receipt.

The firmware has to clear one of these two bits after having read all the data to allow a new valid packet to be stored in the corresponding bank.

A NAK handshake is sent by the USB controller only if the banks 0 and 1 have not been released by firmware.

The firmware can reset the hardware pointers by writing a 1 to both **BUF0_RDY** and **BUF1_RDY** in a single write.

© 2013 Microchip Technology Inc.

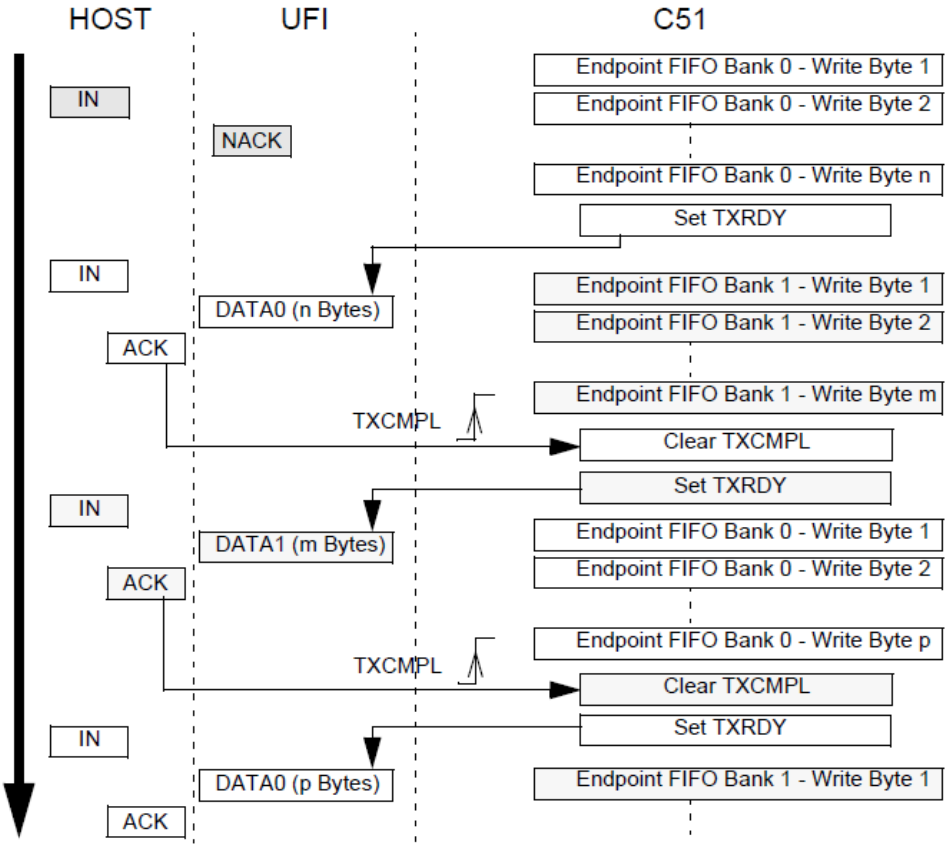

Figure 11.6 Bulk/Interrupt IN Transactions in Ping-Pong Mode

An endpoint will first be enabled and configured before being able to send bulk or interrupt packets with the **PingPong** bit set.

The firmware will fill the data bank 0 with the data to be sent and set the **TXRDY** (or **BUF0_RDY**) bit in the USB_EPn_CTL_REG (or USB_EPn_BUFRDY_REG) Register to allow the USB controller to send the data stored in data at the next IN request concerning the endpoint. The firmware can immediately write into the Endpoint 1 data bank. The firmware can set **BUF1_RDY** bit when this buffer is ready.

When the IN packet concerning the bank 0 has been sent and acknowledged by the Host, the **TXRDY** (and **BUF0_RDY**) bit is reset by the USB controller. This triggers a USB interrupt if enabled. The firmware will check if the **BUF0_RDY** bit is reset before filling the Endpoint 0 Data Bank with new data.

When the IN packet concerning the bank 1 has been sent and acknowledged by the Host, the **TXRDY** (and **BUF1_RDY**) bit is reset by the USB controller. This triggers a USB interrupt if enabled. The firmware will check if the **BUF1_RDY** bit is reset before filling the Endpoint 1 Data Bank with new data.

The bank switch is performed by the USB controller after each packet. Until the **TXRDY** bit has been set by the firmware for an endpoint bank, the USB controller will answer a NAK handshake for each IN requests concerning this bank.

The firmware will never write more bytes than supported by the endpoint data buffer.

11.2 Control Transactions

11.2.1 Setup Stage

Receiving Setup packets is the same as receiving bulk out packets, except that the **RXSETUP** bit in the USB_EPn_CTL_REG Register is set by the USB controller instead of the **RXOUTB** bit to indicate that an Out packet with a Setup PID has been received on the Control Endpoint. When the **RXSETUP** bit has been set, all the other bits

of the USB_EPn_CTL_REG Register are cleared and an interrupt is triggered, if enabled. The firmware has to read the Setup request stored in the Control Endpoint data before clearing the **RXSETUP** bit to free the endpoint data for the next transaction.

11.2.2 Data Stage: Control Endpoint 0 Direction

The data stage management is similar to bulk management.

A control endpoint is managed by the USB controller as a full-duplex endpoint: IN and OUT. All other endpoint types are managed as half-duplex endpoint: IN or OUT.

There are separate Read and Write buffers for Control Endpoint 0.

- If the data stage consists of INs, the firmware writes the data buffer and sets to 1 the **TXRDY** (or **BUF0_RDY**) bit in the USB_EPn_CTL_REG (or USB_EPn_BUFRDY_REG) Register. The IN transaction is complete when the **TXRDY** (or **BUF0_RDY**) bit has been reset by the hardware.
- If the data stage consists of OUTs, the **RXOUTB** (and **BUF0_RDY**) bit is set by hardware when a new valid packet has been received on the endpoint. The firmware must read the data stored into the buffer and then clear the **RXOUTB** (or **BUF0_RDY**) bit to reset the buffer and to allow the next transaction.

To send a STALL handshake, see Section 11.4.

11.2.3 Status Stage

The status stage management is similar to bulk management.

- For a Control Write transaction or a No-Data Control transaction, the status stage consists of a IN Zero Length Packet (see “Bulk/Interrupt IN Transactions In Standard Mode” on page). To send a STALL handshake, see Section 11.4.
- For a Control Read transaction, the status stage consists of an OUT Zero Length Packet.

11.3 USB Reset

The **USB_RESET_INT** bit in the USB_INT_REG Register is set by hardware when a Reset has been detected on the USB bus. This triggers a USB interrupt, if enabled. The USB controller is still enabled. The End of USB Reset can be determined by reading the **USB_RESET_STS** bit in UDC Status Register.

11.4 STALL Handshake

This function is only available for Control, Bulk, and Interrupt endpoints. The firmware has to set the **STALLRQ** bit in the USB_EPn_CTL_REG Register to send a STALL handshake at the next request of the Host on the endpoint. The **RXSETUP**, **TXRDY**, **RXOUTB** bits must be first reset to 0. The bit **UNSUCESSFUL** is set to 1 by the USB controller when a STALL has been sent. This triggers an interrupt if enabled.

The firmware should clear the **STALLRQ** and **UNSUCESSFUL** bits after each STALL sent. The **STALLRQ** bit is cleared automatically by hardware when a valid SETUP PID is received on a Control type endpoint.

11.5 Start of Frame Detection

The **USB_SOF_INT** bit in the USB_INT_REG Register is set when the USB controller detects a Start of Frame PID. This triggers an interrupt if enabled. The firmware should clear the **SOFINT** bit to allow the next Start of Frame detection. The **SOF_MISSED** bit is set if within 16383 FS bits times, a SOF frame is not received. The **SOF_GOOD** bit is set if SOF frame is received and the timestamp matches the expected value. After initialization or loss of frame sync, the timestamp value is loaded when an SOF is received.

11.6 Data Toggle Bit

The Data Toggle bit is set by hardware when a DATA 0 packet is received and accepted by the USB controller and cleared by hardware when a DATA 1 packet is received and accepted by the USB controller. This bit is reset when the firmware resets the endpoint data buffer using the UEPRST Register.

© 2013 Microchip Technology Inc.

For Control endpoints, each SETUP transaction starts with a DATA 0 and data toggling is then used as for Bulk endpoints until the end of the Data stage (for a control write transfer). The Status stage completes the data transfer with a DATA 1 (for a control read transfer).

11.7 NAK Handshakes

When a NAK handshake is sent by the USB controller to a IN or OUT request from the Host, the **UNSUCESSFUL** bit will not be set by hardware.

11.8 Suspend

The Suspend state can be detected by the USB controller if all the USB clocks are enabled and if the USB controller is enabled. The bit **USB_SUSPEND_INT** is set by hardware when an idle state is detected for more than 3 ms. This triggers a USB interrupt, if enabled.

In order to reduce current consumption, the firmware can put the USB pads in suspend Mode, stop the clocks and put the chip in Idle or Power-Down Mode. The Resume detection is still active.

The USB suspend Mode is entered when the firmware sets **PWR_CORE_DIS0** to shutdown LDO3A regulator and then writes to the OSC48_CTL Register. The two writes to these registers must be consecutive. If operating from external clock then **EXT_OSC_SLEEP** bit is set in the second write, and if operating from the internal clock, then **OSC_MODE[2]** bit is set.

The hardware shuts the clocks and the oscillator. It also powers down all the logic except for the USB subsystem, ERAM (optional), IRAM (optional), GPIO logic. Hence the firmware must save all the CPU registers in ERAM before entering suspend Mode. The USB PAD automatically exits from idle Mode when a wake-up event is detected on GPIO or USB pads.

The stop of the 48 MHz clock from the oscillator should be done in the following order:

1. Disable all other peripherals not required during suspend Mode. Save CPU and SFR registers state in ERAM.
2. Disable the oscillator by writing **OSC_MODE[2]** as 0 in the OSC48_CTL Register or enter low power Mode by writing 000b to **OSC_MODE** bits (4 MHz). In case of external oscillator Mode **EXT_OSC_SLEEP** bit is set.

11.9 Resume

When the USB controller is in Suspend state, the Resume detection is active even if all the clocks are disabled and if the chip is in Idle or Power-Down Mode. The **USB_WU_INT** bit is set by hardware when a non-idle state occurs on the USB bus. This triggers an interrupt if enabled. This interrupt wakes up the oscillator and CPU from its idle or power-down state and the interrupt function is then executed. The firmware will first enable the 48 MHz generation.

The firmware has to clear the **USB_WU_INT** bit in the USB_INT_REG Register before any other USB operation in order to wake up the USB controller from its Suspend Mode. The USB controller is then re-activated.

11.10 Remote Wake-Up

A USB device can be allowed by the Host to send an upstream resume for Remote Wake-Up purpose. The firmware must set the **USB_REMOTE_WU_CAP** bit indicating to the core that the device is remote wake-up capable. The USB controller automatically responds to Set Feature and Clear Feature commands for the Remote Wake-Up capability.

If the device is in SUSPEND Mode, and the device is in low power state, the USB controller can send an upstream Resume by setting to 1 the **USB_REMOTE_WU** bit in the USB_UDC_CTL Register. All clocks must be enabled first. The UDC core ensures that the bus was idle for 6 ms before indicating Suspend. Hence the Resume would be initiated immediately after **USB_REMOET_WU** bit is set. When the upstream Resume is completed, the **USB_REMOTE_WU** bit is reset to 0 by hardware. The firmware should then clear the **USB_WU_INT** interrupt bit.

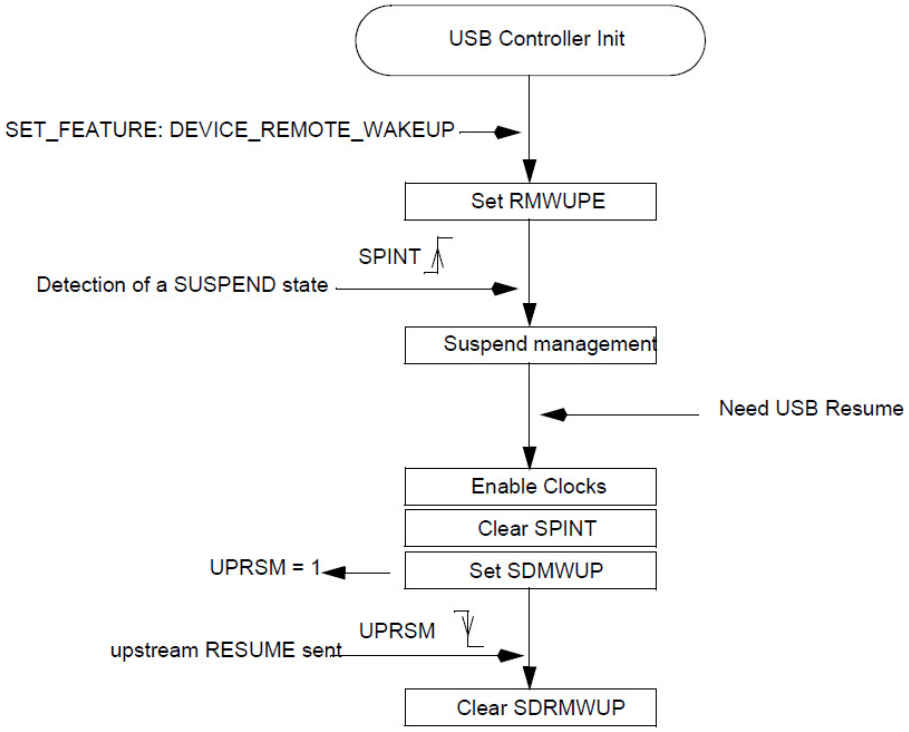

Figure 11.7 USB Remote Suspend/Resume

© 2013 Microchip Technology Inc.

11.11 USB Registers Summary

The USB registers are at XDATA base address 0x9600.

Table 11.1 USB Register Offsets

XDATA OFFSET	REGISTER NAME	EC TYPE
0x00	USB_CFGL_ADDR_REG	R/W
0x01	USB_CFGH_ADDR_REG	R/W
0x02	USB_CFG_STS_REG	R
0x03	USB_UDC_CONTROL	R/W
0x04	USB_STS_REG	R
0x05	USB_SOF_REG	R
0x06	USB_INT_REG	R/W
0x07	USB_ISR_EN_REG	R/W
0x08	USB_EP0_CTL_REG	R/W
0x09	USB_EP1_CTL_REG	R/W
0x0A	USB_EP2_CTL_REG	R/W
0x0B	USB_EP3_CTL_REG	R/W
0x0C	USB_EP4_CTL_REG	R/W
0x0D	USB_EP5_CTL_REG	R/W
0x0E	USB_EP0W_ADDRL_REG	R/W
0x0F	USB_EP0W_ADDRH_REG	R/W
0x10	USB_EP0W_BYTE_CNT_REG	R/W
0x11	USB_EP0R_ADDRL_REG	R/W
0x12	USB_EP0R_ADDRH_REG	R/W
0x13	USB_EP0R_BYTE_CNT_REG	R/W
0x14	USB_EP1_ADDRL_REG	R/W
0x15	USB_EP1_ADDRH_REG	R/W
0x16	USB_EP1_CNT_REG	R/W
0x17	USB_EP1_BUFRDY_REG	R/W
0x18	USB_EP2_ADDRL_REG	R/W
0x19	USB_EP2_ADDRH_REG	R/W
0x1A	USB_EP2_CNT_REG	R/W
0x1B	USB_EP2_BUFRDY_REG	R/W
0x1C	USB_EP3_ADDRL_REG	R/W
0x1D	USB_EP3_ADDRH_REG	R/W

© 2013 Microchip Technology Inc.

Table 11.1 USB Register Offsets

XDATA OFFSET	REGISTER NAME	EC TYPE
0x1E	USB_EP3_CNT_REG	R/W
0x1F	USB_EP3_BUFRDY_REG	R/W
0x20	USB_EP4_ADDRL_REG	R/W
0x21	USB_EP4_ADDRH_REG	R/W
0x22	USB_EP4_CNT_REG	R/W
0x23	USB_EP4_BUFRDY_REG	R/W
0x24	USB_EP5_ADDRL_REG	R/W
0x25	USB_EP5_ADDRH_REG	R/W
0x26	USB_EP5_CNT_REG	R/W
0x27	USB_EP5_BUFRDY_REG	R/W
0x28	USB_EP_ISR_REG	R/W
0x29	USB_EP_ISR_EN_REG	R/W
0x2A	USB_EP1_CNT1_REG	R/W
0x2B	USB_EP2_CNT1_REG	R/W
0x2C	USB_EP3_CNT1_REG	R/W
0x2D	USB_EP4_CNT1_REG	R/W
0x2E	USB_EP5_CNT1_REG	R/W

11.12 USB Configuration Registers

The USB core is configured at initialization time. The configuration data is written to on-chip ERAM memory, and the start address is written to the USB_CFGL_ADDR Register, then the USB_CFGH_ADDR Register. The UDC core loads this data once at initialization time.

Table 11.2 USB Config Address Low Register

USB_CFGL_ADDR_REG (0X9600 RESET=0X00			**USB Config Address Low Register**
BIT	**NAME**	**R/W**	**DESCRIPTION**
7:0	USB_CFG_AdrPtr[7:0]	R/W	Address pointer (lower 8 bits) in on-chip ERAM for the configuration data. The USB core loads 30 bytes from this location.

© 2013 Microchip Technology Inc.

Table 11.3 USB Config Address High Register

USB_CFGH_ADDR_REG (0X9601 RESET=0X00			USB Config Address High Register
BIT	**NAME**	**R/W**	**DESCRIPTION**
15	USB_CFG_LoadCfgData	R/W	This bit if set enables the USB to be configured. This must be done only once after reset. The USB core reads 30 bytes from USB_CFG_AdrPtr to the EPINFO block.
14	USB_CFG_LoadCfgDone	R	This bit if set indicates that the USB core has read all 30 bytes from USB_CFG_AdrPtr to the EPINFO block, and load configuration is done. The USB core is ready for normal operation.
13:12	Reserved	R	Always read as 0
11:8	USB_CFG_AdrPtr[11:8]	R/W	Address pointer (higher 4 bits) in on-chip ERAM for the configuration data. The USB core loads 30 bytes from this location.

The UDC core automatically handles commands such as Set Configuration, Set Interface (with Alternative Interface settings). The current configuration, Interface and Alternate Interface values are indicated in Table 11.4, "USB Config Status Register". Any update to this register would cause an interrupt.

Table 11.4 USB Config Status Register

USB_CFG_STS_REG (0X9602 RESET=0X00			USB Config Status Register
BIT	**NAME**	**R/W**	**DESCRIPTION**
7:6	Reserved	R	Always read as 0
5:4	Alt_InterfaceVal[1:0]	R	These bits indicate the Alternate Settings value to which a Set Interface Setup Command is addressed.
3:2	InterfaceVal[1:0]	R	These bit indicate the Interface value to which a Set Interface Setup Command is addressed.
1:0	ConfigVal[1:0]	R	These bits indicate the new Configuration value of a Set Configuration Setup Command. On an update to the **ConfigVal** field, the **InterfaceVal** and **Alt_InterfaceVal** fields are reset to zero.

The configuration data for the 6 maximum physical endpoints possible, consists of 6 40-bit values (30 bytes), with each value written most significant byte first (at lower address memory). This format is shown in Table 11.5, "EndPoint 0-5 Config Memory".

The Endpoint 0 is common to all configurations and interfaces of the device. The UDC core ignores the programmed value of **Ep_Config**, **Ep_Interface**, **Ep_AltSettings** for Endpoint 0.

Note: The USB core successfully completes the status stage for the SET_INTERFACE command as long as the interface and alternate setting specified in the command is less than five, regardless of the actual number of interfaces/alternate settings reported in the configuration descriptor and interface descriptor by firmware. Typically hosts do not send SET_INTERFACE to interface/alternate settings that is not reported by the device. For example, if the device reports 2 interfaces and 3 alternate settings, the commands will complete successfully, which is correct. A problem would arise only if a host issues SET_INTERFACE to interface 4 even if the device supports only 3 interfaces.

Table 11.5 EndPoint 0-5 Config Memory

USB_EP_0_CFG(0X00~0X04 RESET=0XXX USB_EP_1_CFG (0X05~0X09 RESET=0XXX USB_EP_2_CFG (0X0A~0X0E RESET=0XXX USB_EP_3_CFG (0X0F~0X13 RESET=0XXX USB_EP_4_CFG (0X14~0X18 RESET=0XXX USB_EP_5_CFG (0X19~0X1D RESET=0XXX			**EndPoint 0-5 Config Memory**
BIT	**NAME**	**BYTE**	**DESCRIPTION**
7:4	EpNum	0	Logical Endpoint Number: The valid values are 0, 1, 2, 3, 4, 5.
3:2	Ep_Config		Configuration number to which the endpoint belongs: ▪ Must be 0 for Endpoint 0 ▪ Value for other endpoints is 1 (one other configuration supported)
1:0	Ep_Interface		Interface number to which the endpoint belongs: ▪ Must be 0 for Endpoint 0 ▪ Value for other endpoints is up to the maximum number of interfaces supported as reported in the Descriptor

© 2013 Microchip Technology Inc.

Table 11.5 EndPoint 0-5 Config Memory

USB_EP_0_CFG(0X00~0X04 RESET=0XXX USB_EP_1_CFG (0X05~0X09 RESET=0XXX USB_EP_2_CFG (0X0A~0X0E RESET=0XXX USB_EP_3_CFG (0X0F~0X13 RESET=0XXX USB_EP_4_CFG (0X14~0X18 RESET=0XXX USB_EP_5_CFG (0X19~0X1D RESET=0XXX			**EndPoint 0-5 Config Memory**
BIT	**NAME**	**BYTE**	**DESCRIPTION**
7:6	Ep_AltSetting	1	Alternate setting to which the endpoint belongs: ▪ Must be 0 for Endpoint 0 ▪ Value for other endpoints is up to the maximum number of interfaces supported as reported in the Descriptor
5:4	Ep_Type		Endpoint type: `00` : Control `01` : Reserved `10` : Bulk `11` : Interrupt Must be 00 for Endpoint 0. The values for other endpoints is user programmable as 01, 10, 11, and is same as reported in the Descriptor.
3	Ep_Dir		Endpoint direction: `0` : OUT Endpoint `1` : IN Endpoint This bit is ignored for control endpoints. Must be 0 for Endpoint 0. Value for other endpoints is programmable, and is the same as reported in the Descriptor.
2:0	Ep_MaxPktSize[9:7]		Maximum packet size for this endpoint (64 Max). The valid values are 8: 00_0000_1000b 16: 00_0001_0000b 32: 00_0010_0000b 64: 00_0100_0000b
7:1	Ep_MaxPktSize[6:0]	2	
0	Ep_UserBit		This bit is reflected to the application bus as the UDC_UserBit signal for the transaction to this particular endpoint. ▪ Must be 1 for endpoints 2 and 3 ▪ It is 0 for all other endpoints
7:0	Ep_BufAdrPtr[15:8], Ep_BufAdrPtr[7:0]	3, 4	Address pointer for the associated endpoint is encoded as follows: Ep_BufAdrPtr15 = EP_Dir Ep_BufAdrPtr[14:12] = EpNum[2:0] (The physical endpoint number 0~5) Ep_BufAdrPtr[11:10] = Ep_Config[1:0] Ep_BufAdrPtr[9:8] = Ep_Interface[1:0] Ep_BufAdrPtr[7:6] = Ep_AltSettings[1:0] Ep_BufAdrPtr[5:4] = Ep_Type[1:0] Ep_BufAdrPtr[3:0] = Ep_MaxPktSize[6:3]

11.13 USB Control, Status and Interrupt Registers

Table 11.6 USB UDC Control Registers

USB_UDC_CONTROL (0X9603RESET=0X01			**USB UDC Control Registers**
BIT	**NAME**	**R/W**	**DESCRIPTION**
7	USB_RTEST	R/W	This test bit must be 0 for proper USB operation. Setting this bit to 0 (default) causes opening of SW2 for Resistor pull-up (causes high impedance) in transmission Mode. When this bit is set to 1, SW2 for resistor pull-up is closed in transmission Mode.
6	Reserved	R/W	Reserved as a test bit If this bit is zero, the Rpu SW2 switch toggles on a J-to-K transition detected on USB bus in Receive mode within 0.5 to 0.75 bit time. If this bit is one, the Rpu SW2 switch toggles on a J-to-K transition detected on USB bus in Receive mode within 0.25 to 0.5 bit time.
5:4	Reserved	R	Always read as 0
3	USB_SELF_POWER	R/W	This bit if set indicates that the device is self powered. This bit if reset indicates that the device is VBUS powered.
2	USB_REMOTE_WU	R/W	If the USB device is in SUSPEND and remote wake-up has been enabled, setting this bit to 1 will generate a 3ms wake-up event on the USB bus. This bit will auto clear.
1	USB_REMOTE_WU_CAP	R/W	This bit when set indicates to the UDC core that the device is remote wake-up capable. The UDC core responds to the Set/Clear Feature (DEVICE_REMOTE_WAKEUP) command if this bit is set. If this bit is reset, then the UDC responds to such a Set/Clear Feature (DEVICE_REMOTE_WAKEUP) command with a Stall.
0	USB_DETACH	R/W	Detach from USB: Remove 1.5 kΩ pull-up `0` : Attach - the USB core follows the resistor_ecn specification defined for USB 2.0 specification. `1` : Detach

Table 11.7 USB UDC Status Register

USB_STS_REG (0X9604 RESET=0X00			**USB Status Register**
BIT	**NAME**	**R/W**	**DESCRIPTION**
7:5	USB_TIMESTAMP[10:8]	R	This field indicates the higher 3-bits of the time stamp received on a valid SOF.
4	UDC_REMOTE_STS	R	This bit, if set indicates the host has enabled the device for Remote wake-up using the Set_Feature (DEVICE_REMOTE_WAKEUP) Command. This bit is relevant only if **USB_REMOTE_WU_CAP** bit is 1.

© 2013 Microchip Technology Inc.

Table 11.7 USB UDC Status Register (continued)

USB_STS_REG (0X9604 RESET=0X00			USB Status Register
BIT	**NAME**	**R/W**	**DESCRIPTION**
3	SOF_GOOD	R	This bit is set when received SOF timestamps compare with the expected value. This bit is reset when SOF is missed or when timestamp does not compare with expected value.
2	SOF_MISSED	R	This bit is set when an SOF is not received within 16383 FS bit times. This bit is reset when this register is read.
1	USB_RESET_STS	R	This bit is set when the core detects more than 2.5 µS (32 FS bit times) of SE0 on the D+ and D- lines. It continues to be set as long as SE0 is seen on the D+/D- lines. This bit resets when the USB lines change from SE0 after a USB reset condition.
0	USB_SUSPEND_STS	R	This bit is set by hardware when a USB Suspend is detected (idle for 6 ms). This bit remains asserted until a non-idle (K) state is on the USB cable or the **USB_REMOTE_WU** bit is asserted.

Table 11.8 USB SOF Register

USB_SOF_REG (0X9605 RESET=0X00			USB SOF Register
BIT	**NAME**	**R/W**	**DESCRIPTION**
7:0	USB_TIMESTAMP[7:0]	R	This field indicates the lower 8-bits of the time stamp received on a valid SOF.

Table 11.9 USB Interrupt Register

USB_INT_REG (0X9606 RESET=0X00			USB Interrupt Register
BIT	**NAME**	**R/W**	**DESCRIPTION**
7	USB_WU_INT	R/W1C	USB Wake Up CPU Interrupt: This bit is set when the USB controller is in the SUSPEND State and is activated by a non-idle signal from the USB line. This bit is cleared by software.
6	USB_RESET_INT	R/W1	This bit is set when the core detects more than 2.5 µS (32 FS bit times) of SE0 on the D+ and D- lines. It continues to be set as long as SE0 is seen on the D+/D- lines. This bit should be reset by software.
5	USB_SOF_INT	R/W1	This bit is set when an USB Start of Frame PID (SOF) has been successfully received.This bit should be cleared by software.
4:2	Reserved	R	Always read as 0

Table 11.9 USB Interrupt Register (continued)

USB_INT_REG (0X9606 RESET=0X00			USB Interrupt Register
BIT	**NAME**	**R/W**	**DESCRIPTION**
1	USB_CFG_STS_INT	R/W1	This bit is set when an update to the USB Configuration Status Register occurs for the following conditions: ▪ A Set Configuration setup command is received and Config_Val[1:0] is updated. ▪ A Set Interface setup command is received and Interface_Val[1:0] and Alt_InterfaceVal[1:0] are updated.
0	USB_SUSPEND_INT	R/W1	This bit is set by hardware when a USB Suspend is detected (idle for 6 ms). This bit should be cleared by software before powering down the microcontroller.

The USB Interrupt register bits are cleared by software by writing a 1 in the corresponding bit.

Table 11.10 USB Interrupt Enable Register

USB_ISR_EN_REG (0X9607 RESET=0X00			USB Interrupt Enable Register
BIT	**NAME**	**R/W**	**DESCRIPTION**
7	USB_WU_INT_EN	R/W	Set this bit to enable the USB Wake Up CPU Interrupt. Clear this bit to disable the USB Wake Up CPU Interrupt.
6	USB_RESET_INT_EN	R/W	Set this bit to enable the USB_RESET CPU Interrupt. Clear this bit to disable the USB_RESET CPU Interrupt.
5	USB_SOF_INT_EN	R/W	Set this bit to enable the USB SOF CPU Interrupt. Clear this bit to disable the USB SOF CPU Interrupt.
4:2	Reserved	R	Always read as 0
1	USB_CFG_STS_EN	R/W	Set this bit to enable the USB_CFG_STS Update Interrupt. Clear this bit to disable the USB_CFG_STS Update Interrupt.
0	USB_SUSPEND_INT_EN	R/W	Set this bit to enable the USB SUSPEND CPU Interrupt. Clear this bit to disable the USB SUSPEND CPU Interrupt.

© 2013 Microchip Technology Inc.

11.14 USB Endpoint 0~5 Status and Control Registers

Table 11.11 USB Endpoint 0~5 Status and Control Register

USB_EP0_CTL_REG (0X9608 RESET=0X00 USB_EP1_CTL_REG (0X9609 RESET=0X00 USB_EP2_CTL_REG (0X960A RESET=0X00 USB_EP3_CTL_REG (0X960B RESET=0X00 USB_EP4_CTL_REG (0X960C RESET=0X00 USB_EP5_CTL_REG (0X960D RESET=0X00			**USB Endpoint 0~5 Status and Control Register**
BIT	**NAME**	**R/W**	**DESCRIPTION**
7	TIMEOUT	R	This bit is valid when the UNSUCESSFUL bit is set. This bit is set when a USB timeout occurs for this endpoint.
6	STALL_CLR_EP0_HLT	R/W	This bit is valid only for Endpoint 0: This bit controls the behavior of response to the Clear Feature (ENDPOINT0 HALT) command. When this bit is set, the UDC core will send STALL for such a command. If this bit is reset, the core will send an ACK response.
5	STALLRQ	R/W	Stall Handshake Request Set this bit to request a STALL response to the next handshake. Clear this bit otherwise. For Control endpoints, it is cleared by hardware when a valid SETUP PID is received. This bit is cleared when RXSETUP is set. If a Clear Feature command is received, then any new transaction on this endpoint will depend on the status of this bit, whether it will be accepted (bit is reset), or it is stalled again (bit is still set).
4	TXRDY	R/W	TX Packet Ready: Set this bit after a valid packet has been placed into the endpoint buffer for IN transfers. This bit is reset by hardware after the host has acknowledged the packet for Control, Bulk, or Interrupt endpoints.This bit is reset by hardware after data is transmitted for Isochronous IN endpoints. When this bit is cleared, the Endpoint Interrupt is triggered (if enabled). In PingPong Mode, for an IN transaction, this bit is set if either **BUF0_RDY** or **BUF1_RDY** are set.
3	UNSUCCESSFUL	R/W1	Unsuccessful USB Transaction: This bit is set for the following conditions: ▪ A STALL handshake has been sent as requested by STALLRQ ▪ USB timeout ▪ Error in data packet on USB If this bit is set, the application must reset its buffer pointers to restart the transaction and ignore the data received in the current transaction. If a NAK is issued, the **NAK** bit is set. The **UNSUCCESSFUL** bit is write one to clear.

Table 11.11 USB Endpoint 0~5 Status and Control Register (continued)

USB_EP0_CTL_REG (0X9608 RESET=0X00 USB_EP1_CTL_REG (0X9609 RESET=0X00 USB_EP2_CTL_REG (0X960A RESET=0X00 USB_EP3_CTL_REG (0X960B RESET=0X00 USB_EP4_CTL_REG (0X960C RESET=0X00 USB_EP5_CTL_REG (0X960D RESET=0X00			**USB Endpoint 0~5 Status and Control Register**
BIT	**NAME**	**R/W**	**DESCRIPTION**
2	RXSETUP	R/W1	Received SETUP: This bit is set by hardware when a valid SETUP packet has been received from the host. Then, all of the other bits of the register are cleared by hardware and the Endpoint Interrupt is triggered (if enabled). It should be cleared by the device software after reading the SETUP data from the endpoint data buffer. Any data on Endpoint 0 write buffer may be overwritten, on reception of a setup packet. **Note:** Even if an incomplete setup packet is received (i.e., an error was detected, or the UDC core internally handles it), the received bytes are written to the Endpoint 0 write buffer. Additionally, the address and count registers are reset. The **RXSETUP** bit is write one to clear.
1	RXOUTB	R/W1	Received OUT Data Bank: This bit is set by hardware after a new packet has been stored in the Endpoint 0 data buffer. If PingPong is enabled, then this bit is set when either buffer 0 or 1 is full (**BUF0_RDY** or **BUF1_RDY** is set). Then, the Endpoint Interrupt is triggered if enabled. All following OUT packets to the Endpoint Bank 0 are rejected (NAK'd) until this bit has been cleared. (If PingPong is enabled, NAK is sent if both buffers are full), except for Isochronous endpoints. However, for Control endpoints, an early SETUP transaction (RXOUTB is not set), may overwrite the contents of the endpoint data buffer, even if its data packet is received while this bit is set. This bit should be cleared by software after reading the OUT data from the endpoint buffer. The **RXOUTB** bit is write one to clear.
0	NAK	R	This bit is set when a NAK handshake is issued for this endpoint.

11.15 USB Endpoint 0 Buffer Registers

The endpoint buffers (0~5) are part of the on-chip ERAM memory, and its start locations are programmable. The firmware views the buffers as memory mapped.

The bi-directional control Endpoint 0 has 2 DMA buffers, one for write, and one for read. It is possible that there is write data in Endpoint 0 Write Buffer, when a Setup packet is received. The USB controller would reset the Address pointer and Count for Endpoint 0 Write Buffer automatically, enabling reception of this packet. Some of the Setup packets are handled by the UDC core automatically. As the USB bytes are received, the data is stored in Endpoint

© 2013 Microchip Technology Inc.

0 Write Buffer. But if the UDC core can handle it internally, then the Endpoint 0 Write Address and count registers are reset automatically, and a packet reception is informed to the CPU as an OVERWRITE.

Table 11.12 USB Endpoint 0 Write Address Low Register

USB_EP0W_ADDRL_REG (0X960E RESET=0X00)			USB Endpoint Write Address Low Register
BIT	**NAME**	**R/W**	**DESCRIPTION**
7:0	AdrPtr[7:0]	R/W	Base Address lower bits pointing to on-chip ERAM for the Endpoint 0 Write Data. The address must be aligned to an address boundary which is a multiple of the size. 8B buffer: AdrPtr[2:0] must be 000 16B buffer: AdrPtr[3:0] must be 0000 32B buffer: AdrPtr[4:0] must be 00000 64B buffer: AdrPtr[5:0] must be 000000 As each byte is transferred to USB, this register increments and points to the next address. The address rolls over based on the size of the buffer.

Table 11.13 USB Endpoint 0 Write Address High Register

USB_EP0W_ADDRH_REG (0X960F RESET=0X00)			USB Endpoint 0 Write Address High Register
BIT	**NAME**	**R/W**	**DESCRIPTION**
7	Reserved	R	Always read as 0
6	Reserved	R	Always read as 0
5:4	Size	R/W	This field indicates the Endpoint 0 buffer size: `00` : 8B buffer `01` : 16B buffer `10` : 32B buffer `11` : 64B buffer
3:0	AdrPtr[11:8]	R/W	Base Address higher bits pointing to on-chip ERAM for the Endpoint 0 write data.

Table 11.14 USB Endpoint 0 Write Byte Count Register

USB_EP0W_BYTE_CNT_REG (0X9610 RESET=0X00)			USB Endpoint 0 Byte Count Register
BIT	**NAME**	**R/W**	**DESCRIPTION**
7	OVERWRITE	R	This bit is set when a Setup packet is received from the USB, and the previous buffer data has not been read by the software yet. The software must ignore the previous USB command and respond to the Setup command.

Table 11.14 USB Endpoint 0 Write Byte Count Register (continued)

USB_EP0W_BYTE_CNT_REG (0X9610 RESET=0X00)			USB Endpoint 0 Byte Count Register
BIT	**NAME**	**R/W**	**DESCRIPTION**
6:0	COUNT	R/W	Byte Count: This is the number of valid bytes that have been received. This value will never be greater than the MaxPktSize for the endpoint. As bytes are received from the USB, this counter increments. If the packet was not received successfully, then it is automatically reset to 0. The Count Register is also cleared when the **RXOUTB** bit for EP0 is reset by firmware.

Note: *Anomaly 10* in SEC1110/SEC1210 chip: when a SETUP packet overwrites an earlier SETUP/OUT packet in Endpoint 0 the write buffer may show a byte-count other than 8 in the USB_EP0W_BYTE_CNT_REG. The byte-count could be the sum of the previous packet and the current packet. Since SETUP packets are always 8 bytes, firmware must ignore the USB_EP0W_BYTE_CNT_REG and assume that 8 bytes were received unless an error was indicated. This anomaly is fixed in SEC1110/SEC1210.

Table 11.15 USB Endpoint 0 Read Address Low Register

USB_EP0R_ADDRL_REG (0X9611 RESET=0X00)			USB Endpoint Read Address Low Register
BIT	**NAME**	**R/W**	**DESCRIPTION**
7:0	AdrPtr[7:0]	R/W	Base Address lower bits pointing to on-chip ERAM for the Endpoint 0 read data. The address must be aligned to an address boundary which is a multiple of the size. 8B buffer: AdrPtr[2:0] must be 000b 16B buffer: AdrPtr[3:0] must be 0000b 32B buffer: AdrPtr[4:0] must be 00000b 64B buffer: AdrPtr[5:0] must be 000000b As each byte is transferred to USB, this register increments and points to the next address. The address rolls over based on the size of the buffer.

Table 11.16 USB Endpoint 0 Read Address High Register

USB_EP0R_ADDRH_REG (0X9612 RESET=0X00)			USB Endpoint 0 Read Address High Register
BIT	**NAME**	**R/W**	**DESCRIPTION**
7	Reserved	R	Always read as 0
6	Reserved	R	Always read as 0.

© 2013 Microchip Technology Inc.

Table 11.16 USB Endpoint 0 Read Address High Register

USB_EP0R_ADDRH_REG (0X9612 RESET=0X00)			USB Endpoint 0 Read Address High Register
BIT	**NAME**	**R/W**	**DESCRIPTION**
5:4	Size	R/W	This field indicates the Endpoint 0 buffer size: 00 : 8B buffer 01 : 16B buffer 10 : 32B buffer 11 : 64B buffer
3:0	AdrPtr[11:8]	R/W	Base Address higher bits pointing to on-chip ERAM for the Endpoint 0 read data.

Table 11.17 USB Endpoint 0 Read Byte Count Register

USB_EP0R_BYTE_CNT_REG (0X9613 RESET=0X00)			USB Endpoint 0 Read Byte Count Register
BIT	**NAME**	**R/W**	**DESCRIPTION**
7	Reserved	R	Always read as 0
6:0	COUNT	R/W	This field is the number of valid bytes to send in the next IN. This value should never be greater than the MaxPktSize for the endpoint. As the bytes are transferred over USB, this register decrements, and it indicates the number of bytes left in the buffer.

11.16 Endpoints 1~5 Buffer Registers

Each endpoints numbered 1~5 may be configured to be used with the UDC core or SPI1 or UART, as indicated by the **PERIPHERAL[1:0]** bits. Each of these may be configured as IN (data is transmitted) or OUT (data is received) endpoint as indicated by the **Direction** bit.

Table 11.18 USB Endpoint 1-5 Address Low Register

USB_EP1_ADDRL_REG (0X9614 RESET=0X00) USB_EP2_ADDRL_REG (0X9618 RESET=0X00) USB_EP3_ADDRL_REG (0X961C RESET=0X00) USB_EP4_ADDRL_REG (0X9620 RESET=0X00) USB_EP5_ADDRL_REG (0X9624 RESET=0X00)			USB Endpoint 1-5 Address Low Register
BIT	**NAME**	**R/W**	**DESCRIPTION**
7:0	AdrPtr[7:0]	R/W	Base Address lower bits pointing to on-chip ERAM for the Endpoint 1-5 read/write data. The address must be aligned to an address boundary which is a multiple of the size. 8B buffer: AdrPtr[2:0] must be 000b 16B buffer: AdrPtr[3:0] must be 0000b 32B buffer: AdrPtr[4:0] must be 00000b 64B buffer: AdrPtr[5:0] must be 000000b

Table 11.19 USB Endpoint 1~5 Address High Register

USB_EP1_ADDRH_REG (0X9615 RESET=0X00) USB_EP2_ADDRH_REG (0X9619 RESET=0X00) USB_EP3_ADDRH_REG (0X961D RESET=0X00) USB_EP4_ADDRH_REG (0X9621 RESET=0X00) USB_EP5_ADDRH_REG (0X9625 RESET=0X00)			**USB Endpoint 1~5 Write Address High Register**
BIT	**NAME**	**R/W**	**DESCRIPTION**
7	Direction	R/W	This bit indicates the direction of the endpoint. `0` : OUT (data is received) `1` : IN (data is transmitted)
6	PingPong	R/W	If the **PingPong** bit is set, then there are 2 Size buffers allocated for this endpoint. The AdrPtr[7:0] field must be aligned to an address boundary which is a multiple of twice that of *Size*.
5:4	Size	R/W	This field indicates the endpoint buffer size: `00` : 8B buffer `01` : 16B buffer `10` : 32B buffer `11` : 64B buffer
3:0	AdrPtr[11:8]	R/W	Base Address higher bits pointer to on-chip ERAM for the endpoint 1~5 data.

The USB firmware must maintain a copy of the **PingPong** bit in firmware to distinguish which buffer was first received/transmitted when both buffers are full.

Table 11.20 USB Endpoint 1~5 Byte Count0 Register

USB_EP1_CNT_REG (0X9616 RESET=0X00) USB_EP2_CNT_REG (0X961A RESET=0X00) USB_EP3_CNT_REG (0X961E RESET=0X00) USB_EP4_CNT_REG (0X9622 RESET=0X00) USB_EP5_CNT_REG (0X9626 RESET=0X00)			**USB Endpoint 1~5 Byte Count0 Register**
BIT	**NAME**	**R/W**	**DESCRIPTION**
7	Reserved	R	Always read as 0

© 2013 Microchip Technology Inc.

Table 11.20 USB Endpoint 1~5 Byte Count0 Register

USB_EP1_CNT_REG (0X9616 RESET=0X00) USB_EP2_CNT_REG (0X961A RESET=0X00) USB_EP3_CNT_REG (0X961E RESET=0X00) USB_EP4_CNT_REG (0X9622 RESET=0X00) USB_EP5_CNT_REG (0X9626 RESET=0X00)			**USB Endpoint 1~5 Byte Count0 Register**
BIT	**NAME**	**R/W**	**DESCRIPTION**
6:0	COUNT0	R/W	Byte Count: This field is the number of valid bytes that have been received for an OUT endpoint or the number of valid bytes to send in the next IN, for an IN endpoint. This value would never be greater than the MaxPktSize for the endpoint. As bytes are received (OUT)/transmitted (IN) from the USB, this counter increments (IN)/decrements (OUT). If the packet was not received successfully, then it is automatically reset to 0 for an OUT endpoint.

Table 11.21 USB Endpoint 1~5 Byte Count1 Register

USB_EP1_CNT1_REG (0X962A RESET=0X00) USB_EP2_CNT1_REG (0X962B RESET=0X00) USB_EP3_CNT1_REG (0X962C RESET=0X00) USB_EP4_CNT1_REG (0X962D RESET=0X00) USB_EP5_CNT1_REG (0X962E RESET=0X00)			**USB Endpoint 1~5 Byte Count1 Register**
BIT	**NAME**	**R/W**	**DESCRIPTION**
7	Reserved	R	Always read as 0
6:0	COUNT1	R/W	Byte Count: used when **BUF1_RDY** bit is set. This field is the number of valid bytes that have been received for an OUT endpoint or the number of valid bytes to send in the next IN, for an IN endpoint. This value would never be greater than the MaxPktSize for the endpoint. As bytes are received (OUT)/transmitted (IN) from the USB, this counter increments (IN)/decrements (OUT). If the packet was not received successfully, then it is automatically reset to 0 for an OUT endpoint.

Table 11.22 USB Endpoint 0~5 Buffer ready Register

USB_EP1_BUFRDY_REG (0X9617 RESET=0X00) USB_EP2_BUFRDY_REG (0X961B RESET=0X00) USB_EP3_BUFRDY_REG (0X961F RESET=0X00) USB_EP4_BUFRDY_REG (0X9623 RESET=0X00) USB_EP5_BUFRDY_REG (0X9627 RESET=0X00)			**USB Endpoint 1~5 Buffer ready Registers**
BIT	**NAME**	**R/W**	**DESCRIPTION**
7:6	PERIPHERAL[1:0]	R/W	These bits indicate which peripheral device IO the endpoints are mapped to. `00` : USB `01` : SPI1 `10` : UART `11` : Reserved
5:2	Reserved	R	Always read as 0
1	BUF1_RDY	R/W	This bit is used only if the **PingPong** bit is enabled for the endpoint. For an IN endpoint (data is transmitted), the firmware sets this bit to indicate buffer 1 is ready. The hardware resets this bit after data is transmitted. The COUNT1 Register indicates the number of bytes (can be maximum size packet or less than that for last packet) received or transmitted.
0	BUF0_RDY	R/W	For an IN endpoint (data is transmitted), this bit is set by the firmware to indicate that data is ready to be sent. The COUNT0 Register indicates the number of bytes (can be maximum size packet or less than that for last packet). After the data is transmitted by the device, the hardware would reset this bit for Buffer 0 ready. If PingPong is enabled, then the firmware sets the **BUF0_RDY** bit for first packet, **BUF1_RDY** for the second packet and so on. The hardware empties the buffers similarly, and resets the ready bits. If data is not available (ready bit is not set), then a NACK would be sent for that endpoint (USB), or an underflow (SPI1 or UART) may occur. For an OUT endpoint (data is received), this bit is set by the hardware to indicate the buffer has data. The COUNT0 Register indicates the number of bytes (can be maximum size packet or less than that for last packet). After the firmware has read the data, it indicates the buffer is available for hardware, by writing a 1 to reset this bit. If the **PingPong** bit is enabled, then hardware fills Buffer 0 and 1 alternatively and sets the **BUF0_RDY**, then **BUF1_RDY** bits accordingly. The firmware resets these bits when data is read. The hardware will not write data to a buffer if its ready bit is set, indicating that the firmware has not read the data. This may cause a NACK to be sent for that endpoint (USB), or an overflow (SPI1 or UART) may occur. If the firmware does a write with both bits (**BUF0_RDY** and **BUF1_RDY**) set, then both hardware internal pointers to buffer and **BUF0_RDY**, **BUF1_RDY** bits are reset, irrespective of the **PingPong** bit setting.

If the **PERIPHERAL[1:0]** bits indicate an endpoint as mapped to USB core, then for an OUT endpoint, setting of the **BUF0_RDY** or **BUF1_RDY** bits would also cause setting the **TXRDY** bit in corresponding EPx_CTL_REG. Similarly, for an IN endpoint mapped to USB core, resetting of **BUF0_RDY** or **BUF1_RDY** would also cause resetting the **RXOUTB0** bit in the corresponding EPx_CTL_REG.

© 2013 Microchip Technology Inc.

The COUNT0 and COUNT1 registers indicate the byte count valid for buffers 0 and 1 when **BUF0_RDY** and **BUF1_RDY** are set, respectively.

Table 11.23 USB Endpoint Interrupt Register

USB_EP_ISR_REG (0X9628 RESET=0X00			**USB Endpoint Interrupt Register**
BIT	**NAME**	**R/W**	**DESCRIPTION**
7:6	Reserved	R	Always reads as 0
5	EP5INT	R/W1	Endpoint 5 Interrupt: This bit is set when an interrupt has been detected on Endpoint 5. The interrupt sources are part of the USB_EP5_CTL_REG Register and can be: **TXCMP**, **RXOUTB0** (**BUF0_RDY**/**BUF1_RDY**), **UNSUCESSFUL**. A USB interrupt is triggered when **USB_EP_ISR_IE_REG.EP5INT_EN** is set. This bit is cleared by hardware when a 1 is written.
4	EP4INT	R/W1	Endpoint 4 Interrupt: This bit is set when an interrupt has been detected on Endpoint 4. The interrupt sources are part of the USB_EP4_CTL_REG Register and can be: **TXCMP**, **RXOUTB0** (**BUF0_RDY**/**BUF1_RDY**), **UNSUCESSFUL**. A USB interrupt is triggered when **USB_EP_ISR_IE_REG.EP4INT_EN** is set. This bit is cleared by hardware when a 1 is written.
3	EP3INT	R/W1	Endpoint 3 Interrupt: This bit is set when an interrupt has been detected on Endpoint 3. The interrupt sources are part of the USB_EP3_CTL_REG Register and can be: **TXCMP**, **RXOUTB0** (**BUF0_RDY**/**BUF1_RDY**), **UNCESSFUL**. A USB interrupt is triggered when **USB_EP_ISR_IE_REG.EP3INT_EN** is set. This bit is cleared by hardware when a 1 is written.
2	EP2INT	R/W1	Endpoint 2 Interrupt: This bit is set when an interrupt has been detected on Endpoint 2. The interrupt sources are part of the USB_EP2_CTL_REG Register and can be: **TXCMP**, **RXOUTB0** (**BUF0_RDY**/**BUF1_RDY**), **UNSUCESSFUL**. A USB interrupt is triggered when **USB_EP_ISR_IE_REG.EP2INT_EN** is set. This bit is cleared by hardware when a 1 is written.
1	EP1INT	R/W1	Endpoint 1 Interrupt: This bit is set when an interrupt has been detected on Endpoint 1. The interrupt sources are part of the USB_EP1_CTL_REG Register and can be: **TXCMP**, **RXOUTB0** (**BUF0_RDY**/**BUF1_RDY**), **UNCESSFUL**. A USB interrupt is triggered when **USB_EP_ISR_IE_REG.EP1INT_EN** is set. This bit is cleared by hardware when a 1 is written.

Table 11.23 USB Endpoint Interrupt Register (continued)

USB_EP_ISR_REG (0X9628 RESET=0X00			USB Endpoint Interrupt Register
BIT	**NAME**	**R/W**	**DESCRIPTION**
0	EP0INT	R/W1	Endpoint 0 Interrupt: This bit is set when an interrupt has been detected on Endpoint 0. The interrupt sources are part of the USB_EP0_CTL_REG Register and can be: **TXCMPL**, **RXOUTB0**, **RXOUTB1**, **RXSETUP**, or **UNSUCCESSFUL**. A USB interrupt is triggered when **USB_EP_ISR_IE_REG.EP0INT_EN** is set. This bit is cleared by hardware when a 1 is written.

Table 11.24 USB Endpoint Interrupt Enable Register

USB_EP_ISR_EN_REG (0X9629 RESET=0X00			USB Endpoint Interrupt Enable Register
BIT	**NAME**	**R/W**	**DESCRIPTION**
7:6	Reserved	R	Always read as 0
5	EP5INT_EN	R/W	Endpoint 5 Interrupt Enable: Set this bit to enable the interrupts for this endpoint. Clear this bit to disable the interrupts for this endpoint.
4	EP4INT_EN	R/W	Endpoint 4 Interrupt Enable: Set this bit to enable the interrupts for this endpoint. Clear this bit to disable the interrupts for this endpoint.
3	EP3INT_EN	R/W	Endpoint 3 Interrupt Enable: Set this bit to enable the interrupts for this endpoint. Clear this bit to disable the interrupts for this endpoint.
2	EP2INT_EN	R/W	Endpoint 2 Interrupt Enable: Set this bit to enable the interrupts for this endpoint. Clear this bit to disable the interrupts for this endpoint.
1	EP1INT_EN	R/W	Endpoint 1 Interrupt Enable: Set this bit to enable the interrupts for this endpoint. Clear this bit to disable the interrupts for this endpoint.
0	EP0INT_EN	R/W	Endpoint 0 Interrupt Enable: Set this bit to enable the interrupts for this endpoint. Clear this bit to disable the interrupts for this endpoint.

© 2013 Microchip Technology Inc.

Chapter 12 GPIO and LED Interface

The registers in this block are on the 8051 XDATA bus. They are defined as an offset.

The SEC1110 and SEC1210 GPIO Interface provides general purpose input monitoring and output control, as well as managing many aspects of pin functionality; including, multi-function pin multiplexing control, output buffer type control, PU/PD resistors, asynchronous wake-up and synchronous interrupt detection, GPIO direction, pad current control, and polarity control.

Features of the GPIO Interface include:

- Inputs:
  Asynchronous rising and falling edge wake-up detection
  Interrupt High or Low Level
  Can disable input (always reads as 0) to disable wake-up detection
- Pull-up or pull-down resistor control
- Interrupt and wake capability available for all GPIOs
- Debounce filter with individual programmable timer (10 µs - 256 ms)

12.1 GPIO Pin Mapping

Each GPIO pad may be operated as a General Purpose Input Output pin (GPIO), or connected through two auxiliary interfaces (A or B) to an internal functional block. An internal functional block must be initialized first before switching its GPIO pins to Auxiliary Mode. In Auxiliary Mode, the output, output enable, input, and input enable of the Auxiliary block are connected to the corresponding pad signals. Additionally, if the pull-up/pull-down enable bit of the **GPIO_PORTx_PUD_EN** is zero, the functional block connected to the Auxiliary port controls the pull-up, and pull-down resistor of the pads.

If an auxiliary block does not have pull-up/pull-down control, then the **GPIO_PORTx_PUD_EN** bit can be set to enable pull-up or pull-down to the pad.

For **GPIO0** (**SC1_IO**) and **GPIO16** (**SC2_IO**) pads, there are additional register bits defined to indicate the strength of pull-up resistor, as 20 kΩ or 11 kΩ.

The GPIO_IN Register is writable. If **GPIO_IN_EN** register bit is disabled, then a pad input may be disabled, and the input value written by software.

The GPIO PORT3 is configured as a read-only port in SEC1110/SEC1210 and SEC1110/SEC1210, but is a read/write port in SEC1300.

Table 12.1 GPIO Pin Mapping

PORT#	GPIO#	SEC1110 AND SEC1210 PACKAGE			COMMENT
		GPIO	AUX A	AUX B	POWER RAIL, DEBOUNCE
PORT0	GPIO0	GPIO0	SC1_IO		SC1_VCC (Note 12.2)
	GPIO1	GPIO1	SC1_CLK		SC1_VCC (Note 12.2)
	GPIO2	GPIO2	SC1_RST_N		SC1_VCC (Note 12.2)
	GPIO3	GPIO3	SC1_C4		SC1_VCC (Note 12.2)
	GPIO4	GPIO4	SC1_C8		SC1_VCC (Note 12.2)
	GPIO5	GPIO5/ TIMER2_T2EX	SC_LED_ACT_N	JTAG_TDO	VDD33 (Note 12.7)
	GPIO6	SC1_PRSNT_N/ GPIO6/ TIMER0_IN		JTAG_TMS	VDD33, DEBOUNCE (Note 12.8)
	GPIO7	GPIO7	Reserved	Reserved	VDD33 (Note 12.10)
PORT1	GPIO8	GPIO8	SPI1_MISO	RXD	VDD33, DEBOUNCE
	GPIO9	GPIO9	SPI1_MOSI	TXD	VDD33, DEBOUNCE
	GPIO10	GPIO10	SPI1_CLK	CTS	VDD33, DEBOUNCE
	GPIO11	GPIO11	SPI1_CE_N	RTS	VDD33, DEBOUNCE
	GPIO12	GPIO12	SPI2_MI	Reserved	VDD33 DEBOUNCE (Note 12.1)
	GPIO13	GPIO13	SPI2_MO	Reserved	VDD33 DEBOUNCE (Note 12.1)
	GPIO14	GPIO14	SPI2_CLK	Reserved	VDD33 DEBOUNCE (Note 12.1)
	GPIO15	GPIO15	SPI2_CE_N	Reserved	VDD33 DEBOUNCE (Note 12.1)

© 2013 Microchip Technology Inc.

Table 12.1 GPIO Pin Mapping

PORT#	GPIO#	SEC1110 AND SEC1210 PACKAGE			COMMENT
		GPIO	AUX A	AUX B	POWER RAIL, DEBOUNCE
PORT2	GPIO16	GPIO16/ TIMER2_CC_IN0	SC2_IO	TIMER2_CC_OUT 0	SC2_VCC DEBOUNCE (Note 12.1, Note 12.3)
	GPIO17	GPIO17/ TIMER2_CC_IN1	SC2_CLK	TIMER2_CC_OUT 1	SC2_VCC DEBOUNCE (Note 12.1, Note 12.3)
	GPIO18	GPIO18/ TIMER2_CC_IN2	SC2_RST_N	TIMER2_CC_OUT 2	SC2_VCC DEBOUNCE (Note 12.1, Note 12.3)
	GPIO19	SC2_PRSNT_N	JTAG_TDI	TIMER1_IN	VDD33, DEBOUNCE (Note 12.1, Note 12.9, Note 12.10)
	GPIO20	GPIO20/TIMER2_ CC_IN3	PCLK_ENABLE	TIMER2_CC_OUT 3	VDD33 DEBOUNCE
	GPIO21	GPIO21	JTAG_CLK	TIMER2_IN	VDD33, DEBOUNCE (Note 12.5)
	GPIO22	GPIO22	TEST/ EXT_OSC_48MHZ	Unassigned	VDD33 (Note 12.6)
	GPIO23	PCLK_IN_48MHZ/ GPIO23	Reserved	Reserved	VDD33 DEBOUNCE
PORT3	GPIO24	BOND0	Reserved	Reserved	VDD33
	GPIO25	BOND1	Reserved	Reserved	VDD33
	GPIO26	BOND2/EXT_SPI2 _EN	Reserved	Reserved	VDD33
	GPIO27	BOND3/GPIO27	Reserved	Reserved	VDD33
	GPIO28	PJTAG_TMS	Reserved	Reserved	VDD33 DEBOUNCE
	GPIO29	PJTAG_TDI	Reserved	Reserved	VDD33 DEBOUNCE
	GPIO30	PJTAG_TDO	Reserved	Reserved	VDD33 DEBOUNCE
	GPIO31	Reserved	Reserved	Reserved	VDD33

The mapping of the GPIO pins to the package pins is shown in Table 12.1, “GPIO Pin Mapping,” on page 146.

Note 12.1 The **SPI2_MI**, **SPI2_MO**, **SPI2_CLK**, **SPI2_CE** pads are not available in the SEC1110 and SEC1210 packages. The SPI2 Master can also be observed using the SC2 pads in the SEC1210 package. The selection of these alternate ports is based on Auxiliary Enable and

Auxiliary Select registers (aux_port2_b_en[3:0]) and if the SPI2 clock is enabled (**SPI2_CLK_EN**). If SPI2 is disabled, the Timer 2 ccbus[2:0] is connected to the **GPIO[18:16]** as outputs. The SPI2 interface is enabled by **BOND2** in the QFN48 debug package.

Note 12.2 The **SC1_CLK**, **SC1_IO**, **SC1_RST_N**, **SC1_C4**, and **SC1_C8** pads are in the SC1_VCC power rail (5V/3.0V/1.8V/0V). The pad's pull-ups and pull-downs are controlled by the Smart Card 1 Block in Auxiliary A Mode.

Note 12.3 The **SC2_CLK**, **SC2_IO**, and **SC2_RST_N** pads are in the **SC2_VCC** power rail (5V/3.0V/1.8V/0V). The pad's pull-ups and pull-downs are controlled by the Smart Card 2 Block in Auxiliary A Mode.

Note 12.4 VDD33 power rail is powered down in STOP power mode.

Note 12.5 The power up state of the **GPIO21** pin when **RESET_N** is released controls the JTAG Mode. The **JTAG_CLK** pad has a weak pull-down at reset time. An external pull-up is applied to enable JTAG at reset time. This pull-down can be disabled if software determines the chip is in Debug Mode. The JTAG Mode is disabled if the **OTP_JTAG_DIS** bit is programmed. The **GPIO21** pad powers up as **JTAG_CLK** in Auxiliary A Mode if JTAG is enabled. If not in JTAG Mode, this pin may be used as **TIMER2_IN**(t2) input or as **GPIO21**.

Note 12.6 The power up state of the **TEST** pin when **RESET_N** is released controls the Test Mode. The **TEST** pad has a weak pull-down. In Functional Mode, the software disables the input enable for this bit and disables the pull-down.

Note 12.7 The **GPIO5/TIMER2_T2EX** input may be used to control the Timer 2 in Reload Mode 1. The **TIMER2_CC_OUT[2:0]** outputs of Timer 2 are output through **GPIO[18:16]** pins in Auxiliary B Mode. These are used to generate a pulse-width modulated waveform. Alternatively, these pads may be used as **TIMER2_CC_IN[2:0]** inputs in Capture Mode.

Note 12.8 The **GPIO6/TIMER0_IN** pin may be used as a t0 input for Timer 0 In Auxiliary A Mode, this pin may be used as **JTAG_TDI** input (if JTAG is enabled), or **SPI2_MI** (If SPI2 is enabled in SEC1210 package). The **GPIO19/TIMER1_IN** pin may be used as an "t1" input for Timer 1. Additionally, the Ref_Clk_Out signal is observed in Auxiliary B Mode for monitoring the frequency of the oscillator clocks.

Note 12.9 The **GPIO19/TIMER1_IN** pin may be used as a t1 input for Timer 1. Additionally, the Ref_Clk_Out signal is observed in Auxiliary B Mode for monitoring the frequency of the oscillator clocks.

Note 12.10 There is no **GPIO7** package pin. The GPIO_PORT0_OUT7 Register, when zero, allows the **GPIO5** pin to function normally. The GPIO_PORT0_DIR[7] Register, when zero, enables normal functionality of the **GPIO6** and **GPIO19** pads. When the GPIO_PORT0_DIR[7] Register is set, it disables the updates to the **GPIO_PORT0_IN[6]** and **GPIO_PORT0_IN[19]** register bits from the pads. This functionality is used when JTAG_CLK_LAT is enabled and functionality of **SC1_PRSNT_N** and **SC2_PRSNT_N** can be emulated by software.

Note 12.11 In the SEC1110/SEC1210 revision, the **BOND3** pad is used as **JTAG_TRSTN** (active low) pins for 8051 JTAG and TEST_JTAG controllers. In SEC1110/SEC1210 version, the **BOND3** is not used as JTAG_TRSTN (not needed). The internal pull-up is enabled for this pin in functional and test modes.

Note 12.12 In QFN48 debug package, the PJTAG_TDI, PJTAG_TMS inputs are used for JTAG. In other packages, these inputs are disabled.

Note 12.13 In other packages, these inputs are disabled.

Note 12.14 Though PJTAG_TDO is connected as GPIO[30] which is part of read-only GPIO3 ports, this pad is an output in QFN48 debug package. It is driven when chip is out of reset. The input enable is controlled by the GPIO registers.

The bond options are shown in Table 12.2, "Bond Options".

 © 2013 Microchip Technology Inc.

Table 12.2 Bond Options

PART	BOND0	BOND1	BOND2	BOND3	DESCRIPTION
SEC1110	0	0	X	H (internal pull-up)	SEC1110 Mode
SEC1210	0	1	X	H (internal pull-up)	SEC1210 Mode
Reserved	1	0	X		Reserved
Debug	1	1	0	1	SEC1110 Debug Package SPI2 port present CPU executes from internal ROM/ OTP ROM CFG_DEBUG=1
Debug	1	1	1	1	SEC1110 Debug Package SPI2 port present CPU executes from external SPI2 ROM EXT_SPI_EN=1 for this case, and EXT_SPI_EN=0 otherwise CFG_DEBUG=1

12.1.1 Procedure for Reading the BOND_OPT Register

To read the BOND bits:

1. Enable the pull-ups on the BOND GPIO pads.
2. Wait (at least) 1 µsec for the pull-ups to take effect.
3. Read the GPIO_PORT3_IN Register.
4. Disable the pull-ups, tristate the BOND pads, and disable input reads.

The **BOND2** input indicates if reset execution is from external SPI2 or internal ROM/OTP_ROM.

12.2 Functional Mode and Test Modes

The chip is in low power STOP Mode, when the **RESET_N** signal is asserted low. All the GPIO pads are powered down in this state. On release of the internal **RESET_N** pin signal, the power to the pads is applied and the state of the **TEST**, **JTAG_CLK**, and **JTAG_TDI** pins are latched. When latched, these values are referred to as the TEST_LAT, JTAG_CLK_LAT, and JTAG_TDI_LAT. The desired state of **TEST**, **JTAG_CLK**, and **JTAG_TDI** must be not changed for 1.4 ms after the release of **RESET_N**. After this time, the **TEST** and **JTAG_CLK** pins may be used as described in Table 12.3, “Functional Mode and Test Modes,” on page 150.

The **TEST** and **JTAG_CLK** pads have a weak pull-down just after the reset state (internal regulators are powered up). In normal functional modes, the **TEST** and **JTAG_CLK** pins are grounded.

If JTAG debugging support is required, then a pull-up may be applied on the **JTAG_CLK** and **TEST** pin is grounded.

The JTAG_TDI_LAT value is used by the boot ROM firmware to decide the MEM_CLK_DIV value at boot time for External Clock Mode.

A power cycle is required to switch the chip mode.

Table 12.3 Functional Mode and Test Modes

RESET_N=0, RESET_N RELEASED (T < 1.4 MS)			T > 1.4 MS AFTER RESET_N RELEASE		
RESET STATE FUNCTION	**TEST**	**JTAG_CLK/GPIO21**	**TEST**	**JTAG_CLK/ GPIO21**	**RESET RELEASED FUNCTION**
STOP Mode when **RESET_N**=0	0	0	X	**GPIO21/ TIMER2_IN**	Functional Mode: Chip Functional Mode with JTAG disabled. TEST_LAT=0, JTAG_CLK_LAT=0
STOP Mode when **RESET_N**=0	0	1	X (0 recommended)	**JTAG_CLK**	Debug1 Mode: Chip Functional Mode with JTAG enabled, provided the **JTAG_DIS** bit is 0 (OTP Register). If the **JTAG_DIS** bit is 1, then the chip functions in Functional Mode. TEST_LAT=0, JTAG_CLK_LAT=1
STOP Mode when **RESET_N**=0	1	1	EXT_OSC_48MHZ	**JTAG_CLK**	Debub2 Mode: Chip Functional Mode with JTAG enabled provided the **JTAG_DIS** bit is 0 (OTP Register). The **TEST** pin is used as an external 48 MHz oscillator input. **OSC48_CTL.EXT_OSC48_PRESENT** is 1 in this Mode. If the **JTAG_DIS** bit is 1, then the chip functions in Functional Mode. TEST_LAT=1, JTAG_CLK_LAT=1
STOP Mode when **RESET_N**=0	1	0	X	X	Test Mode: TEST_LAT=1, JTAG_CLK_LAT=0

© 2013 Microchip Technology Inc.

12.3 GPIO Registers Summary

The register addresses indicated below are XDATA memory addresses. The GPIO ports are configured as 8-bits wide, and there are four GPIO ports numbered 0,1,2,3. There are two memory decode regions for the GPIO registers. The Alternate XDATA address decode enables access as a bit-indexed array.

Table 12.4 GPIO Register Map

PORT#	REGISTER NAME	XDATA ADDRESS	ALTERNATE XDATA ADDRESS	EC TYPE
PORT0	GPIO_AUX_PORT0_EN	0x9C00	0x9D00	R/W
	GPIO_PORT0_DIR	0x9C01	0x9D04	R/W
	GPIO_PORT0_IN	0x9C02	0x9D08	R/W
	GPIO_PORT0_OUT	0x9C03	0x9D0C	R/W
	GPIO_PORT0_PUD_EN	0x9C04	0x9D10	R/W
	GPIO_PORT0_DEBOUNCE_CNT	0x9C05	0x9D14	R/W
	GPIO_AUX_PORT0_SEL	0x9C06	0x9D18	R/W
	GPIO_PORT0_INT_EN	0x9C07	0x9D1C	R/W
	GPIO_PORT0_PUD	0x9C08	0x9D20	R/W
	GPIO_PORT0_OE	0x9C09	0x9D24	R/W
	GPIO_PORT0_INTYPE	0x9C0A	0x9D28	R/W
	GPIO_PORT0_INT_EDGE	0x9C0B	0x9D2C	R/W
	GPIO_PORT0_IN_EN	0x9C0C	0x9D30	R/W
	GPIO_PORT0_INT_STS	0x9C0D	0x9D34	R/W
	GPIO_PORT0_PUS	0x9C0E	0x9D38	R/W
	GPIO_PORT0_DEBOUNCE_EN	0x9C0F	0x9D3C	R/W

Table 12.4 GPIO Register Map (continued)

PORT#	REGISTER NAME	XDATA ADDRESS	ALTERNATE XDATA ADDRESS	EC TYPE
PORT1	GPIO_AUX_PORT1_EN	0x9C10	0x9D01	R/W
	GPIO_PORT1_DIR	0x9C11	0x9D05	R/W
	GPIO_PORT1_IN	0x9C12	0x9D09	R/W
	GPIO_PORT1_OUT	0x9C13	0x9D0D	R/W
	GPIO_PORT1_PUD_EN	0x9C14	0x9D11	R/W
	GPIO_PORT1_DEBOUNCE_CNT	0x9C15	0x9D15	R/W
	GPIO_AUX_PORT1_SEL	0x9C16	0x9D19	R/W
	GPIO_PORT1_INT_EN	0x9C17	0x9D1D	R/W
	GPIO_PORT1_PUD	0x9C18	0x9D21	R/W
	GPIO_PORT1_OE	0x9C19	0x9D25	R/W
	GPIO_PORT1_INTYPE	0x9C1A	0x9D29	R/W
	GPIO_PORT1_INT_EDGE	0x9C1B	0x9D2D	R/W
	GPIO_PORT1_IN_EN	0x9C1C	0x9D31	R/W
	GPIO_PORT1_INT_STS	0x9C1D	0x9D35	R/W
	GPIO_PORT1_PUS	0x9C1E	0x9D39	R/W
	GPIO_PORT1_DEBOUNCE_EN	0x9C1F	0x9D3D	R/W

© 2013 Microchip Technology Inc.

Table 12.4 GPIO Register Map (continued)

PORT#	REGISTER NAME	XDATA ADDRESS	ALTERNATE XDATA ADDRESS	EC TYPE
PORT2	GPIO_AUX_PORT2_EN	0x9C20	0x9D02	R/W
	GPIO_PORT2_DIR	0x9C21	0x9D06	R/W
	GPIO_PORT2_IN	0x9C22	0x9D0A	R/W
	GPIO_PORT2_OUT	0x9C23	0x9D0E	R/W
	GPIO_PORT2_PUD_EN	0x9C24	0x9D12	R/W
	GPIO_PORT2_DEBOUNCE_CNT	0x9C25	0x9D16	R/W
	GPIO_AUX_PORT2_SEL	0x9C26	0x9D1A	R/W
	GPIO_PORT2_INT_EN	0x9C27	0x9D1E	R/W
	GPIO_PORT2_PUD	0x9C28	0x9D22	R/W
	GPIO_PORT2_OE	0x9C29	0x9D26	R/W
	GPIO_PORT2_INTYPE	0x9C2A	0x9D2A	R/W
	GPIO_PORT2_INT_EDGE	0x9C2B	0x9D2E	R/W
	GPIO_PORT2_IN_EN	0x9C2C	0x9D32	R/W
	GPIO_PORT2_INT_STS	0x9C2D	0x9D36	R/W
	GPIO_PORT2_PUS	0x9C2E	0x9D3A	R/W
	GPIO_PORT2_DEBOUNCE_EN	0x9C2F	0x9D3E	R/W

Table 12.4 GPIO Register Map (continued)

PORT#	REGISTER NAME	XDATA ADDRESS	ALTERNATE XDATA ADDRESS	EC TYPE
PORT3	GPIO_AUX_PORT3_EN	0x9C30	0x9D03	R/W
	GPIO_PORT3_DIR	0x9C31	0x9D07	R/W
	GPIO_PORT3_IN	0x9C32	0x9D0B	R/W
	GPIO_PORT3_OUT	0x9C33	0x9D0F	R/W
	GPIO_PORT3_PUD_EN	0x9C34	0x9D13	R/W
	GPIO_PORT3_DEBOUNCE_CNT	0x9C35	0x9D17	R/W
	GPIO_AUX_PORT3_SEL	0x9C36	0x9D1B	R/W
	GPIO_PORT3_INT_EN	0x9C37	0x9D1F	R/W
	GPIO_PORT3_PUD	0x9C38	0x9D23	R/W
	GPIO_PORT3_OE	0x9C39	0x9D27	R/W
	GPIO_PORT3_INTYPE	0x9C3A	0x9D2B	R/W
	GPIO_PORT3_INT_EDGE	0x9C3B	0x9D2F	R/W
	GPIO_PORT3_IN_EN	0x9C3C	0x9D33	R/W
	GPIO_PORT3_INT_STS	0x9C3D	0x9D37	R/W
	GPIO_PORT3_PUS	0x9C3E	0x9D3B	R/W
	GPIO_PORT3_DEBOUNCE_EN	0x9C3F	0x9D3F	R/W

12.4 GPIO Registers

In the SEC1110/SEC1210 version, the GPIO block uses the CPU clock. Therefore, if the CPU is in CPU_STOP mode, the GPIO_PORT*x*_IN registers do not reflect the value of the pins. This is due to the absence of the CPU clock in CPU_STOP mode when debounce clock is enabled. In SEC1110/SEC1210 version, the CPU peripheral clock is connected to GPIO block and hence can wakeup the processor.

The GPIO_PORT3 registers are read only, with controls for pull-up and pull-down. They are used for reading the bond options.

© 2013 Microchip Technology Inc.

Table 12.5 GPIO Auxiliary Port 0,1,2,3 Enable Register

GPIO_AUX_PORT0_EN (0X9C00~0X9C00 - RESET= Table 12.21 on page 163**) GPIO_AUX_PORT1_EN (0X9C10~0X9C10 - RESET=** Table 12.21 on page 163 **GPIO_AUX_PORT2_EN (0X9C20~0X9C20 - RESET=** Table 12.21 on page 163**) GPIO_AUX_PORT3_EN (0X9C30~0X9C30 - RESET=** Table 12.21 on page 163**)**			**GPIO AUXILIARY PORT 0,1,2,3 ENABLE REGISTER**
BIT	**NAME**	**R/W**	**DESCRIPTION**
7:0	GPIO_AUX_PORT_EN[7:0]	R/W	GPIO Auxiliary Port Enable: `0` : Pads controlled by GPIO registers `1` : Pads controlled by Auxiliary Ports A or B. The GPIO_AUX_PORT3_EN Register is read only, and is always `0`.

Table 12.6 GPIO Port 0,1,2,3 Direction Register

GPIO_PORT0_DIR (0X9C01~0X9C01- RESET=0X00) GPIO_PORT1_DIR (0X9C11~0X9C11- RESET=0X00) GPIO_PORT2_DIR (0X9C21~0X9C21- RESET=0X00) GPIO_PORT3_DIR (0X9C31~0X9C31- RESET=0X00)			**GPIO PORT 0,1,2,3 DIRECTION REGISTER**
BIT	**NAME**	**R/W**	**DESCRIPTION**
7:0	GPIO_PORT_DIR[7:0]	R/W	GPIO Direction: Controlls the output enable of the pad, when the **GPIO_AUX_PORT_EN** bit is 0. `0` : In, the input state is controlled by the GPIO_IN_EN bits `1` : Out The GPIO_PORT3_DIR register is read only, and is always 0.

Table 12.7 GPIO Port 0,1,2,3 In Register

GPIO_PORT0_IN (0X9C02~9C02- RESET=0X00) GPIO_PORT1_IN (0X9C12~9C12- RESET=0X00) GPIO_PORT2_IN (0X9C22~9C22- RESET=0X00) GPIO_PORT3_IN (0X9C32~9C32- RESET=0X00)			**GPIO PORT 0,1,2,3 IN REGISTER**
BIT	**NAME**	**R/W**	**DESCRIPTION**
7:0	GPIO_IN[7:0]	R/W	GPIO Pad Input Buffer Data

Table 12.8 GPIO Port 0,1,2,3 Output Register

GPIO_PORT0_OUT (0X9C03~0X9C03- RESET=0X00) GPIO_PORT1_OUT (0X9C13~0X9C13- RESET=0X00) GPIO_PORT2_OUT (0X9C23~0X9C23- RESET=0X00) GPIO_PORT3_OUT (0X9C33~0X9C33- RESET=0X00)			**GPIO PORT 0,1,2,3 OUT REGISTER**
BIT	**NAME**	**R/W**	**DESCRIPTION**
7:0	GPIO_OUT	**R/W**	GPIO Pad Output Buffer Data when **GPIO_PORT0_OE.GPIO_OE** is enabled. If the pad is configured as an input, then this register bit acts as a GPIO interrupt polarity register. `0` : GPIO input changes to 0 (level) or falling edge generates an interrupt. `1` : GPIO input changes to 1(level) or rising edge generates an interrupt. The GPIO_PORT3_OUT Register is read only, and is always 0.

Table 12.9 GPIO Port 0,1,2 Pull Up/down Enable Register

GPIO_PORT0_PUD_EN (0X9C04~0X9C04- RESET=Table 12.21 on page 163**) GPIO_PORT1_PUD_EN (0X9C14~0X9C14- RESET=**Table 12.21 on page 163**) GPIO_PORT2_PUD_EN (0X9C24~0X9C24- RESET=**Table 12.21 on page 163**) GPIO_PORT2_PUD_EN (0X9C34~0X9C34- RESET=**Table 12.21 on page 163**)**			**GPIO PORT 0,1,2,3 PULL UP/DOWN ENABLE REGISTER**
BIT	**NAME**	**R/W**	**DESCRIPTION**
7:0	GPIO_PUD_EN[7:0]	R/W	`0` : Disables the pull-up/down resistor on the GPIO pad. `1` : Enables the pull-up/down resistor on the GPIO pad.

The pull-up/down resistor control to the Auxiliary ports are enabled for a GPIO bit only if the corresponding bit in the GPIO_PORTx_PUD_EN Register is zero.

An internal peripheral using Auxiliary ports can ensure that the pin is pulled-up or pulled-low, when it is not driven, by enabling the corresponding bit in these registers.

© 2013 Microchip Technology Inc.

Table 12.10 GPIO Port 0,1,2,3 Debounce Count Register

GPIO_PORT0_DEBOUNCE_CNT (0X9C05~0X09C05- RESET=0X00) GPIO_PORT0_DEBOUNCE_CNT (0X9C15~0X09C15- RESET=0X00) GPIO_PORT0_DEBOUNCE_CNT (0X9C25~0X09C25- RESET=0X00) GPIO_PORT3_DEBOUNCE_CNT (0X9C35~0X09C35- RESET=0X00)			**GPIO PORT 0,1,2,3 DEBOUNCE COUNT REGISTER**
BIT	**NAME**	**R/W**	**DESCRIPTION**
7:0	GPIO_DEBOUNCE_CNT[7:0]	R/W	This field indicates the number of debounce clocks (1 ms or 0.01 ms) to wait after any change in a GPIO pad, to ensure the pad has not changed its value. The count restarts after every change of GPIO pad, when enabled. The GPIO_PORT3_DEBOUNCE_CNT Register is read only, and is always 0. A register value of 0, behaves as value 1.

The SEC1110 and SEC1210 GPIO_PORT3 does not have a debounce count register.

Table 12.11 GPIO Auxiliary Port 0,1,2,3 Select A/B Register

GPIO_AUX_PORT0_SEL (0X9C06~0X9C06 - RESET= Table 12.21 on page 163**) GPIO_AUX_PORT1_SEL (0X9C16~0X9C16 - RESET=** Table 12.21 on page 163**) GPIO_AUX_PORT2_SEL (0X9C26~0X9C26 - RESET=** Table 12.21 on page 163**) GPIO_AUX_PORT3_SEL (0X9C36~0X9C36 - RESET=** Table 12.21 on page 163**)**			**GPIO AUXILIARY PORT 0,1,2,3 A/B SELECT REGISTER**
BIT	**NAME**	**R/W**	**DESCRIPTION**
7:0	GPIO_AUX_PORT_SEL[7:0]	**R/W**	GPIO Auxiliary Port A/B Select. `0` : Pads controlled by Auxiliary Port A `1` : Pads controlled by Auxiliary Port B. The GPIO_AUX_PORT3_SEL Register is read only, and is always 0.

Table 12.12 GPIO Port 0,1,2,3 Interrupt Enable Register

GPIO_PORT0_INT_EN (0X9C07~0X9C07 - RESET=0X00) GPIO_PORT1_INT_EN (0X9C17~0X9C17 - RESET=0X00 GPIO_PORT2_INT_EN (0X9C27~0X9C27 - RESET=0X00) GPIO_PORT3_INT_EN (0X9C37~0X9C37 - RESET=0X00)			**GPIO PORT 0,1,2,3 INTERRUPT ENABLE REGISTER**
BIT	**NAME**	**R/W**	**DESCRIPTION**
7:0	GPIO_PORT_INT_EN[7:0]	**R/W**	GPIO Interrupt Enable Register The corresponding **GPIO_PORT_IN_EN** bit must be enabled for the pad inputs to be seen. `0` : Interrupts from this GPIO pad is disabled `1` : Interrupts from this GPIO pad is enabled The GPIO_PORT3_INT_EN Register is read only, and is always 0.

Table 12.13 GPIO Port 0,1,2,3 Pull Up/Down Select Register

GPIO_PORT0_PUD (0X9C08~0X09C08- RESET=Table 12.21 on page 163**) GPIO_PORT1_PUD (0X9C18~0X09C18- RESET=**Table 12.21 on page 163**) GPIO_PORT2_PUD (0X9C28~0X09C28- RESET=**Table 12.21 on page 163**) GPIO_PORT3_PUD (0X9C38~0X09C38- RESET=**Table 12.21 on page 163**)**			**GPIO PORT 0,1,2,3 PULL UP/DOWN SELECT REGISTER**
BIT	**NAME**	**R/W**	**DESCRIPTION**
7:0	GPIO_PUD[7:0]	R/W	`0` : Selects pull-down resistor on the GPIO pad. `1` : Selects pull-up resistor on the GPIO pad. The corresponding **GPIO_PUD_EN** bit must be enabled for pull-up or pull-down resistor to be active. **Note:** Both the pull-up and pull-down resistors to the pads are never active at the same time.

For GPIO PORT4, in auxiliary A mode (keyboard mode), the input enable, pull-up/pull-down enable values of the pad are controlled by the GPIO register values, since the keyboard block does not control these values. Hence, before enabling auxiliary port 4, the appropriate values have to be programmed for the above mentioned registers based on the keyboard configuration.

© 2013 Microchip Technology Inc.

Table 12.14 GPIO Port 0,1,2,3 Output Enable Register

GPIO_PORT0_OE (0X9C09~0X09C09- RESET=0X00) GPIO_PORT1_OE (0X9C19~0X09C19- RESET=0X00) GPIO_PORT2_OE (0X9C29~0X09C29- RESET=0X00) GPIO_PORT3_OE (0X9C39~0X09C39- RESET=0X00)			**GPIO PORT 0,1,2,3 OUTPUT ENABLE REGISTER**
BIT	**NAME**	**R/W**	**DESCRIPTION**
7:0	GPIO_OE[7:0]	R/W	The GPIO Output Enable to pad, when **GPIO_AUX_PORTx_EN** bit is 0. `0` : GPIO pad is tri-stated `1` : GPIO pad is driven The GPIO_PORT3_OE Register is read only, and is always 0.

Table 12.15 GPIO Port 0,1,2,3 Input Type Register

GPIO_PORT0_INTYPE (0X9C0A~0X09C0A- RESET=0X00) GPIO_PORT1_INTYPE (0X9C1A~0X09C1A- RESET=0X00) GPIO_PORT2_INTYPE (0X9C2A~0X09C2A- RESET=0X00) GPIO_PORT3_INTYPE (0X9C3A~0X09C3A- RESET=0X00)			**GPIO PORT 0,1,2,3 INPUT TYPE REGISTER**
BIT	**NAME**	**R/W**	**DESCRIPTION**
7:0	GPIO_INTYPE[7:0]	R/W	GPIO Input Capture Type: `0` : GPIO pad input is double synced on system clock. `1` : GPIO pad is registered on the system clock. If debounce is enabled then register data after debounce time. Else, register state change after double syncing. The GPIO_PORT3_INTYPE Register is read only, and is always 0.

Table 12.16 GPIO Port 0,1,2,3 Interrupt Edge Enable Register

GPIO_PORT0_INT_EDGE (0X9C0B~0X09C0B- RESET=0X00) GPIO_PORT1_INT_EDGE (0X9C1B~0X09C1B- RESET=0X00) GPIO_PORT2_INT_EDGE (0X9C2B~0X09C2B- RESET=0X00) GPIO_PORT3_INT_EDGE (0X9C3B~0X09C3B- RESET=0X00)			**GPIO PORT 0,1,2,3 INTERRUPT EDGE REGISTER**
BIT	**NAME**	**R/W**	**DESCRIPTION**
7:0	GPIO_INT_EDGE[7:0]	R/W	GPIO Interrupt: it is either edge or level triggered. `0` : GPIO pad input is level triggered `1` : GPIO pad input is edge triggered The GPIO_PORT3_INT_EDGE Register is read only, and is always 0.

Table 12.17 GPIO Port 0,1,2,3 Input Enable Register

GPIO_PORT0_IN_EN (0X9C0C~0X9C0C - RESET= Table 12.21 on page 163**) GPIO_PORT1_IN_EN (0X9C1C~0X9C1C - RESET=** Table 12.21 on page 163**) GPIO_PORT2_IN_EN (0X9C2C~0X9C2C - RESET=** Table 12.21 on page 163**) GPIO_PORT3_IN_EN (0X9C3C~0X9C3C - RESET=** Table 12.21 on page 163**)**			**GPIO PORT 0,1,2,3 INPUT ENABLE REGISTER**
BIT	**NAME**	**R/W**	**DESCRIPTION**
7:0	GPIO_IN_EN[7:0]	R/W	GPIO Input Enable register enables the pad input. If this bit is disabled, then the input value seen is default 0. `0` : Inputs from this GPIO pad are disabled `1` : Inputs from this GPIO pad are enabled

© 2013 Microchip Technology Inc.

Table 12.18 GPIO Port 0,1,2,3 Interrupt Status Register

GPIO_PORT0_INT_STS (0X9C0D~0X09C0D- RESET=0X00) GPIO_PORT1_INT_STS (0X9C1D~0X09C1D- RESET=0X00) GPIO_PORT2_INT_STS (0X9C2D~0X09C2D- RESET=0X00) GPIO_PORT3_INT_STS (0X9C3D~0X09C3D- RESET=0X00)			GPIO INTERRUPT STATUS REGISTER
BIT	**NAME**	**R/W**	**DESCRIPTION**
7:0	GPIO_INT_STS[7:0]	R/W1	GPIO Interrupt Polarity Register: `0` : If a bit is reset, then no interrupt event occurred for this GPIO pad input. `1` : If a bit is set, then an interrupt event occurred for this GPIO pad input. Write 1 to clear this interrupt bit. The GPIO_PORT3_INT_STS Register is read only, and is always 0.

Writing a `1` to a bit clears the bit and enables the detection of the next level transition. If enabled in the GPIO_PORTx_INT_EN Register, a 1 in corresponding bit in this register will force a 1 on the 8051 core's external INT1 interrupt input.

Table 12.19 GPIO Port 0,1,2,3 Pull Up Strength Register

GPIO_PORT0_PUS (0X9C0E~0X9C0E- RESET=0X00) GPIO_PORT1_PUS (0X9C1E~0X9C1E- RESET=0X00) GPIO_PORT2_PUS (0X9C2E~0X9C2E- RESET=0X00) GPIO_PORT3_PUS (0X9C3E~0X9C3E- RESET=0X00)			GPIO PORT 0,1,2,3 PULL UP/DOWN ENABLE REGISTER
BIT	**NAME**	**R/W**	**DESCRIPTION**
7:1	Reserved	R	Always read as 0
0	GPIO_PUS0	R/W	`0` : Weak pull-up resistor on the GPIO pad `1` : Strong pull-up resistor on the GPIO pad

The GPIO pull-up resistor strength is programmable only for the **SC1_IO** (**GPIO0**) and **SC2_IO** (**GPIO16**) pads. An internal weak pull-up of 20 kΩ or 11 kΩ may be used. The register bits for other GPIOs are read only as 0.

Table 12.20 GPIO Port 0,1,2,3 Debounce Enable Register

GPIO_PORT0_DEBOUNCE_EN (0X9C0F~0X09CFD- RESET=0X00) GPIO_PORT1_DEBOUNCE_EN (0X9C1F~0X09C1F- RESET=0X00) GPIO_PORT2_DEBOUNCE_EN (0X9C2F~0X09C2F- RESET=0X00) GPIO_PORT3_DEBOUNCE_EN (0X9C3F~0X09C3F- RESET=0X00)			GPIO DEBOUNCE ENABLE REGISTER
BIT	**NAME**	**R/W**	**DESCRIPTION**
7:0	GPIO_DEBOUNCE_EN[7:0]	R/W1	GPIO Input Data Debounce Enable: `0` : Debouncing on this input is disabled `1` : Debouncing is enabled on this input The GPIO_PORT3_DEBOUNCE_EN Register is read only, and is always 0.

The debounce register bit must be disabled if operating in Auxiliary Port Mode, and debouncing is not required. Therefore, an internal peripheral is required to directly control the GPIO pad. The debounce clock is gated off when oscillator is in Sleep Mode.

The Debounce Register is valid only for the following pads:

- GPIO6/SC1_PRSNT_N
- GPIO19/SC2_PRSNT_N
- GPIO21/JTAG_CLK
- GPIO8/RXD
- GPIO9/TXD
- GPIO10/CTS
- GPIO11/RTS

Note: The other bits are read only as zero.

© 2013 Microchip Technology Inc.

Table 12.21 Power on Reset State of GPIO Registers

GPIO#	RESET STATE OF REGISTERS					COMMENT
	GPIO_AUX_PORT_EN	GPIO_AUX_PORT_SEL	GPIO_PORT_IN_EN	GPIO_PUD_EN	GPIO_PUD	
GPIO0	0	0	0	0	0	I/O disabled.
GPIO1	0	0	0	0	0	I/O disabled.
GPIO2	0	0	0	0	0	I/O disabled.
GPIO3	0	0	0	0	0	I/O disabled.
GPIO4	0	0	0	0	0	I/O disabled.
GPIO5	!CFG_DEBUG & JTAG_CLK_LAT	1	0	!CFG_DEBUG & JTAG_CLK_LAT	1	JTAG_TDO
GPIO6	!CFG_DEBUG & JTAG_CLK_LAT	1	!CFG_DEBUG & JTAG_CLK_LAT	!CFG_DEBUG & JTAG_CLK_LAT	1	JTAG_TMS
GPIO7	0	0	0	0	0	Reserved
GPIO8	0	0	0	0	0	I/O disabled.
GPIO9	0	0	0	0	0	I/O disabled.
GPIO10	0	0	0	0	0	I/O disabled.
GPIO11	0	0	0	0	0	I/O disabled.
GPIO12	EXT_SPI_EN	0	0	0	0	SPI2_MI
GPIO13	EXT_SPI_EN	0	0	0	0	SPI2_MO
GPIO14	EXT_SPI_EN	0	0	0	0	SPI2_CLK
GPIO15	EXT_SPI_EN	0		EXT_SPI_EN	1	SPI2_CE
GPIO16	0	0	0	0	0	I/O disabled.
GPIO17	0	0	0	0	0	I/O disabled.
GPIO18	0	0	0	0	0	I/O disabled.
GPIO19	!CFG_DEBUG & JTAG_CLK_LAT	0	!CFG_DEBUG & JTAG_CLK_LAT	!CFG_DEBUG & JTAG_CLK_LAT	1	JTAG_TDI

Table 12.21 Power on Reset State of GPIO Registers (continued)

GPIO#	RESET STATE OF REGISTERS					COMMENT
	GPIO_AUX_PORT_EN	GPIO_AUX_PORT_SEL	GPIO_PORT_IN_EN	GPIO_PUD_EN	GPIO_PUD	
GPIO20	1	0	1: A1 version CFG_DEBUG : later versions	1	0	CLK_ENABLE
GPIO21	JTAG_CLK_LAT	0	1	1	0	JTAG_CLK
GPIO22	1	0	1	1	0	TEST/ EXT_OSC_48 MHZ
GPIO23	0	0	1: A1 version CFG_DEBUG : later versions	1	0	PCLK_IN_48 MHZ
GPIO24	0	0	1	1	1	BOND0
GPIO25	0	0	1	1	1	BOND1
GPIO26	0	0	1	1	1	BOND2
GPIO27	0	0	1	1	1	BOND3/JTAG_TRSTN
GPIO28	0	0	1: A1 version CFG_DEBUG & JTAG_CLK_LAT : later versions	CFG_DEBUG	1	PJTAG_TMS
GPIO29	0	0	1: A1 version CFG_DEBUG & JTAG_CLK_LAT : later versions	CFG_DEBUG	1	PJTAG_TDI
GPIO30	0	0	0: A1 version CFG_DEBUG & JTAG_CLK_LAT : later versions	CFG_DEBUG	1	PJTAG_TDO
GPIO31	0	0	0	0	0	Reserved

12.4.1 GPIO Wake-Up Event

The GPIO can be programmed as input with interrupt enabled, and a change in the pads can be detected to wake up the CPU from SLEEP/IDLE states or wake up the oscillator. Refer to Table 16.14, “Wake on Event Register,” on page 207.

© 2013 Microchip Technology Inc.

Chapter 13 Two Pin Serial Port (UART)

The SEC1110 and SEC1210 incorporates full function UARTs. The UART is software compatible with the 16C450 and 16C550A. The UART performs serial-to-parallel conversion on received characters and parallel-to-serial conversion on transmit characters. The character options are programmable for 1 start; 1, 1.5 or 2 stop bits; even, odd, sticky or no parity; and prioritized interrupts. The UART contains a programmable baud rate generator that is capable of dividing the input clock or crystal by a number from 1 to 65535. The UART is accessible on the EC_SPB.

- Programmable word length (5 to 8), stop bits (1, 1.5, 2) and parity (even, odd, sticky or no parity)
- Programmable baud rate generator
- Interrupt generator
- Loop-Back Mode
- Interface registers
- 16-byte Transmit FIFO
- 16-byte Receive FIFO
- Multiple clock sources
- Pin polarity control
- Low Power Sleep Mode

13.1 Transmit Operation

The SEC1110 and SEC1210 do not support external connections for the MODEM control inputs (nDSR, nRI and nDCD) or for the MODEM control outputs (nDTR, OUT1 and OUT2).

Transmission is initiated by writing the data to be sent to the TX Holding Register or to the TX FIFO (if enabled). The data is then transferred to the TX Shift Register together with a start bit and parity and stop bits as determined by settings in the Line Control Register. The bits to be transmitted are then shifted out of the TX Shift Register in the order start bit, data bits (LSB first), parity bit, and stop bit, using the output from the Baud Rate Generator (divided by 16) as the clock.

If enabled, a TX Holding Register Empty Interrupt will be generated when the TX Holding Register or the TX FIFO (if enabled) becomes empty.

When FIFOs are enabled (i.e., bit 0 of the FIFO Control Register is set), the M16550S can store up to 16 bytes of data for transmission at a time. Transmission will continue until the TX FIFO is empty. The FIFO's readiness to accept more data is indicated by an interrupt.

13.2 Receive Operation

Data is sampled into the RX Shift Register using the Receive clock, divided by 16. The Receive clock is provided by the Baud Rate Generator. A filter is used to remove spurious inputs that last for less than two periods of the Receive clock. When the complete word has been clocked into the Receiver, the data bits are transferred to the RX Buffer Register or to the RX FIFO (if enabled) to be read by the CPU. (The first bit of the data to be received is placed in bit 0 of this register.) The Receiver also checks that the parity bit and stop bits are as specified by the Line Control Register.

If enabled, an RX Data Received Interrupt will be generated when the data has been transferred to the RX Buffer Register or, if FIFOs are enabled, when the RX Trigger Level has been reached. Interrupts can also be generated to signal a RX FIFO character timeout, incorrect parity, a missing stop bit (frame error) or other line status errors.

When FIFOs are enabled (i.e., bit 0 of the FIFO Control Register is set), the M16550S can store up to 16 bytes of received data at a time. Depending on the selected RX Trigger Level, the interrupt will go active to indicate that data is available when the RX FIFO contains 1, 4, 8 or 14 bytes of data.

© 2013 Microchip Technology Inc.

13.3 Power, Clocks and Reset

13.3.1 Power

This block is only active if **UART_CLK_DIV.UART_CLK_EN** is set to 1, otherwise this block is disabled and the clocks are shut off.

13.3.2 Clocks

The UART_CLK is sourced from the 48 MHz oscillator clock divided by UART_CLK_DIV as explained in 16.4.8 "UART Clock Register" on page 203.

13.3.3 Reset

Table 13.1 details the effect of a RESET event on each of the runtime registers of the Serial Port.

Table 13.1 Reset Function Table

REGISTER/SIGNAL	RESET CONTROL	RESET STATE
Interrupt Enable Register	RESET	All bits low
Interrupt Identification Reg.		Bit 0 is high; bits 1 - 7 low
FIFO Control		All bits low
Line Control Reg.		
MODEM Control Reg.		
Line Status Reg.		All bits low except bits 5 and 6 are high
MODEM Status Reg.		Bits 0 - 3 low; bits 4 - 7 input
TXD1, TXD2		High
INTRPT (RCVR errs)	RESET/Read LSR	Low
INTRPT (RCVR Data Ready)	RESET/Read RBR	
INTRPT (THRE)	RESET/Read IIR/Write THR	
OUT2B	RESET	High
RTSB		
DTRB		
OUT1B		
RCVR FIFO	RESET/ FCR1*FCR0/_FCR0	All bits low
XMIT FIFO	RESET/ FCR1*FCR0/_FCR0	

13.4 Interrupts

The Runtime registers are reset on a RESET event. Refer to Section 16.1, "Reset," on page 196 definitions of RESET event.

The two-pin Serial Port (UART) can generate an interrupt event. The interrupt source (INTR) is a level, active high signal.

© 2013 Microchip Technology Inc.

13.5 Registers

Table 13.3 is a register summary for one instance of the two-pin Serial Port (UART). Each EC address is indicated as an offset address from the XDATA base address 0x9500. Table 13.2 summarizes the registers allocated for the controller.

Table 13.2 Two Pin Serial Port (UART) Register Summary

REGISTER NAME	DLAB (Note 13.1)	XDATAOFFSET ADDRESS	EC TYPE
Receive Buffer Register (RB)	0	0x00	R
Transmit Buffer Register (TB)	0	0x00	W
Programmable Baud Rate Generator (and Divisor)	1	0x00	R/W
Programmable Baud Rate Generator (and Divisor)	1	0x01	R/W
Interrupt Enable Register (IER)	0	0x01	R/W
FIFO Control Register (FCR),	X	0x02	W
Interrupt Identification Register (IIR)	X	0x02	R
Line Control Register (LCR)	X	0x03	R/W
Modem Control Register (MCR)	X	0x04	R/W
Line Status Register (LSR)	X	0x05	R
Modem Status Register (MSR)	X	0x06	R
Scratchpad Register (SCR)	X	0x07	R/W
UART_Configuration Select Register	X	0x30	R/W
UART_Configuration Active Register	X	0x31	R/W

Note 13.1 **DLAB** is bit 7 of the Line Control Register

13.6 Register Summary

Table 13.3 Register Summary

ADDRESS (Note 13.2)	R/W	REGISTER NAME	BIT 7	BIT 6	BIT 5	BIT 4	BIT 3	BIT 2	BIT 1	BIT 0
ADDR = 0 DLAB = 0	R	Receive Buffer r	Data Bit 7	Data Bit 6	Data Bit 5	Data Bit 4	Data Bit 3	Data Bit 2	Data Bit 1	Data Bit 0 (Note 13.3)
ADDR = 0 DLAB = 0	W	Transmitter Holding r	Data Bit 7	Data Bit 6	Data Bit 5	Data Bit 4	Data Bit 3	Data Bit 2	Data Bit 1	Data Bit 0

Table 13.3 Register Summary

ADDRESS (Note 13.2)	R/W	REGISTER NAME	BIT 7	BIT 6	BIT 5	BIT 4	BIT 3	BIT 2	BIT 1	BIT 0
ADDR = 1 DLAB = 0	R/W	Interrupt Enable r	Reserved				Enable Modem Status Interrupt (EMSI)	Enable Receiver Line Sta-tus Inter-rupt (ELSI)	Enable Trans-mitter Holding Register Empty Interrupt (ETH-REI)	Enable Receive d Data Avail-able Interrupt (ERDAI)
ADDR = 2	R	Interrupt Ident. r	FIFOs Enabled (Note 13. 7)	FIFOs Enabled (Note 13. 7)	Reserved		Interrupt ID Bit (Note 13. 7)	Interrupt ID Bit	Interrupt ID Bit	"0" if interrupt pending
ADDR = 2	W	FIFO Control r	RCVR Trigger MSB	RCVR Trigger LSB	Reserved		DMA Mode Select (Note 13. 8)	XMIT FIFO Reset	RCVR FIFO Reset	FIFO Enable
ADDR = 3	R/W	Line Control r	Divisor Latch Access Bit (DLAB)	Set Break	Stick Parity	Even Parity Select (EPS)	Parity Enable (PEN)	Number of Stop Bits (STB)	Word Length Select Bit 1 (WLS1)	Word Length Select Bit 0 (WLS0)
ADDR = 4	R/W	MODEM Control r	Reserved			Loop	OUT2 (Note 13. 5)	OUT1 (Note 13. 5)	Request to Send (RTS)	Data Ter-minal Ready (DTR)
ADDR = 5	R/W	Line Status r	Error in RCVR FIFO (Note 13. 7)	Trans-mitter Empty (TEMT) (Note 13. 4)	Trans-mitter Holding Regis-ter (THRE)	Break Interrupt (BI)	Framing Error (FE)	Parity Error (PE)	Overrun Error (OE)	Data Ready (DR)
ADDR = 6	R/W	MODEM Status r	Data Carrier Detect (DCD)	Ring Indica-tor (RI)	Data Set Ready (DSR)	Clear to Send (CTS)	Delta Data Carrier Detect (DDCD)	Trailing Edge Ring Indicator (TERI)	Delta Data Set Ready (DDSR)	Delta Clear to Send (DCTS)
ADDR = 7	R/W	Scratch r (Note 13.6)	Bit7	Bit6	Bit5	Bit4	Bit3	Bit2	Bit1	Bit0
ADDR = 0 DLAB = 1	R/W	Divisor Latch (LS)	Bit7	Bit6	Bit5	Bit4	Bit3	Bit2	Bit1	Bit0
ADDR = 1 DLAB = 1	R/W	Divisor Latch (MS)	Bit15	Bit14	Bit13	Bit12	Bit11	Bit10	Bit9	Bit8

Note 13.2 **DLAB** is bit 7 of the Line Control Register (ADDR = 3).

Note 13.3 Bit 0 is the least significant bit, and is the first bit serially transmitted or received.

Note 13.4 When operating in the XT Mode, this bit will be set any time that the Transmitter Shift Register is empty.

Note 13.5 This bit no longer has a pin associated with it.

Note 13.6 When operating in the XT Mode, this register is not available.

Note 13.7 These bits are always zero in the Non-FIFO Mode.

Note 13.8 Writing a one to this bit has effect. DMA modes are supported in this chip.

© 2013 Microchip Technology Inc.

13.7 Detailed Description of Accessible Runtime Registers

13.7.1 Receive Buffer Register (RB)

UART_RX_DATA (DLAB=0) (OFFSET 0X00 RESET=0X00)			UART RECEIVED DATA
BIT	**NAME**	**R/W**	**DESCRIPTION**
7:0	DATA	R	This register holds the received incoming data byte. Bit 0 is the least significant bit, which is transmitted and received first. Received data is double buffered; this uses an additional shift register to receive the serial data stream and convert it to a parallel 8-bit word which is transferred to the Receive Buffer Register. The shift register is not accessible. If enabled via IER0, an RX Buffer Register Interrupt is generated when the buffer contains data to read. If the FIFOs are disabled, this register is undefined after reset. If the FIFOs are enabled, this register will return zero after a reset, if the RX FIFO is empty.

13.7.2 Transmit Buffer Register (TB)

UART_TX_DATA (DLAB=0) (OFFSET 0X00 RESET=0X00)			UART TRANSMIT DATA
BIT	**NAME**	**R/W**	**DESCRIPTION**
7:0	TX_DATA	W	This register contains the data byte to be transmitted. The transmit buffer/TX Holding Register is double buffered, utilizing an additional shift register (not accessible) to convert the 8-bit data word to a serial format. This shift register is loaded from the Transmit Buffer when the transmission of the previous byte is complete, and transmission is bit 0 first.

13.7.3 Interrupt Enable Register (IER)

The lower four bits of this register control the enables of the five interrupt sources of the Serial Port Interrupt. It is possible to totally disable the interrupt system by resetting bits 0 through 3 of this register. Similarly, setting the appropriate bits of this register to a high, selected interrupts can be enabled. Disabling the interrupt system inhibits the Interrupt Identification Register and disables any Serial Port Interrupt out of the SEC1110 and SEC1210. All other system functions operate in their normal manner, including the Line Status and MODEM Status registers. The contents of the Interrupt Enable Register are described below.

UART_INTERRUPT_EN (DLAB=0) (OFFSET 0X01 RESET=0X00)			UART INTERRUPT ENABLE
BIT	**NAME**	**R/W**	**DESCRIPTION**
7:4	Reserved	R	Always read as 0
3	EMSI	R/W	This bit enables the MODEM Status Interrupt when set to logic 1. This is caused when one of the Modem Status register bits **DDCD**, **TERI**, **DDSR** or **DCTS** (**MSR[3:0]**) changes state.

UART_INTERRUPT_EN (DLAB=0) (OFFSET 0X01 RESET=0X00)			UART INTERRUPT ENABLE
BIT	**NAME**	**R/W**	**DESCRIPTION**
2	ELSI	R/W	This bit enables the Received Line Status Interrupt when set to logic 1. The error sources causing the interrupt are overrun, parity, framing, and break (**LSR[4:1]**). The Line Status Register must be read to determine the source.
1	ETHREI	R/W	This bit enables the Transmitter Holding Register or the TX FIFO becomes empty (i.e., **LSA5** becomes set).
0	ERDAI	R/W	This bit enables the Received Data Available Interrupt (i.e., **LSR.0** becomes set) or, if FIFOs are enabled, the RX Trigger Level is reached. If the FIFOs are enabled, setting this bit also enabled the RX FIFO Character Timeout Interrupt.

13.7.4 FIFO Control Register (FCR)

UART_FIFO_CTL (DLAB=X) (OFFSET 0X02 RESET=0X00)			UART FIFO CONTROL REGISTER
BIT	**NAME**	**R/W**	**DESCRIPTION**
7:6	RECV_FIFO_TRIG	R	These bits are used to set the trigger level for the RCVR FIFO Interrupt Value (trigger level): `00` : 1 Bytes `01` : 4 Bytes `10` : 8 Bytes `11` : 14 Bytes
5:4	Reserved	R/W	Always read as 0
3	DMA_MODE_SEL	R/W	This bit, if set, enables DMA Mode for RX and TX. Two of the unused USB endpoints must be configured for RX and TX, and PERIPHERAL bits set appropriately as indicated in Section 11.16, "Endpoints 1~5 Buffer Registers," on page 139.
2	CLR_XMIT_FIFO	W	Setting this bit to a logic 1 clears all bytes in the XMIT FIFO and resets its counter logic to 0. The shift register is not cleared. However, this bit is self-clearing
1	CLR_RCV_FIFO	W	Setting this bit to a logic 1 clears all bytes in the RCVR FIFO and resets its counter logic to 0. The shift register is not cleared. However, this bit is self-clearing.
0	EXRF	W	Enable XMIT and RECV FIFO. Setting this bit to a logic 1 enables both the XMIT and RCVR FIFOs. Clearing this bit to a logic 0 disables both the XMIT and RCVR FIFOs and clears all bytes from both FIFOs. When changing from FIFO Mode to Non-FIFO (16450) Mode, data is automatically cleared from the FIFOs. This bit must be a 1 when other bits in this register are written to or they will not be properly programmed.

Note: This is a write only register at the same location as the IIR.

© 2013 Microchip Technology Inc.

13.7.5 Interrupt Identification Register (IIR)

UART_INT_ID (DLAB=X) (OFFSET 0X02 RESET=0X01)			UART INTERRUPT IDENTIFICATION REGISTER
BIT	**NAME**	**R/W**	**DESCRIPTION**
7:6	FIFO_EN	R	These two bits are set when the FIFO CONTROL Register bit 0 equals 1
5:4	Reserved	R	Always read as 0
3:1	INTLD	R	These three bits of the IIR are used to identify the highest priority interrupt pending as indicated by Table 13.4, "Interrupt Control Table". In Non-FIFO Mode, bit 3 is a logic 0. In FIFO Mode, bit 3 is set along with bit 2 when a timeout interrupt is pending.
0	IPEND	R	This bit can be used in either a hardwired prioritized or polled environment to indicate whether an interrupt is pending. When bit 0 is a logic 0, an interrupt is pending and the contents of the IIR may be used as a pointer to the appropriate internal service routine. When bit 0 is a logic 1, no interrupt is pending.

By accessing this register, the CPU can determine the highest priority interrupt and its source. Four levels of priority interrupt exist. They are in descending order of priority as follows:

1. Receiver Line Status (highest priority)
2. Received Data Ready
3. Transmitter Holding Register Empty
4. MODEM Status (lowest priority)

Information indicating that a prioritized interrupt is pending and the source of that interrupt is stored in the Interrupt Identification Register (Table 13.4). When the CPU accesses the IIR, the Serial Port freezes all interrupts and indicates the highest priority pending interrupt to the CPU. During this CPU access, even if the Serial Port records new interrupts, the current indication does not change until access is completed. The contents of the IIR are described below.

Table 13.4 Interrupt Control Table

FIFO MODE ONLY	INTERRUPT IDENTIFICATION REGISTER			INTERRUPT SET AND RESET FUNCTIONS			
BIT 3	**BIT 2**	**BIT 1**	**BIT 0**	**PRIORITY LEVEL**	**INTERRUPT TYPE**	**INTERRUPT SOURCE**	**INTERRUPT RESET CONTROL**
0	0	0	1	-	None	None	-
	1	1	0	Highest	Receiver Line Status	Overrun Error, Parity Error, Framing Error or Break Interrupt	Reading the Line Status Register
		0		Second	Received Data Available	Receiver Data Available or RX Trigger Level reached	Read Receiver Buffer or the RX FIFO drops below the trigger level.
1					Character Timeout Indication	No characters have been removed from or input to the RCVR FIFO during the last 4 char times and there is at least 1 char in it during this time	Reading the Receiver Buffer Register
0	0	1		Third	Transmitter Holding Register Empty	Transmitter Holding Register Empty	Reading the IIR Register (if source of interrupt) or writing the Transmitter Holding Register or TX FIFO (if enabled)
	0	0		Fourth	MODEM Status	Clear to Send or Data Set Ready or Ring Indicator or Data Carrier Detect	Reading the MODEM Status Register

© 2013 Microchip Technology Inc.

13.7.6 Line Control Register (LCR)

This register contains the format information of the serial line.

UART_LINE_CTL (DLAB=X) (OFFSET 0X03 RESET=0X01)			UART LINE CONTROL REGISTER
BIT	**NAME**	**R/W**	**DESCRIPTION**
7	DLAB	R/W	Divisor Latch Access Bit (DLAB): This bit must be set to logic 1 to access the Divisor Latches of the Baud Rate Generator during read or write operations. It must be set to logic 0 to access the Receiver Buffer Register, the Transmitter Holding Register, or the Interrupt Enable Register.
6	BREAK_CTL	R/W	Set Break Control Bit: When set to logic 1, the transmit data output (TXD) is forced to the spacing or logic 0 state and remains there (until reset by a low level bit 6) regardless of other transmitter activity. This feature enables the Serial Port to alert a terminal in a communications system.
5	STICK_PARITY	R/W	Stick Parity Bit: When enabled, this bit is used in conjunction with bit 4 to select Mark or Space Parity. When LCR bits 3, 4 and 5 are 1, the parity bit is transmitted and checked as a 0 (Space Parity). If bits 3 and 5 are 1 and bit 4 is a 0, then the parity bit is transmitted and checked as 1 (Mark Parity). If bit 5 is 0 Stick Parity is disabled. If bit 3 is a logic 1 and bit 5 is a logic 1, the parity bit is transmitted and then detected by the Receiver in the opposite state indicated by bit 4.
4	PARITY_SEL	R/W	Even Parity Select Bit: When bit 3 is a logic 1 and bit 4 is a logic 0, an odd number of logic 1s are transmitted or checked in the data word bits and the parity bit. When bit 3 is a logic 1 and bit 4 is a logic 1 an even number of bits are transmitted and checked.
3	PARITY_EN	R/W	Parity Enable Bit: When bit 3 is a logic 1, a parity bit is generated (transmit data) or checked (receive data) between the last data word bit and the first stop bit of the serial data. (The parity bit is used to generate an even or odd number of 1s when the data word bits and the parity bit are summed).
2	STOP_BITS	R/W	This bit specifies the number of stop bits in each transmitted or received serial character. Table 13.5, "Stop Bits" summarizes the information.
1:0	WORD_LEN	R/W	These two bits specify the number of bits in each transmitted or received serial character. The encoding of bits 0 and 1 is as follows: Value (word length): `00` : 5 bits `01` : 6 bits `10` : 7 bits `11` : 8 bits The start, stop and parity bits are not included in the word length

Table 13.5 Stop Bits

BIT 2	WORD LENGTH	NUMBER OF STOP BITS
0	--	1
1	5 bits	1.5
	6 bits	2
	7 bits	
	8 bits	

Note: The Receiver will ignore all stop bits beyond the first, regardless of the number used in transmitting.

13.7.7 Modem Control Register (MCR)

This 8-bit register controls the interface with the MODEM or data set (or device emulating a MODEM). The contents of the MODEM control register are described below.

UART_MODEM_CTL (DLAB=X) (OFFSET 0X04 RESET=0X01)			UART MODEM CONTROL REGISTER
BIT	**NAME**	**R/W**	**DESCRIPTION**
7:5	Reserved	R	Always read as 0
4	LOOPBACK	R/W	This bit provides the loopback feature for diagnostic testing of the Serial Port. When bit 4 is set to logic 1, the following occur: 1. The TXD is set to the Marking State (logic 1). 2. The Receiver Serial Input (RXD) is disconnected. 3. The output of the Transmitter Shift Register is looped-back into the Receiver Shift register input. 4. All MODEM control inputs (nCTS, nDSR, nRI and nDCD) are disconnected. 5. The four MODEM control outputs (nDTR, nRTS, OUT1 and OUT2) are internally connected to the four MODEM control inputs (nDSR, nCTS, RI, DCD). 6. The Modem control output pins are forced inactive high. 7. Data that is transmitted is immediately received. This feature allows the processor to verify the transmit and receive data paths of the Serial Port. In the Diagnostic Mode, the Receiver and the Transmitter interrupts are fully operational. The MODEM control interrupts are also operational but the interrupts' sources are now the lower four bits of the MODEM Control Register instead of the MODEM control inputs. The interrupts are still controlled by the Interrupt Enable Register
3	OUT2	R/W	Output 2 (OUT2): This bit is used to enable a UART interrupt. When **OUT2** is a logic 0, the serial port interrupt output is forced to a high impedance state (disabled). When **OUT2** is a logic 1, the serial port interrupt outputs are enabled.

© 2013 Microchip Technology Inc.

UART_MODEM_CTL (DLAB=X) (OFFSET 0X04 RESET=0X01)			UART MODEM CONTROL REGISTER
BIT	**NAME**	**R/W**	**DESCRIPTION**
2	OUT1	R/W	This bit controls the Output 1 (**OUT1**) bit. This bit does not have an output pin and can only be read or written by the CPU.
1	RTS	R/W	This bit controls the Request To Send (nRTS) output. Bit 1 affects the nRTS output in a manner identical to that described above for bit 0.
0	DTR	R/W	This bit controls the Data Terminal Ready (nDTR) output. When bit 0 is set to a logic 1, the nDTR output is forced to a logic 0. When bit 0 is a logic 0, the nDTR output is forced to a logic 1.

13.7.8 Line Status Register (LSR)

UART_LINE_STAT (DLAB=X) (OFFSET 0X05 RESET=0X60)			UART LINE STATUS REGISTER
BIT	**NAME**	**R/W**	**DESCRIPTION**
7	FIFO_ERROR	R	This bit is permanently set to logic 0 in the 450 Mode. In the FIFO Mode, this bit is set to a logic 1 when there is at least one parity error, framing error, or break indication in the FIFO. This bit is cleared when the LSR is read if there are no subsequent errors in the FIFO.
6	XMIT_ERROR	R	Transmitter Empty (TEMT): This bit is set to a logic 1 whenever the Transmitter Holding Register (THR) and Transmitter Shift Register (TSR) are both empty. It is reset to logic 0 whenever either the THR or TSR contains a data character.
5	XMIT_EMPTY	R	Transmitter Holding Register Empty (THRE): This bit indicates that the Serial Port is ready to accept a new character for transmission. In addition, this bit causes the serial port to issue an interrupt when the Transmitter Holding Register interrupt enable is set high. The **THRE** bit is set to a logic 1 when a character is transferred from the Transmitter Holding Register into the Transmitter Shift Register. The bit is reset to logic 0 whenever the CPU loads the Transmitter Holding Register. In the FIFO Mode this bit is set when the XMIT FIFO is empty, it is cleared when at least 1 byte is written to the XMIT FIFO.
4	BREAK_INT	R	Break Interrupt (BI).: This bit is set to a logic 1 whenever the received data input is held in the Spacing state (logic 0) for longer than a full word transmission time (that is, the total time of the start bit + data bits + parity bits + stop bits). **BI** is reset after the CPU reads the contents of the Line Status Register. In the FIFO Mode this error is associated with the particular character in the FIFO it applies to. This error is indicated when the associated character is at the top of the FIFO. When break occurs only one zero character is loaded into the FIFO. Restarting after a break is received, requires the serial data (**RXD**) to be logic 1 for at least 1/2 bit time. Bits 1 through 4 are the error conditions that produce a Receiver Line Status interrupt bit 3. **Note:** Whenever any of the corresponding conditions are detected and the interrupt is enabled.

UART_LINE_STAT (DLAB=X) (OFFSET 0X05 RESET=0X60)			UART LINE STATUS REGISTER
BIT	**NAME**	**R/W**	**DESCRIPTION**
3	FRAME_ERROR	R	Framing Error (FE): This bit indicates that the received character did not have a valid stop bit. Bit 3 is set to a logic 1 whenever the stop bit following the last data bit or parity bit is detected as a zero bit (Spacing level). The **FE** is reset to a logic 0 whenever the Line Status Register is read. In the FIFO Mode this error is associated with the particular character in the FIFO it applies to. This error is indicated when the associated character is at the top of the FIFO. The Serial Port will try to resynchronize after a framing error. To do this, it assumes that the framing error was due to the next start bit, so it samples this *start* bit twice and then takes in the *data*.
2	PARITY_ERROR	R	Parity Error (PE): This bit indicates that the received data character does not have the correct even or odd parity, as selected by the even parity select bit. The **PE** is set to a logic 1 upon detection of a parity error and is reset to a logic 0 whenever the Line Status Register is read. In the FIFO Mode this error is associated with the particular character in the FIFO it applies to. This error is indicated when the associated character is at the top of the FIFO.
1	OVERRUN_ERROR	R	Overrun Error (OE): This bit indicates that data in the Receiver Buffer Register was not read before the next character was transferred into the register, thereby destroying the previous character. In FIFO Mode, an overrun error will occur only when the FIFO is full and the next character has been completely received in the shift register. The character in the shift register is overwritten but not transferred to the FIFO. The **OE** indicator is set to a logic 1 immediately upon detection of an overrun condition, and reset whenever the Line Status Register is read
0	DATA_READY	R	Data Ready (DR): This bit is set to a logic 1 whenever a complete incoming character has been received and transferred into the Receiver Buffer Register or the FIFO. **DR** is reset to a logic 0 by reading all of the data in the Receive Buffer Register or the FIFO

13.7.9 Modem Status Register (MSR)

This 8-bit register provides the current state of the control lines from the MODEM (or peripheral device). In addition to this current state information, four bits of the MODEM Status Register (MSR) provide change information.

These bits are set to logic 1 whenever a control input from the MODEM changes state. They are reset to logic 0 whenever the MODEM Status Register is read. The bits **DDCD**, **TERI**, **DDSR**, and **DCTS** are also reset by writing a 1 to the respective bit.

UART_LINE_STAT (DLAB=X) (OFFSET 0X06 RESET=0BXXXX0000)			UART MODEM STATUS REGISTER
BIT	**NAME**	**R/W**	**DESCRIPTION**
7	DCD#	R	This bit is the complement of the Data Carrier Detect (nDCD) input. If bit 4 of the MCR is set to logic 1, this bit is equivalent to **OUT2** in the MCR.
6	RI#	R	This bit is the complement of the Ring Indicator (nRI) input. If bit 4 of the MCR is set to logic 1, this bit is equivalent to **OUT1** in the MCR.

© 2013 Microchip Technology Inc.

UART_LINE_STAT (DLAB=X) (OFFSET 0X06 RESET=0BXXXX0000)			UART MODEM STATUS REGISTER
BIT	**NAME**	**R/W**	**DESCRIPTION**
5	DSR	R	This bit is the complement of the Data Set Ready (nDSR) input. If bit 4 of the MCR is set to logic 1, this bit is equivalent to **DTR** in the MCR.
4	CTS	R	This bit is the complement of the Clear To Send (nCTS) input. If bit 4 of the MCR is set to logic 1, this bit is equivalent to nRTS in the MCR.
3	DDCD	RW1	Delta Data Carrier Detect (DDCD): Bit 3 indicates that the nDCD input to the chip has changed state.
2	TERI	RW1	Trailing Edge of Ring Indicator (TERI): Bit 2 indicates that the nRI input has changed from logic 0 to logic 1.
1	DDSR	RW1	Delta Data Set Ready (DDSR): Bit 1 indicates that the nDSR input has changed state since the last time the MSR was read.
0	DCTS	RW1	Delta Clear To Send (DCTS): Bit 0 indicates that the nCTS input to the chip has changed state since the last time the MSR was read.

Note: Whenever bit 0, 1, 2, or 3 is set to a logic 1, a MODEM Status Interrupt is generated.

The Modem Status Register (MSR) only provides the current state of the UART MODEM control lines in Loopback Mode. The SEC1110 and SEC1210 do not support external connections for the MODEM control inputs (nDSR, nRI and nDCD) or for the four MODEM control outputs (nDTR, OUT1 and OUT2).

13.7.10 Scratchpad Register (SCR)

UART_RX_DATA (DLAB=X) (OFFSET 0X07 RESET=0X00)			UART SCRATCH PAD REGISTER
BIT	**NAME**	**R/W**	**DESCRIPTION**
7:0	SCRATCH	R/W	This register has no effect on the operation of the Serial Port. It is intended as a scratchpad register to hold data temporarily.

13.7.11 Programmable Baud Rate Generator (and Divisor)

The incoming clock is divided by the value held in the DLL and DLM registers(1 - 65535) to produce the Baud Rate Generator Output signal (BAUD)

UART_DIV_LAT_LO (DLAB=1) (OFFSET 0X00 RESET=0X01)			UART DIVISOR LATCH LOW
BIT	**NAME**	**R/W**	**DESCRIPTION**
7:0	BAUD_DIVISOR[7:0]	R/W	Least significant 8 bits of the baud rate divisor is stored here.

UART_DIV_LAT_HI (DLAB=1) (OFFSET 0X01 RESET=0X00)			UART SCRATCH PAD REGISTER
BIT	**NAME**	**R/W**	**DESCRIPTION**
7:0	BAUD_DIVISOR[14:8]	R/W	Most significant 8 bits of the baud rate divisor is stored here.

Note: DLL and DLM can only be updated if the **DLAB** bit is set (1). Additionally, unlike the original device, division by 1 generates a BAUD signal that is constantly high.

The table below shows the divisor needed to generate a given baud rate from CLOCK inputs of 48 MHz. The effective clock enable generated is 16x the required baud rate. For clock frequencies (fCLOCK) not covered by this table, the required divisor can be calculated as follows:

Divisor value = uart_clk / (16x desired baud rate)

Table 13.6 UART Baud Rates (48.00 MHz Source)

DESIRED BAUD RATE	DIVISOR USED TO GENERATE 16X CLOCK	PERCENT ERROR
50	60000	0.00
75	40000	0.000
110	27273	0.00
134.5	22305	0.00
150	20000	0.00
300	10000	0.00
600	5000	0.00
1200	2500	0.00
1800	1667	-0.02
2000	1500	0.00
2400	1250	0.00
3600	833	0.04
4800	625	0.00
7200	417	-0.08
9600	313	-0.16
19200	156	0.16
38400	78	0.16
57600	52	0.16
115200	26	0.16
250000	12	0.00
500000	6	0.00

© 2013 Microchip Technology Inc.

Table 13.6 UART Baud Rates (48.00 MHz Source) (continued)

DESIRED BAUD RATE	DIVISOR USED TO GENERATE 16X CLOCK	PERCENT ERROR
1000000	3	0.00
3000000	1	0.00

Table 13.7 UART Baud Rates (4.00 MHz source)

DESIRED BAUD RATE	DIVISOR USED TO GENERATE 16X CLOCK	PERCENT ERROR
9600	26	0.16
19200	13	0.16
38400	7	-6.99

13.7.12 UART Configuration Select Register

UART_CTL1 (OFFSET 0X31 RESET=0X00)			UART CONTROL REGISTER
BIT	**NAME**	**R/W**	**DESCRIPTION**
7:4	Reserved	R	Always read as 0
3	baud_clk_src_alt	R/W	This bit must be 0.
2	POLARITY	R/W	`1` : UARTsin_outand UARTsin_in pins functions are inverted. `0` : UARTsin_outand UARTsin_in pins functions are not inverted.
1	power	R/W	This bit must be 0.
0	baud_clk_src	R/W	This bit must be 0. This divider in CRM block is bypassed so that uart_clk directly goes to the Inventra core when divisor is 1.

Chapter 14 Serial Peripheral Interconnect (SPI1) - Master/Slave

The SPI1 module allows full-duplex, synchronous, and serial communication between the EC and off-chip peripherals, including other micro controllers (MCU).

The module may be programmed to work as a Master or Slave device.

The SPI_MS provides the following features:

The embedded controller has the following timers:

- Full Duplex Mode
- Three wire synchronous transfers
- Master or Slave Mode
- Seven SPI1 Master baud rates
- Slave Clock rate up to spi1_clk/4
- Serial clock with programmable polarity and phase
- Master Mode fault error flag with MCU interrupt capability
- Write collision flag protection
- 8-bit data transmitted Most Significant Bit (MSB) first, Least Significant Bit (LSB) last or the other way around
- 1-bit Slave Select Output port to control external slave devices
- Special function registers interface to the 8051 CPU
- No bi-directional ports; standard SPI pins to be externally connected to 3-state buffers, through the GPIO Auxiliary ports

The component communicates with host microprocessor through SFR interface and INT interface (i.e., intspi). Communication with other off-chip devices is realized through the TR interface (i.e., mosi: group/**SPI1_MOSI**, miso: group/**SPI1_MISO**, sck: group/**SPI1_CLK**, ssn: /**SPI1_CE_N**).

The functional blocks of SPI_MS module are INT, SFR, TR blocks.

The SFR sub-block controls the write/read operations on SFR registers of SPI_MS module. It contains the following:

- Address decoder
- SFR registers, described in SPCON, SPSTA, SPDAT
- Output multiplexor

The TR block controls the SPI transmission process. It is composed of the following:

- the Finite State Machine which plays a key role in operation of the SPI_MS module; it controls the Master or Slave functionality
- System clock counter/divider, which is used to generate the SPI Master clock scko (**SPI1_CLK**); the Master clock is selected from one of seven clock rates: the spi1_clk clock divided by 2, 4, 8, 16, 32, 64 or 128
- Rising and falling edge detector on scki (**SPI1_CLK**) input pin; it is used only in Slave Mode
- Transmission end detector
- Level and falling edge detector on ssn (**SPI1_CE_N**) input pin
- Data shift register

© 2013 Microchip Technology Inc.

The INT block generates interrupt request upon spif and modf flags. The spif flag is when the transmission is finished and the **modf** bit is set when the level on **SPI1_CE_N** input is in conflict with actual Mode, i.e., it is 0 in Master Mode (if **ssdis**=0).

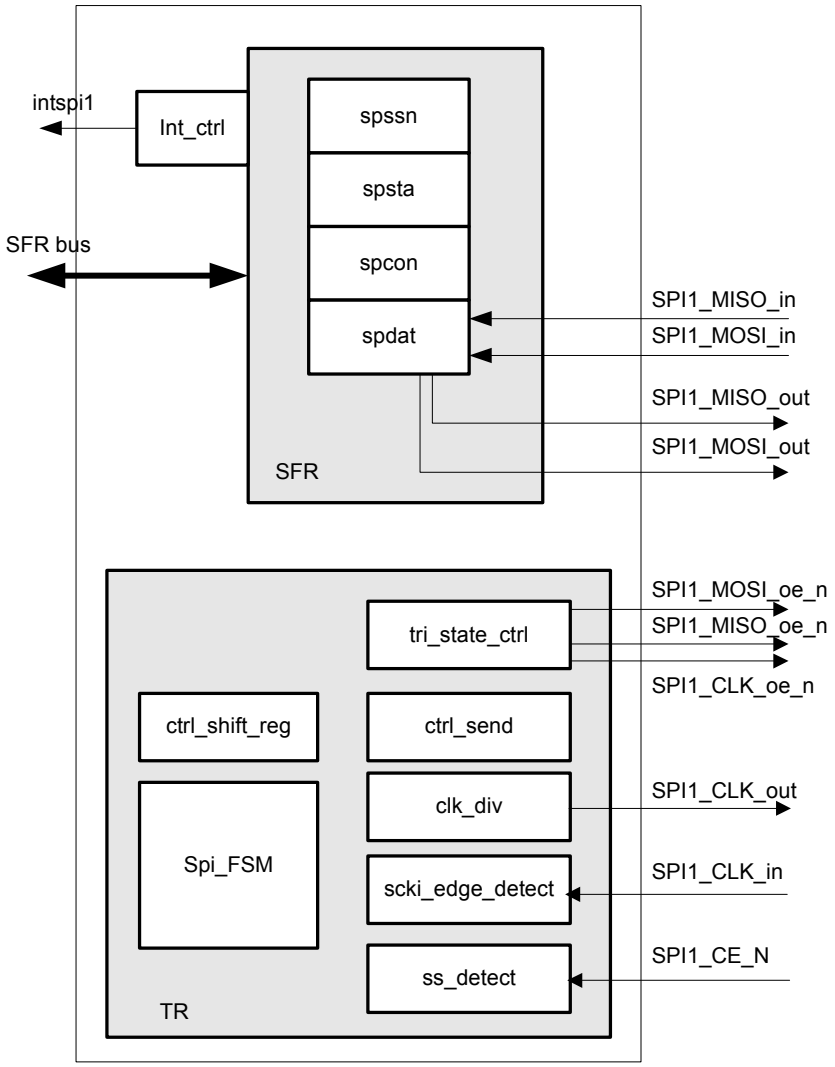

Figure 14.1 SPI1 Master/Slave Block Diagram

14.1 SPI1 Master Mode

In Master Mode (the **mstr** bit of SPCON Register is set) the SPI1 block waits on write operation to the SPDAT Register. If write operation to the SPDAT Register is done, transmission is started. Data shifts out on the **SPI1_MOSI** output pin at the **SPI1_CLK** serial clock output transition (send_edge). Simultaneously, another data byte shifts in from the Slave on Master's **SPI1_MISO** input pin (capture_edge).

Depending on the settings of SPI1 module, the bits of data are sent in turn on rising edge (**cpol=** 0) or on falling edge (**cpol**=1) of Master clock **SPI1_CLK**. Data are received at the falling edge (**cpol**=0) or rising edge (**cpol**=1) of Master clock (scko). This applies either for Master or Slave Transmitter/Receiver, assuming that **SPI1_CLK** is the main clock of the transmission. If **cpha** bit is set, the first bit (MSB) will be sent on the **SPI1_MOSI** output/**SPI1_MISO** output at the first active edge of **SPI1_CLK**. If **cpha** bit is cleared, the first bit (MSB) will be sent half a period of **SPI1_CLK** signal before active edge of this signal. In addition, the data input (**SPI1_MISO** for Master and **SPI1_MOSI** for Slave) is sampled in the half of each bit transmitted, at the opposite edge of the clock at which data are shifted out to **SPI1_MOSI** output.

In Master Mode the SPCON Register is written to the setting desired. In this Mode, **mstr**=1, **ssdis**=0, **spen**=1, **cpha**=x, **cpol**=x and **spr[2:0]** indicate the baud rate. Setting the **spen** bit, enables the **SPI1_CE_N** to be driven (assuming GPIO is configured in SPI1 Mode). Then the SPI1 block waits on write operation to the spdat Register. If write operation

to the spdat Register is done, transmission is started (**SPI1_MOSI** pad is enabled). Data shifts out on the **SPI1_MOSI** pin at the **SPI1_CLK** serial clock transition (send_edge). Simultaneously, another data byte shifts in from the Slave on Master's misoi pin (capture_edge).

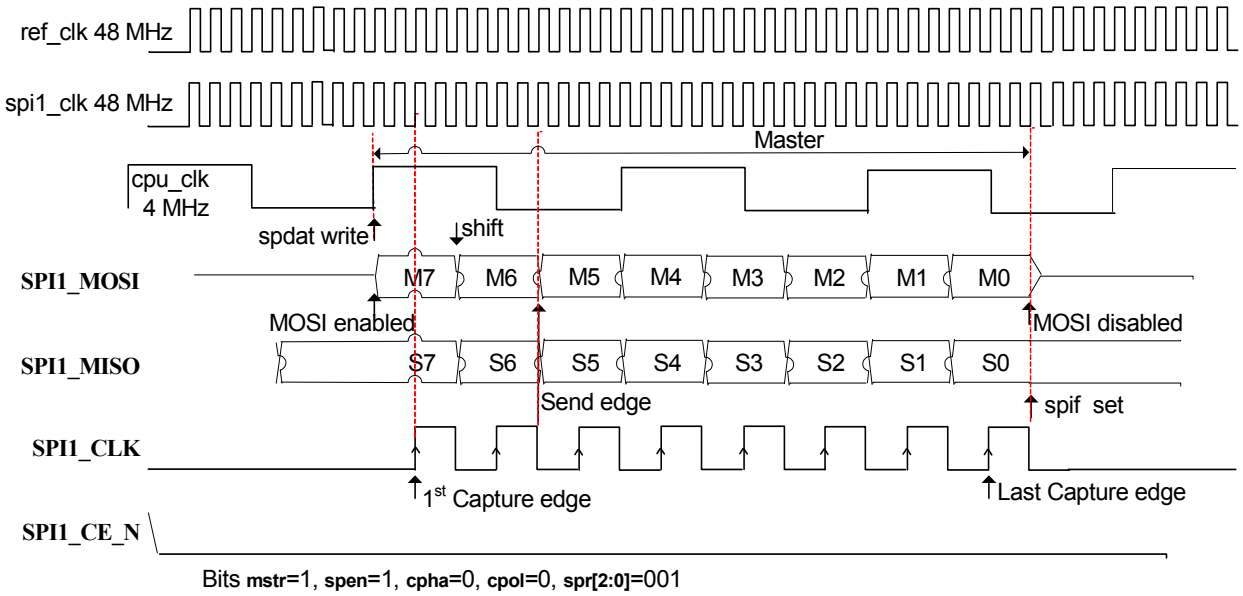

Figure 14.2 SPI1 Data Format in Master Mode (cpha=0, cpol=0)

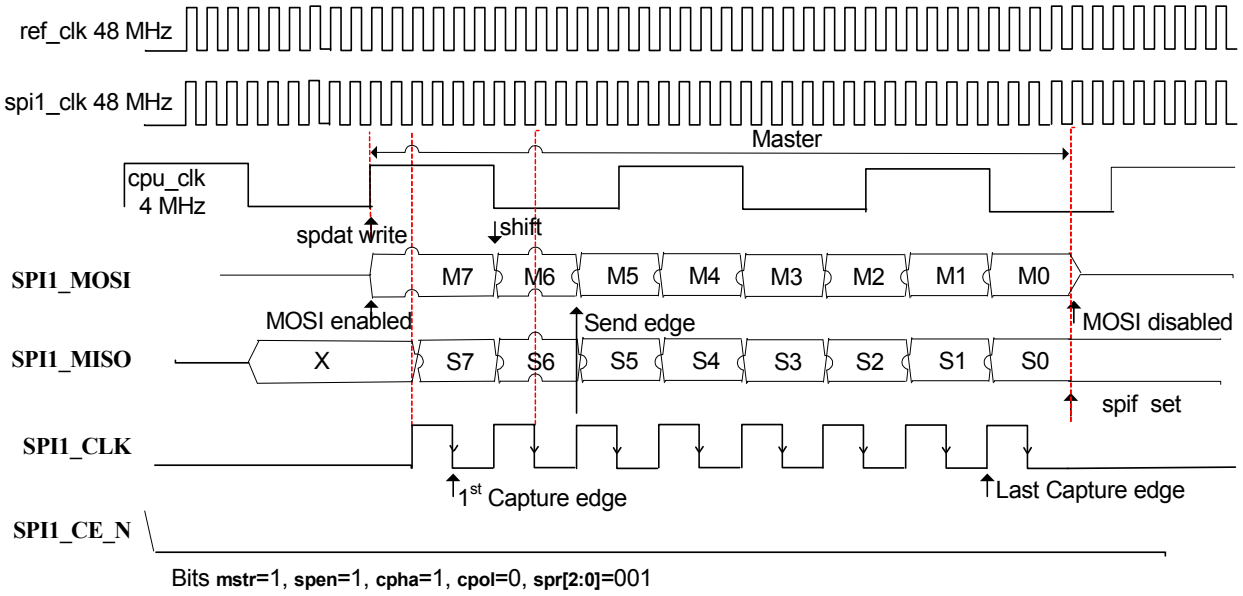

Figure 14.3 SPI1 Data Format in Master Mode (cpha=0, cpol=1)

© 2013 Microchip Technology Inc.

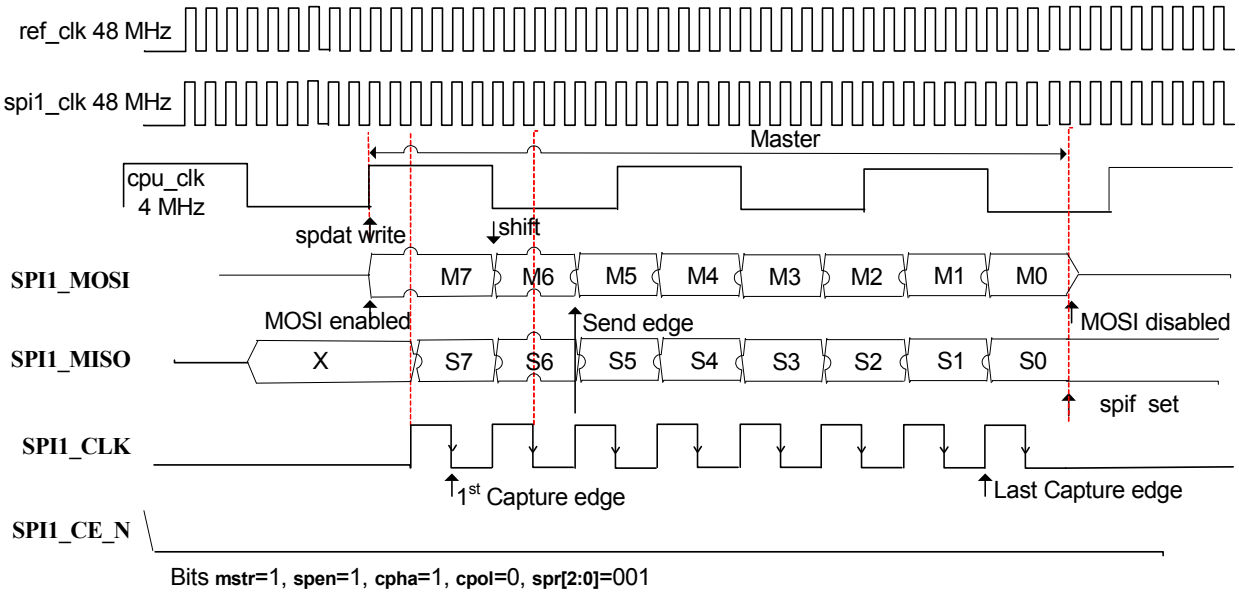

Figure 14.4 SPI1 Data Format in Master Mode (cpha=1, cpol=0)

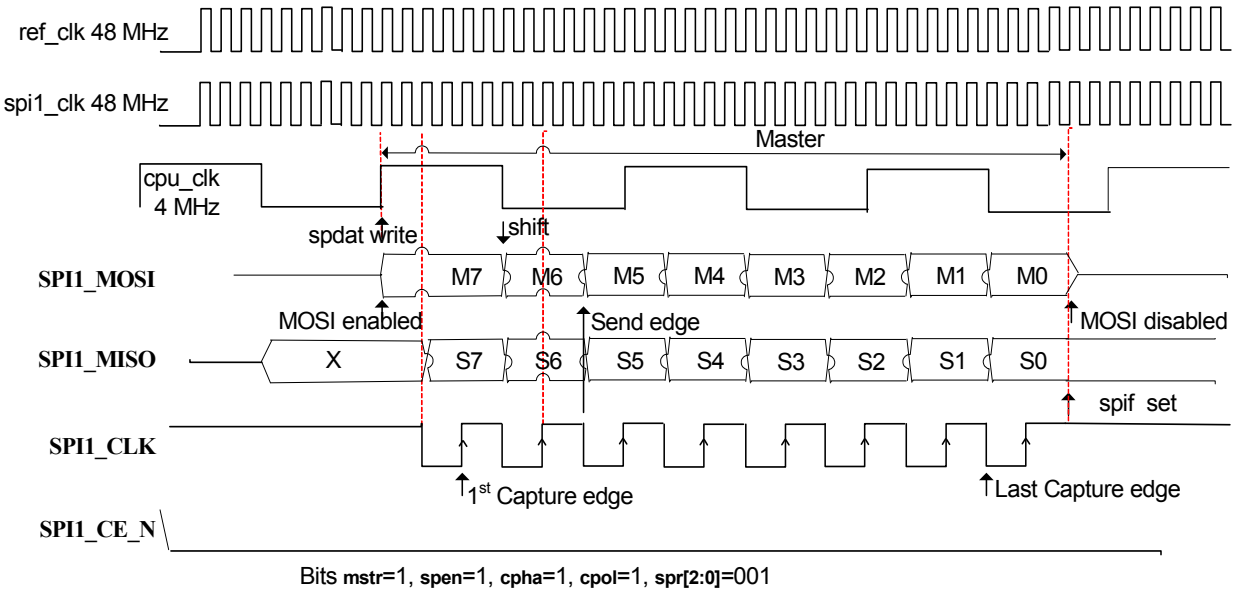

Figure 14.5 SPI1 Data Format in Master Mode (cpha=1, cpol=1)

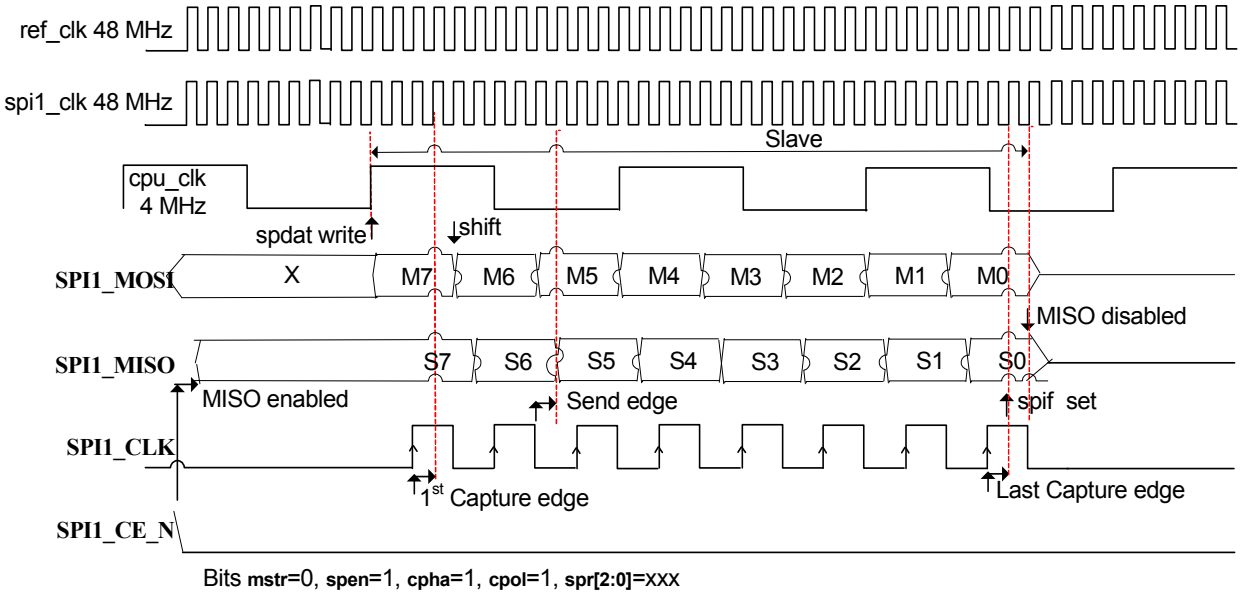

Figure 14.6 SPI1 Data Format in Slave Mode (cpha=1, cpol=1)

14.1.1 SPI1 Slave Mode

First, the SPI1 module has to be configured as a Slave by writing **mstr**=0 in the SPCON Register. Then it has to be enabled by setting **spen**=1. TBD presents process of data transmission in Slave Mode.

The configuration shown is **cpha**=1, **cpol**=1, baud rate is spi1_clk/4 (values of bits **spcon.7**, **spcon.1**, **spcon.0**, i.e., **spr[2:0]** have no effect in this mode).

In Slave Mode the SPI1 block waits on low level on **SPI1_CE_N** input. The **SPI1_CE_N** input must remain low until the transmission is completed. The beginning of transmission depends on the state of the **cpha** bit of SPCON Register.

When **cpha** is cleared, then the Slave must begin driving its data before the first **SPI1_CLK** input edge, and a falling edge on the **SPI1_CE_N** input is used to start the transmission. When the **cpha** bit is set, then the Slave uses the first edge of **SPI1_CLK** input as a transmission start signal.

© 2013 Microchip Technology Inc.

Chapter 15 SPI2 Controller

The SPI2 controller will have three basic modes of operation. When operating as a memory bus to a SPI ROM, it will take the 8051 ROM accesses (0x0000-0xFFFF), convert them to SPI ROM accesses and provide the data back to the 8051 when it has been constructed, along with a ready signal at the appropriate time. In parallel with SPI ROM reading hardware is a 32 byte cache that keeps track of data that has been fetched.

The second mode of operation is for all SPI2 operations that are not fast reads or Trace FIFO accesses. In this mode, the firmware is responsible for setting up a command buffer, and control registers. The firmware then fires the command by setting a **GO** bit. The firmware is also responsible for parsing the response from the SPI2 Slave.

The last mode of operation is for debugging. The firmware writes to XDATA addresses 0xBFFE and 0xBFFF to send out trace message to trace FIFO board. Any reads to these locations may cause debugger to misbehave. The SPI2 controller sends out accesses to these locations as special messages that are ignored by the SPI ROM, but are intercepted by the debugging hardware.

The SPI2 interface is always enabled after reset. It can be disabled by setting the **SPI_DISABLE** bit in the UTIL_CONFIG1 Register.

15.1 Device Operation Instructions

Only one operation is supported automatically in hardware: FAST_READ. All instructions associated with Automatic Address Increment (AAI) will not be supported. Everything else will be handled through firmware intervention.

Table 15.1 SPI Opcodes

INSTRUCTION	DESCRIPTION	OP CODE CYCLE	ADDRESS CYCLE(S)	DUMMY CYCLE(S)	DATA CYCLE(S)	TOTAL	RESP
WRSR	Write Status Register	0x01	0	0	1	2	FW
Byte_program	To program one Data Byte	0x02	3	0	1	5	FW
READ	Read Slow Mode	0x03	3	0	1 to	5 to ¥	N/A
WRDI	Write Disable	0x04	0	0	0	1	FW
RDSR	Read Status Register	0x05	0	0	1 to	2 to	FW
WREN	Write Enable	0x06	0	0	0	1	FW
FAST_READ	Read Fast Mode	0x0B	3	1	1 to	6 to	HW
SCTR_ERASE	4 KByte Sector Erase	0x20 0xD7	3	0	0	4	FW
DUAL FAST_READ	Dual Read Fast Mode	0x3B	3	1	1 to	6 to	HW
EWSR	Enable Write Status Register	0x50	0	0	0	1	FW
32BLK_ERASE	32 KByte Block Erase	0x52	3	0	0	4	FW
CHIP_ERASE	Erase full memory array	0x60 0xC7	0	0	0	1	FW
EBSY	Enable SO to output Busy during AAI programming	0x70	0	0	0	1	N/A

Table 15.1 SPI Opcodes (continued)

INSTRUCTION	DESCRIPTION	OP CODE CYCLE	ADDRESS CYCLE(S)	DUMMY CYCLE(S)	DATA CYCLE(S)	TOTAL	RESP
DBSY	Disable SO to output Busy during AAI programming	0x80	0	0	0	1	N/A
RDID	Read ID	0x90	3	0	1 to	5 to	FW
JEDEC_ID	JEDEC ID read	0x9F	0	0	3 to	4 to	FW
RDCR	Read Config Register	0xA1	0	0	1	2	FW
RDES	Read Electronic Signature	0xAB	3	0	1 to	5 to	FW
AAI_PROGRAM	Auto Address Increment programming	0xAD	3	0	2 to	6 to	N/A
64BLK_ERASE	64 KByte Block Erase	0xD8	3	0	0	4	FW
WRCR	Write Config Register	0xF1	0	0	1	2	FW

Note 15.1 One bus cycle is eight clock periods.

Note 15.2 Address bits above the most significant bit of each density should be set to 0x00.

15.2 Operation of the High Speed Read Sequence

The SPI2 controller will automatically handle code reads going out to the SPI ROM Address. When the controller detects a read, the controller drops the CE#, puts out a 0x0B, followed by the 24 bit address. Bits 23 and 22 are forced to zero, and address bits 21 through 0 come directly from the XDATA address bus. The SPI2 controller then puts out a DUMMY byte because it is Fast Read Mode. The next eight clocks clock in the first byte. When the first byte is clocked in a ready signal is sent back to the processor, and the processor gets one byte.

After the processor gets the first byte, its address will change. If the address is one more than the last address, the SPI2 controller will clock out one more byte. If the address in anything other than one more than the last address, the SPI2 controller will terminate the transaction by taking CE# high. As long as the addresses are sequential, the SPI2 controller will keep clocking data in.

© 2013 Microchip Technology Inc.

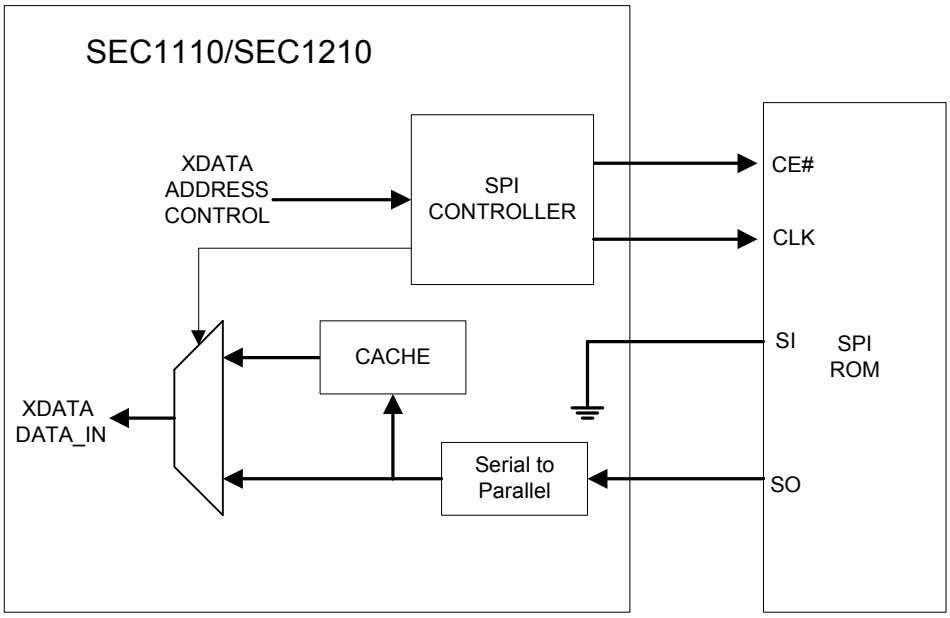

Figure 15.1 SPI Hi-Speed Read Operation

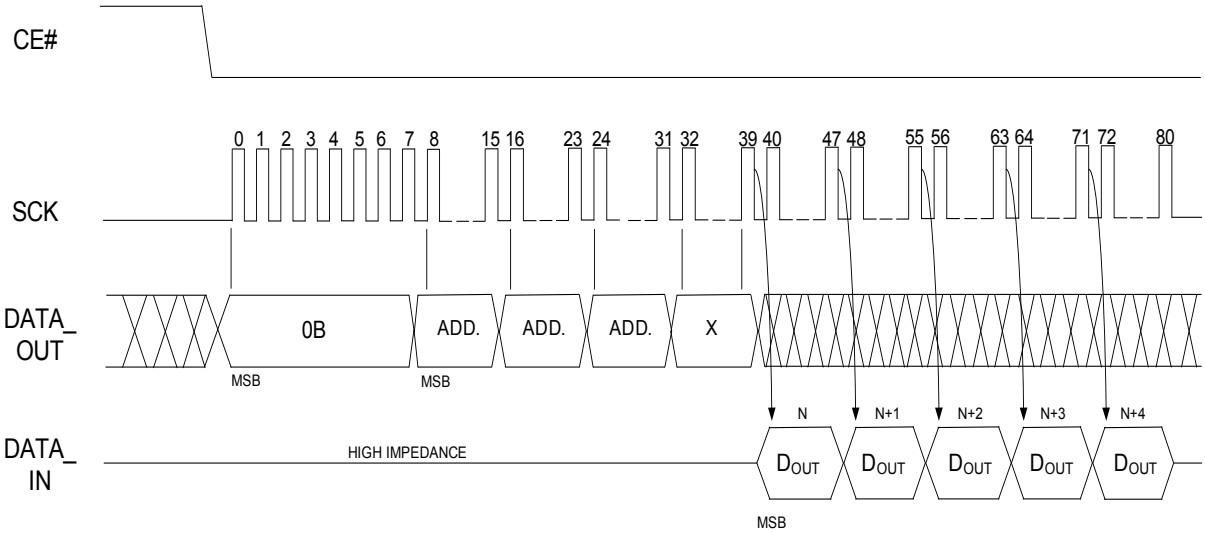

Figure 15.2 SPI Hi-Speed Read Sequence

15.3 Operation of the Dual High Speed Read Sequence

The SPI2 controller will support Dual Data Mode. When configured in Dual Data Mode, the SPI2 controller will automatically handle XDATA reads going out to the SPI ROM. When the controller detects a read, the controller drops the CE#, puts out a 0x3B (the value must be programmed into the SPI_ FR_OPCODE Register) followed by the 24-bit address. Bits 23 and 22 are forced to zero, and address bits 21 through 0 come directly from the XDATA address bus. The SPI2 controller then puts out a DUMMY byte because it is fast read Mode. The next four clocks clock in the first byte. The data appears two bits at a time on data out and data in. When the first byte is clocked in a ready signal is sent back to the processor, and the processor gets one byte.

After the processor gets the first byte, its address will change. If the address is one more than the last address, the SPI2 controller will clock out one more byte. If the address in anything other than one more than the last address, the SPI controller will terminate the transaction by taking CE# high. As long as the addresses are sequential, the SPI controller will continue to clock in data.

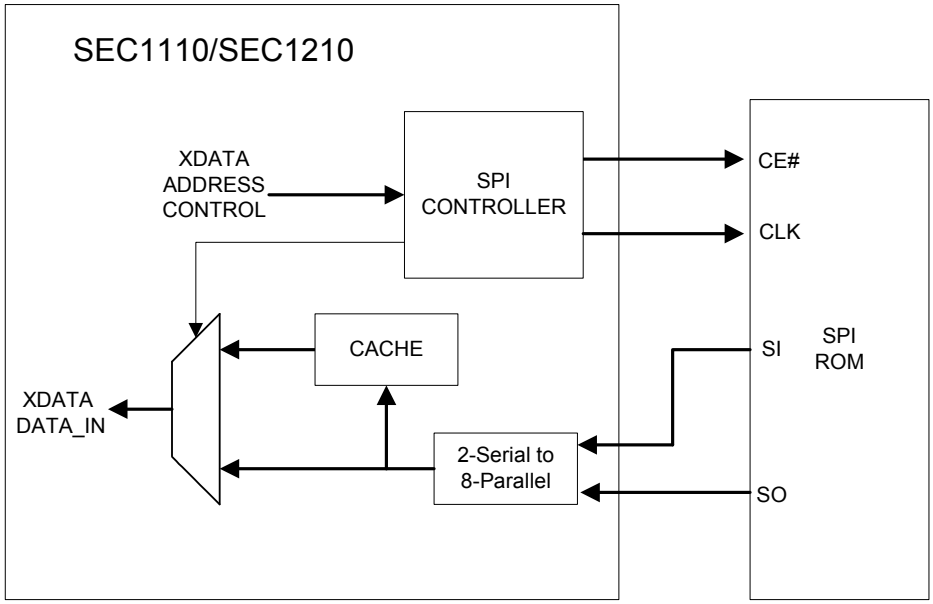

Figure 15.3 SPI Dual Hi-Speed Read Operation

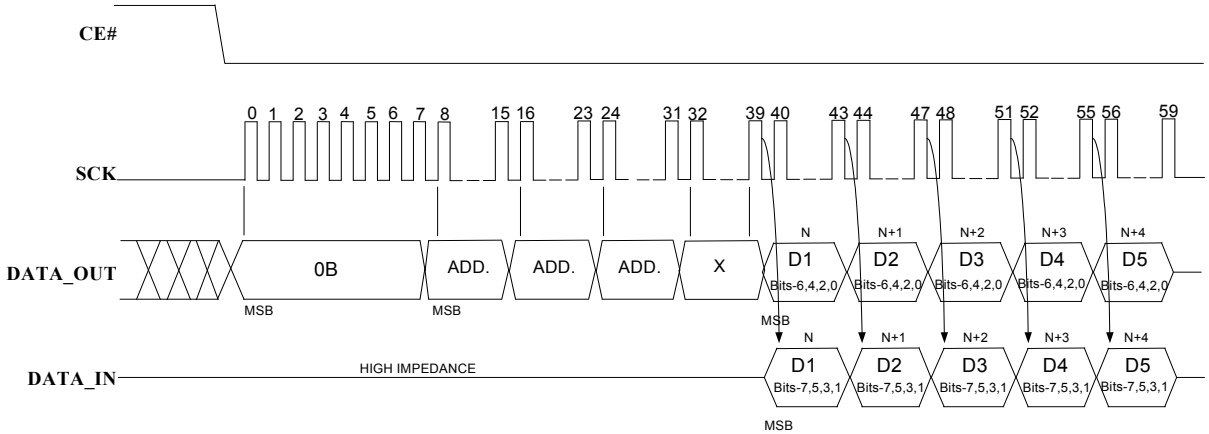

Figure 15.4 SPI Dual Hi-Speed Read Sequence

15.4 32-Byte Cache

There is a 32-byte pipeline cache, including a base address pointer and a length pointer. Once the SPI controller detects a jump, the base address pointer is initialized to that address. As each new sequential data byte is fetched, the data is written into the cache, and the length is incremented. If the sequential run exceeds 32 bytes, the base address pointer is incremented to indicate the last 32 bytes fetched. If the firmware does a jump, and the jump is in the cache address range, the fetch is done in 1 clock from the internal cache instead of an external access.

15.5 Operation of the FW interface to the SPI2 Port When Not Doing Fast Reads

There is an 8-byte command buffer (SPI_CMD_BUF[7:0]) and an 8-byte response buffer (SPI_RESP_BUF[7:0]). A length register is also provided that will count out the number of bytes (SPI_CMD_LEN). A self-clearing **GO** bit in the SPI_CTL register is provided. Once the **GO** bit is hit, the HW drops SPI_CE#, and starts clocking. It will put out SPI_CMD_LEN x 8 number of clocks. After the first byte, the COMMAND has been sent out, and the SPI_DATA_IN

 © 2013 Microchip Technology Inc.

is stored in the SPI_RESP buffer. If the SPI_CMD_LEN is longer than the SPI_CMD_BUF, don't cares are sent out on the SPI_DATA_OUT lines.

Note: Assuming that program execution is out of internal RAM or ROM when this Mode is used. Automatic reads and writes happen when there is an external XDATA read or write, using the serial stream discussed earlier.

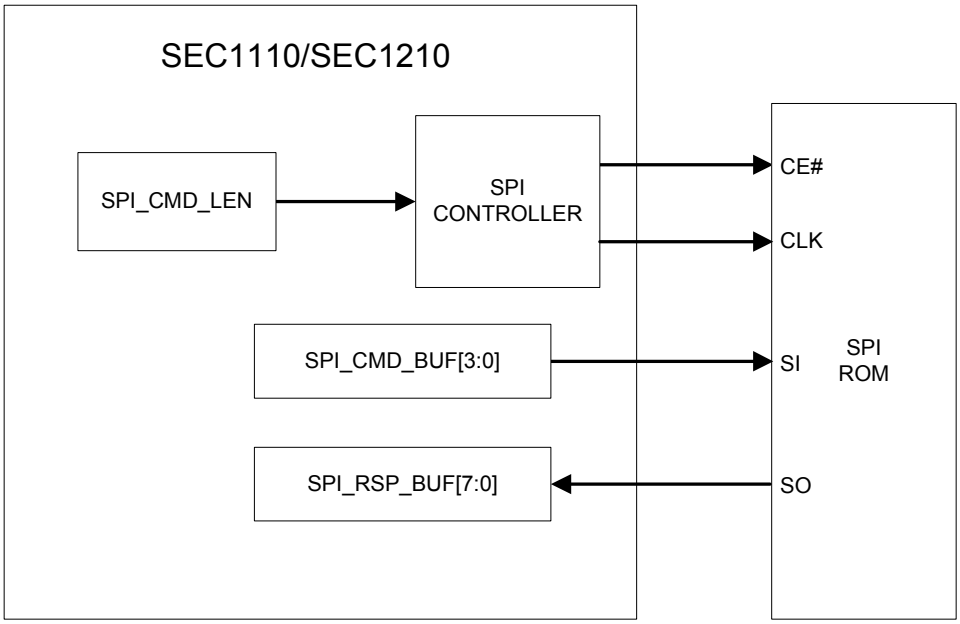

Figure 15.5 SPI Firmware-Controlled Operation

15.5.1 Erase Example

To do a SCTR_ERASE, 32BLK_ERASE, or 64BLK_ERASE, a 0x20 or 0x52 or 0xD8 is written to the first byte of the command buffer, followed by a 3-byte address, and the length is set to 4 bytes, then the go bit is hit. The the CE# is dropped, 8 clocks are counted out and the COMMAND is then available on the data out pin. There are three bytes of address, and three data bytes from the **SPI_DATA_IN**, all of which can be ignored.

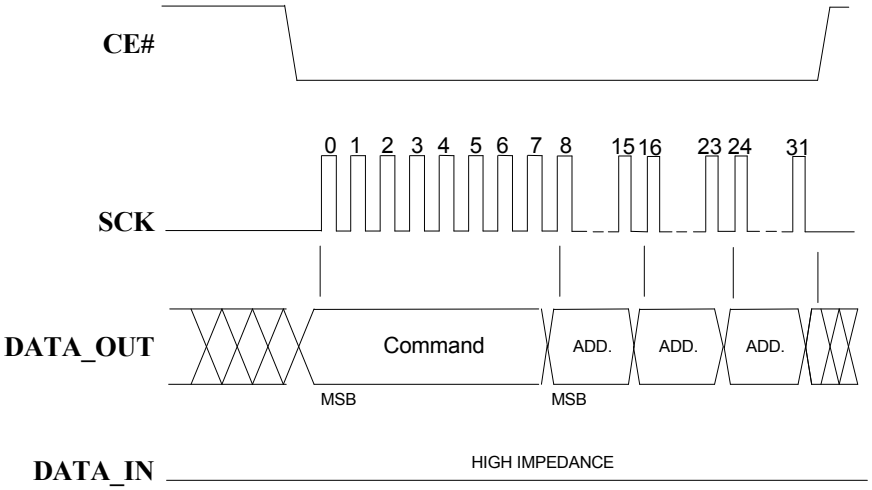

Figure 15.6 SPI Erase Sequence

15.5.2 Byte Program Example

To do a Byte Program, firmware writes a 0x02 to the first byte of the command buffer, followed by a 3-byte address, and sets the length to 5 bytes, then hits the **GO** bit. The HW drops the CE#, counts out 8 clocks and puts out the COMMMAND on the data out pin. Then there are three bytes of address, followed by one byte of data. There are four data bytes from the **SPI_DATA_IN**, all of which could be ignored.

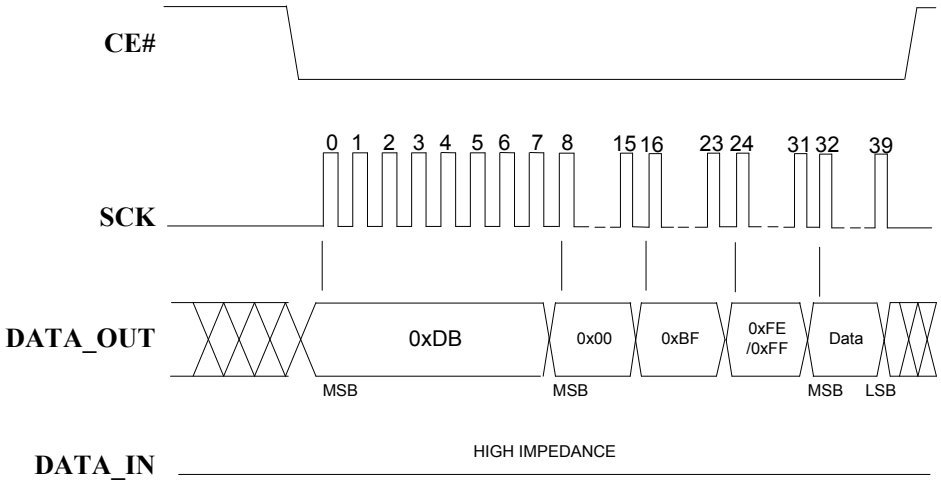

Figure 15.7 SPI Byte Program

15.5.3 Command Only Program Example

To do a single byte command like WRDI, WREN, EWSR, CHIP_ERASE, EBSY, or DBSY, the chip writes the opcode into the first byte of the SPI_CMD_BUF. The SPI_CMD_LEN is set to 1. Then the **GO** bit is hit. The chip drops the CE#, counts out 8 clocks and puts out the opcode on the **DATA_OUT** pin. There will be no data from the **SPI_DATA_IN** because only one byte was clocked out.

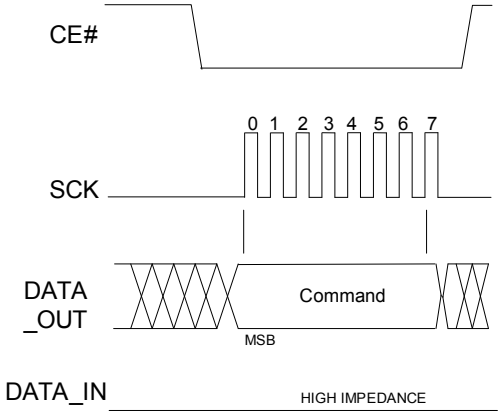

Figure 15.8 SPI Command Only Sequence

15.5.4 JEDEC-ID Read Example

To do a JEDEC-ID command, the chip writes the 0x9F into the first byte of the SPI_CMD_BUF. The SPI_CMD_LEN is set to 4. Then the **GO** bit is hit. The chip drops the CE#, counts out 8 clocks and puts out the opcode on the **DATA_OUT** pin. Then the chip clocks out 3 unused bytes. After the first byte, the data on **SPI_DATA_IN** is clocked

© 2013 Microchip Technology Inc.

into the SPI_RSP_BUF. At the end of the command, there will be three valid bytes in the SPI_RSP_BUF. In this example, 0xBF, 0x25, 0x8E.

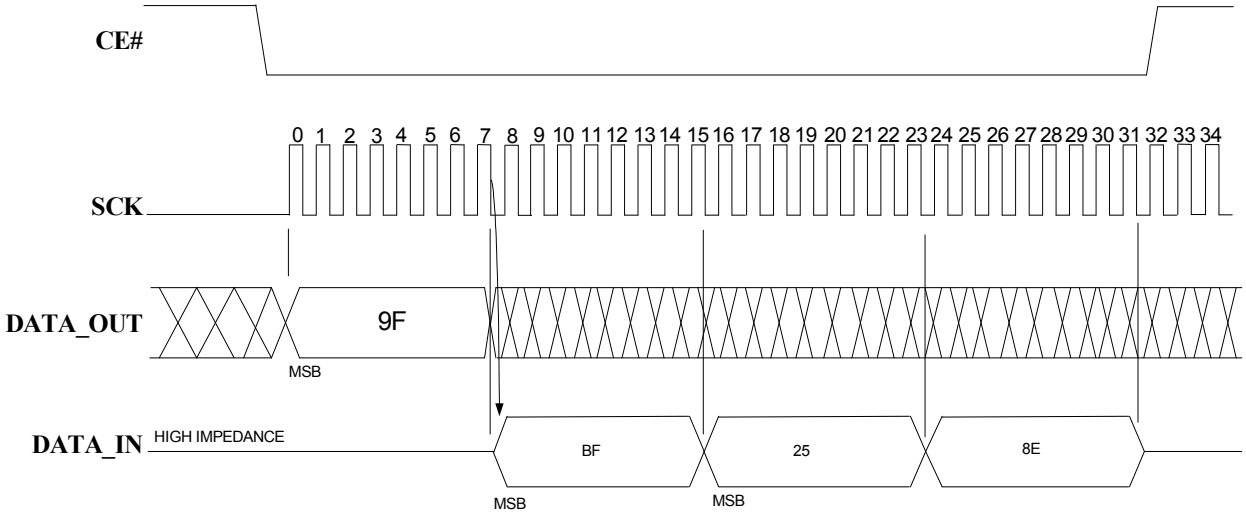

Figure 15.9 SPI JEDEC-ID Sequence

15.5.5 Trace FIFO Write Example

To do a Trace FIFO write, the chip writes to either XDATA address 0xBFFE or 0xBFFF. The SPI2 controller treats these as special cases. For these two addresses, the SPI controller puts out the debug opcode, from the SP_TF_OPCODE Register. It then puts out a 24-bit address, followed by the data from the XDATA Register.

The writes go out as unrecognized commands to the ROM which will ignore them.

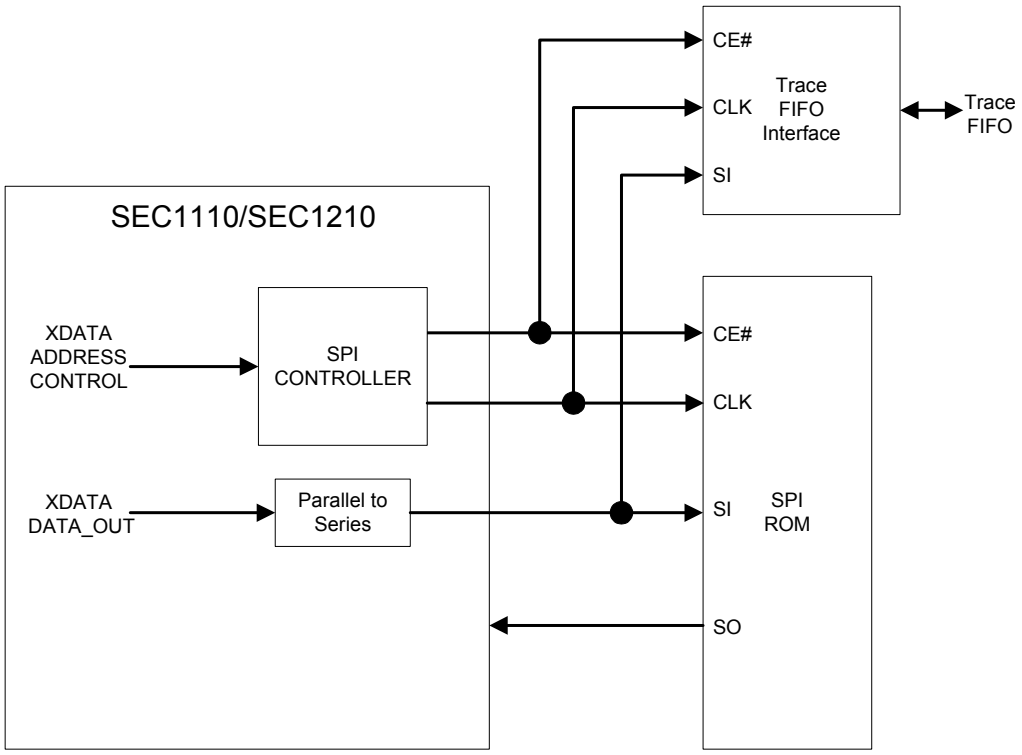

Figure 15.10 SPI Trace FIFO Write Operation

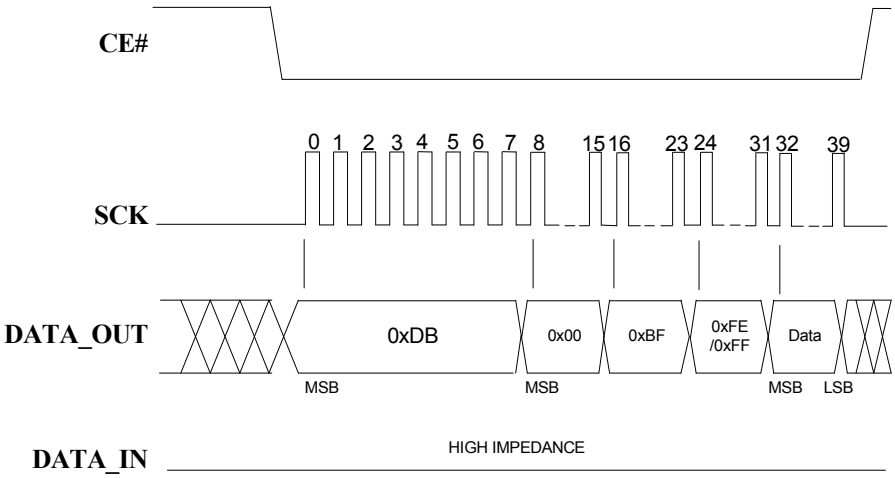

Figure 15.11 SPI Trace FIFO Write Example

15.5.6 SPI2 Registers

SPI2_CTL (0X9A00 - RESET=0X02)			**SPI2 MODE CONTROL**
BIT	**NAME**	**R/W**	**DESCRIPTION**
7	SPI_SPEED	R/W	This bit reflects the strap option of the SPI_SPEED option during reset. This is to allow the firmware to know what speed it is operating at. 0: spi2_clkfrequencydivide by 2 1: spi2_clkfrequency This bit is always 0 in SEC1110 and SEC1210 A1 revision. This bit is always 0 in SEC1110 and SEC1210 A1 revision.
6:5	Reserved	R	Always read as 0
4	**FORCE_CE**	**R/W**	**When this bit is set, it forces the SPI chip enable low.**
3	DUAL_OUT_EN	R/W	0 : Dual output disabled for fast reads 1 : Dual output enabled for fast reads
2	MODE_SEL	R/W	Sets the SPI clock Mode: 0: Mode 0 1: Mode 3
1	CACHE_EN	R/W	Enable the SPI cache
0	GO	R/W	This is a self-clearing bit. Setting this bit will cause the SPI transaction to initiate.

© 2013 Microchip Technology Inc.

SPI2_CMD_LEN (0X9A01 - RESET=0X00)			SPI2 COMMAND LENGTH
BIT	**NAME**	**R/W**	**DESCRIPTION**
7:0	CMD_LEN[7:0]	R/W	This is the length of the SPI transaction length for firmware-initiated transactions.

SPI2_TF_OPCODE (0X9A02 - RESET=0XDB)			SPI2 TRACE FIFO OPCODE
BIT	**NAME**	**R/W**	**DESCRIPTION**
7:0	TF_OPCODE	R/W	This is the opcode used when the processor does a write to 0xBFFE or 0xBFFF. Use the value of 0xDB.

SPI2_FR_OPCODE (0X9A03 - RESET=0X0B)			SPI2 FAST READ OPCODE
BIT	**NAME**	**R/W**	**DESCRIPTION**
7:0	FR_OPCODE	R/W	This is the opcode used when the processor does a fast read. 0x0B: Single output read 0x3B: Dual output read

SPI2_CMD_BUF (0X9A08~0X9A0F - RESET=0X00)			SPI2 COMMAND BUFFER
BYTE	**NAME**	**R/W**	**DESCRIPTION**
7:0	SPI_CMD_BUF[0:7]	R/W	This buffer is used by 8051 to store outgoing SPI commands. See behavioral description.

Note: The first byte to go out is SPI_CMD_BUF0 at location 0x9A08.

SPI2_RSP_BUF (0X9A10~0X9A17 - RESET=0X00)			SPI2 RESPONSE BUFFER
BYTE	**NAME**	**R/W**	**DESCRIPTION**
7:0	SPI_RSP_BUF[0:7]	R/W	This buffer is used by 8051 to store incoming SPI responses. See behavioral description.

Note: The first byte to be written is SPI_RSP_BUF0 at location 0x9A10.

15.6 SPI2 Timing

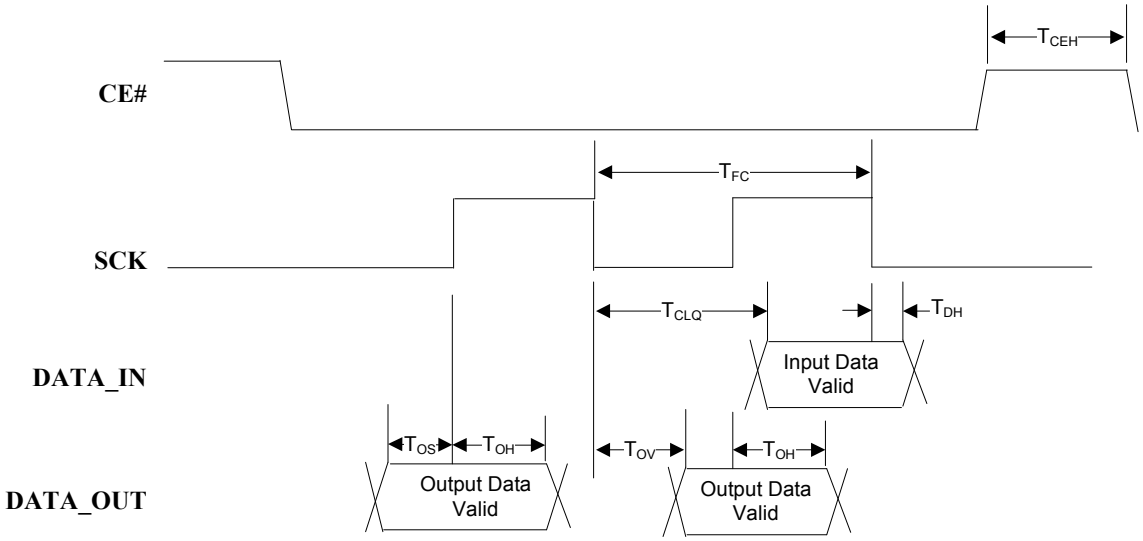

Figure 15.12 SPI Timing

© 2013 Microchip Technology Inc.

Chapter 16 Clock and Reset

This block generates all the clocks for the CPU and sub-system peripherals. It also has the control registers needed for oscillator testing and power controls. The block diagram of this block is shown in Figure 16.1.

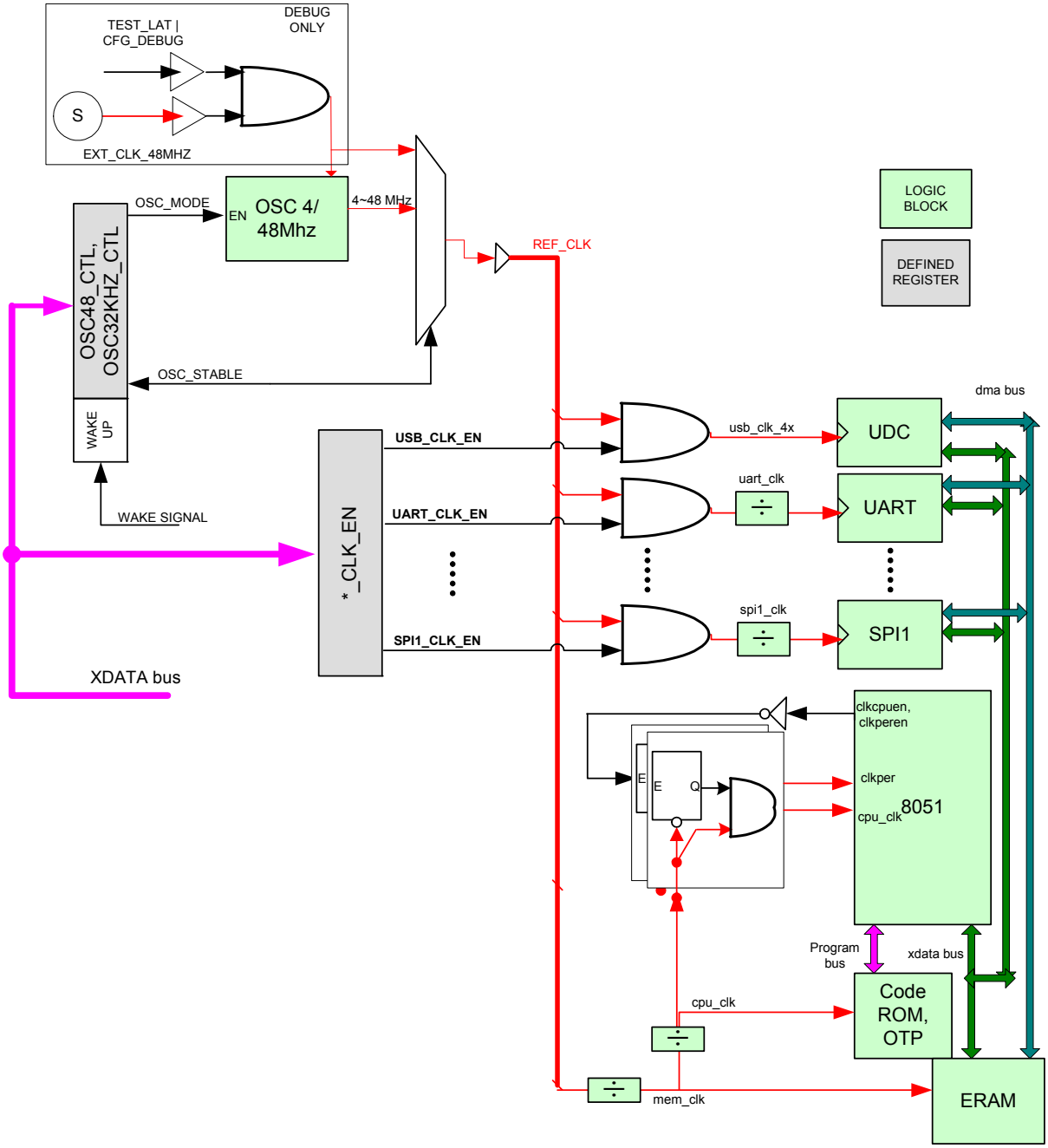

Figure 16.1 Clock Generation

16.1 Reset

The following are the reset sources to the chip:

- Internal power on reset from voltage level detector.
- Exit from STOP Mode (low pulse on **RESET_N** pad). The regulators are off in STOP Mode, and this is similar to power on reset.
- Watchdog timer overflow occurs.
- Reset from debug OCDS unit (through JTAG) is received.
- A software reset will be generated after two consecutive 1 value writes to the **srstreq** bit in the srst register (0F7h).

On the above reset events, the following occurs:

1. All registers are set to their default values.
2. All endpoints are disabled.
3. If the SEC1110 or SEC1210 was in the power down state, then it is cleared.
4. All peripheral IOs: SPI1, SPI2, UART, USB, SC1, SC2, and GPIOs go to their reset state.

A reset from debug OCDS unit (through JTAG) resets only the 8051 and SFR peripherals.

16.2 Oscillator

The internal oscillator frequency is 4 or 48 MHz. If the oscillator is turned off, a wake-up event (USB wake-up or GPIO activity) can be programmed to start it. Once it has started, the 8051 can turn it off manually through the OSC48_CTL Register.

16.2.1 System Clock Shutdown

To shutdown the 48 MHz oscillator, the 8051 clears the **OSC_MODE2** bit.

16.2.2 System Clock Wake-up

If the oscillator is turned off, a wake-up event can be programmed to start it. The WakeOn Event block enables various wake-up events such as USB, or GPIO activity. When a wake-up event is detected, the following happens:

1. The system clock source is indicated by **OSC48_SEL[1:0]** bits. In case of 48 MHz oscillator selection, the **OSC_MODE[1:0]** bits indicate the frequency selected, before clock shutdown.
2. The hardware waits for the selected oscillator source to settle down.
3. Once the clock is stable, the system clock is enabled to the CPU sub-system. If the CPU sub-system was powered down, then the CPU executes out of reset. If the CPU sub-system was powered but in a low-power state, then the CPU resumes executing instructions, from where it was suspended.
4. If it was a USB wake-up event, the firmware will receive a USB_WU_INT interrupt from USB.
5. Firmware must ensure that the clocks to synchronous devices are enabled before accessing them.
6. Non-synchronous devices can be accessed at any time.

If the chip was expected to respond to a USB wake-up event, then the firmware must have selected the 48 MHz oscillator before going to suspend. If fast response to a wake-up event is not required, then the firmware selects the low frequency modes of the oscillator before going to suspend.

© 2013 Microchip Technology Inc.

16.3 CLK_PWR Registers Summary

The register addresses indicated below are offset address to XDATA base memory address 0xA000.

Table 16.1 CLK_PWR Register Map

REGISTER NAME	XDATA ADDRESS	EC TYPE
OSC48_CTL	0x00	R/W
OSC48_SETTLE_CLKS	0x01	R/W
OSC32KHZ_CTL	0x02	R/W
OSC_TEST_REGS	0x03 ~ 0x09	R/W
MEM_CLK_DIV	0x0A	R/W
CPU_CLK_DIV	0x0B	R/W
USB_CLK_CTL	0x0C	R/W
UART_CLK_DIV	0x0D	R/W
SPI1_CLK_DIV	0x0E	R/W
SPI2_CLK_DIV	0x0F	R/W
SC1_CLK_DIV	0x10	R/W
SC2_CLK_DIV	0x11	R/W
WOE_CTL	0x12	R/W
WOE_STS	0x13	R/W
POWER_STS1	0x14	R/W
POWER_CTL1	0x15	R/W
POWER_CTL2	0x16	R/W
POWER_STS2	0x17	R/W
OTP_CFG	0x18	R/W
Reserved	0x19~0x1A	R
CLKPWR_VERSION	0x1B	R
Reserved	0x1C~0x1F	R
CLKPWR_TEST1	0x20	R/W
CLKPWR_TEST2	0x21	R/W
CLKPWR_TEST3	0x22	R/W
CLKPWR_TEST4	0x23	R
OSC4_FTRIM_LSB	0x26	R/W
OSC4_FTRIM_MSB	0x27	R/W

© 2013 Microchip Technology Inc.

16.4 Oscillator Registers

16.4.1 Oscillator Control Register

Table 16.2 Oscillator 48 MHz Clock Control Register

OSC48_CTL (0X000~0X000 – RESET=0X00 OR 0X03)			OSCILLATOR CONTROL REGISTER
BIT	**NAME**	**R/W**	**DESCRIPTION**
7	EXT_OSC_SLEEP	R/W	If in external 48 MHz oscillator setting this bit enters Sleep Mode, where the clock is gated.
6	OSC_DTRIM	R/W	When this bit is set, it enables the dynamic tuning of the internal oscillator. The USB interface must also be enabled. `0` : Disable dynamic tuning (default) `1` : Enable dynamic tuning
5:3	OSC_MODE[2:0]	R/W	These bits indicate the mode of the internal oscillator. Bit 2 indicates if the 48 MHz oscillator is in Sleep Mode. Bits 1:0 indicate the mode of the 48 MHz internal oscillator. `000` : The oscillator is enabled in low power state and outputs 4 MHz. This setting is default when the external oscillator is not selected (**OSC48_SEL**=0). `001` : Reserved. `010` : The oscillator is enabled and outputs 48 MHz `011/111` : Reserved in SEC1110/SEC1210. When Bit 2 is also set, the 111 code indicates that the Oscillator is powered, but its output is gated to lower power consumption. The OSC_MODE[1:0] bits are not updated when OSC_MODE[2:0] is written with 111, thus preserving the oscillator frequency mode. This feature is used when instant start up time is required out of sleep modes. Bit 2 = 1: The internal 48 MHz oscillator is in Sleep Mode. An external event from the WIC block can enable the oscillator if the **OSC48_SEL0** bit is 0. On wake-up, the oscillator powers up to 48 MHz or 4 MHz depending on **OSC_MODE[1:0]** setting, after settling time. When **OSC_MODE[1:0]** bits are changed (and **OSC_MODE2**=0), the clocks are gated until the oscillator setting time. If External Oscillator Mode is selected, then the internal oscillator is powered down automatically except when Trimming (**OSC_DTRIM**) is enabled. In this case, the **OSC_MODE[2:0]** bits cannot be changed when **OSC48_SEL0** bit is set
2:1	OSC48_SEL[1:0]	R/W	These bits indicate the oscillator selection. `00` : Internal 48 MHz oscillator selected, and oscillator clocks is seen after settling time. `01` : External 48 MHz oscillator selected. This state can be written to only if **EXT_OSC48_PRESENT** is 1. `10` : Reserved `11` : Reserved.
0	EXT_OSC48_PRESENT	R	This bit indicates if external oscillator is connected. `0` : (default) No external oscillator. `1` : External 48 MHz oscillator connected

There are two primary sources of clock to the chip, the external or internal 48 MHz oscillator. Note that the external oscillator input is disabled in production parts and is used for test only. The internal oscillator operates in 3 modes

 © 2013 Microchip Technology Inc.

as indicated by the **OSC_MODE** bits, at 48 MHz, 4 MHz or Sleep Mode. The above bits (**OSC48_SEL** and **OSC_MODE**) select the clock named reference clock (ref_clk).

The default after power on reset or exiting STOP Mode or deassertion of **RESET_N** is to use the internal oscillator at 4 MHz. After reset is released (the later of power on reset or external **RESET_N** signal), the Clock and Reset block waits for the oscillator to be stable. The settling times of the oscillator may be changed by writing to the OSC48_SETTLE_CLKS Register. This settling time is also used when the **OSC48_SEL0** bit is reset or **OSC_MODE[1:0]** bits are changed.

In normal functional mode, the oscillator operates in 48 MHz mode, and the firmware can switch from 4 MHz to 48 MHz. This mode is required for accurate timing reference, to operate peripheral blocks such as USB, UART, SPI1, SPI1, and SC1. If the peripheral blocks such as USB, UART, SPI1, SPI2, and SC1 are not enabled, then Low Power Mode may be entered by selecting **OSC_MODE[2:0]**=000b. In this mode, the oscillator output is approximately 4 MHz.

The reference clock is running in 8051 IDLE and STOP modes. If the oscillator source needs to be shutdown in Lower Power Mode, then the firmware must write a one to the **OSC_MODE2** bit.

Note: In the SEC1110 and SEC1210 chips, the 32.768 kHz oscillator is not present.

16.4.2 Oscillator 48 MHz Settle Time Register

Table 16.3 Oscillator 48 MHz Settling time

OSC48_SETTLE_CLKS (0X001~0X001 – RESET=0X0A)			**OSCILLATOR 48MHZ SETTLE TIME REGISTER**
BIT	**NAME**	**R/W**	**DESCRIPTION**
7	DEBOUNCE_CLK_EN	R/W	This bit if set, it enables a 100 kHz or 1 kHz debounce clock.
6	DEBOUNCE_FREQ	R/W	`0` : 1 kHz debounce clock `1` : 100 kHz debounce clock
5	A1_COMPATIBLE	R/W	In the SEC1110/SEC1210 version, this bit is always `0`. In other versions, `0`: indicates the GPIO block runs off cpu_clk, and if the 8051 is in CPU_IDLE state. The GPIO debounce feature would not function, since cpu_clk is gated. `1`: indicates the GPIO block runs off cpu_per_clk. Therefore, if the 8051 is in CPU_IDLE state, the GPIO debounce feature functions normally.
4:0	OSC48_SETTLE_CLKS	R/W	This field indicates the time to wait before the internal oscillator is stable at 48 MHz. Each increment of this field is approximately, 480 * (1/48) = 10 µs, when **OSC48_SEL1** is 0 (48 MHz). The settling time is **OSC48_SETTLE_CLKS** * 10 µs. The default settling time is 100 µs.

The reset value of this register, after the following events, is 0x0A (100 µs for 48 MHz):

- Power on reset, or **RESET_N** release
- Exit from STOP Mode

This value may be changed by firmware to 0x5 (50 µs) before entering low power modes, in which the 48 MHz oscillator is used after a wake-up event.

16.4.3 Oscillator 32 kHz Registers

Table 16.4 Oscillator 32 KHz Clock Control Registers

OSC32KHZ_CTL (0X002~0X002 - RESET=0X00)			OSCILLATOR 32KHZ CONTROL REGISTER
BIT	**NAME**	**R/W**	**DESCRIPTION**
7:4	Reserved	R	Always read as 0
3:2	Reserved	R	Always read as 0
1	Reserved	R	Always read as 0
0	OSC32KHZ_PRESENT	R	Always read as 0

The 32.768 Khz Oscillator can be shutdown under the following conditions:

- When the reference clock (ref_clk) is in 4/8/48 Mhz mode and RTC and LCD are not enabled, and core regulators are not going to be powered down (PWR_CORE_DIS[2:0]=000).
- When the reference clock is in 32.768 Khz mode, then resetting OSC32KHZ_ENABLE powers down this oscillator.
- When reference clock is in 32.768 Khz mode, and any of the PWR_CORE_DIS[2:0] bits are set and OSC32KHZ_ENABLE bit is reset.

16.4.4 Oscillator Test Registers

Table 16.5 Oscillator Test Registers

OSC_TEST_REGS (0X003~0X009) - RESET=0XXX)			OSCILLATOR TEST REGISTER
BIT	**NAME**	**R/W**	**DESCRIPTION**
7:0	Reserved	R/W	These bits are reserved for test and must not be written to. Writes to this register may cause the part to be inoperable.

16.4.5 Memory Clock Divide Register

Table 16.6 Memory Clock Divide Register

MEM_CLK_DIV (0X00A~0X00A – RESET=0X0C)			MEMORY CLOCK DIVIDER REGISTER
BIT	**NAME**	**R/W**	**DESCRIPTION**
7:4	Reserved	R	Always read as 0

© 2013 Microchip Technology Inc.

Table 16.6 Memory Clock Divide Register

3:0	MEM_CLK_DIV[3:0]	R/W	This field indicates the divide factor of the reference clock (48 MHz or 4 MHz), to generate the CPU clock. The Clock and Reset blocks stop the memory clock, and consequently any clock derived from the memory clock. temporarily when this register is written to, and before enabling the clock to the new frequency. A value of zero indicates 16. The default divide factor is 12. mem_clk = ref_clk/MEM_CLK_DIV

The reset value of this register, after the following events is 12:

- Power on reset, or **RESET_N** release
- Exit from STOP Mode

When the 48 MHz (or 4 MHz) oscillator (external or internal) is used, the memory clock frequency is 4 MHz (333.33 kHz). The memory bandwidth of on-chip ERAM is shared by the CPU, and by the peripherals such as USB, SPI1 or UART. The CPU clock is derived from memory clock, and both run at the same frequency after reset. This ensures that the CPU would have zero wait states accessing on-chip ERAM. But if other peripherals such as USB, SPI1 or UART are enabled, then the CPU clock must be lower than the memory clock frequency to avoid wait states to on-chip ERAM.

If the USB block is enabled, then the memory clock frequency must be a minimum 8 MHz. The valid values of **MEM_CLK_DIV** with respect to divide factors of other peripherals is shown in Section 16.6, "Valid Clock Frequencies," on page 208.

Any

Note: In the SEC1110/SEC1210 version, before updating the CPU_CLK_DIV register the MEM_CLK_DIV register should be changed to 2 or higher first followed by writing to the CPU_CLK_DIV register. This is to avoid *Anomaly 4*: writing to the CPU_CLK_DIV register when the MEM_CLK_DIV register is equal to 1 causes the SRAM to malfunction. This anomaly is fixed in later SEC1110/SEC1210 versions.

16.4.6 CPU Clock Divide Register

Table 16.7 CPU Clock Divide Register

CPU_CLK_DIV (0X00B–0X00B RESET=0X01)			**CPU CLOCK DIVIDER REGISTER**
BIT	**NAME**	**R/W**	**DESCRIPTION**
7	Reserved	R	Always read as 0
6	Reserved	R	Always read as 0
5	Reserved	R	Always read as 0
4:2	Reserved	R	Always read as 0
1:0	CPU_CLK_DIV[1:0]	R/W	This field indicates the divide factor of the reference clock(48 MHz or 4 MHz), to generate the CPU clock. The Clock and Reset blocks stop the CPU clock, and the 8051 peripheral clock (clkper) temporarily when this register is written to, and before enabling the clock to the new frequency. The default divide factor is 1. A value of 0 indicates 4. cpu_clk = mem_clk/CPU_CLK_DIV)

The reset value of this register, after the following events is 1:

- Power on reset, or **RESET_N** release
- Exit from STOP Mode

When the 48 MHz oscillator (external or internal) is used, the memory and CPU clock frequencies are 4 MHz. If other peripherals such as USB, SPI1 or UART are enabled, then the CPU clock must be lower than memory clock frequency to avoid wait states to on-chip ERAM.

The Clocks block generates a CPU phase signal with respect to the memory clock. Hence at least one slot of the memory bandwidth is allocated to the CPU. The ERAM memory arbiter uses other slots of memory bandwidth for all peripherals such as USB, SPI1, UART first. The CPU slot is used by the peripherals only in the worst case, when bandwidth is insufficient. The CPU is held in wait if an access occurs at the same time, in such a case.

The valid values of **CPU_CLK_DIV** with respect to divide factors of other peripherals is shown in Table 16.16, “Valid Clock Frequencies,” on page 208.

When reference clock is same as CPU_CLK/MEM_CLK, any change to CPU_CLK_DIV, MEM_CLK_DIV, (SPI1/SPI2/UART/USB/SC1/SC2)_CLK_DIV registers requires 10 CPU clocks to take effect before any peripheral is accessed, or other clock divider register is accessed.

To decrease the mem_clk frequency, then mem_clk_div must be written first and cpu_clk_div second. To increase the mem_clk frequency, then cpu_clk_div needs to be written first, and then mem_clk_div. This will ensure that cpu_clk does not exceed the maximum supported frequency.

The CPU peripheral clock is used by the 8051 CPU and internal peripherals such as Timer 0, Timer 1, Timer 2, WDT, and GPIO blocks. The peripherals UART, SPI1, SPI2 (TraceFIFO), and USB also use the CPU clock for their register interface. However, these peripherals also have separate IO function clocks.

After a reset event (power on reset, STOP Mode, soft resets such as watchdog timeout, or OCDS), the OTP is read to determine the security configuration. Next, the reset to the CPU sub-system is released.

The cpu_clk is gated in 8051 CPU_IDLE Mode, but the internal 8051 peripherals (Timer 0, Timer 1, Timer 2) and GPIO blocks are receiving cpu_clkper.

Both the cpu_clk and cpu_clkper are gated in 8051 CPU_STOP mode. Here the clocks to the external peripherals SPI1, SPI2, UART, USB, SC1, SC2 etc. may have clocks running based on their clock enable bits. An interrupt from these peripherals can wake up the CPU. If the external peripherals also have their clocks disabled, then only an external event from the chip can wake-up the CPU.

This external event could be from GPIO blocks (if enabled) or USB resume.

Note: In SEC1110/SEC1210 version, when writing to the CPU_CLK_DIV register when the MEM_CLK_DIV register is equal to 1, causes the SRAM to malfunction. Before updating the CPU_CLK_DIV register the MEM_CLK_DIV register should be changed to 2 or higher first followed by writing to the CPU_CLK_DIV register. This *Anomaly 4* errata is fixed in later versions.

Note: In SEC1110/SEC1210 silicon, the CPU_CLK_DIV value of 0, indicating divide by 4, must not be used. This *Anomaly 20* errata is fixed in later versions.

© 2013 Microchip Technology Inc.

16.4.7 USB Clock Register

Table 16.8 USB Clock Register

USB_CLK_CTL (0X00C~0X00C – RESET=0X00)			USB CLOCK REGISTER
BIT	**NAME**	**R/W**	**DESCRIPTION**
7	USB_CLK_EN	R/W	When this bit is set, it enables the reference clock (48 MHz if selected) to the USB block. It also supplies a further divide by 4 clock (12 MHz) to the SIE engine. This bit must be enabled for a USB resume condition (normal resume or remote wake-up). The default value is 0. The clocks to the USB block can be halted by resetting this bit, without resetting the USB block (controlled by **USB_RESET**).
6	USB_RESET	R/W	This bit when set, resets the USB SIE block.
5	USB_PHY_SUSPEND	R/W	When this bit is set, it forces the USB PHY to into Suspend Mode. This bit may be used to reduce power consumption of the PHY, if USB is not used. This bit is absent in SEC1110/SEC1210 but is present in later versions.
4:0	Reserved	R	Always read as 0

The USB must be enabled by firmware only when the 48 MHz oscillator (external or internal) is used (**OSC_MODE**=010b and **OSC48_SEL**=00b or 01b).

The firmware need not reset the **USB_CLK_EN** bit, before entering USB suspend.The hardware shuts off the USB clocks automatically when **PWR_CORE_DIS0** is set. In this case, on resumption from USB suspend, as detected by the Wake on Event registers, the hardware would re-enable the USB clocks to continue USB operations.

16.4.8 UART Clock Register

Table 16.9 UART Clock Register

UART_CLK_DIV (0X00D~0X00D – RESET=0X01)			UART CLOCK DIVIDER REGISTER
BIT	**NAME**	**R/W**	**DESCRIPTION**
7	UART_CLK_EN	R/W	When this bit is set, it enables the reference clock after division by **UART_CLK_DIV** to the USB block. The default value is 0. The clocks to the UART block can be halted by resetting this bit, without resetting the UART block (controlled by **UART_RESET**).
6	UART_RESET	R/W	When this bit is set, it resets the UART block.
5:0	UART_CLK_DIV	R/W	This field indicates the division factor to reference clock (48 MHz if selected), to generate uart_clk. The frequency however must be a multiple of the cpu_clk frequency, which is enforced by software. The default value is 1. uart_clk = ref_clk/UART_CLK_DIV, with the constraint MEM_CLK_DIV * CPU_CLK_DIV = UART_CLK_DIV * U, where U is an integer.

The frequency selected for the UART block depends on the maximum baud rate desired. For low baud rates such as 9600, and 19200 a UART clock frequency of 4 MHz (cpu_clk) is sufficient. But for higher baud rates, the UART clock frequency must be 16 MHz or higher.

In Clock Bypass Mode (i.e., ref_clk = mem_clk = clk_clk since **MEM_CLK_DIV**=1 and **CPU_CLK_DIV**=1), any write to enable the USB_CLK_DIV Register would require 10 CPU clocks for the UART clocks to be enabled again, after **UART_RESET** is reset or **UART_CLK_EN** is set. Hence, the UART block must not be accessed during this time.

16.4.9 SPI1 Clock Register

Table 16.10 SPI1 Clock Register

SPI1_CLK_DIV (0X00E~0X00E – RESET=0X01)			**SPI1 CLOCK DIVIDER REGISTER**
BIT	**NAME**	**R/W**	**DESCRIPTION**
7	SPI1_CLK_EN	R/W	When this bit is set, it enables the reference clock after division by **SPI1_CLK_DIV** to the SPI1 block. The default value is 0. The clocks to the SPI1 block can be halted by resetting this bit, without resetting the SPI1 block (controlled by **SPI1_RESET**).
6	SPI1_RESET	R/W	When this bit is set, it resets the SPI1 block.
5:0	SPI1_CLK_DIV	R/W	This field indicates the division factor to reference clock (48 MHz if selected), to generate the spi1_clk. The frequency, however, must be a multiple of the cpu_clk frequency, which is enforced by software. The default value is 1. spi1_clk = ref_clk/SPI1_CLK_DIV, with the constraint MEM_CLK_DIV * CPU_CLK_DIV = SPI1_CLK_DIV * SP1, where SP1 is an integer.

The SPI1 port is the functional Master/Slave SPI interface. The frequency selected for the SPI1 block depends on the maximum baud rate desired.The SPI1 baud rate maximum is half the spi1_clk frequency. For low baud rates a SPI1 clock frequency of 4 MHz is sufficient. But for higher baud rates, the SPI1 clock frequency must be higher.

In Clock Bypass Mode (i.e., ref_clk = mem_clk = clk_clk since **MEM_CLK_DIV**=1 and **CPU_CLK_DIV**=1), any write to enable the SPI1_CLK_DIV Register would require 10 CPU clocks for the SPI1 clocks to be enabled again, after **SPI1_RESET** is reset or **SPI1_CLK_EN** is set. Hence the SPI1 block must not be accessed during this time.

16.4.10 SPI2 Clock Register

Table 16.11 SPI2 Clock Register

SPI2_CLK_DIV (0X00F~0X00F – RESET=0X0C/0X8C/ 0X01/0X81)			**SPI1 CLOCK DIVIDER REGISTER**
BIT	**NAME**	**R/W**	**DESCRIPTION**

© 2013 Microchip Technology Inc.

Table 16.11 SPI2 Clock Register

7	SPI2_CLK_EN	R/W	When this bit is set, it enables the reference clock after division by **SPI2_CLK_DIV** to the SPI2 block. The default value is 0. The default is 1 if configured to execute out of External SPI as indicated in Table 7.1 "Code Execution Truth Table" on page 35 This occurs if **BOND2** pin is high in Debug package. The clocks to the SPI2 block can be halted by resetting this bit, without resetting the SPI2 block (controlled by SPI2_RESET).
6	SPI2_RESET	R/W	When this bit is set, it resets the SPI2 block.
5:0	SPI2_CLK_DIV	R/W	This field indicates the division factor to reference clock (48 MHz if selected), to generate spi2_clk. The frequency however must be a multiple of the cpu_clk frequency, which is enforced by software. The default value is 1. uart_clk = ref_clk/SPI2_CLK_DIV, with the constraint MEM_CLK_DIV * CPU_CLK_DIV = SPI2_CLK_DIV * SP2, where SP2 is an integer. If **EXT_SPI_EN** (**BOND2**) is high, then the reset value of this field is 12, otherwise the reset value is 1.

The SPI2 port is the Master SPI interface for external program space execution and instrumentation trace used in Debug Mode. The frequency selected for the SPI1 block depends on the maximum baud rate desired. For low baud rates a SPI2 clock frequency of 4 MHz is sufficient. But for higher baud rates, the SPI2 clock frequency must be higher.

In Clock Bypass Mode (i.e., ref_clk = mem_clk = clk_clk since **MEM_CLK_DIV**=1 and **CPU_CLK_DIV**=1), any write to enable the SPI2_CLK_DIV Register would require 10 CPU clocks for the SPI2 clocks to be enabled again, after **SPI1_RESET** is reset or **SPI1_CLK_EN** is set. Hence the SPI2 block must not be accessed during this time.

16.4.11 Smart Card1 Clock Register

Table 16.12 SC1 Clock Register

SC1_CLK_DIV (0X010~0X010 – RESET=0X01)			**SC1 CLOCK DIVIDER REGISTER**
BIT	**NAME**	**R/W**	**DESCRIPTION**
7	SC1_CLK_EN	R/W	When this bit is set, it enables the reference clock after division by **SC1_CLK_DIV** to the Smart Card 1 block. The default value is 0. The clocks to the SC1 block can be halted by resetting this bit, without resetting the SC1 block (controlled by **SC1_RESET**).
6	SC1_RESET	R/W	When this bit is set, it resets the SC1 block.
5:0	SC1_CLK_DIV	R/W	This field indicates the division factor to reference clock (48 MHz if selected), to generate sc1_clk. The default value is 1. sc1_clk = ref_clk/SC1_CLK_DIV, with the constraint MEM_CLK_DIV * CPU_CLK_DIV = SC1_CLK_DIV * SC1, where SC1 is an integer.

The frequency selected for the SC1 block depends on the maximum baud rate desired. The SCC block has the ability to divide this clock generated by the values in the SC_DLL/SC_DLM registers and the SC_CLK_DIV Register to generate the etu. Hence this clock divider is to select the lowest frequency to the block to reduce dynamic power.

The SC1 clock frequency selected must a integer multiple of the CPU clock. For example, if the Smart Card must operate at 16 MHz, the CPU clock is also at 4 MHz or 8 MHz, or if the Smart Card operates at 24 MHz, the CPU clock is also at 4.8 MHz.

The **SC1_CLK_EN** bit must be enabled to write to the **SC1_SC_FIFO_DIS** bit in the Smart Card 1 registers.

In Clock Bypass Mode (i.e., ref_clk = mem_clk = clk_clk since **MEM_CLK_DIV**=1 and **CPU_CLK_DIV**=1), any write to enable the SC1_CLK_DIV Register would require 10 CPU clocks for the SC1 clocks to be enabled again, after **SC1_RESET** is reset or **SC1_CLK_EN** is set. Hence, the SC1 block must not be accessed during this time.

16.4.12 Smart Card2 Clock Register

This register is valid only in the SEC1110. It is read only for the SEC1210.

Table 16.13 SC2 Clock Register

SC2_CLK_DIV (0X011~0X011 – RESET=0X01)			**SC2 CLOCK DIVIDER REGISTER**
BIT	**NAME**	**R/W**	**DESCRIPTION**
7	SC2_CLK_EN	R/W	When this bit is set, it enables the reference clock after division by **SC_CLK_DIV** to the Smart Card 2 block. The default value is 0. The clocks to the SC2 block can be halted by resetting this bit, without resetting the SC2 block (controlled by **SC2_RESET**).
6	SC2_RESET	R/W	This bit when set, resets the SC2 block.
5:0	SC2_CLK_DIV	R/W	This field indicates the division factor to reference clock (48 MHz if selected), to generate sc1_clk or sc2_clk. The default value is 1. sc1_clk = ref_clk/SC1_CLK_DIV, with the constraint MEM_CLK_DIV * CPU_CLK_DIV = SC1_CLK_DIV * SC1, where SC1 is an integer.

The frequency selected for the SC2 block depends on the maximum baud rate desired. The SCC block has the ability to divide this clock generated by the values in SC_DLL/SC_DLM and SC_CLK_DIV registers to generate the “etu”. Hence this clock divider is to select the lowest frequency to the block to reduce dynamic power.

The SC2 clock frequency selected must a integer multiple of the CPU clock. For example, if Smart Card must operate at 16 MHz, the CPU clocks is also at 4 MHz or 8 MHz, or if the Smart Card operates at 4.8 MHz, the CPU clock is also at 4.8 MHz or 9.6 MHz. Though there are 2 Smart Card interfaces, they share the same UART, and only one of them is in operation at any point of time.

Though there are 2 Smart Card interfaces, they share the same SC_FIFO, and only one of them is in operation at any point of time for data transfer. But both blocks may be active at the same time, and may be operating at different baud rates. But both the Smart Card clocks must be a multiple of CPU clock. For example, if each operate at 4.8 MHz and 4 MHz, then 48 MHz clock is routed to both blocks (SC1_CLK_DIV=1, SC2_CLK_DIV=1).

In Clock Bypass Mode (i.e., ref_clk = mem_clk = clk_clk since MEM_CLK_DIV=1, CPU_CLK_DIV=1), any write to enable SC2_CLK_DIV register would require 10 CPU clocks for the SC2 clocks to be enabled again, after SC1_RESET is reset or SC1_CLK_EN is set. Hence the SC2 block must not be accessed during this time.

© 2013 Microchip Technology Inc.

16.5 Wake On Event Register

Table 16.14 Wake on Event Register

WOE_CTL (0X012~0X012 – RESET=0X00)			WAKEON EVENT REGISTER
BIT	**NAME**	**R/W**	**DESCRIPTION**
7:6	Reserved	R	Always read as 0
5	PWR_STS_WOE_MSK	R/W	Always read as 0 in SEC1110/SEC1210. Setting this bit enables waking up on a power status event.
4	Reserved	R/W	Always read as 0
3	Reserved	R	Always read as 0
2	Reserved	R	Always read as 0
1	USB_WOE_MASK	R/W	Setting this bit enables waking up the oscillator (enabling the reference clock) from power down state due to USB resume. Resetting this bit disables wake-up on USB resume.
0	GPIO_WOE_MSK	R/W	Setting this bit enables waking up the oscillator (enabling the reference clock) from power down state due to a GPIO event. Resetting this bit disables wake-up on a GPIO event. The GPIO registers must be enabled to detect a pad change. **Note:**

Table 16.15 Wake on Event Status Register

WOE_STS (0X013~0X013 – RESET=0X00)			WAKEON EVENT STATUS REGISTER
BIT	**NAME**	**R/W**	**DESCRIPTION**
7:6	Reserved	R	Always read as 0
5	PWR_STS_WOE	R/W	Always read as 0 in SEC1110/SEC1210. This bit is set on waking up on a power status event.
4	Reserved	R/W	Always read as 0
3	Reserved	R	Always read as 0
2	Reserved	R	Always read as 0 The firmware writes a 1 to reset it.
1	USB_WOE	R/W1	Hardware sets this bit on USB resume. The firmware writes a 1 to reset it.
0	GPIO_WOE	R/W1	Hardware sets this bit on GPIO event. The firmware writes a 1 to reset it.

16.6 Valid Clock Frequencies

Table 16.16 Valid Clock Frequencies

INDEX	REF	MEM	CPU	SPI1	SPI2	UART	USB (SIE)	SC1	SC2	COMMENT
1	48	4	MEM	SP1 * CPU	SP2 * CPU	U * CPU	-	SC1 * CPU (4)	SC2 * CPU (4)	USB, a multiple of CPU
2	48	8	MEM	SP1 * CPU	SP2 * CPU	U * CPU	12	SC1 * CPU (4)	SC2 * CPU (4)	
4	48	4.8	MEM	SP1 * CPU	SP2 * CPU	U * CPU	-	SC1 * CPU (4.8)	SC2 * CPU (4.8)	USB, not a multiple of CPU
5	48	9.6	MEM	SP1 * CPU	SP2 * CPU	U * CPU	12	SC1 * CPU (4.8)	SC2 * CPU (4.8)	
6	48	9.6	MEM/ 2	SP1 * CPU	SP2 * CPU	U * CPU	12	SC1 * CPU (4.8)	SC2 * CPU (4.8)	
7	4	REF	MEM	CPU	CPU	CPU	-			Low Power mode

If an interface is not used, its clock can be disabled and that cell is left blank. All frequencies are in MHz unless otherwise stated.

- SP1 is an integer such that the SPI1 clock frequency is a multiple of the CPU frequency.
- SP2 is an integer such that the SPI2 clock frequency is a multiple of the CPU frequency.
- U is an integer such that the UART clock frequency is a multiple of the CPU frequency.
- Only one Smart Card can be in use at any time. Its frequency is a multiple of the CPU frequency.
- The Memory clock frequency must be 8 Mhz or higher if USB is used. The 48 MHz oscillator mode is required for USB operation.

There are 3 examples clock generation shown in Figure 16.2 on page 209, Figure 16.3 on page 210, and Figure 16.4 on page 211.

© 2013 Microchip Technology Inc.

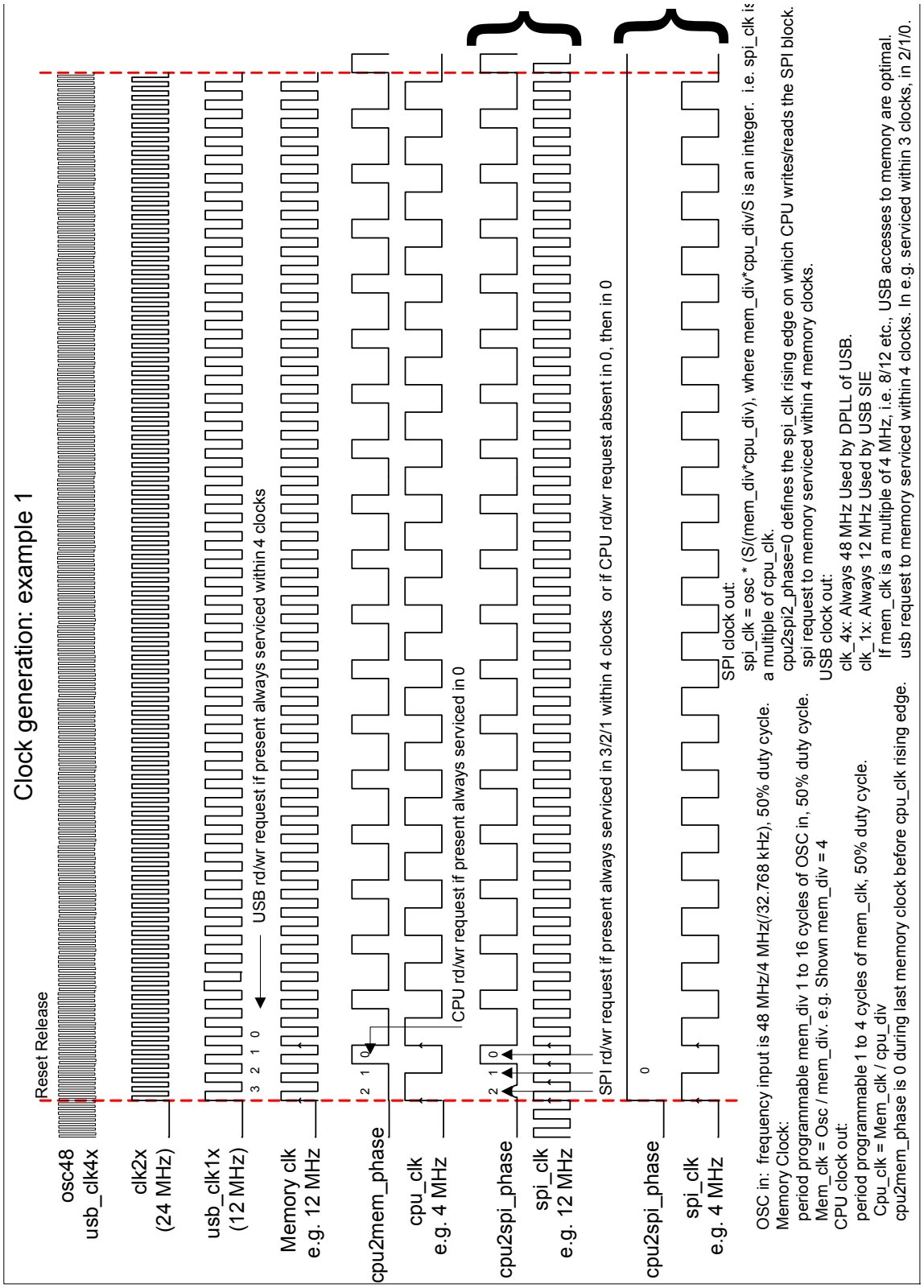

Figure 16.2 Clock Generation Example 1

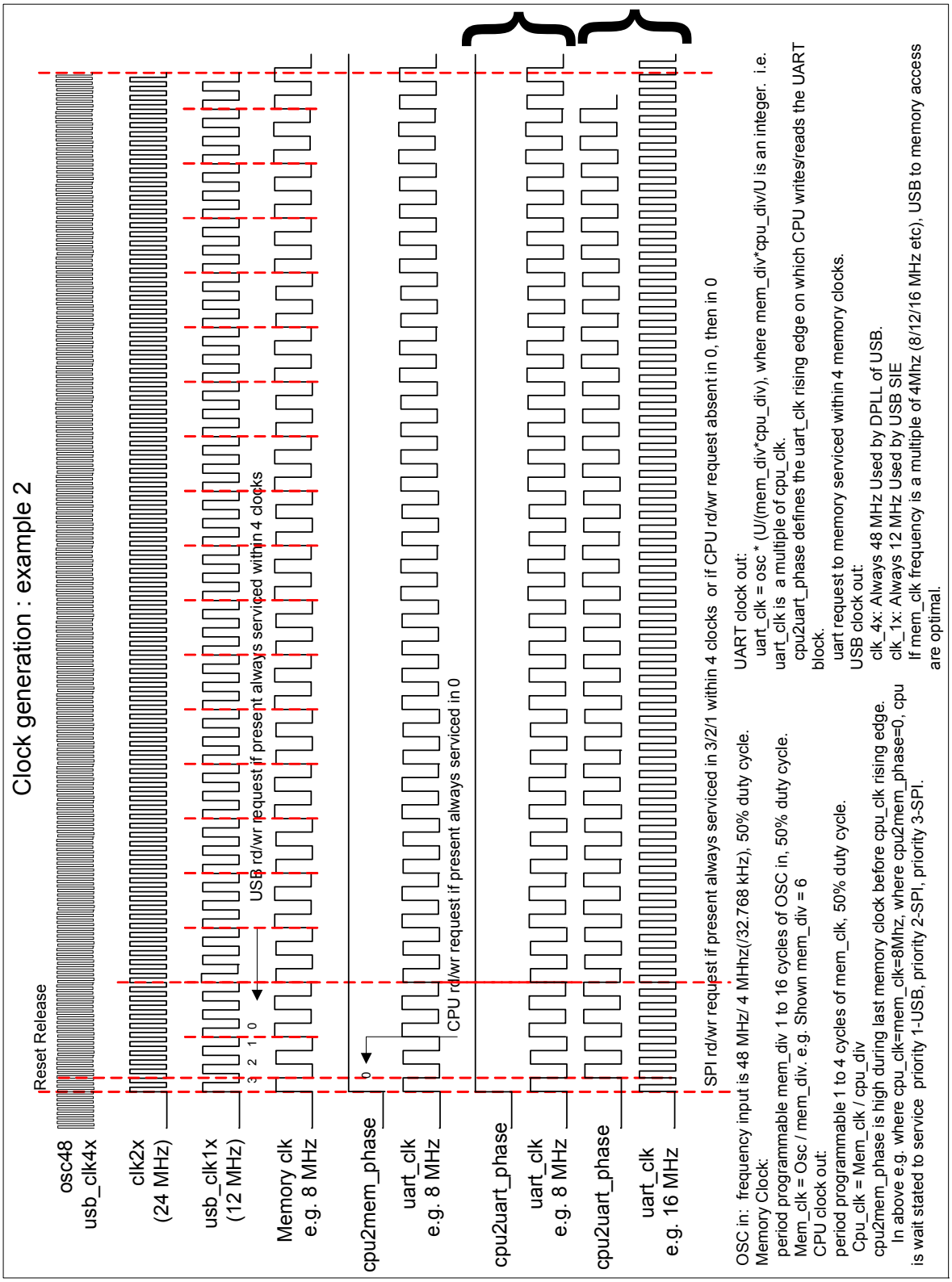

Figure 16.3 Clock Generation Example 2

© 2013 Microchip Technology Inc.

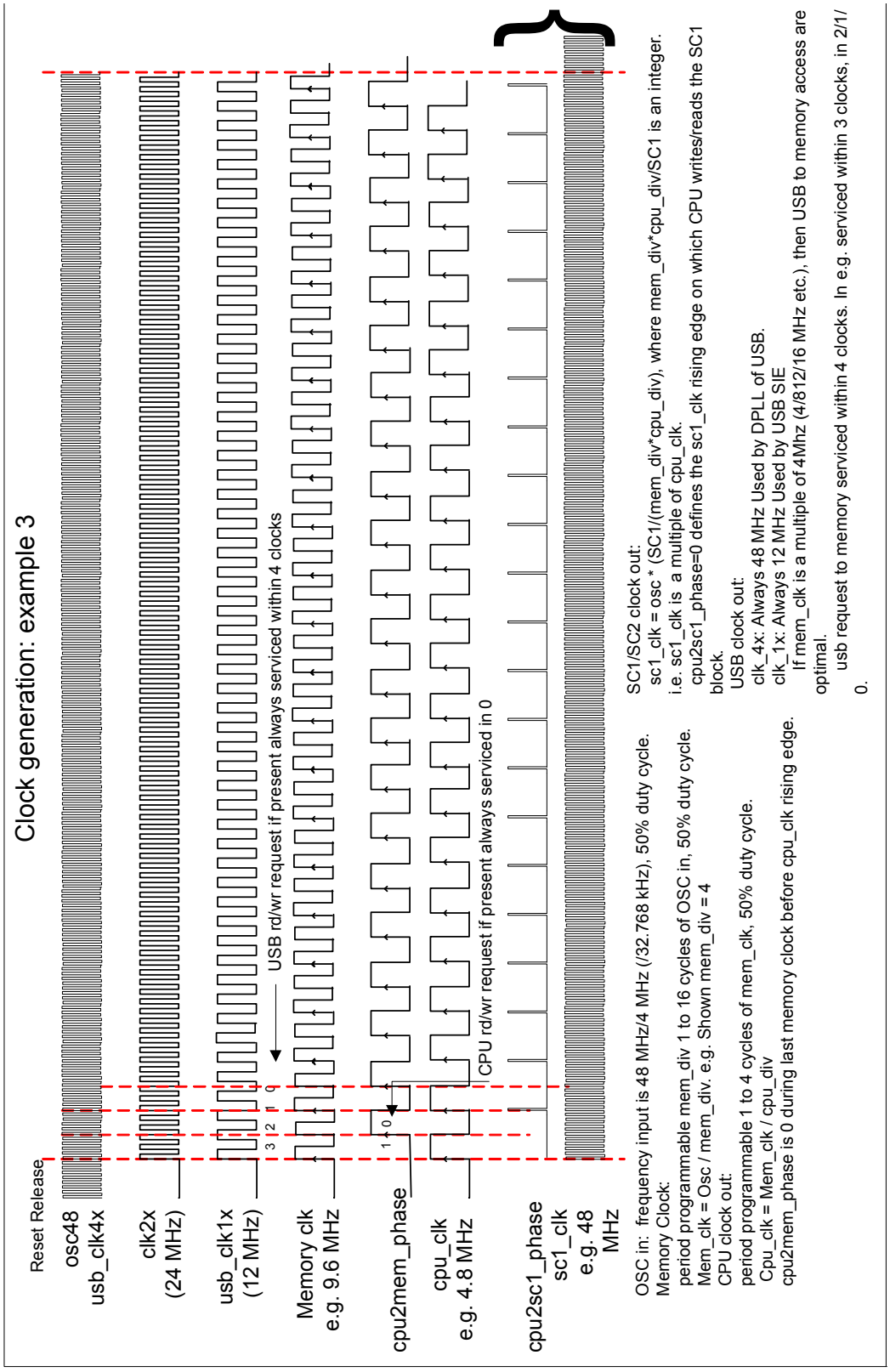

Figure 16.4 Clock Generation Example 3

16.7 Power

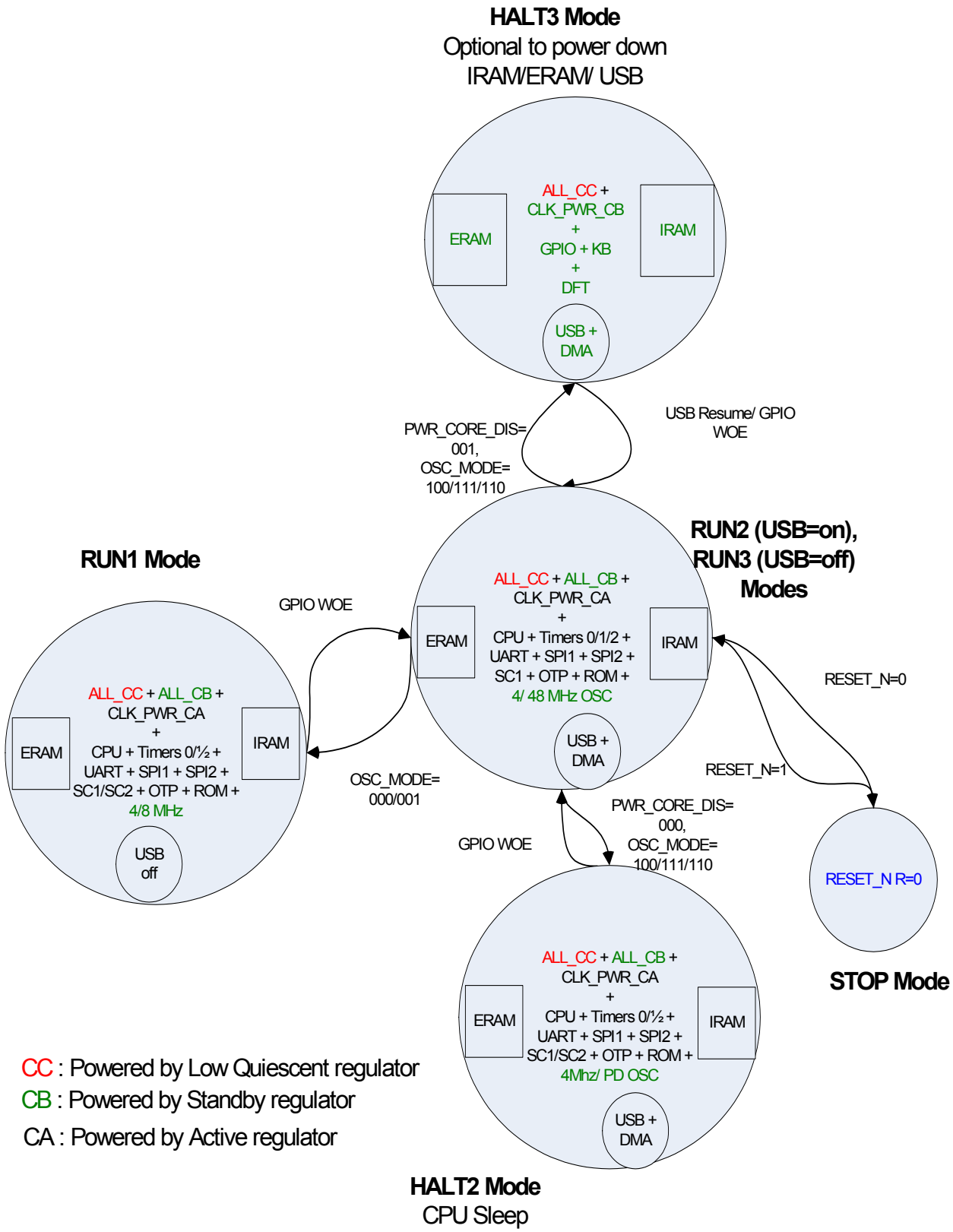

© 2013 Microchip Technology Inc.

Figure 16.5 SEC1110/SEC1210 Power States

16.7.1 CPU Sleep/Power Management

The R8051XC2 has a power management control unit that generates clock enable signals for the main CPU and for peripherals. This unit has two Power Down Modes: IDLE and STOP. It also generates an internal synchronous reset signal (upon external reset, watchdog timer overflow, or software reset condition, OCDS). The IDLE Mode leaves the clock of the internal peripherals running. Any interrupt will wake the CPU.

The CPU sleep modes may be entered in any of the RUN power states.

16.7.1.1 CPU_IDLE Mode

Setting the **idle** bit of the Power Control Register invokes the IDLE Mode. In the IDLE Mode, the clock for some peripherals (Timer 0, Timer 1, WDT, interrupt controller, reset, and wake-up units) is running (the clkper_en=1 and clkcpu_en=0). Dynamic power consumption drops because the CPU clock is stopped.

The CPU can exit the IDLE state with any interrupt or reset.

16.7.1.2 CPU_STOP Mode

The STOP Mode turns off both internal clocks: clk_cpu and clk_per. The CPU will exit this state when an External Interrupt 0 (reserved) or External Interrupt 1 (GPIO) occurs, or a reset occurs. Internally generated interrupts are disabled since they require clock activity. Dynamic Power consumption drops further compared to IDLE Mode.

The CLK_PWR block is active, with oscillators up and running. Also, the peripherals such as SPI1, SPI2, SC1, SC2, and UART may be running if they where enabled. The memory clock to the XDATA SRAM is also up.

The Wake-up from Power-Down Mode Control Unit services External Interrupt 0 (all interrupts except GPIOs) or External Interrupt 1 (GPIO0,1, or 2 interrupts) during power-down modes. They can combinationally force the clock enable outputs back to active state so that the clock generation can be resumed.

16.7.2 Power States

16.7.2.1 STOP Mode

This mode is entered when the chip is powered, and the external signal **RESET_N** is low. Entering this mode disables all the voltage regulators for the core and all IO rails. The amount of power consumed is at its least while in this state. The IO pads, GPIO, USB, and Smart Card pads are in high impedance mode (no power), but the pad inputs are 5 V tolerant.

The typical use is **RESET_N** signal being asserted when a system is in low power mode The **RESET_N** is released only when the Host requires an interface to the Smart Card.

When **RESET_N** is released, the chip powers up and enters RUN1 Mode (Section 16.7.2.3).

16.7.2.2 HALT Mode

The HALT modes are entered only from RUN2/ RUN3 modes.

In this Mode, the software disables the clock to all peripherals such as SPI1, SPI2, UART, SC1, and SC2. If this mode was entered due to USB suspend, then the USB clock is disabled. The software must enable the Wake on Event Register (USB/GPIO) before entering this mode.

The software enters this mode by setting the PWR_CORE_DIS bits and **OSC_MODE[2]** bit, which causes the oscillator to be powered down. Now all main clocks in the core power domain are off, and the chip is in low power state.

In order to meet the 200uA USB suspend limit, there are two core power domains. In CoreB (Standby) domain the CLK_PWR, UDC, XDATA ERAM, and IRAM are powered. All other core logic is powered down.

Only a wake-up event such as a USB Resume, GPIO event, or Reset event would cause the chip to exit this state to RUN modes.

The 3.3 V core power to GPIOs and the USB transceiver is enabled.

16.7.2.3 RUN1 Mode

This mode is entered after a power on reset event, or when the software operates the oscillator in Low Power Mode, where the internal oscillator runs at 4 MHz. The dynamic power consumption is low, and it depends on which peripherals are enabled, such as SPI1 (SPI2 in Debug Mode), or UART.

The peripherals such as USB, and SC1, and SC2 require accurate frequency generation, and must not be enabled in the RUN1 Mode.

16.7.2.4 RUN2 Mode

This mode is entered when the software operates the oscillator in normal mode, where the internal oscillator runs at 48 MHz. The dynamic power consumption is high, and it depends on which peripherals are enabled, such as SPI1 (SPI2 in Debug Mode), UART, USB, SC1, and SC2. The USB is not configured and disabled.

The difference between RUN2 and RUN3 modes, is that in RUN2 mode, the USB is off. Hence if operating the Smart Card blocks at lower baud rate, then 48 Mhz oscillator is not required, and reference clock could be at 4.

If Smart Card 1 (or Smart Card 2) is to be enabled, then the variable voltage regulators LDO2A, (or LDO2B) is enabled.

The software can enter lower power states such as RUN1, or HALT states, by changing the **OSC_MODE[2:0]** bits. The software must turn off power supplies to **SC1_VCC** and **SC2_VCC** before going to low power modes.

The chip may enter this mode from RUN1 Mode by changing the **OSC_MODE[2:0]** bits to 010b and **OSC48_SEL[1]** to 0b.

16.7.2.5 RUN3 Mode

This mode is entered when the software operates the Oscillator in normal mode, where the internal oscillator runs at 4 or 48 Mhz. The dynamic power consumption is higher, and it depends on which peripherals are enabled, such as SPI1 (SPI2 in debug mode), UART, USB, SC1, SC2.

If Smart Card 1 (or Smart Card 2)is to be enabled, then Variable voltage regulators LDO2A (or LDO2B) is enabled.

The Software can enter lower power states such as RUN1, or HALT states, by changing the PWR_CORE_DIS[2:0] and OSC_MODE[2:0] bits. The software must turn off power supplies to SC1_VCC and SC2_VCC before going to low power modes.

The chip may enter this mode from RUN1 mode by changing the OSC_MODE[2:0] bits to ‘b010 and OSC48_SEL[1] to ‘b0.

© 2013 Microchip Technology Inc.

When **RESET_N** is low, all the regulators are in Power Down Mode. When **RESET_N** is released high, all the core voltage and 3.3 V IO voltage rails are powered up.

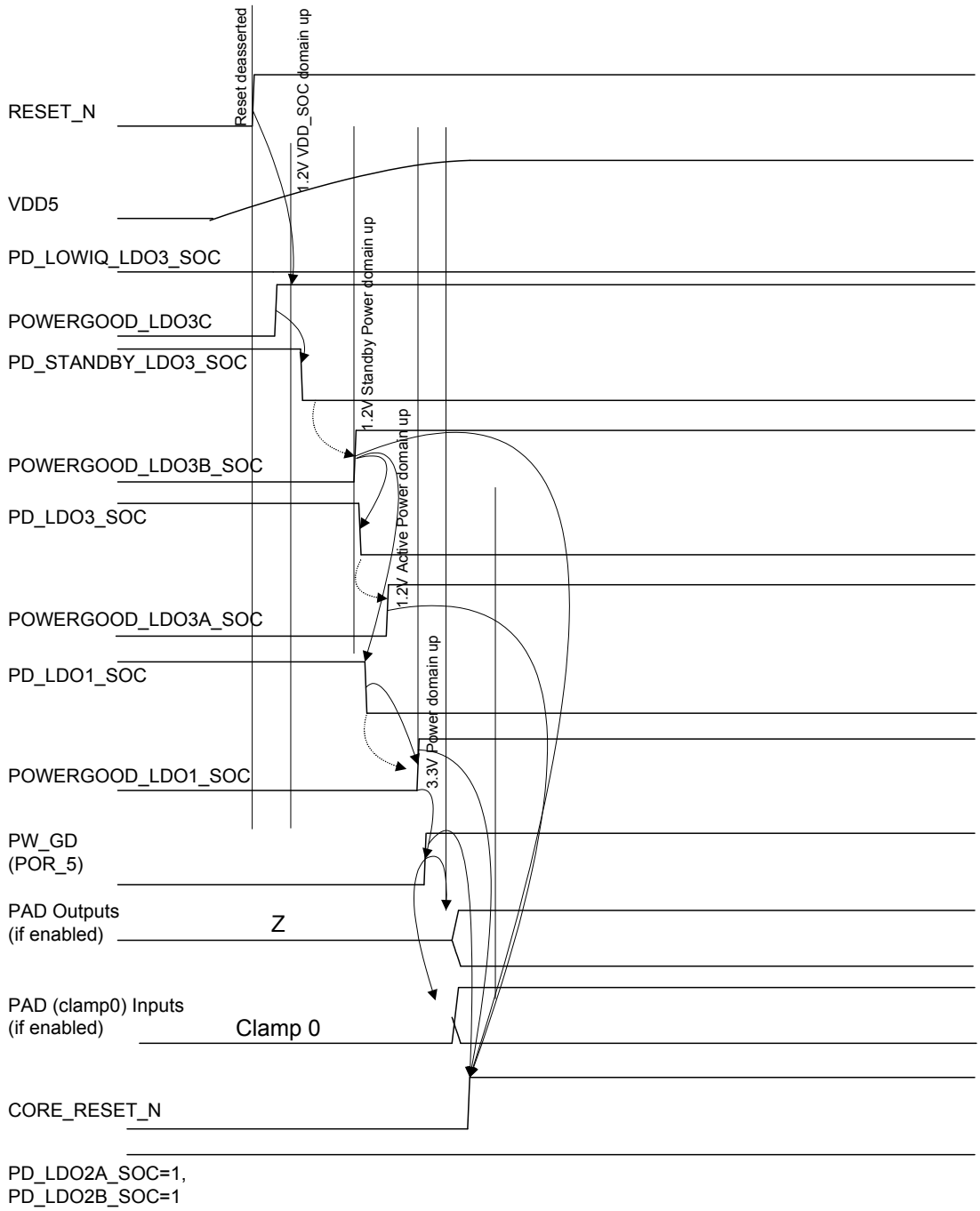

Figure 16.6 Power-on Sequencing

The power up state of internal voltage regulators is shown below.

16.7.3 Power Status Registers

If any bit changes in this register, then it causes a Power Status Event Interrupt.

Table 16.17 Power Status1 Register

POWER_STS1 (0X014 – RESET=001000XXB)			POWER STATUS1 REGISTER
BYTE	**NAME**	**R/W**	**DESCRIPTION**
7	POWERGOOD_LDO2A	R	If this bit is high, it indicates that **SC2_VCC** power is stable (100%). It is low if the voltage drops below 85% of rated value. If the SC2 smart card is in operation and this bit becomes low, it indicates that SC2_VCC current limit has been reached, probably due to a short circuit.
6	POWERGOOD_LDO2B	R	If this bit is high, it indicates that **SC1_VCC** power is stable (100%). It is low if the voltage drops below 85% of rated value. If the SC1 smart card is in operation and this bit becomes low, it indicates that SC1_VCC current limit has been reached, probably due to a short circuit.
5	POWERGOOD_LDO1	R	If this bit is high, it indicates that LDO1 3.3 V power is stable (100%). It is low if the voltage drops below 85% of rated value.
4	Reserved	R	Reserved
3	SC2_VCC_OCS	R	This bit is normally zero. If this bit is set, it indicates that the short circuit current exceeded the limits for **SC2_VCC**. If the LDO2A regulator is powered on, and POWERGOOD_LDO2A is never high because of excess short circuit current, then this bit is set.This bit is reset when software reads this register.
2	SC1_VCC_OCS	R	This bit is normally zero. If this bit is set, it indicates that the short circuit current excessed the limits for **SC1_VCC**. If the LDO2B regulator is powered on, and POWERGOOD_LDO2B is never high because of excess short circuit current, then this bit is set. This bit is reset when software reads this register.
1	VDD5_LOW	RO	This bit is set when the VDD5 power supply voltage drops below 4.8V, indicating the Smart Card cannot be operated as a Class A terminal. This bit is zero, when the VDD5 power is above 4.9V. The VDD5 comparator has a 100mV hysteresis. T
0	Reserved	R	This bit is low when VDD5 is powered. This bit is always low in since the only power source is VDD5.

Table 16.18 Power Status2 Register

POWER_STS2 (0X017 – RESET=000XX11XB)			POWER STATUS2 REGISTER
BYTE	**NAME**	**R/W**	**DESCRIPTION**
7	SC2_VCC_PWR_OVRR	R/W	When this bit is set to 1, it allows powering up of the SC2 pads with PWR_SC2_EN bits i.e., the SC register bit **CARD2_VCC_CNTL** need not be configured to power the SC2 pads.

© 2013 Microchip Technology Inc.

Table 16.18 Power Status2 Register (continued)

6:3	Reserved	R	Always read as 0
2	POWERGOOD_LDO3B	R	If this bit is high, it indicates that the Core 1.2 V standby power is stable. It is low if the voltage drops below 85% of rated value.
1	POWERGOOD_LDO3A	R	If this bit is high, it indicates that the Core 1.2 V power is stable. It is low if the voltage drops below 85% of rated value.
0	VDD5_LOW_3P5	R	This bit if high indicates that the VDD5 power supply is less than 3.5V. This bit if low, indicates that the VDD5 power supply is more than 3.5V.

16.7.4 Power Control 1 Register

These register bits control the power supply to the IO pads of the chip, except for the 3.3 V pads.

Table 16.19 Power Control 1 Register

POWER_CTL1 (0X015 – RESET=0X00)			**POWER CONTROL1 REGISTER**
BYTE	**NAME**	**R/W**	**DESCRIPTION**
7	SC2_CLK_SLEW_RATE	R/W	Always read as 0 in the SEC1110/SEC1210 version. If this bit is set, it causes the Smart Card pads to operate normally, i.e., the rise and fall times are within 8% of 4.8 MHz, even with large capacitive loads (85 pF). If this bit is reset, it reduces the slew rate of the **SC2_CLK** pad to 33% slew rate of normal operation. This feature enables software to reduce the edge rate of the **SC2_CLK** pad when the load capacitance is normal (around 30 pF), by setting this bit.
6	Reserved	R	Always read as 0
5	Reserved	R	Always read as 0
4	SC1_CLK_SLEW_RATE	R/W	Always read as 0 in the SEC1110/SEC1210 version. If this bit is set, it causes the Smart Card pads to operate normally, i.e., the rise and fall times are within 8% of 4.8 MHz, even with large capacitive loads (85 pF). If this bit is reset, it reduces the slew rate of the **SC1_CLK** pad to 33% slew rate of normal operation. This feature enables software to reduce the edge rate of the **SC1_CLK** pad when load capacitance is normal (around 30 pF), by setting this bit.
3:2	PWR_SC2_EN	R/W	This register controls the voltage regulator for the Smart Card 2 pads, if the **PWR_SC2_EN33** bit is zero. This is applicable only to the SEC1210. Otherwise this field is read only. `00` : **SC2_VCC** is powered down. `01` : **SC2_VCC** supplies 5.0 V (Class A) `10` : **SC2_VCC** supplies 3.0 V (Class B) `11` : **SC2_VCC** supplies 1.8 V (Class C). The **VCC_CNTL** bit in the Smart Card 2 SC_Sync_ALL Register must be set to enable the **PWR_SC2_EN** values to control the voltage regulator. If **VCC_CNTL** is reset, then it is equivalent to 00b setting.

Table 16.19 Power Control 1 Register

1:0	PWR_SC1_EN	R/W	This register controls the voltage regulator for the Smart Card 1 pads, if **PWR_SC1_EN33** bit is zero. 00 : **SC1_VCC** is powered down. 01 : **SC1_VCC** supplies 5.0 V (Class A) 10 : **SC1_VCC** supplies 3.0 V (Class B) 11 : **SC1_VCC** supplies 1.8 V (Class C). The **VCC_CNTL** bit in the Smart Card 1 SC_Sync_ALL Register must be set to enable **PWR_SC1_EN** values to control the voltage regulator. If **VCC_CNTL** is reset, then it is equivalent to 00b setting.

The **PWR_SC1_EN** bit controls the power to all the Smart Card 1 pins, namely **SC1_CLK**, **SC1_IO**, **SC1_RST_N**, **SC1_C4**, and **SC1_C8**.

The Power Control 2 Register controls the power supply to the core logic of the chip, and the power to the 3.3 V pads.

Table 16.20 Power Control 2 Register

POWER_CTL2 (0X016 – RESET=0X00)			**POWER CONTROL2 REGISTER**
BYTE	**NAME**	**R/W**	**DESCRIPTION**
7	PWR_SC1_EN33	R/W	If this bit is high, it indicates that the **SC1_VCC** supplies 3.3 V. If this bit is low, it allows the **PWR_SC1_EN** bit to control **SC1_VCC** power.
6	PWR_SC2_EN33	R/W	If this bit is high, it indicates that **SC2_VCC** supplies 3.3 V. This bit if low, allows **PWR_SC2_EN** bit to control **SC2_VCC** power.
5	PWR_VDD33_DIS	R/W	This field indicates whether the power to the pads using VDD33 is disabled in low power modes. 0 : Power to VDD3 pads is enabled. 1 : Power to VDD3 pads is disabled. Note that PWR_CORE_DIS[1] also must also be 1 for 3.3 V pads to be disabled.
4	SC1_VCC_PWR_OVRRD	R/W	Always read as 0 in SEC1110/SEC1210 version. If this bit is set, the LDO2B regulator can be controlled directly by the PWR_SC1_EN register bits. If this bit is cleared, the Smart Card controller bits control the LDO2B regulator.
3	PWR_RAMS_DIS	R/W	This field indicates whether the power to the RAMs in the core logic is disabled in low power modes. 0 : Power to all RAM blocks is enabled. 1 : Power to the IRAM, ERAM blocks is disabled. A write to this field only takes affect after a consecutive write to the OSC48_CTL register.
2:0	PWR_CORE_DIS[2:0]	R/W	This field indicates whether the power to the core logic is disabled in low power modes. 000 : Power to all core blocks is enabled. Bit 0 : Controls power disable to voltage regulator LDO3A which supplies power to most of the core logic except the USB core, and some parts of CLK_PWR block. Bit 1 : Reserved. Bit 2 : Reserved. A write to this field only takes effect after a consecutive write to the OSC48_CTL register.

The PWR_SC2_EN bit controls the power to the Smart Card 2 pins, namely **SC2_CLK**, **SC2_IO**, and **SC2_RST_N**.

© 2013 Microchip Technology Inc.

To enter low power modes, a write to PWR_STOP_MODE bit in PWR_CNTL1 register or a write to PWR_CORE_DIS[2:0], PWR_RAMS_DIS and PWR_VDD33_DIS bits in PWR_CNTL2 register should be followed by a write to OSC48_CTL register to take effect. Any writes to other bits of PWR_CNTL1 and PWR_CNTL2 registers are ignored for this "two consecutive writes" rule. The hardware needs approximately 300 CPU clocks to enter the low power states.

16.8 One Time Programmable ROM Configuration

This OTP Configuration Register is read only and is updated every time before reset release to the 8051 CPU. It captures the first byte of Table 16.21, “One Time Programmable Configuration Register,” on page 219. Since the initial unprogrammed state of the OTP special registers is all zeroes, this register powers up as zero.

Table 16.21 One Time Programmable Configuration Register

OTP_CFG (0X18 - RESET=0X00)			**OTP CONFIG REGISTER**
BYTE	**NAME**	**R/W**	**DESCRIPTION**
7	FORCE_OTP_ROM	R	1 : Forces execution out of the OTP ROM irrespective of the **BOND2** value. 0 : Execute out of ROM or OTP_ROM, or external SPI2 depending on Table 7.1, “Code Execution Truth Table,” on page 35.
6	OTP_ROM_EN	R	1 : Forces execution out of the OTP ROM if **BOND2** (i.e., EXT_SPI2_EN) is zero. 0 : Execute out of ROM, or external SPI2 depending on **BOND2**
5	JTAG_DIS	R	If this bit is programmed, then **JTAG_CLK** cannot be configured in JTAG Mode. OCDS debug access to 8051 CPU is disabled. LVJTAG access is also disabled.
4:3	Reserved	R	Reserved
2:1	LOCK[1:0]	R	Active high. Locks VPP switch in individual sectors 1 and 0.
0	MLOCK	R	Active high. Locks VPP switch to all sectors.

16.9 Clock Power Test Registers

These registers at address offsets 0x20 to 0x23 are for Microchip Internal use only, and changing the default values may cause faulty operation of the device.

Table 16.22 CLKPWR Test1 Register

CLKPWR_TEST1 (0X020 – RESET=0X00)			**CLKPWR REGISTER**
BIT	**NAME**	**R/W**	**DESCRIPTION**
7:6	TEMPCOMPPRG_48MOSC[1:0]	RO	The default value is 00. The effect of changing these values is not documented. This field is tied to 00.
5:3	IBIASPRG_48MOSC[2:0]	RW	The default value is 000. The effect of changing these values is not documented.
2:0	STARTUP_48MOSC[2:0]	RW	The default value is 000. The effect of changing these values is not documented.

Table 16.23 CLKPWR Test2 Register

CLKPWR_TEST2 (0X021 – RESET=0X00)			CLKPWR TEST2 REGISTER
BIT	**NAME**	**R/W**	**DESCRIPTION**
7	TF_PG_LDO3A	RW	The default value is 0.
6	TF_PG_SEL_LDO3A	RW	The default value is 0. A value of 1 bypasses the power good detector for LDO3A, and the value written in TF_PG_LDO3A is observed in POWERGOOD_LDO3A field. This field is defined for scan purposes.
5	TF_PG_LDO1	RW	The default value is 0.
4	TF_PG_SEL_LDO1	RW	The default value is 0. A value of 1 bypasses the power good detector for LDO1, and the value written in TF_PG_LDO1 is observed in POWERGOOD_LDO1 field. These two fields can be tested in functional mode.
3	TF_PG_LDO2A	RW	The default value is 0, since Smart Card 2 is disabled by default.
2	TF_PG_SEL_LDO2A	RW	The default value is 0. A value of 1 bypasses the power good detector for LDO2A, and the value written in TF_PG_LDO2A is observed in POWERGOOD_LDO2A field.
1	TF_PG_LDO2B	RW	The default value is 0 since Smart Card 1 is disabled by default.
0	TF_PG_SEL_LDO2B	RW	The default value is 0. A value of 1 bypasses the power good detector for LDO2B, and the value written in TF_PG_LDO2B is observed in POWERGOOD_LDO2B field.

Table 16.24 CLKPWR Test3 Register

CLKPWR_TEST3 (0X022 – RESET=0X00)			CLKPWR TEST3 REGISTER
BIT	**NAME**	**R/W**	**DESCRIPTION**
7	TF_SFST_LDO3A	RW	The default value is 0. A value of 1 disables the soft start feature of LDO3A.
6	TF_SFST_LDO1	RW	The default value is 0. A value of 1 disables the soft start feature of LDO1.
5	TF_SFST_LDO2A	RW	The default value is 0. A value of 1 disables the soft start feature of LDO2A.
4	TF_SFST_LDO2B	RW	The default value is 0. A value of 1 disables the soft start feature of LDO2B.
3	TF_CL_LDO3A	RW	The default value is 0. A value of 1 doubles the current limit of LDO3A.
2	TF_CL_LDO1	RW	The default value is 0. A value of 1 doubles the current limit of LDO1.
1	TF_CL_LDO2A	RW	The default value is 0. A value of 1 doubles the current limit of LDO2A.
0	TF_CL_LDO2B	RW	The default value is 0. A value of 1 doubles the current limit of LDO2B.

© 2013 Microchip Technology Inc.

Table 16.25 CLKPWR Test4 Register

CLKPWR_TEST4 (0X023 – RESET=0X00)			CLKPWR TEST4 REGISTER
BIT	**NAME**	**R/W**	**DESCRIPTION**
7	Reserved	RO	This bit is always zero.
6	RESET_SRC_SRST	RO	This bit if set indicates that the reset of the chip was due to ssrstreq bit in SRST register.
5	RESET_SRC_WDOG	RO	This bit if set indicates that the reset of the chip was due to Watchdog reset.
4	FAKE_TF_PG_2A_REG	R/W	Always read as zero in SEC1110/SEC1210. This bit if set disables powergood faking through the regulator interface. Instead it enables PWR_GD pin of SC2 PADS to be powergood faked directly. For the direct powergood faking, this bit should be set along with both "TF_PG_LDO2A and TF_PG_SEL_LDO2A" bits. When this bit is cleared, LDO2A regulator interface will be used to powergood faking.
3	FAKE_TF_PG_2B_REG	R/W	Always read as zero in SEC1110/SEC1210. This bit if set disables powergood faking through the regulator interface. Instead it enables PWR_GD pin of SC1 PADS to be powergood faked directly. For the direct powergood faking, this bit should be set along with both "TF_PG_LDO2B and TF_PG_SEL_LDO2B" bits. When this bit is cleared, LDO2B regulator interface will be used to powergood faking.
2	JTAG_TDI_LAT	RO	This bit indicates the value of JTAG_TDI pin at internal reset release time (3.3V pads are powered up).
1	JTAG_CLK_LAT	RO	This bit indicates the value of JTAG_CLK pin at internal reset release time (3.3V pads are powered up).
0	TEST_LAT	RO	This bit indicates the value of TEST pin at internal reset release time (3.3V pads are powered up).

In functional mode, if EXT_OSC48_PRESENT bit is one, then JTAG_TDI_LAT bit is used by boot ROM firmware to indicate the external clock frequency as 48 Mhz (JTAG_TDI_LAT=1), or 12 Mhz (JTAG_TDI_LAT=0). The firmware changes the MEM_CLK_DIV factor as 12 (external 48 Mhz clock), or 1 (external 12 Mhz clock). This test feature is used in ATE mode.

Table 16.26 CLKPWR VERSION Register

CLKPWR_VERSION (0X01B – RESET=0X01)			VERSION REGISTER
BIT	**NAME**	**R/W**	**DESCRIPTION**
7:4	Reserved	R	Always read as zero.
3:0	VERSION[3:0]	R	The field indicates the mask revision of silicon. The default value is 000**1** : indicating A0

Chapter 17 OTP ROM Test Interface

The One Time Programmable (OTP) ROM is 128 kbits in size, organized as 16 kB during Read Mode.

- Up to 4 bits may be programmed at a time

By default, the OTP ROM is read in Single-Ended Mode utilizing a single memory cell per logical bit of information. Two additional read modes are provided to enhance margins and secure data in highly reliable, field programmable systems: Differential Mode and Redundant Mode. The Read Mode is controlled by the Mode Register and can be dynamically changed for different sections of the address space.

- In Single-Ended Read Mode, the memory cell is compared to a reference to determine its state. The main memory is addressed by A[9:0] in Single-Ended Mode. The ROM memory size is 16 kB.
- In Differential Read Mode, two memory cells are compared to each other, one programmed and one not, without a need for a reference. The main memory is addressed by A[9:1] in Differential Mode. The address bit **A0** selects between the two physical cells constituting one logical bit and is used during program and verification operations. The ROM memory size is 8 kB.
- In Redundant Read Mode, two memory cells are accessed in parallel (wired-OR manner) and compared to a higher reference, which results in increased signal margins. Redundant Mode offers improvement for defective programmed cells only; there is no improvement for defective unprogrammed cells (leaky cells). In Redundant Mode, the memory is addressed by A[9:2,0]. Bit **A1** is ignored during read, but is used during program and verify operations. The ROM memory size is 8 kB.
- The memory can also operate in Differential-Redundant Mode utilizing four cells per logical bit of information. In Differential-Redundant Read Mode both address bits A[1:0] are ignored, but they are used for program and verification. The ROM memory size is 4 kB.
- The 8051 CPU can access the OTP in two ways. One is through the parallel interface, where the OTP looks like a regular ROM, with 8051 issuing program or data address, and data being accessed parallelly. The processor also has access to the OTP through a Serial Test Port interface for programming.

© 2013 Microchip Technology Inc.

17.1 OTP ROM Test Registers Summary

The register addresses indicated below are offset address to XDATA base memory address A400h.

Table 17.1 OTP Test Registers Map

REGISTER NAME	XDATA ADDRESS	EC TYPE
OTP_SPECIAL	0x00 ~ 0x0F	R/W
OTP_REDUNDANCY_REG	0x20 ~ 0x2F	R/W
OTP_MODE_MRL	0x30	R/W
OTP_MODE_MRH	0x31	R/W
OTP_MODE_MRAL	0x32	R/W
OTP_MODE_MRAH	0x33	R/W
OTP_MODE_MRBL	0x34	R/W
OTP_MODE_MRBH	0x35	R/W
CPU_TCMD_REG	0x36	R/W
CPU_TCTL_REG	0x37	R/W
CPU_SHIFT_REG	0x38 ~ 0x3B	R/W
Reserved	0x3C ~ 0x3F	R
CPU_TDATA_REG	0x40 ~ 0x4F	R/W

17.2 OTP_ROM Description

The OTP ROM Non-Voltaile Memory (NVM) is organized into a regular structure of rows and columns of memory cells. The memory array is further organized into two sectors and four banks. A sector has 512 words and occupies the A[8:0] address space. The address bit A9 selects the sectors.

To reduce programming time, all banks are programmed simultaneously (i.e., in parallel)

When all the bits are in un-programmed state, a read of all even address (A0=0) is 0, and a read of all odd address (A0=1) is 1.

Note: In SEC1110/SEC1210 Silicon *Anomaly 8*: when running code from OTP that updates the CPU and memory clock dividers, it must not be aligned to a 16 byte boundary. This is because 16 bytes of OTP is fetched at a 16-byte address boundary, and cached for subsequent code fetches. Hence, in SEC1110/SEC1210 chip, use the provided API function in ROM to perform the clock divider update. This function is 16-byte aligned, and ensures that when the write to the CPU and memory clock dividers occurs, an OTP fetch is from the cache and not the OTP ROM.

17.2.1 Boot Rows

In addition to the regular memory array, every sector includes 16 additional rows, called boot rows, for testing and memory bookkeeping purposes. The boot rows form non-continuous address spaces and are accessible when A10 is HIGH. The A10 pin selects between the two address spaces: the main memory address space and the boot address space. A typical boot space map is shown in Table 17.2 on page 224. The lowest boot address of sector 0 and sector 1 are reserved for the power-up reset sequence with their content respectively loaded into the Special Register (sector 0) and the Redundancy Register (sector 1). The user should program these locations with the desired content for the Special and Redundancy registers.

The even locations in the boot rows other than location 0 and 2 can be used by the application either for testing or any specific purpose such as a scratch pad or memory book-keeping. The odd location in the boot row memory are

read-only locations used as examples of Mask ROM. Locations 1,3,5,7, 9, and 11 are unprogrammed and read as all 1s, while locations 13 and 15 are programmed and read as all 0s.

All boot row reads are done in Single-Ended Mode even when the main NVM array is configured in Differential or Redundant Mode.

Table 17.2 Boot Block Address Map for A10:=1

WORD #	SECTOR ADDRESS A9	A[8:4]	A[3:2]	A[1:0]	CONTENTS	PGM ACCESS	DATA ON ALL OUTPUTS
0	0/1	xxxxx	00	00	For Testing or User Application	yes	0 or PGM.
1	0/1	xxxxx	00	01	Read Only, Unprogrammed	no	1
2	0/1	xxxxx	00	10	For Testing or User Application	yes	0 or PGM.
3	0/1	xxxxx	00	11	Read Only, Unprogrammed	no	1
4	0/1	xxxxx	01	00	For Testing or User Application	yes	0 or PGM.
5	0/1	xxxxx	01	01	Read Only, Unprogrammed	no	1
6	0/1	xxxxx	01	10	For Testing or User Application	yes	0 or PGM.
7	0/1	xxxxx	01	11	Read Only, Unprogrammed	no	1
8	0/1	xxxxx	10	00	For Testing or User Application	yes	0 or PGM.
9	0/1	xxxxx	10	01	Read Only, Unprogrammed	no	1
10	0/1	xxxxx	10	10	For Testing or User Application	yes	0 or PGM.
11	0/1	xxxxx	10	11	Read Only, Unprogrammed	no	1
12	0/1	xxxxx	11	00	For Testing or User Application	yes	0 or PGM.
13	0/1	xxxxx	11	01	Read Only, Unprogrammed	no	0
14	0/1	xxxxx	11	10	For Testing or User Application	yes	0 or PGM.
15	0/1	xxxxx	11	11	Read Only, Unprogrammed	no	0

17.2.2 Redundant Mode

Redundant Mode (enabled by MR4) can be used in applications where the certainty of being able to program any information bit is required

The two words that store the information are located at A1=1 and A1=0. During a redundant mode read, the A1 address is ignored; however, A1 is needed during program and program-verify to access the 2 words individually. Program-verify is a programming step where the application sets up the macrocell to read in Single-Ended Mode using aggressive read voltage and timing to verify proper data storage. To ensure that the data will be read back reliably during operation, the same information should be stored into both A1 addresses, regardless of whether any cell is defective.

17.2.3 Row Redundancy

Redundant Mode can also be used with differential read, as Differential-Redundant Mode, in which case 4 cells would be used to store one information bit. The 4 cells reside in the A[1:0] address space 00b to 11b.

Row redundancy is a word-oriented repair mechanism. It can repair both defective programmed and unprogrammed cells, and can be used with all read modes: single-ended, differential, redundant, and differential-redundant.

Row redundancy can also be used to replace already programmed words in situations such as firmware update if the application does not use row redundancy for repairs.

 © 2013 Microchip Technology Inc.

The Redundancy Register (RR) is used to achieve row redundancy and defective word repairs in the NVM memory.

17.2.3.1 Redundant words

In each memory sector there are 16 redundant words (spare entries). To repair a defective word in a sector, the entire 16-word segment containing the defective word is replaced with the 16 redundant words (spare entries) in the same sector. The 16-word segments that can be replaced in the NVM memory are aligned on a 4-bit boundary (lowest 4 bits of address from 0x0 to 0xF). The Redundancy Register stores the addresses of defective 16-word segments in the different sectors.

Only one replacement of 16 words as a group can be made per sector. All 16 redundant words must be programmed with the data that would otherwise go to the normal words.

Typically, to program the redundant words the Mode register ‘row redundancy access’ bit (MR9) should be enabled. The normal words are disabled, and memory operations (program, program-verify, read) are performed only on the redundant words. In this case, the redundant words are addressed as follows: A10=0, A9 selects the sector, A[3:0] selects one of the 16 words, A[8:4] is ignored. Once redundant word programming has finished, disable the row redundancy access bit.

17.2.3.2 Redundancy Register (RR)

Table 17.3 OTP Redundancy Register

OTP_REDUNDANCY_REG (0X20 ~ 0X2F - RESET = 0XXX)			**OTP REDUNDANCY REGISTER**
BIT	**NAME**	**R/W**	**DESCRIPTION**
7	OTP_RR_S2	R/W	Set to 0
6	OTP_RR_A8	R/W	A8 bit of defective word in sector
5	OTP_RR_A7	R/W	A7 bit of defective word in sector
4	OTP_RR_A6	R/W	A6 bit of defective word in sector
3	OTP_RR_BEMF	R/W	Byte Enable Master Fuse, when set to 1, indicates that the OTP_RR byte contains a valid address to be detected. When no detection is required, to prevent the RR byte from producing a match this bit should be set to 0.
2	OTP_RR_A5	R/W	A5 bit of defective word in sector
1	OTP_RR_A4	R/W	A4 bit of defective word in sector
0	Not used	R/W	Not used

Each byte in the RR stores the address of a 16-word segment containing one or multiple defective words. A bit in each byte indicates when the stored address is valid. The addresses stored in the RR are used by the address comparator to detect defective rows to be replaced by the redundant words (spare entries). The number of bytes in the RR are 16. Each byte in the RR corresponds to a memory sector. At power-up or macrocell reset, the RR is automatically loaded from boot rows 0 and 2 of sector 1 (A9=1, A[8:4]=xxxxx, A[3:0]=0/2) in Redundant Mode. Thus the addresses to be detected (defective 16-word segment addresses) must be programmed in boot rows 0 and 2 of sector 1 with the same data.

The RR byte at 0x20 must be used for repairs in sector 0, and RR at 0x21 must be used for repairs in sector 1.

The other redundant words (spare entries) RR bytes 0x22 ~ 0x2F can be used for other purposes such as extra storage, incremental memory updates/replacements, as long as bit 3 of these bytes are not programmed.

When boot rows 0 and 2 of sector 1 have never been programmed, such as during initial macrocell programming, the boot read sequence will load all zeros into RR. Thus bit 3 of all RR bytes will be zero and the address detector will not produce any matches even if the **RED_EN** port is high.

The RR bytes would be programmed at test time, if a defective bit is detected during cell stress test. If the OTP has no defects and the RR bytes are unprogrammed, repairs may be done by the customer for other purposes such as code patching.

17.2.3.3 Address detector

Row redundancy is enabled by setting the **RED_EN** pin HIGH. This pin enables the address comparator. The redundant addresses may be accessed by setting MR9 HIGH for programming or read operations.

The address comparator compares the input addresses against the defective 16-word segment addresses stored in the RR. When a match is found, the word at address A[3:0] in the spare 16-word segment is accessed instead of the normal memory array word.

For 128 Kbits OTP ROM, the sector bits S0=A9, S[2:0]=00.

17.2.4 Special Registers

Table 17.4 OTP Special Register

OTP_SPECIAL (0X00 ~ 0X0F - RESET = 0XXX)			OTP SPECIAL REGISTERS
BIT	**NAME**	**R/W**	**DESCRIPTION**
7:0	OTP_SPECIAL[7:0]	R	Special registers

The OTP Special Register powers up in an *all HIGH* state and is loaded with the content of boot rows 0 and 2, sector 0 after a power-up or a RESET command. The SR may be used to control security lock, multiple-time programmability, encryption keys and other customer-defined functions.

The assignment of the Special Register bytes are shown in Table 17.5, “OTP SR Byte Assignment,” on page 226. The byte 0 location is registered in the OTP_CFG Register when the OTP is powered up the first time. Similarly bytes 1, and 2 are registered by the OSC_TEST_REGS, when the OTP is powered up the first time.

Table 17.5 OTP SR Byte Assignment

BYTE	BITS	NAME	DESCRIPTION
0	7	FORCE_OTP_ROM	1 : Forces execution out of the OTP ROM irrespective of **BOND2** value. 0 : Execute out of ROM or OTP_ROM, or external SPI2 depending on Table 7.1, “Code Execution Truth Table,” on page 35.
	6	OTP_ROM_EN	1 : Forces execution out of the OTP ROM if **BOND2** (i.e., EXT_SPI2_EN) is zero. 0 :Execute out of OTP ROM, or external SPI depending on **BOND2**
	5	JTAG_DIS	If this bit is programmed, then **JTAG_CLK** pin cannot be configured in JTAG Mode. OCDS debug access to 8051 CPU is disabled. LVJTAG access is also disabled.
	4:3	Reserved	Reserved
	2:1	LOCK[1:0]	Active high. Locks VPP switch in individual sectors 1 and 0.
	0	MLOCK	Active high. Locks VPP switch to all sectors.
1	7:0	Reserved	Reserved field for test. This field is used for 48 MHz oscillator trim.

© 2013 Microchip Technology Inc.

Table 17.5 OTP SR Byte Assignment

2	7:4	Reserved	Reserved field for test. This field is used for Band Gap trimming.
	3:2	Reserved	Reserved field for test
	1:0	Reserved	Reserved field for test. This field is used for 48 MHz oscillator trim.
3	7:0	Reserved	Reserved field for test
4	7:0	Reserved	Reserved field for test
5	7:0	Reserved	Reserved field for test.
6	7:0	Reserved	
7	7:0	Reserved	Reserved field for test.
8	7:0	Reserved	
9	7:0	Reserved	Reserved field for test
10	7:0	Reserved	
11	7:0	Reserved	Reserved field for test.
12 13 14 15	7:0	Reserved UNIQUE_SNO	Reserved field for test. This field is a Unique Serial number to make each die unique.

17.2.5 Serial Test Port Interface

The test port is controlled by the following bits:

- **TSCK**, **TSI**, **TSO** (serial interface)
- **TCMD[2:0]** (test port instruction)
- **TRSTN** (asynchronous reset)
- **TCLRN** (asynchronous command clear)

The key objective for the test port design is to provide random access to the memory through a set of shift registers for testing and programming purposes. This is achieved by shifting in and out data, address and command synchronously with a serial clock. The length of all the registers is optimized for fastest test execution.

In addition, a burst mode is provided that allows the user to quickly scan, shift or compare all or selected memory addresses under control of the internal address counter. An example of a READ CLEAN ARRAY test program using the burst mode is provided later.

17.2.5.1 Serial Test Port Operations

The test port consists of an instruction decoder decoding the state of the test control pins **TCMD[2:0]**, a 6-bit command register (CMD), a 24-bit mode register (TMODE), a 24-bit shift register (SHIFT) and a variable length address register (ADDRESS). SERIAL CONTROL logic is used to provide serial data input and serial data output connection.

The following instructions are decoded from pins TCMD[2:0]: IDLE, DIRECT, SHIFT, UPDATE_MODE, UPDATE_ADDR, ROTATE, UPDATE_CMD, INC_ADDR. Table 17.6, “TCMD[2:0] Instruction Decoder,” on page 228 lists all valid instruction codes.

The shift register is controlled by the serial clock TSCK (through JTAG_CLK) while the SHIFT instruction is decoded. The MSB is shifted first. The CMD, ADDRESS and TMODE registers are updated with the contents of the SHIFT register synchronously with **TSCK** upon decoding the UPDATE_CMD, UPDATE_ADDR and UPDATE_MODE instructions respectively. The mapping of the shift register bits to **CMD**, **ADDRESS**, **TMODE** bits is shown in Table 17.7, "TEST PORT Registers Mapping," on page 228. The 8051 CPU has parallel access to the shift register through CPU_SHIFT_REG Register.

The CMD Register controls the macrocell commands: READ, WRITE, PGM, PCH, COMP and RESET. The state of the CMD Register is synchronously with **TSCK** cleared by the IDLE instruction and asynchronously cleared by the **TCLRN** pin LOW. The 8051 CPU has parallel access to the command register through CPU_TCMD_REG Register.

The TMODE Register controls macrocell control inputs. In addition, it controls the output **TSO** (to **JTAG_TDO**) multiplexer and a special burst/increment access mode.

The DIRECT, ROTATE instructions provide control asynchronously for the macrocell **SEN** pin. DIRECT instruction connects the **TSCK** and **TSI** to macrocell serial port pins **SCK** and **SI**, which allows for direct serial access to the macrocell DATA REGISTER and macrocell MODE REGISTER. The ROTATE instruction connects the SO macrocell output to SI macrocell input and connects the TSCK to macrocell SCK input.

The IDLE command clears the macrocell command register at the positive edge of the TSCK clock. The INC_ADDR command acts like the IDLE command but increments the address by 1 or 2 depending on the **INC2** bit in the Test Mode Register.

If INC2 = 0, addr = addr + 1

If INC2 = 1, addr = addr + 2

The tables below provides detail description for instruction set, registers mapping, burst and output TSO mux operation.

Table 17.6 TCMD[2:0] Instruction Decoder

TCMD[2:0]	DECODED STATE	DESCRIPTION
000	IDLE	Reset CMD Register, increment ADDR if BURST0 and READ are active
001	DIRECT	Macro SEN=HIGH, SCK=TSCK, SI=TSI
010	SHIFT	Shift data in SHIFT Register by positive edge of TSCK
011	UPDATE_TMODE	Update TMODE Register by positive edge of TSCK
100	UPDATE_ADDR	Update ADDR Register by positive edge of TSCK
101	ROTATE	Macro SEN=HIGH, SCK=TSCK, SI=SO
110	UPDATE_CMD	Update CMD Register by positive edge of TSCK
111	INC_ADDR	Reset CMD Register, increment ADDR

Table 17.7 TEST PORT Registers Mapping

SHIFT	TMODE REGISTER	CMD REGISTER	ADDRESS REGISTER
SR0	TSO_SEL0	COMP	A0
SR1	TSO_SEL1	PCH	A1
SR2	TSO_SEL2	PGM	A2
SR3	BURST0	READ	A3
SR4	BURST1	WRITE	A4

© 2013 Microchip Technology Inc.

Table 17.7 TEST PORT Registers Mapping (continued)

SR5	INC2	RESET	A5
SR6	MODE_SEL		A6
SR7	RESET_M		A7
SR8	AUX_UPDATE		A8
SR9	MACRO_SEL		A9
SR10	PWR_DOWN		A10
SR11	MLOCK		
SR12	BIT_LOCK0		
SR13	BIT_LOCK1		
SR14	BIT_LOCK2		
SR15	RED_EN		
SR16	PWRUP_ENB		
SR17	LOAD_QR		
SR18	QS_TEST		
SR19	PUP_DIS		
SR20	P_START		
SR21	ALL_BANKS		
SR22	MRB		
SR23	MRA		
SR24	AB0		
SR25	AB1		
SR[26	AB2		
SR27	Reserved		
SR28	Reserved		
SR29	Reserved		
SR30	Reserved		
SR31	Reserved		

Table 17.8 TSO Output Multiplexer Description Burst Control Table

TSO_SEL[2:0]	TSO FUNCTION	TSO_SEL[2:0]	TSO FUNCTION
000	STATUS	100	PWR_UP
001	SO	101	VPP_MON
010	A10	110	STATUS
011	STATUS	111	STATUS

BURST[1:0]	FUNCTION
00	no
01	READ
10	no
11	READ/COMP

17.2.6 Parallel Access to Test Port Interface

Parallel access for the 8051 CPU. This enables parallel writes to the OTP Data and Mode registers.

17.2.6.1 OTP CPU Test Port Command Instruction Register

Table 17.9 CPU Test Port Command Instruction Register

CPU_TCMD_REG (0X36 - RESET = 0X10)			OTP TEST PORT COMMAND REGISTER
BIT	**NAME**	**R/W**	**DESCRIPTION**
7:5	Reserved	R	Always read as 0
4	TRSTN	R/W	OTP Test Port reset of TMODE, CMD, SHIFT registers.
3	TCLRN	R/W	OTP Test Port clear of the command register.
2:0	TCMD[2:0]	R/W	OTP Test Port Command instruction

17.2.6.2 OTP CPU Test Port Control Register

Table 17.10 CPU Test Port Control Register

CPU_TCTL_REG (0X37 - RESET = 0X00)			OTP TEST PORT CONTROL REGISTER
BIT	**NAME**	**R/W**	**DESCRIPTION**
7	COUNT_EN	R/W	Generate clocks in TSCK, COUNT times. If this bit is set, TSCK is generated every CPU clock and COUNT field is decrement by one; until COUNT field becomes zero.
6:0	COUNT[5:0]	R/W	Indicated number of TSCK clocks to generate

17.2.6.3 OTP CPU Test Port Shift Register

Table 17.11 CPU Test Port Shift Register

CPU_SHIFT_REG (0X38 ~ 0X3B- RESET = 0X00)			OTP TEST PORT SHIFT REGISTER
BYTE	**NAME**	**R/W**	**DESCRIPTION**

© 2013 Microchip Technology Inc.

Table 17.11 CPU Test Port Shift Register

0	SHIFT[7:0]	R/W	OTP Test Port Shift register. The mapping of shift register bits to TMODE, CMD, ADDRESS registers of OTP is shown in Table 17.7, "TEST PORT Registers Mapping," on page 228.
1	SHIFT[15:8]	R/W	
2	SHIFT[23:16]	R/W	
3	SHIFT[31:24]	R/W	

17.2.6.4 OTP CPU Test Port Status Register

Table 17.12 CPU Test Port Status Register

CPU_TP_STATUS_REG (0X3C ~ 0X3C- RESET = 0X00)			**OTP TEST PORT STATUS REGISTER**
BIT	**NAME**	**R/W**	**DESCRIPTION**
7:5	Reserved	R	Always read as 0
4	OTP_TSO	R	Indicates the Test Port TSO value.
3	OTP_SO	R	Serial data output from DATA/MODE REGISTER
2	OTP_STATUS	R	Active high. Comparator output.
1	OTP_VPP_MON	R	Active high. If enabled (HIGH), indicates that VPP is applied.
0	OTP_PWR_UP	R	Active high Power-up reset output. HIGH when power detected. Status bit, used by ROM firmware to ensure OTP is working.

The writes to OTP_TDATA_REG[7:0] at 0x40 offset (OTP_TDATA_REG at 0x41 to 0x4F must have been written earlier), cause this data to be input to OTP, and the WRITE command to be pulsed (a single ref_clk).

The bits in TMODE register must have been updated by the firmware by writing to the CPU_SHIFT register and UPDATE_MODE command before any of the Mode register writes.

The reads to any register in OTP_TDATA_REG causes the current internal OTP data register values to be provided to the CPU.

17.2.6.5 Mode Register (MR)

The Mode Register controls all internal references needed for read, program, verify and test operations. The RESET_M command resets the Mode Register to its default settings. The **MODE_SEL** pin selects between the Data Register and the Mode Register for serial shift and parallel write access. Both registers have common serial input and output (SI,SO) pins, but they have separate parallel data input and output buses.

The hardware asserts RESET for a clock (clk48) to the OTPROM to reset the MR, MRA, MRB registers, to be ready for Functional Mode.

Table 17.13 OTP Mode Register LSB

OTP_MODE_MRL (0X30 - RESET = 0X00)			**OTP MODE REGISTER LSB**
BIT	**NAME**	**R/W**	**DESCRIPTION**
7:0	MR[7:0]	R/W	Microchip use only.

Table 17.14 OTP Mode Register MSB

OTP_MODE_MRH (0X31 - RESET = 0X00)			OTP MODE REGISTER MSB
BIT	**NAME**	**R/W**	**DESCRIPTION**
7:0	MR[15:8]	R/W	Microchip use only.

17.2.6.6 Auxiliary Mode Register (MRA and MRB)

In addition to the main Mode Register (MR), OTP macrocells are equipped with Auxiliary Mode Registers (MRA and MRB) controlling internal voltage regulators and charge pumps. These registers are accessed using AUX_UPDATE command and the MRA and MRB settings.

Table 17.15 OTP Mode A Register LSB

OTP_MODE_MRAL (0X32 - RESET = 0X00)			OTP MODE A REGISTER LSB
BIT	**NAME**	**R/W**	**DESCRIPTION**
7:0	MRA[7:0]	R/W	Microchip use only.

Table 17.16 OTP Mode A register MSB

OTP_MODE_MRAH (0X33 - RESET = 0X00)			OTP MODE A REGISTER MSB
BIT	**NAME**	**R/W**	**DESCRIPTION**
7:0	MRA[15:8]	R/W	Microchip use only.

Table 17.17 OTP Mode B Register LSB

OTP_MODE_MRBL (0X34 - RESET = 0X00)			OTP MODE B REGISTER LSB
BIT	**NAME**	**R/W**	**DESCRIPTION**
7:0	MRB[7:0]	R/W	Microchip use only.

Table 17.18 OTP Mode B Register MSB

OTP_MODE_MRBH (0X35 - RESET = 0X00)			OTP MODE B REGISTER MSB
BIT	**NAME**	**R/W**	**DESCRIPTION**
15:0	MRB15:0	R/W	Microchip use only.

The writes to OTP_MODE_MRL (OTP_MODE_MRH must have been written earlier), cause this data to be input to OTP, and the WRITE command to be pulsed (a single ref_clk).

Similarly, the writes to OTP_MODE_MRAL (OTP_MODE_MRAH must have been written earlier), cause this data to be input to OTP, and the WRITE command to be pulsed (a single ref_clk).

© 2013 Microchip Technology Inc.

The writes to OTP_MODE_MRBL (OTP_MODE_MRBH must have been written earlier), cause this data to be input to OTP, and the WRITE command to be pulsed (a single ref_clk).

The bits in TMODE register must have been updated by the firmware by writing to the CPU_SHIFT register and UPDATE_MODE command before any of the Mode register writes.

The reads to OTP_MODE_MRH or OTP_MODE_MRL causes the current internal OTP Mode Register values to be updated to these registers, and provided to the CPU.

The reads to OTP_MODE_MRAH or OTP_MODE_MRAL causes the current internal OTP Mode Register A values to be updated to these registers, and provided to the CPU.

The reads to OTP_MODE_MRBH or OTP_MODE_MRBL causes the current internal OTP Mode Register B values to be updated to these registers, and provided to the CPU.

17.2.7 Memory Commands

17.2.7.1 WRITE Command

The user has full access to the Data and Mode registers through the parallel input/output ports using SHIFT and WRITE commands. The WRITE command loads asynchronously data into the Data Register (or Mode Register). The selection between the Data and Mode registers is done with the **MODE_SEL** bit. During programming, the SHIFT or WRITE commands are used to write data into the Data Register, which is then programmed into the NVM memory array using the PROGRAM command. The commands are also used to setup the different registers (MR, MRA, MRB) of the SiPROM macrocell.

17.2.7.2 SHIFT Command

The OTP ROM macrocell interface is implemented as a serial/parallel input/output interface to the shift registers (Data/Mode registers). The SHIFT command interface includes the Shift Clock (SCK), the Shift Enable (SEN), the Shift Input (SI) and the Shift Output (SO) pins. Bits are shifted serially through the **SI** pin into the Most Significant Bit (MSB) of the Data/Mode Register. All bits inside the Data/Mode Register are shifted by one position lower at each SCK period when SEN is held high. The Least Significant Bit (LSB) of the Data/Mode Register is output on the **SO** pin. All bits are shifted synchronously with the SCK clock.

The selection between the Data and Mode registers is done with the **MODE_SEL** signal.

17.2.7.3 READ Command

The READ command asynchronously transfers data from the memory location addressed by the **A[10:0]** pins to the Data Register output latch, without overriding the input latch set by the WRITE or SHIFT commands. Once retrieved, the data is available on the parallel outputs Q[127:0] or can be shifted out through the **SO** pin using the serial clock SCK and SHIFT command.

The READ command is externally controlled by the READ pulse width. The read cycle starts at the positive READ edge and ends at the negative READ edge. The data is output after the pulse end, as

Chapter 18 TEST Modes, JTAG, and XNOR

There are two JTAG controllers in parallel, one for 8051 CPU Functional Mode and one for test modes. Only one of the them is active at any time, depending on the mode of operation.

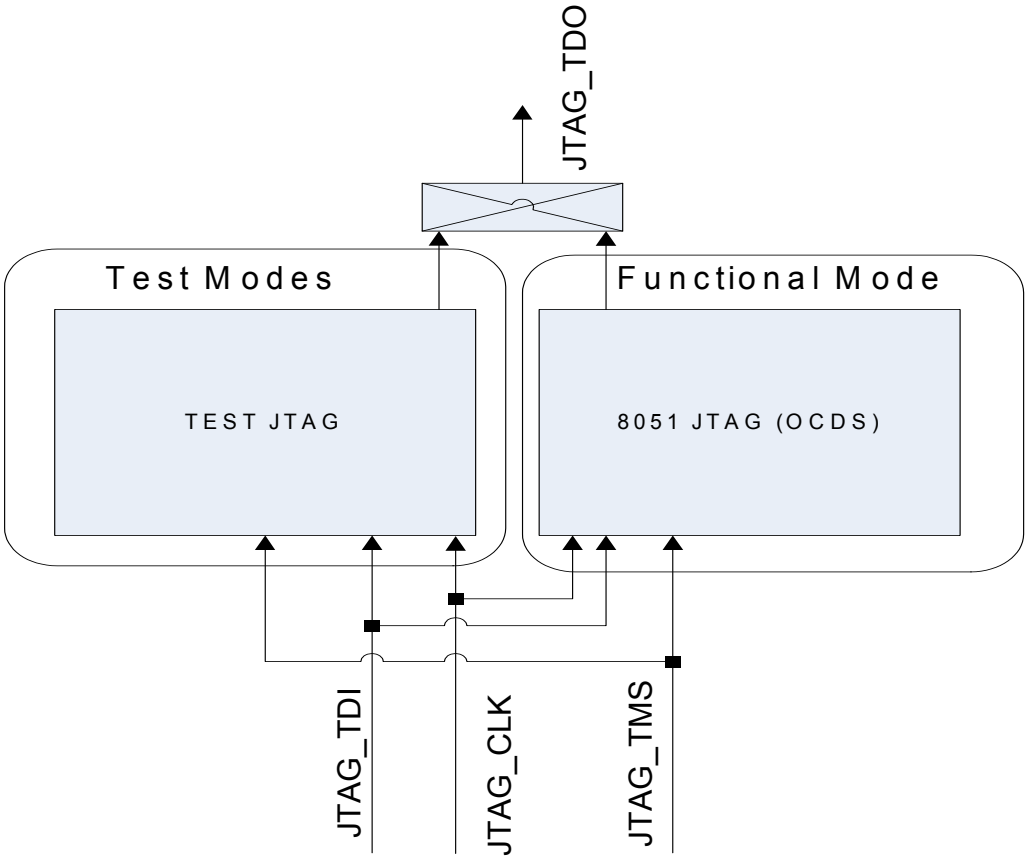

Figure 18.1 JTAG Test Block Diagram

18.1 Functional 8051 JTAG Capabilities

- Fully compliant with IEEE1149.1 standard
- 4-bit Instruction Register
- Standard 1-bit BYPASS register
- Standard 32-bit IDCODE register
- Four JTAG registers give access to on-chip memory and register resources
- Boundary Scan for the chip

© 2013 Microchip Technology Inc.

Chapter 19 DC Parameters

19.1 Maximum Guaranteed Ratings

PARAMETER	SYMBOL	MIN	MAX	UNITS	COMMENTS
Storage Temperature	T_{STOR}	-55	150	°C	
Lead Temperature				°C	Refer to JEDEC Specification J-STD-020D
VDD5 supply voltage	V_{DD5}	-0.3	5.5	V	
Voltage on USB_DP and USB_DM pins		-0.3	3.6	V	3.3 V ± 10%.
Voltage on **RESET_N**		0	V_{DD5} (Note 19.3)	V	This pin may be connected to VDD5 externally (optionally to a RC circuit), or is between 3.0 to VDD5. indefinitely, without damage to the device as long as V_{DD5} are less than 5.5 V and T_A is less than 70°C.
Voltage on any signal pin		-0.3	5.5	V	▪ Positive Voltage on any signal pin, with respect to Ground 5.5 V ▪ Negative Voltage on any pin, with respect to Ground-0.3 V ▪ Maximum VDD5, +5.5 V

Note 19.1 Stresses above the specified parameters may cause permanent damage to the device. This is a stress rating only. Functional operation of the device at any condition above those indicated in the operation sections of this specification is not implied.

Note 19.2 When powering this device from laboratory or system power supplies the Absolute Maximum Ratings must not be exceeded or device failure can result. Some power supplies exhibit voltage spikes on their outputs when the AC power is switched on or off. In addition, voltage transients on the AC power line may appear on the DC output. When this possibility exists, a clamp circuit should be used.

Note 19.3 **RESET_N** should not be set HIGH (e.g., 5.5 V) if VDD5 is 0 as the circuit will not be reliable.

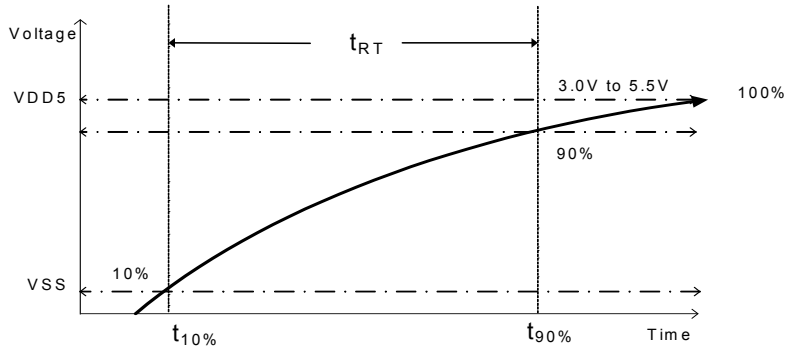

Figure 19.1 Supply Rise Time Models

19.2 Operating Conditions

PARAMETER	SYMBOL	MIN	MAX	UNITS	COMMENTS
Operating Temperature	T_A	Note 19.4	Note 19.5	°C	Ambient temperature in air.
5.0 V supply voltage	V_{DD5}	3.0	5.5	V	This pin may be connected to VBUS of USB. To support Class A Smart Card a 4.8 V minimum is required which may not be met by VBUS.
VDD5 supply rise time	t_{RT}	400		ns	(Figure 19.1)
Voltage on USB_DP and USB_DM pins		3.0	3.6	V	If VDD5 drops below 3.6 V, then the MAX becomes V_{DD5}
Voltage on **RESET_N**		0	V_{DD5} (Note 19.3)	V	This pin may be connected to VDD5 externally (optionally to a RC circuit), or is between 3.0 to VDD5. indefinitely, without damage to the device as long as V_{DD5} are less than 5.5 V and T_A is less than 70°C.
Voltage on any signal pin		-0.3	5.5	V	Other than USB_DP, USB_DM, Smart Card pins, **RESET_N**

Note 19.4 0°C for commercial, -40°C for industrial.

Note 19.5 +70°C for commercial, +85°C for industrial.

© 2013 Microchip Technology Inc.

19.3 DC Electrical Characteristics

(TA = 0°C - 70°C, VDD5 = +3.6 V to +5.5 V, unless otherwise noted)

PARAMETER	SYMBOL	MIN	TYP	MAX	UNITS	COMMENTS
I/O8PUD Type Bidir Pad						
Low Output Level	V_{OL}	-	-	0.4	V	I_{OL} = -8 mA
High Output Level	V_{OH}	V_{DD33} - 0.4	-	-	V	I_{OH} = 8 mA
8 mA I/O sinking current	I_{OL8}	8.3	12.6	18.4	mA	V_{OUT} = 0.4 V
8 mA I/O sinking output impedance	R_{OL8}	21.7	31.6	48.3	Ω	V_{OUT} = 0.4 V
8 mA I/O sourcing current	I_{OH8}	8.1	11.6	16	mA	V_{OUT} = V_{DD33} - 0.4 V
8 mA I/O sourcing output impedance	R_{OH8}	25	34.6	50	Ω	V_{OUT} = V_{DD33} - 0.4 V
Output Leakage	I_{IH5}			1	µA	V_{IN}= 0 to V_{DD33},27°C
		1.4	8	12	µA	V_{IN} = 0 to 5.5 V, 27°C
				20	µA	V_{IN} = 0 to 5.5 V, 85°C
				80	µA	V_{IN}=0 to 5.5 V,125°C (Note 19.6)
Low Input Level	V_{IL}	-0.3	-	0.8	V	
High Input Level	V_{IH5}	2.0	-	5.5	V	
Hysteresis	V_{HYSI}	336	399	459	mV	
Pull-Down	R_{DPD}	46	65	90	kΩ	Condition Vpad = VDD33
	I_{DPD}	33	50	79	µA	
Pull-Up	R_{DPU}	53	66	80	kΩ	Condition Vpad = 0 V (Note 19.11)
	I_{DPU}	38	50	68	µA	
IO-U (Note 19.8)						USB (Note 19.8) (Note 19.9)
RESET_N Rise Time	Trst_r	100			ns	RESET_N pad (Note 19.3)
RESET_N Fall Time	Trst_f	100			ns	
RESET_N Low Input level	V_{ILRST}			0.1	V	RESET_N low causes STOP mode entry

PARAMETER	SYMBOL	MIN	TYP	MAX	UNITS	COMMENTS
Oscillator 48/8/4 MHz accuracy -40 < T < 125 °C 3.3 < VDD5< 6.8 V	F_{48acc}		0.1	0.2	%	Internal oscillator @ 48 MHz with USB Dynamic Trim enabled
	F_{48accd}		0.82	1.5	%	Internal oscillator @ 48 MHz without USB Dynamic Trim enabled
	F_{8acc}		0.78	1.83	%	Internal oscillator @ 8 MHz
	F_{4acc}		0.78	1.83	%	Internal oscillator @ 4 MHz

Note 19.6 Output leakage is measured with the current pins in high impedance.

Note 19.7 See Chapter 7, *USB Specification Revision 2.0* for USB DC electrical characteristics.

Note 19.8 See the *USB 2.0 Specification*, Chapter 7, for USB DC electrical characteristics.

Note 19.9 The minimum VDD5 voltage necessary for proper operation of USB is 3.6 V.

Note 19.10 The USB suspend mode current I_{CSBY} includes the current drawn through the USB_DP pin, which is mandatory to indicate it is connected as a 12 Mbps device.

Note 19.11 Pull-up and pull-down impedances change with pad output voltage due to 5 V protection circuitry, the voltage measured on a 5 V tolerant I/O pad during pull-up is a volt tolerant below **VDD33**.

Note 19.12 See the ISO/IEC7816-3 Third Edition 2006-11-01, Section 5.2 for Smart Card electrical characteristics.

Note 19.13 See the EMV 4.3 Specification for Smart Card Test and compliance setup.

Note 19.14 See the GSM Specification for Smart Card Test and compliance setup.

Note 19.15 All signal pins are 5 V tolerant

PARAMETER	SYMBOL	MIN	TYP	MAX	UNITS	COMMENTS
Smart Card SC1_VCC, SC2_VCC Regulator Output (IEC7816-3 Class A/B/C)						
Smart Card Power Supply Voltage	V_{SC1_VCC}, V_{SC2_VCC}	4.6	VDD5 -0.2	min ((VDD5 - 0.285), 5.25)	V	Class A mode, I_{SC1_VCC} = 0 to 55 mA Note 19.16
		2.76	3.0	3.24	V	Class B mode
		1.66	1.8	1.94	V	Class C mode
Smart Card Power Supply current	I_{SC1}, I_{SC2}			55	mA	Class A/B/C
Smart Card Over Current Sense (OCS) Detection	I_{OCS1}, I_{OCS2}	110			mA	
Detection Time on OCS	t_{OSCDET}			1	µs	

© 2013 Microchip Technology Inc.

PARAMETER	SYMBOL	MIN	TYP	MAX	UNITS	COMMENTS
SC1_VCC/SC2_VCC Turn Off Time	t_{SCOFF}			5	ms	SEC1110/SEC1210 A1 version Note 19.17
				500	µs	All Later versions
SC1_VCC/SC2_VCC Turn On Time	t_{SCON}			1	ms	1.0 µF load Note 19.17
Smart Card SC1_CLK/SC2_CLK Pin						
SC1_CLK, **SC2_CLK** Low Output Level at V_{SC1_VCC}/V_{SC2_VCC}=min @ C_L=30pF Note 19.18	V_{OL}	0		0.4	V	Class A: SEC1110/SEC1210 A1 version: 100µA < I_{OL} < 0, All Later versions: I_{OLmax} = -1 mA @125 °C
		0		0.4	V	Class B: SEC1110/SEC1210 A1 version: 100µA < I_{OL} < 0, Later versions: I_{OLmax} = -1 mA @125 °C
		0		0.15 V_{SCx_VCC}	V	Class C: SEC1110/SEC1210 A1 version: 100µA < I_{OL} < 0, Later versions: I_{OLmax} = -1 mA @125 °C
SC1_CLK, **SC2_CLK** High Output Level at V_{SC1_VCC}/V_{SC2_VCC}=min @ C_L=30pF Note 19.19	V_{OH}	V_{SCx_VCC} - 0.5V		V_{SCx_VCC}	V	Class A 0<I_{OH}< +961µA @125 °C
		0.8 V_{SCx_VCC}		V_{SCx_VCC}	V	Class B 0<I_{OH}< +777µA @125 °C
		0.8 V_{SCx_VCC}		V_{SCx_VCC}	V	Class C 0<I_{OH}< +305µA @125 °C
SC1_CLK, **SC2_CLK** Rise/Fall Time	t_R	9.9	13	16.67	ns	@ C_L = 30 pF, Rload=33 Ω, Class A/B/C
	t_F	6.5	10	16.2	ns	
SC1_CLK, **SC2_CLK** Clock Accuracy		-	0.1	0.25	%	USB Dynamic Trimming is on
		-	0.82	1.5	%	USB Dynamic trim is off. Same as F_{48accd}
SC1_CLK, **SC2_CLK** Clock Duty Cycle		48		52	%	Oscillator in 48 MHz mode.
SC1_CLK, **SC2_CLK** Frequency	F_{SCx_CLK}	1		4.8	MHz	Generated by dividing 48 MHz by an integer ranging from 10 to 48.

PARAMETER	SYMBOL	MIN	TYP	MAX	UNITS	COMMENTS
Smart Card SC1_RST/ SC2_RST Pin						
SC1_RST, **SC2_RST** Low Output Level at V_{SC1_VCC}/V_{SC2_VCC}=min @ C_L=30pF Note 19.18	V_{OL}	0		0.4	V	Class A: SEC1110/SEC1210 A1 version: 100µA < I_{OL} < 0, All Later versions: I_{OLmax} = -1 mA @125 °C
		0		0.4	V	Class B: SEC1110/SEC1210 A1 version: 100µA < I_{OL} < 0, Later versions: I_{OLmax} = -1 mA @125 °C
		0		0.15 V_{SCx_VCC}	V	Class C: SEC1110/SEC1210 A1 version: 100µA < I_{OL} < 0, Later versions: I_{OLmax} = -1 mA @125 °C
SC1_RST, **SC2_RST** High Output Level at V_{SC1_VCC}/V_{SC2_VCC}=min @ C_L=30pF Note 19.19	V_{OH}	V_{SCx_VCC} - 0.5V		V_{SCx_VCC}	V	Class A 0 < I_{OH} < +800 µA @125 °C
		0.8 V_{SCx_VCC}		V_{SCx_VCC}	V	Class B 0 < I_{OH} < +870 µA @125 °C
		0.8 V_{SCx_VCC}		V_{SCx_VCC}	V	Class C 0 < I_{OH} < +333 µA @125 °C
SC1_RST, **SC2_RST** Rise/Fall Time	t_R	32		250	ns	@ C_L = 30 pF, Rload=33 Ω, Class A/B/C
	t_F	32		800	ns	

© 2013 Microchip Technology Inc.

PARAMETER	SYMBOL	MIN	TYP	MAX	UNITS	COMMENTS
Smart Card SC1_IO/ SC2_IO, SC1_C4, SC1_C8 Pins						
SC1_IO/ SC2_IO, SC1_C4, SC1_C8 Low Output Level at V_{SC1_VCC}/V_{SC1_VCC}=min @ C_L=30pF Note 19.18	V_{OL}	0		0.4	V	Class A: SEC1110/SEC1210 A1 version: 100µA < I_{OL} < 0, All Later versions: I_{OLmax} = -1 mA @125 °C
		0		0.4	V	Class B: SEC1110/SEC1210 A1 version: 100µA < I_{OL} < 0, Later versions: I_{OLmax} = -1 mA @125 °C
		0		0.15 V_{SCx_VCC}	V	Class C: SEC1110/SEC1210 A1 version: 100µA < I_{OL} < 0, Later versions: I_{OLmax} = -1 mA @125 °C
SC1_IO/ SC2_IO, SC1_C4, SC1_C8 High Output Level at V_{SC1_VCC}/V_{SC1_VCC}=min @ C_L=30pF Note 19.19	V_{OH}	0.8V_{SCx_VCC}		V_{SCx_VCC}	V	Class A 0 < I_{OH} < +1.56 mA @125 °C
		0.8V_{SCx_VCC}		V_{SCx_VCC}	V	Class B 0 <I_{OH} < +785 µA @125 °C
		0.8V_{SCx_VCC}		V_{SCx_VCC}	V	Class C 0 < I_{OH} < +307 µA @125 °C
SC1_IO/ SC2_IO, SC1_C4, SC1_C8 Rise/Fall time	t_R	32		237	ns	@ C_L = 30 pF, Rload=33 Ω, Class A/B/C
	t_F	32		374	ns	

PARAMETER	SYMBOL	MIN	TYP	MAX	UNITS	COMMENTS
SC1_IO/ SC2_IO, SC1_C4, SC1_C8 Low Input Level @I_{IL} = - 20µA @ C_L=30pF Note 19.20	V_{IL}	-0.3		0.2 V_{SCx_VCC}	V	Class A: SEC1110/SEC1210 A1 version: 100µA < I_{OL} < 0, All Later versions: I_{OLmax} = -1 mA @125 °C
		-0.3		0.2 V_{SCx_VCC}	V	Class B: SEC1110/SEC1210 A1 version: 100µA < I_{OL} < 0, Later versions: I_{OLmax} = -1 mA @125 °C
		-0.3		0.5	V	Class C: SEC1110/SEC1210 A1 version: 100µA < I_{OL} < 0, Later versions: I_{OLmax} = -1 mA @125 °C
SC1_IO/ SC2_IO, SC1_C4, SC1_C8 High Input Level @I_{IL} = + 20µA @ C_L=30pF Note 19.20	V_{IH}	0.6 V_{SCx_VCC}		V_{SCx_VCC} + 0.3	V	Class A 0 < I_{OH} < +1.56 mA @125 °C
		0.6 V_{SCx_VCC}		V_{SCx_VCC} + 0.3	V	Class B 0 < I_{OH} < +785 µA @125 °C
		0.6 V_{SCx_VCC}		V_{SCx_VCC} + 0.3	V	Class C 0 < I_{OH} < +307 µA @125 °C
All Smart Card Signal Pins						
Pull-up Resistor	R_{PU1}	16.39	20	24.19	kΩ	Only for **SC1_IO, SC2_IO, SC1_C4, SC1_C8**
	R_{PU2}	9.01	11.14	13.25	kΩ	
Pull-down Resistor	R_{PD}	54.55	67	79.78	kΩ	Used in GPIO mode
Short Circuit Current	I_{SC}	-15		+15	mA	Signals SCx_IO, SC1_C4, SC1_C8, SCx_RST, SCx_CLK

Note 19.16 The SC1 (or SC2) regulators are in linear drop-off mode, when operated in Class A. If VDD5 voltage drops below 4.8 V, VDD5_LOW=1 an interrupt is received, indicating firmware not to operate in Class A Mode.

Note 19.17 In the SEC1110/SEC1210 version, the software workaround for Anomaly 12, 13, 17 for activation, deactivation must be used. In subsequent versions, the SCx_VCC turn-off time is 500 µS maximum.

Note 19.18 V_{OL}signal perturbations is -0.25 < V < min (+0.4 V,+0.15 V_{cc})

Note 19.19 V_{OH} signal perturbations is min (V_{cc}-0.5, 0.8Vcc) < V < V_{cc}+0.25V

Note 19.20 To allow for overshoot the voltage on I/O shall remain between -0.3 V and V_{cc} + 0.3 V

© 2013 Microchip Technology Inc.

T_A = 5°C; fc = 1 MHz; VDD5

Table 19.1 Pin Capacitance

PARAMETER	SYMBOL	LIMITS			UNIT	TEST CONDITION
		MIN	TY	MAX		
Input Capacitance	C_{IN}			10	pF	All pins (except USB pins and pins under test) are tied to AC ground.
Output Capacitance	C_{OUT}			10	pF	All GPIO pins except Smart Card and USB.

19.4 Power Consumption

The power consumed depends on the firmware. The tables below indicate current consumption for CCID firmware (v1.4) under the following conditions

- Internal oscillator at 48 MHz, MEM_CLK=CPU_CLK=16 MHz or MEM_CLK=CPU_CLK=9.6 MHz
- Internal block **SC1_CLK**=48 MHz, **SC1_CLK**=4.8 MHz
- Internal blocks SPI1, UART, SPI2 are turned off
- In USB suspend state, the LDO3A regulator is powered off, internal oscillator is off.

Total VDD5 current is I_{CC} + I_{SC1}+ I_{SC2}

(TA = 0°C - 70°C, VDD5 = +5.0 V)

Table 19.2 SEC1110 Supply Current

PARAMETER	SYMBOL	MIN	TYP	MAX	UNITS	COMMENTS
Supply Current Unconfigured USB @ V_{DD5} = 5.0 V	$I_{ICCINIT}$		5.2	5.5	mA	CPU_CLK=16 MHz
			4.8	4.9	mA	CPU_CLK=9.6 MHz
Supply Current Idle Mode @ V_{DD5} = 5.0 V	$I_{ICCIDLE}$		5.3	5.5	mA	CPU_CLK=16 MHz
			4.9	5.0	mA	CPU_CLK=9.6 MHz
Supply Current Operating Mode @ V_{DD5} = 5.0 V	I_{ICCSC1}		7.3	7.5	mA	CPU_CLK=16 MHz, **SC1_VCC**=5V, but **SC1_VCC** current is excluded
			6.8	6.9	mA	CPU_CLK=9.6 MHz **SC1_VCC**=5 V, but **SC1_VCC** current is excluded
Supply Current Standby Mode @ V_{DD5} = 5.0 V Note 19.10	I_{CCSH} I_{CCSL}		392		µA	With **SC1_PRSNT_N** not grounded.
	I_{CCSH1} I_{CCSL1}		446		µA	With Smart Card1 present, i.e., **SC1_PRSNT_N** is 0 V.
Supply Current STOP Mode	I_{STOP}		0.11	1.0	µA	@ V_{DDD5} = 5.0 V

Table 19.3 SEC1210 Supply Current

PARAMETER	SYMBOL	MIN	TYP	MAX	UNITS	COMMENTS
Supply Current Unconfigured USB @ V_{DD5}= 5.0 V	$I_{ICCINIT}$		5.2	5.5	mA	CPU_CLK=16 MHz
			4.8	4.9	mA	CPU_CLK=9.6 MHz
Supply Current Idle mode @ V_{DD5} = 5.0 V	$I_{ICCIDLE}$		5.3	5.5	mA	CPU_CLK=16 MHz
			4.9	5.0	mA	CPU_CLK=9.6 MHz
Supply Current Operating mode @ V_{DD5}= 5.0 V	I_{ICCSC1}		7.3	7.5	mA	CPU_CLK=16 MHz, **SC1_VCC**=5V, but **SC1_VCC** current is excluded
			6.8	6.9	mA	CPU_CLK=9.6 MHz **SC1_VCC**=5V, but **SC1_VCC** current is excluded
Supply Current Operating mode @ V_{DD5}= 5.0 V	I_{ICCSC2}		8.8	8.82	mA	CPU_CLK=16 MHz, **SC1_VCC**, SC2_VCC=5V, but **SC1_VCC**, SC2_VCC current is excluded
			8.3	8.5	mA	CPU_CLK=9.6 MHz **SC1_VCC**, SC2_VCC=5V, but **SC1_VCC**, SC2_VCC current is excluded
Supply Current USB Suspend @ V_{DD5} = 5.0 V Note 19.10	I_{CCSH}		392		µA	With **SC1_PRSNT_N** not grounded.
	I_{CCSH1}		446		µA	With Smart Card1 present, i.e., **SC1_PRSNT_N** is 0 V.
	I_{CCSH2}		502		µA	With Smart Card1, Smart Card2 present, i.e., **SC1_PRSNT_N** and **SC2_PRSNT_N** are 0 V.
Supply Current STOP Mode	I_{STOP}		0.11	1.0	µA	@ V_{DDD5}= 5.0 V

19.5 Package Thermal Specifications

Table 19.4 Package Thermal Resistance Parameters

SYMBOL	SEC1110 (^{O}C/W)	SEC1210 (^{O}C/W)	VELOCITY (METERS/SEC)
PACKAGE	16SQFN	24SQFN	
θ_{JA}	59	40	0

© 2013 Microchip Technology Inc.

Use the following formula to calculate the junction temperature: $T_J = T_A + P * \theta_{JA}$

Table 19.5 Legend

SYMBOL	DESCRIPTION
T_J	Junction temperature
T_A	Ambient temperature
P	Power dissipated
θ_{JA}	Junction to ambient temperature

Chapter 20 8051 Timers

20.1 General Description

This chapter contains a description of the Timers within the Embedded controller used in the SEC1110 and SEC1210.

The Embedded controller has the following timers.

- Timer 0 - 16-bit
- Timer 1 - 16-bit
- Timer 2 - 16-bit
- Watchdog timer (16-bit) with prescaler (8-bit)

20.2 Timer 0

The Timer 0 subcomponent contains the Timer 0 - a 16-bit register that can be configured for counter or timer operations. It can be accessed as SFRs: TH0 and TL0.

In the Timer Mode, the Timer 0 is incremented every 12 clock cycles, which means that it counts up after every 12 periods of the clock signal.

In the Counter Mode, the Timer 0 is incremented when the falling edge is detected at the corresponding input pin – t0 (**JTAG_CLK**) for Timer 0. Since it takes 2 clock cycles to recognize a 1-to-0 event, the maximum input count rate is 1/2 of the CPU clock frequency. There are no restrictions on the duty cycle, however to ensure proper recognition of 0 or 1 state, an input should be stable for at least 1 CPU clock cycle.

Four operating modes can be selected for Timer 0. Two Special Function registers: TMOD and TCON are used to select the appropriate mode.

The INT0_N signal in the following figures for Timer 0 are connected to External Interrupt 1 (GPIO 0,1,2 combined interrupts). If the gate flag tmod7 is enabled, and the GPIO Interrupt Enable Register has only one GPIO pin enabled, then the counting of Timer 0 can be controlled by external GPIO pin.

20.2.1 Mode 0 and Mode 1

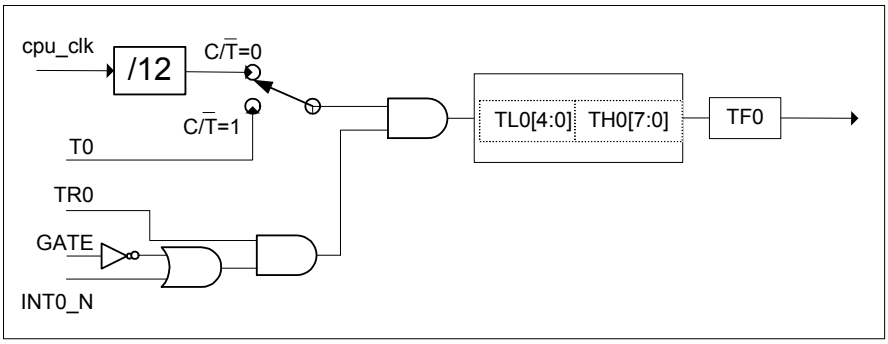

Figure 20.1 Timer 0 in Mode 0 and Mode 1

In Mode 0, Timer 0 is configured as a 13-bit register (TL0=5 bits, TH0=8 bits). The upper 3 bits of TL0 are unchanged and should be ignored.

In Mode 1, Timer 0 is configured as a 16-bit register.

20.2.1.1 Timer 0 and Counter 0 in Mode 0

This mode is invoked by setting the **tmod[1:0]**=00 flags of the TMOD Register.

In this mode, the count rate is derived from the clk input for the timer option or from the t0 (**JTAG_CLK**) input for the counter option. The timer option is selected by clearing the **tmod2** flag, otherwise the counter option is selected.

© 2013 Microchip Technology Inc.

The timer/counter is divided into two 8-bit registers, one for the lower and one for the higher byte. The lower byte is additionally divided into two parts consisting of a lower 5 bits and a higher 3 bits (only the higher 5 bits are part of the counter). This makes the Timer 0 or Counter 0 a 13-bit counter that is incremented every 12 clock cycles, or incremented when the external signal t0 changes its value from 1 to 0.

When Timer/Counter 0 overflows, the **tcon5** flag is set and an interrupt is generated through the tf0 output pin. This bit is cleared when acknowledge signal (int0ack) arrives.

The timer/counter may be controlled by software or hardware. The **tcon4** flag must be set to run the Timer 0 Interrupt on int0 stops counting, if the appropriate gate flag **tmod3** is enabled.

See Figure 20.1 "Timer 0 in Mode 0 and Mode 1" on page 246.

20.2.1.2 Timer 0 and Counter 0 in Mode 1

This mode is invoked by setting the **tmod[1:0]**=01 flags of the TMOD Register.

This mode differs from Mode 0 only in that the lower byte is not divided in 5-bit and 3-bit parts, but the whole lower byte works as a counter. The Timer/Counter 0 is a 16-bit counter in Mode 1.

See Figure 20.1 "Timer 0 in Mode 0 and Mode 1" on page 246.

20.2.2 Mode 2

In this mode, the Timer 0 is configured as an 8-bit register with auto-reload.

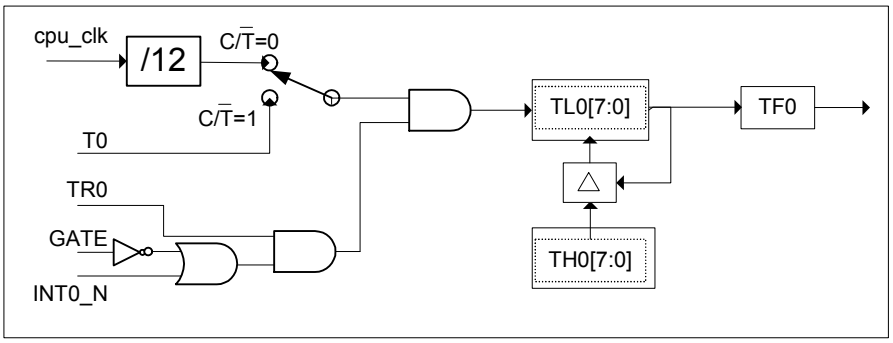

Figure 20.2 Timer 0 in Mode 2

This mode is invoked by setting the **tmod[1:0]**=10 flags of the TMOD Register. In this mode, the count rate is derived from the clk input for the timer option or from the t0 input for counter option. The timer option is selected by clearing the **tmod2** flag, otherwise the counter option is selected.

In this mode, only the lower byte (tl0) is incremented every 12 clock cycles, or the lower byte is incremented when the external signal t0 (**JTAG_CLK**) changes its value from 1 to 0.

In this mode, the timer or counter works as an 8-bit reload timer/counter. When the lower byte of the timer or counter overflows, the **tcon5** flag is set and an interrupt is generated through the tf0 output pin. This bit is cleared when an acknowledge signal (int0ack) arrives. Additionally, when the overflow occurs the new value is fetched from higher byte (TH0) to the lower byte (TL0).

The Timer/Counter may be controlled by software or hardware. The **tcon4** flag must be set to run the Timer 0 Interrupt when int0 stops counting, if the appropriate gate flag **tmod3** is enabled.

See Figure 20.2 "Timer 0 in Mode 2" on page 247.

20.2.3 Mode 3

In Mode 3, Timer 0 is configured as one 8-bit timer or counter and one 8-bit timer. When Timer 0 works in Mode 3, Timer 1 can still be used in applications not requiring an interrupt from Timer 1.

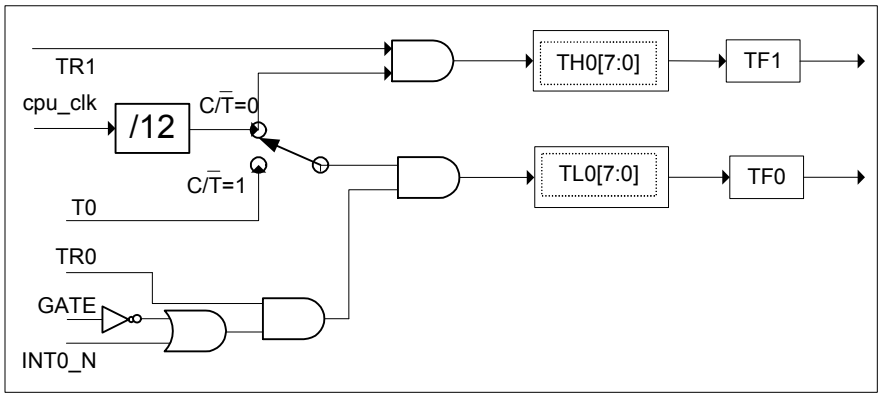

Figure 20.3 Timer 0 in Mode 3

This mode is invoked by setting the **tmod[1:0]**=11 flag of TMOD Register.

In this mode, the count rate for lower byte is derived from the clk input for the timer option or from the t0 input for counter option, but the count rate for the higher byte is only derived from the clk. The timer option is selected by clearing **tmod2** flag, otherwise the counter option is selected.

In this mode, the lower byte (TL0) is incremented every 12 clock cycles or when the external signal t0 changes its value from 1 to 0. The higher byte (TH0) is incremented every 12 clock cycles.

When the lower byte of the timer or counter overflows, the **tcon5** flag is set and an interrupt is generated through tf0 output pin. When the higher byte overflows, the **tcon7** flag is set and an interrupt is generated through tf1 output pin. These bits are cleared when appropriate acknowledge signals (int0ack, int1ack) arrive, respectively.

In this mode, the lower byte of Timer 0 or Counter 0 is controlled by the **tcon4** flag which must be set to enable timer operation, and by the int0_n input which stops counting when forced to 0 while the **tmod3** flag is set.

The higher byte is controlled only by the **tcon6** flag which enables counting when set.

20.3 Timer 1

The Timer 1 subcomponent contains Timer 1, a 16-bit register that can be configured for counter or timer operations. It can be accessed as SFRs: TH1 and TL1.

In Timer Mode, Timer 1 is incremented every 12 clock cycles, which means that it counts up after every 12 periods of the clock signal.

In Counter Mode, Timer 1 is incremented when the falling edge is detected at the corresponding input pin – t1 (**JTAG_CLK**) for Timer 0. Since it takes 2 clock cycles to recognize a 1-to-0 event, the maximum input count rate is 1/2 of the CPU clock frequency. There are no restrictions on the duty cycle, however to ensure proper recognition of a 0 or 1 state, an input should be stable for at least 1 CPU clock cycle.

Four operating modes can be selected for Timer 1. Two Special Function registers: TMOD and TCON are used to select the appropriate mode.

The INT1_N signal in the following figures for Timer 1 is connected to External Interrupt 1 (GPIO 0,1, and 2 combined interrupts). If the gate flag **tmod7** is enabled, and the GPIO Interrupt Enable Register has only one GPIO pin enabled, then the counting of Timer 1 can be controlled by the external GPIO pin.

20.3.1 Mode 0 and Mode 1

In Mode 0, Timer 1 is configured as a 13-bit register (”tl1” = 5 bits,”th1” = 8 bits). The upper 3 bits of ”tl1” are unchanged and should be ignored.

 © 2013 Microchip Technology Inc.

In Mode 1, Timer 1 is configured as a 16- bit register.

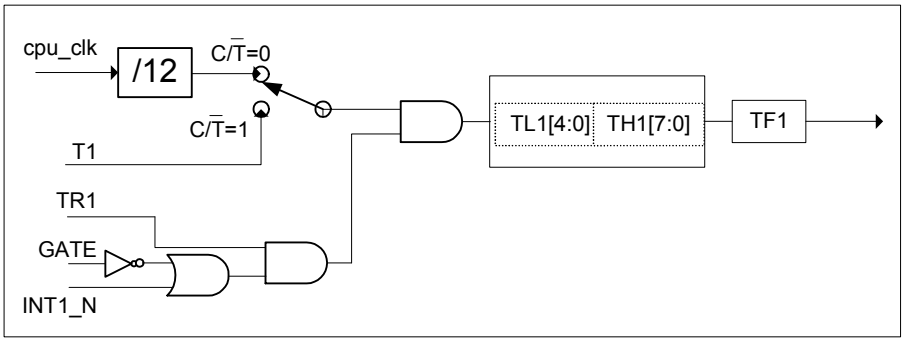

Figure 20.4 Timer 1 in Mode 0 and 1

20.3.1.1 Timer/Counter 1 in Mode 0

This mode is invoked by setting the **tmod[5:4]**=00 flags of the TMOD Register.

In this mode, the count rate is derived from the clk input for the timer option or from the t1 input for counter option. The timer option is selected by clearing the **tmod6** flag, otherwise the counter option is selected.

The Timer 1 or Counter 1 is divided into two 8-bit registers, one lower byte and one higher byte. The lower byte is additionally divided in two parts consisting of a lower 5 bits and a higher 3 bits (only the higher 5 bits are part of the counter). This makes the Timer/Counter 1 a 13-bit counter that is incremented every 12 clock cycles or incremented when the external signal t1 changes its value from 1 to 0.

When Timer/Counter 1 overflows, the **tcon7** flag is set and an interrupt is generated through tf1 output pin. This bit is cleared when an acknowledge signal (int1ack) arrives.

The Timer/Counter 1 may be controlled by software or hardware. The **tcon6** flag must be set to run the Timer 1 Interrupt when int1 stops counting, if the appropriate gate flag **tmod7** is enabled.

See Figure 20.4 "Timer 1 in Mode 0 and 1" on page 249.

20.3.1.2 Timer/Counter 1 in Mode 1

This mode is invoked by setting the **tmod[5:4]**=01 flags of the TMOD Register.

This mode differs from Mode 0 only in that the lower byte is not divided into 5-bit and 3-bit parts. Instead, the entire lower byte works as a counter. The Timer/Counter 1 is a 16-bit counter in Mode 1.

See Figure 20.4 "Timer 1 in Mode 0 and 1" on page 249.

20.3.2 Mode 2

In this mode, the Timer 1 is configured as an 8-bit register with auto-reload.

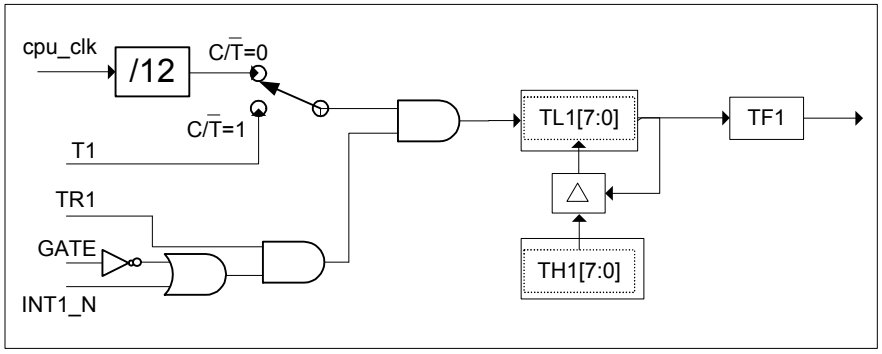

Figure 20.5 Timer 1 in Mode 2

This mode is invoked by setting the **tmod[5:4]**=10 flags of the TMOD Register.

In this mode, the count rate is derived from the clk input for the timer option or from the t1 input for the counter option. The timer option is selected by clearing the **tmod6** flag, otherwise the counter option is selected.

In this mode, the timer/counter works as an 8-bit reload timer/counter. Only the lower byte (TL1) is incremented every 12 clock cycles or when external signal t1 changes its value from 1 to 0.

When lower byte of timer/counter overflows, the **tcon7** flag is set and an interrupt is generated through the tf1 output pin. This bit is cleared when an acknowledge signal (int1ack) arrives. Additionally, when the overflow occurs the new value is fetched from higher byte (TH1) to lower byte (TL1).

The timer/counter may be controlled by software or hardware. The **tcon6** flag must be set to run the Timer 1 Interrupt when int1 stops counting, if the appropriate gate flag **tmod7** is enabled.

20.3.3 Mode 3

This mode is invoked by setting the **tmod[5:4]**=11 flag of TMOD Register.

In this mode, the Timer/Counter 1 is disabled (only Timer/Counter 0 can operate in Mode 3).

20.4 Timer 2

The Timer 2 subcomponent is composed of a Timer 2 that can be configured for either counter or timer operations, and the Compare/Capture Unit which is a sub-component of Timer 2. The Timer 2 can operate as timer, event counter, or gated timer.

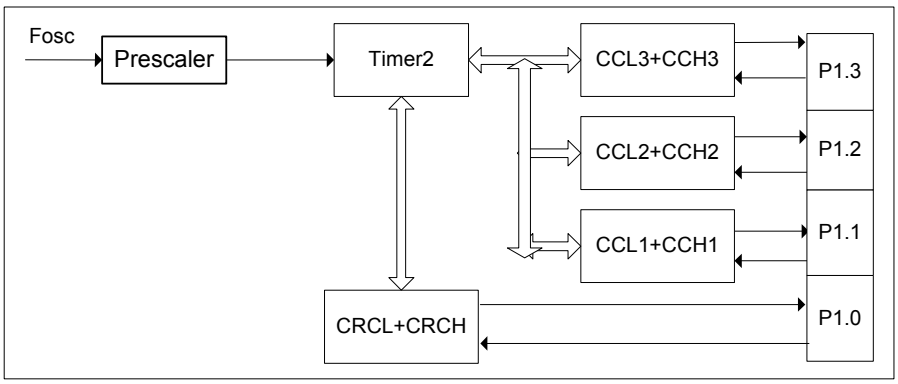

Figure 20.6 Timer 2 Block Diagram

20.4.1 Timer Mode

This mode is invoked by setting the **t2i0**=1 and **t2i1**=0 flags of the t2con Register. In this mode, the count rate is derived from the clk input.

The Timer 2 is incremented every 12 or 24 clock cycles depending on the 2:1 prescaler. The Prescaler Mode is selected by bit **t2ps** of the t2con Register. When **t2ps**=0, the timer counts up every 12 clock cycles, otherwise every 24 cycles.

20.4.2 Event Counter Mode

This mode is invoked by setting the **t2i0**=0 and **t2i1**=1 flags of the t2con Register. In this mode, the Timer 2 is incremented when the external signal t2 changes its value from 1 to 0. The t2 input is sampled at every rising edge of the clock. The Timer 2 is incremented in the cycle following the one in which the transition was detected. The maximum count rate is ½ of the clock frequency.

20.4.3 Gated Timer Mode

This mode is invoked by setting the **t2i0**=1 and **t2i1**=1 flags of the t2con Register. In this mode, the Timer 2 is incremented every 12 or 24 clock cycles (depending on the **t2ps** flag) but additionally it is gated by the external signal t2. When t2=0, the Timer 2 is stopped. The t2 input is sampled into a flip-flop and then it blocks Timer 2 from incrementing.

20.4.4 Timer 2 Reload

A 16-bit reload from the crc Register can be executed in two modes:

- Reload Mode 0: Reload signal is generated by Timer 2 overflow (auto reload)

 © 2013 Microchip Technology Inc.

- Reload Mode 1: Reload signal is generated by negative transition at the corresponding input pin t2ex.

20.4.5 Compare Function

The Compare/Capture Unit consists of four registers: cc1, cc2, cc3, and crc. Each of these registers can be configured to work in Comparator Mode. In this mode, the value stored in register is compared with the contents of Timer 2. The comparator's outputs drive four low ordered bits of ccubus where:

- The output of the comparator associated with the register crc is **ccubus.0**
- The output of the comparator associated with the register cc1 is **ccubus.1**
- The output of the comparator associated with the register cc2 is **ccubus.2**
- The output of the comparator associated with the register cc3 is **ccubus.3**

There are two compare modes selected by bit **t2cm** in t2con Register.

20.4.5.1 Compare Mode 0

The Compare Mode 0 is invoked by setting bit **t2cm**=0 of t2con Register. In Mode 0, when the value in Timer 2 equals the value of the compare register, the comparator output changes from low to high. It goes back low on a Timer 2 overflow. The Figure 20.7, "Timer 2 in Compare Mode 0" illustrates the function of compare Mode 0.

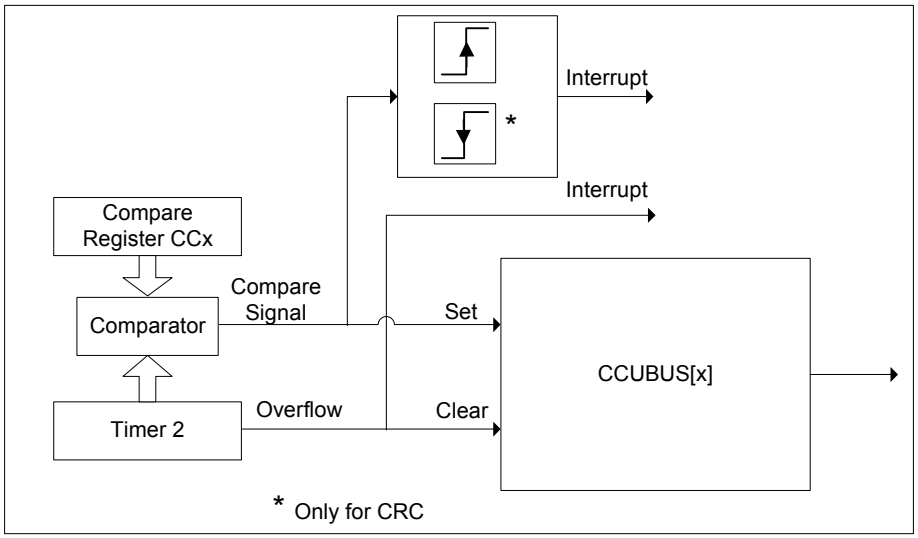

Figure 20.7 Timer 2 in Compare Mode 0

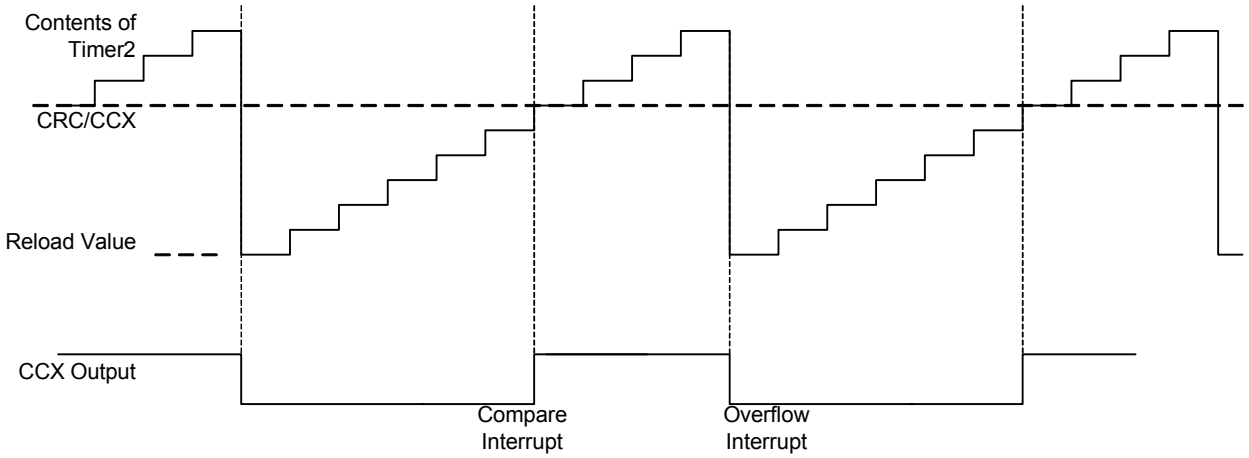

Figure 20.8 Compare Mode 0 Operation

20.4.5.2 Compare Mode 1

The Compare Mode 1 is invoked by setting bit **t2cm=**1 of the t2con Register. In Compare Mode 1, the transition of the output signal can be determined by software. A Timer 2 overflow causes no output change. In this mode, both transitions of the output signal can be controlled. Figure below shows a functional diagram of a register configuration in Compare Mode 1. In Compare Mode 1 the value is written first to the “Shadow Register”, and when the compare signal goes active this value is transferred to the output register.

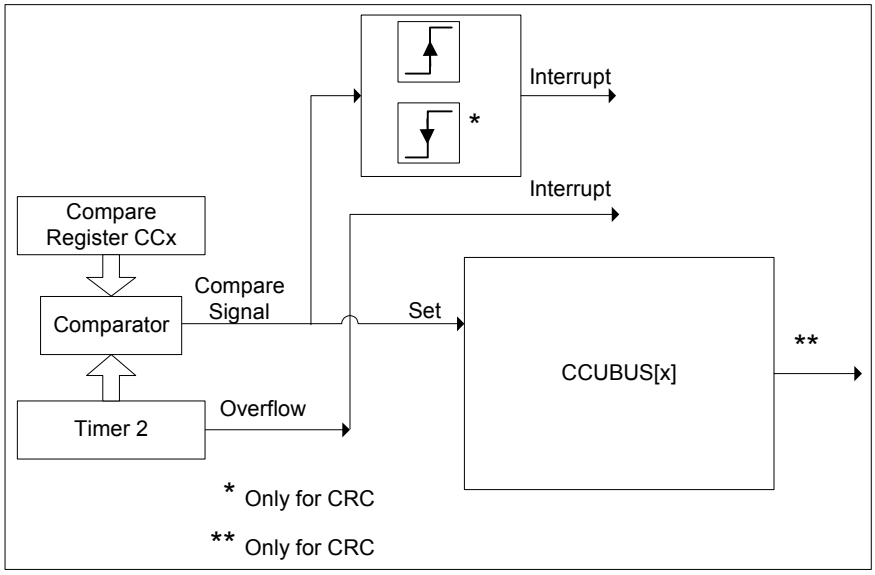

Figure 20.9 Timer 2 in Compare Mode 1

20.5 Extended Watchdog_Timer

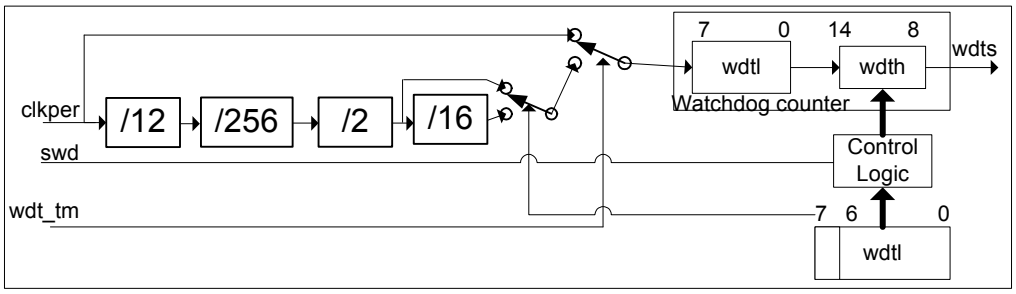

Figure 20.10 Extended Watchdog Block Diagram

The Watchdog Timer is a 15-bit counter that is incremented every $24*2^8$ or $384*2^8$ clock cycles. It is used to provide the system supervision in case of software or hardware upset. If the software is not able to refresh the watchdog timer, an internal reset is generated.

The watchdog timer consists of a 15-bit counter (not accessible as SFR), reload register WDTREL, prescalers by 2 and 16, and control logic.

The count rate of the watchdog timer depends on the MSB of the WDTREL Register. When the **WDTREL.7=**1, the watchdog timer is incremented every $12*2^8*32$ clock cycles, which makes the whole period to be $12*2^8*32*256*128$ clock cycles long.

When the **WDTREL.7=0**, the watchdog timer is incremented every $12*2^8*2$ clock cycles, which makes the whole period to be $12*2^8*2*256*128$ clock cycles long.

When the wdt_tm test mode input is set to 1, the count rate of the watchdog timer is clkper clock rate (all dividers – 1/12, $1/2^8$, ½, 1/16 are omitted) to shorten the time required for the Watchdog to overflow.

© 2013 Microchip Technology Inc.

20.5.1 Enabling the Watchdog

The watchdog timer is started by setting **swdt** flag of the IEN1 Register. Starting the watchdog timer by only setting the **swdt** flag does not reload the watchdog timer.

The SEC1110 and SEC1210 watchdog timer cannot be stopped once it is started. Only a power down (or STOP Mode) and subsequent power on reset clears the watchdog timer.

When the watchdog counter enters the state of 7FFCh, the internal reset is generated as the **wdts** output is active. The **wdts** flag of the IP0 Register is also set upon the watchdog timer reset, while it is cleared upon an external hardware reset signal. The **wdts** signal does not reset the Watchdog, which remains running. When it overflows from 7FFFh to 0000h, the **wdts** output is deactivated, while the **wdts** flag of the ip0 Register remains set to allow the software to determine whether the reset was caused by an external input or by a Watchdog timeout.

The **wdts** flag of the IP0 Register can be also modified by software.

20.5.2 Refreshing the Watchdog Timer

The watchdog timer must be refreshed regularly to prevent a reset request signal (**wdts**) from becoming active. This requirement imposes obligation on the programmer to issue two followed instructions. The first instruction sets the **wdt** bit of the IEN0 Register and the second one sets the **swdt** flag of the IEN1 Register. The maximum allowed delay between setting **wdt** and **swdt** is 1 instruction cycle (i.e., the instructions that set both flags cannot be separated by any other instruction). If this is violated, then the **wdt** flag is automatically cleared, which prevents the watchdog timer from being reloaded regardless of later setting the **swdt** flag. The 7 high-order bits of the watchdog timer are reloaded with the contents of the WDTREL Register. The bigger the value of WDTREL the shorter the period required to refresh the watchdog timer.

Chapter 21 Timing Diagrams

21.1 Serial Port Data Timing

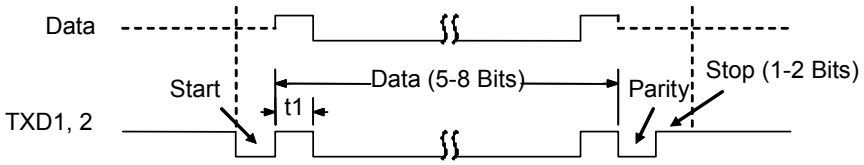

Figure 21.1 Serial Port Data

Table 21.1 Serial Port Data Parameters

NAME	DESCRIPTION	MIN	TYP	MAX	UNITS
t1	Serial Port Data Bit Time		t_{BR} (Note 21.1)		nsec

Note 21.1 t_{BR} is 1/Baud Rate. The Baud Rate is programmed through the divisor latch registers. Baud Rates have percentage errors indicated in UART Baud Rates (1.8432 MHz source).

21.2 JTAG Interface Timing

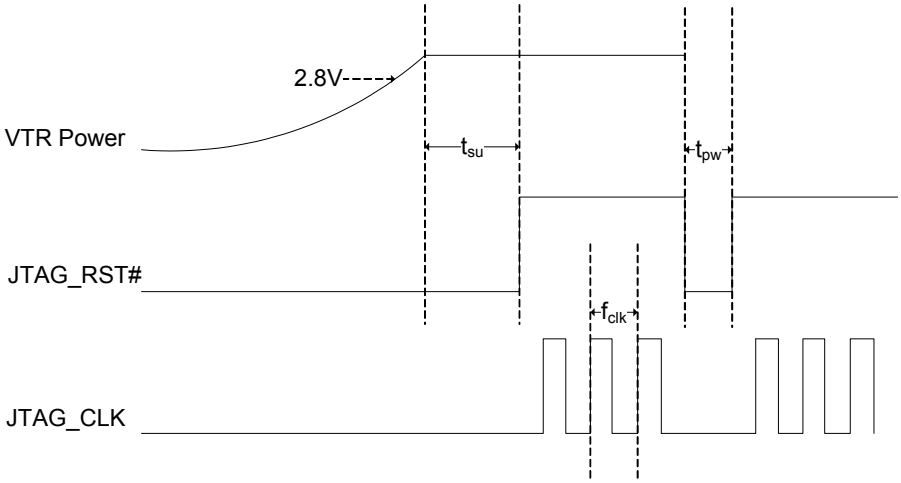

Figure 21.2 JTAG Power-Up and Asynchronous Reset Timing

© 2013 Microchip Technology Inc.

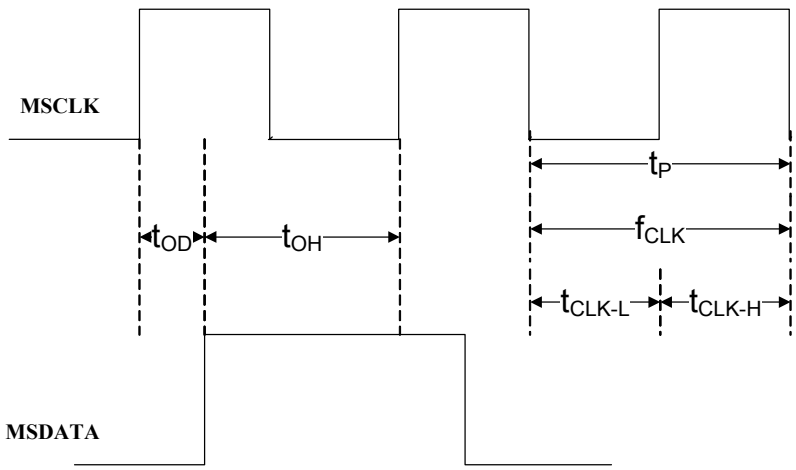

Figure 21.3 JTAG Setup and Hold Parameters

Table 21.2 JTAG Interface Timing Parameters

NAME	DESCRIPTION	MIN	TYP	MAX	UNITS
f_{clk}	JTAG_CLK frequency (see note)			Fcpu_clk / 4	MHz
t_{OD}	TDO output delay after falling edge of TCLK.	5		10	nsec
t_{OH}	TDO hold time after falling edge of TCLK	1 TCLK - t_{OD}			nsec
t_{IS}	TDI setup time before rising edge of TCLK.			0	nsec
t_{IH}	TDI hold time after rising edge of TCLK.	5		10	nsec

Note 21.2 f_{clk} is the maximum frequency to access a JTAG Register. Additional JTAG_CLK frequency constraints are described in Chapter 18, "TEST Modes, JTAG, and XNOR," on page 234 as well as Section 13.3.2, "Clocks," on page 166.

Chapter 22 Package Outline

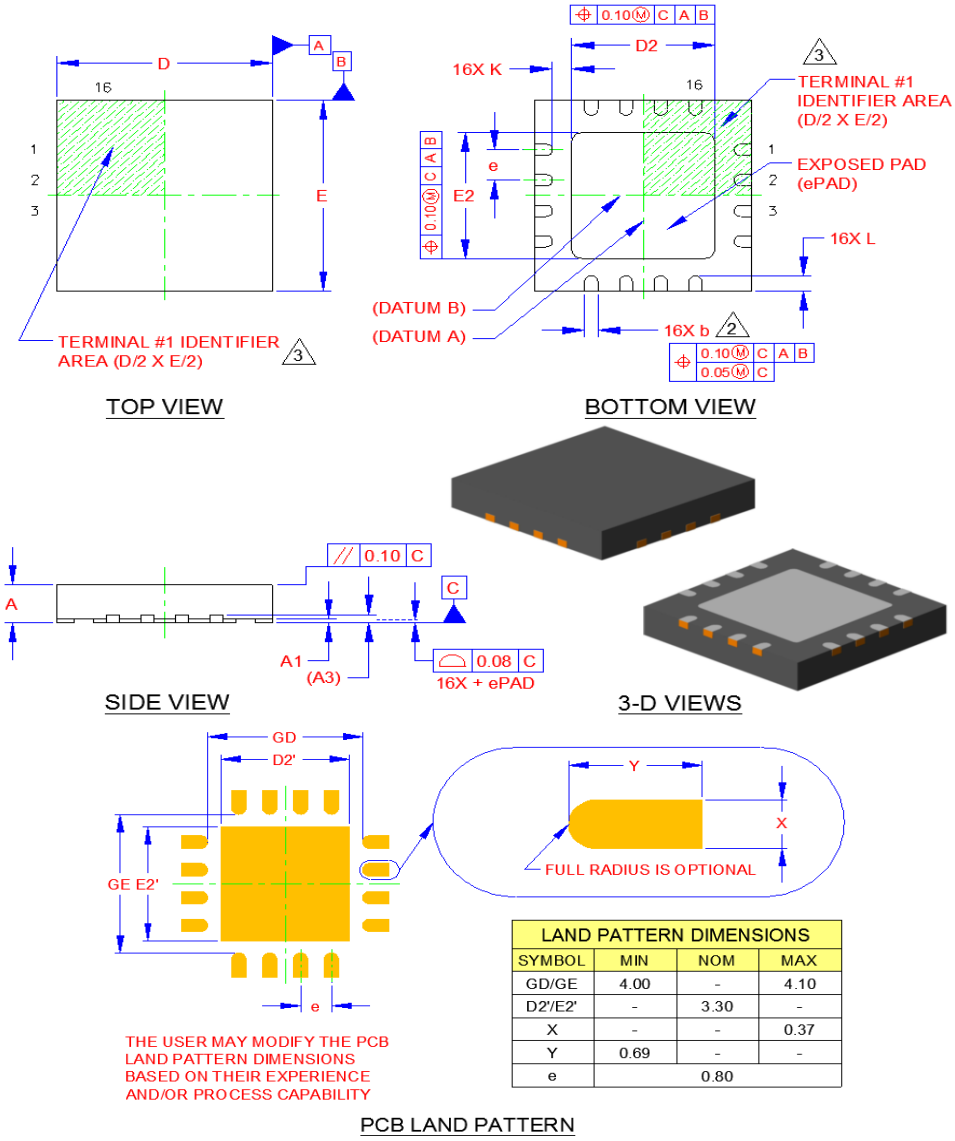

LAND PATTERN DIMENSIONS			
SYMBOL	MIN	NOM	MAX
GD/GE	4.00	-	4.10
D2'/E2'	-	3.30	-
X	-	-	0.37
Y	0.69	-	-
e	0.80		

Figure 22.1 SEC1110 Package Outline

Table 22.1 Package Parameters

	MIN	NOMINAL	MAX	REMARKS
A	0.80	0.90	1.00	Overall Package Height
A1	0	0.02	0.05	Standoff
A3	0.20 REF			Lead-Frame Thickness
D/E	4.90	5.00	5.10	X/Y Body Size
D2/E2	3.20	3.30	3.40	X/Y Exposed Pad Size
L	0.35	0.40	0.45	Terminal Length
b	0.25	0.30	0.35	Terminal Width (Note 2)
K	0.35	0.45	-	Terminal to Pad Distance
e	0.80 BSC			Terminal Pitch

© 2013 Microchip Technology Inc.

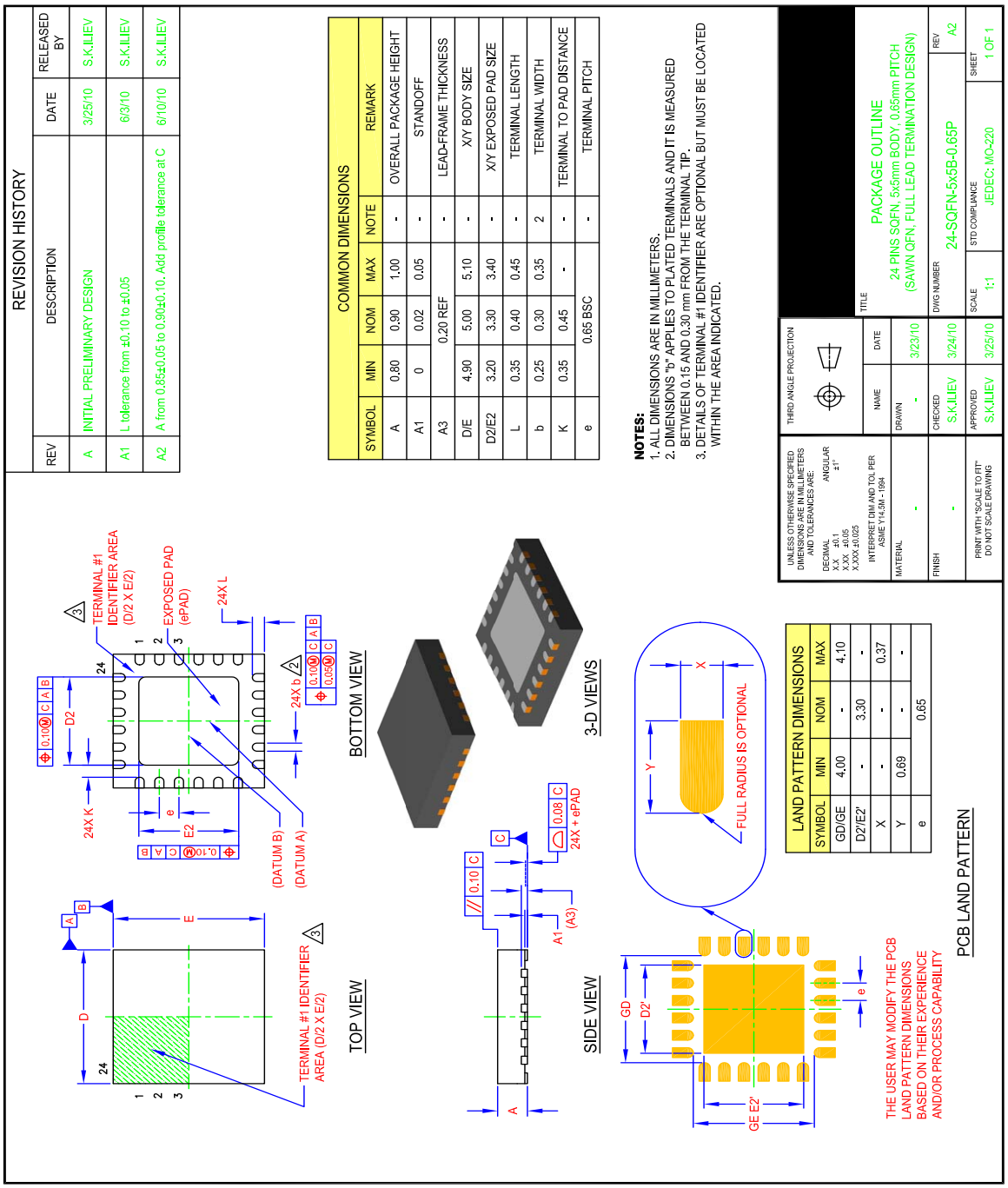

Figure 22.2 SEC1210 Package Drawing

22.1 Pb-Free Reflow

Below are general guidelines for the Pb-free reflow, to be used as an initial set up. The specific reflow profile depends on the PCB, other components thermal mass, as well as on the solder paste.

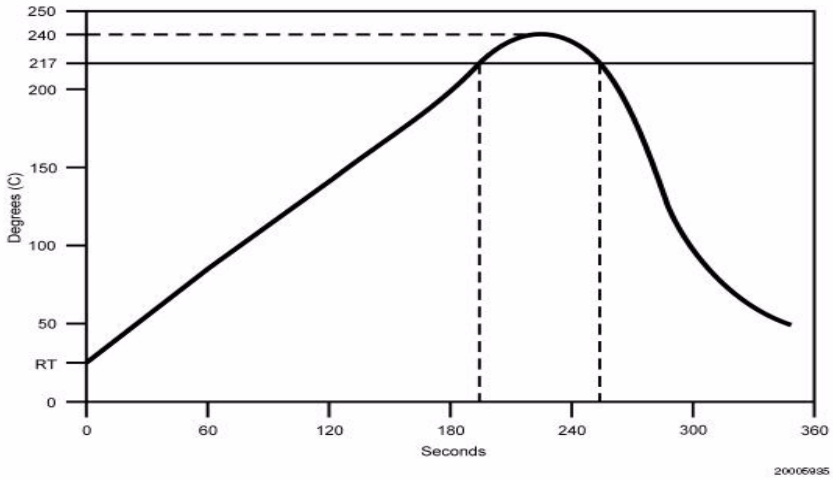

Profile Elements	Convection or IR
Ramp rate (RT to Peak temp)	0.8 - 1.2 °C/s
Time above liquidus (217 °C)	35 - 80 seconds
Peak temperature range	235 - 240 °C typical, (260 °C max)
Ramp-down rate to RT	1 - 2°C/s typical, (6 °C/s max)
Note: For details, please refer to solder paste manufacturer's recommendation.	

Figure 22.3 QFN Pb-free Reflow Guideline

© 2013 Microchip Technology Inc.

Chapter 23 Revision History

Table 23.1 Revision History

REVISION LEVEL & DATE	SECTION/FIGURE/ENTRY	CORRECTION
SEC1110/SEC1210 Revision A replaces the previous SMSC version, Revision 1.3		■ Added industrial temperature options and additional ordering codes ■ Fixed misc. errors and typos. ■ Removed errant references to non SEC1110/SEC1210 parts ■ Updated Appendix A acronyms section ■ Added Appendix A definitions section

Appendix A (Acronyms & Definitions)

A.1 Acronyms

ATR: Answer to Reset

BGT: Block Guard Time

BWT: Block Waiting Time

CRC: Cyclic Redundancy Checking

CWT: Character Waiting Time

D: Baud Rate Adjustment Integer

EGT: Extra Guard Time

EMV: Originally “Europay, MasterCard and VISA”, now serves as a standard for credit/debit cards authentication

ESD: Electrostatic Discharge

ETU: Elementary Time Unit

F: Clock Rate Conversion Integer

f: Frequency Value of the Clock Signal Provided to the Card by the Interface Device

FIFO: First In, First Out

H: High State

I^2C®: Inter-Integrated Circuit[1]

JTAG: Joint Test Action Group

MTU: Maximum Transmission Unit

NRZI: Non Return to Zero, Inverted

NRZ: Non Return to Zero

OCS: Over-Current Sense

PCB: Printed Circuit Board

PHY: Physical Layer

PLL: Phase-Locked Loop

QFN: Quad Flat No Leads

RoHS: Restriction of Hazardous Substances Directive

SC: Smart Card

SCL: Serial Clock

SIE: Serial Interface Engine

SFR: Special Function Register

SC: Smart Card

SPI: Serial Peripheral Interface

UART: Universal Asynchronous Receiver/Transmitter

WDT: Watch Dog Timer

WIC: Wake-up Interrupt Controller

WTX: Waiting Time Extension

1. I^2C is a registered trademark of Philips Corporation.

© 2013 Microchip Technology Inc.

A.2 Definitions

Endpoint: In USB, an endpoint is a unidirectional data port.

Channel: A channel is made up of a pair of endpoints. A channel is capable of bidirectional data movement.

EPx_RD: An IN endpoint. Data flows from the device to the USB host.

EPx_WR: An OUT endpoint. Data flows from the USB Host to the device.

Note: In all cases RD refers to reading main memory, WR refers to writing to main memory.

Appendix B (References)

[1] Universal Serial Bus Specification, Version 2.0, April 27, 2000 (12/7/2000 and 5/28/2002 Errata)
USB Implementers Forum, Inc. http://www.usb.org

[2] JEDEC Specifications: JESD76-2 (June 2001) and J-STD-020D.1 (March 2008)
JEDEC Global Standards for the Microelectronics Industry.http://www.jedec.org/standards-documents

[3] EMV Integrated Circuit Card Specifications for Payment Systems, Book 1 “Application Independent ICC to Terminal Interface Requirements”, Version 4.3, November 2011

[4] ETSI TS 102 221 V8.3.0 (2009-08)

[5] ISO/IEC 7816-3 Third edition, 2006-11-01

© 2013 Microchip Technology Inc.

Note the following details of the code protection feature on Microchip devices:

- Microchip products meet the specification contained in their particular Microchip Data Sheet.
- Microchip believes that its family of products is one of the most secure families of its kind on the market today, when used in the intended manner and under normal conditions.
- There are dishonest and possibly illegal methods used to breach the code protection feature. All of these methods, to our knowledge, require using the Microchip products in a manner outside the operating specifications contained in Microchip's Data Sheets. Most likely, the person doing so is engaged in theft of intellectual property.
- Microchip is willing to work with the customer who is concerned about the integrity of their code.
- Neither Microchip nor any other semiconductor manufacturer can guarantee the security of their code. Code protection does not mean that we are guaranteeing the product as "unbreakable."

Code protection is constantly evolving. We at Microchip are committed to continuously improving the code protection features of our products. Attempts to break Microchip's code protection feature may be a violation of the Digital Millennium Copyright Act. If such acts allow unauthorized access to your software or other copyrighted work, you may have a right to sue for relief under that Act.

Information contained in this publication regarding device applications and the like is provided only for your convenience and may be superseded by updates. It is your responsibility to ensure that your application meets with your specifications. MICROCHIP MAKES NO REPRESENTATIONS OR WARRANTIES OF ANY KIND WHETHER EXPRESS OR IMPLIED, WRITTEN OR ORAL, STATUTORY OR OTHERWISE, RELATED TO THE INFORMATION, INCLUDING BUT NOT LIMITED TO ITS CONDITION, QUALITY, PERFORMANCE, MERCHANTABILITY OR FITNESS FOR PURPOSE**.** Microchip disclaims all liability arising from this information and its use. Use of Microchip devices in life support and/or safety applications is entirely at the buyer's risk, and the buyer agrees to defend, indemnify and hold harmless Microchip from any and all damages, claims, suits, or expenses resulting from such use. No licenses are conveyed, implicitly or otherwise, under any Microchip intellectual property rights.

Trademarks

The Microchip name and logo, the Microchip logo, dsPIC, FlashFlex, KEELOQ, KEELOQ logo, MPLAB, PIC, PICmicro, PICSTART, PIC^{32} logo, rfPIC, SST, SST Logo, SuperFlash and UNI/O are registered trademarks of Microchip Technology Incorporated in the U.S.A. and other countries.

FilterLab, Hampshire, HI-TECH C, Linear Active Thermistor, MTP, SEEVAL and The Embedded Control Solutions Company are registered trademarks of Microchip Technology Incorporated in the U.S.A.

Silicon Storage Technology is a registered trademark of Microchip Technology Inc. in other countries.

Analog-for-the-Digital Age, Application Maestro, BodyCom, chipKIT, chipKIT logo, CodeGuard, dsPICDEM, dsPICDEM.net, dsPICworks, dsSPEAK, ECAN, ECONOMONITOR, FanSense, HI-TIDE, In-Circuit Serial Programming, ICSP, Mindi, MiWi, MPASM, MPF, MPLAB Certified logo, MPLIB, MPLINK, mTouch, Omniscient Code Generation, PICC, PICC-18, PICDEM, PICDEM.net, PICkit, PICtail, REAL ICE, rfLAB, Select Mode, SQI, Serial Quad I/O, Total Endurance, TSHARC, UniWinDriver, WiperLock, ZENA and Z-Scale are trademarks of Microchip Technology Incorporated in the U.S.A. and other countries.

SQTP is a service mark of Microchip Technology Incorporated in the U.S.A.

GestIC and ULPP are registered trademarks of Microchip Technology Germany II GmbH & Co. KG, a subsidiary of Microchip Technology Inc., in other countries.

A more complete list of registered trademarks and common law trademarks owned by Standard Microsystems Corporation ("SMSC") is available at: www.smsc.com. The absence of a trademark (name, logo, etc.) from the list does not constitute a waiver of any intellectual property rights that SMSC has established in any of its trademarks.

All other trademarks mentioned herein are property of their respective companies.

© 2013, Microchip Technology Incorporated, Printed in the U.S.A., All Rights Reserved.

ISBN: 9781620774106

QUALITY MANAGEMENT SYSTEM
CERTIFIED BY DNV
═ ISO/TS 16949 ═

Microchip received ISO/TS-16949:2009 certification for its worldwide headquarters, design and wafer fabrication facilities in Chandler and Tempe, Arizona; Gresham, Oregon and design centers in California and India. The Company's quality system processes and procedures are for its PIC® MCUs and dsPIC® DSCs, KEELOQ® code hopping devices, Serial EEPROMs, microperipherals, nonvolatile memory and analog products. In addition, Microchip's quality system for the design and manufacture of development systems is ISO 9001:2000 certified.

Worldwide Sales and Service

AMERICAS

Corporate Office
2355 West Chandler Blvd.
Chandler, AZ 85224-6199
Tel: 480-792-7200
Fax: 480-792-7277
Technical Support:
http://www.microchip.com/support
Web Address:
www.microchip.com

Atlanta
Duluth, GA
Tel: 678-957-9614
Fax: 678-957-1455

Boston
Westborough, MA
Tel: 774-760-0087
Fax: 774-760-0088

Chicago
Itasca, IL
Tel: 630-285-0071
Fax: 630-285-0075

Cleveland
Independence, OH
Tel: 216-447-0464
Fax: 216-447-0643

Dallas
Addison, TX
Tel: 972-818-7423
Fax: 972-818-2924

Detroit
Farmington Hills, MI
Tel: 248-538-2250
Fax: 248-538-2260

Indianapolis
Noblesville, IN
Tel: 317-773-8323
Fax: 317-773-5453

Los Angeles
Mission Viejo, CA
Tel: 949-462-9523
Fax: 949-462-9608

Santa Clara
Santa Clara, CA
Tel: 408-961-6444
Fax: 408-961-6445

Toronto
Mississauga, Ontario, Canada
Tel: 905-673-0699
Fax: 905-673-6509

ASIA/PACIFIC

Asia Pacific Office
Suites 3707-14, 37th Floor
Tower 6, The Gateway
Harbour City, Kowloon
Hong Kong
Tel: 852-2401-1200
Fax: 852-2401-3431

Australia - Sydney
Tel: 61-2-9868-6733
Fax: 61-2-9868-6755

China - Beijing
Tel: 86-10-8569-7000
Fax: 86-10-8528-2104

China - Chengdu
Tel: 86-28-8665-5511
Fax: 86-28-8665-7889

China - Chongqing
Tel: 86-23-8980-9588
Fax: 86-23-8980-9500

China - Hangzhou
Tel: 86-571-2819-3187
Fax: 86-571-2819-3189

China - Hong Kong SAR
Tel: 852-2943-5100
Fax: 852-2401-3431

China - Nanjing
Tel: 86-25-8473-2460
Fax: 86-25-8473-2470

China - Qingdao
Tel: 86-532-8502-7355
Fax: 86-532-8502-7205

China - Shanghai
Tel: 86-21-5407-5533
Fax: 86-21-5407-5066

China - Shenyang
Tel: 86-24-2334-2829
Fax: 86-24-2334-2393

China - Shenzhen
Tel: 86-755-8864-2200
Fax: 86-755-8203-1760

China - Wuhan
Tel: 86-27-5980-5300
Fax: 86-27-5980-5118

China - Xian
Tel: 86-29-8833-7252
Fax: 86-29-8833-7256

China - Xiamen
Tel: 86-592-2388138
Fax: 86-592-2388130

China - Zhuhai
Tel: 86-756-3210040
Fax: 86-756-3210049

ASIA/PACIFIC

India - Bangalore
Tel: 91-80-3090-4444
Fax: 91-80-3090-4123

India - New Delhi
Tel: 91-11-4160-8631
Fax: 91-11-4160-8632

India - Pune
Tel: 91-20-3019-1500

Japan - Osaka
Tel: 81-6-6152-7160
Fax: 81-6-6152-9310

Japan - Tokyo
Tel: 81-3-6880- 3770
Fax: 81-3-6880-3771

Korea - Daegu
Tel: 82-53-744-4301
Fax: 82-53-744-4302

Korea - Seoul
Tel: 82-2-554-7200
Fax: 82-2-558-5932 or
82-2-558-5934

Malaysia - Kuala Lumpur
Tel: 60-3-6201-9857
Fax: 60-3-6201-9859

Malaysia - Penang
Tel: 60-4-227-8870
Fax: 60-4-227-4068

Philippines - Manila
Tel: 63-2-634-9065
Fax: 63-2-634-9069

Singapore
Tel: 65-6334-8870
Fax: 65-6334-8850

Taiwan - Hsin Chu
Tel: 886-3-5778-366
Fax: 886-3-5770-955

Taiwan - Kaohsiung
Tel: 886-7-213-7828
Fax: 886-7-330-9305

Taiwan - Taipei
Tel: 886-2-2508-8600
Fax: 886-2-2508-0102

Thailand - Bangkok
Tel: 66-2-694-1351
Fax: 66-2-694-1350

EUROPE

Austria - Wels
Tel: 43-7242-2244-39
Fax: 43-7242-2244-393

Denmark - Copenhagen
Tel: 45-4450-2828
Fax: 45-4485-2829

France - Paris
Tel: 33-1-69-53-63-20
Fax: 33-1-69-30-90-79

Germany - Munich
Tel: 49-89-627-144-0
Fax: 49-89-627-144-44

Italy - Milan
Tel: 39-0331-742611
Fax: 39-0331-466781

Netherlands - Drunen
Tel: 31-416-690399
Fax: 31-416-690340

Spain - Madrid
Tel: 34-91-708-08-90
Fax: 34-91-708-08-91

UK - Wokingham
Tel: 44-118-921-5869
Fax: 44-118-921-5820

08/20/13

© 2013 Microchip Technology Inc.

Мы молодая и активно развивающаяся компания в области поставок электронных компонентов. Мы поставляем электронные компоненты отечественного и импортного производства напрямую от производителей и с крупнейших складов мира.

Благодаря сотрудничеству с мировыми поставщиками мы осуществляем комплексные и плановые поставки широчайшего спектра электронных компонентов.

Собственная эффективная логистика и склад в обеспечивает надежную поставку продукции в точно указанные сроки по всей России.

Мы осуществляем техническую поддержку нашим клиентам и предпродажную проверку качества продукции. На все поставляемые продукты мы предоставляем гарантию .

Осуществляем поставки продукции под контролем ВП МО РФ на предприятия военно-промышленного комплекса России , а также работаем в рамках 275 ФЗ с открытием отдельных счетов в уполномоченном банке. Система менеджмента качества компании соответствует требованиям ГОСТ ISO 9001.

Минимальные сроки поставки, гибкие цены, неограниченный ассортимент и индивидуальный подход к клиентам являются основой для выстраивания долгосрочного и эффективного сотрудничества с предприятиями радиоэлектронной промышленности, предприятиями ВПК и научно-исследовательскими институтами России.

С нами вы становитесь еще успешнее!

Наши контакты:

Телефон: +7 812 627 14 35

Электронная почта: sales@st-electron.ru

Адрес: 198099, Санкт-Петербург, Промышленная ул, дом № 19, литера Н, помещение 100-Н Офис 331