MIC4832

Low Noise 220V_{PP} EL Driver

General Description

The MIC4832 is a low noise 220V_{PP} electroluminescent lamp (EL) driver. Using advanced Bipolar, CMOS, DMOS (BCD) technology, the MIC4832 integrates a high voltage boost converter and an H-bridge driver for driving a large EL lamp. The MIC4832 can drive large panel displays for mobile phones, multimedia players or automotive electronics where EL panels are used for backlighting.

The MIC4832 offers design flexibility with adjustable lamp and boost converter frequencies, simply by applying external resistors. A new H-Bridge design reduces audible noise by creating smoother AC voltage across the EL panel.

The MIC4832 is offered in MLF® 3mm x 3mm and MSOP-8 lead-free and RoHS-compliant packaging with a -40°C to 85°C junction temperature range.

Datasheets and support documentation can be found on Micrel's web site at: www.micrel.com.

Features

- 1.8V to 5.5V DC input voltage
- 220Vpp output voltage capable
- Low audible noise EL drive waveform
- Supports EL panel sizes up to 3in^2 (19cm^2)
- Low 45µA operating supply current
- Small inductor size with low profile (220uH)
- Tiny 8-pin 3mm x 3mm MLF® package
- Adjustable boost converter frequency
- Adjustable EL lamp frequency
- 10nA shutdown current

Applications

- LCD panel backlight
- Mobile Phones
- PDAs
- Pagers
- Calculators
- Multimedia Players
- Remote controls
- GPS Receivers

Typical Application

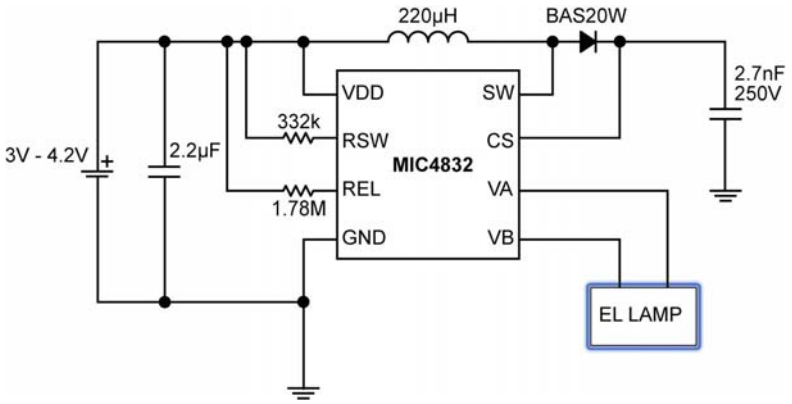

Low Noise EL Driver

MLF and *Micro*LeadFrame is a registered trademark of Amkor Technologies, Inc.

Ordering Information

Part Number	Junction Temp. Range	Package	Lead Finish
MIC4832YML	–40° to +85°C	8-Pin 3mm × 3mm MLF®	RoHS Compliant / Pb-Free / Halogen Free*
MIC4832YMM	–40° to +85°C	8-Pin MSOP	RoHS Compliant / Pb-Free

Note

*MLF® is a GREEN RoHS-compliant package. Lead finish is NiPdAu. Mold compound is Halogen Free.

Pin Configuration

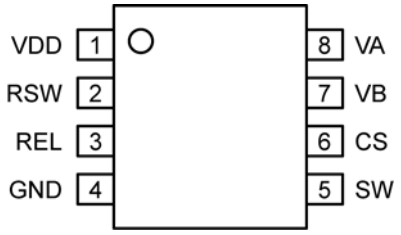

8-Pin MSOP (MM)

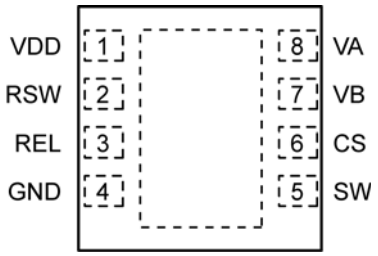

8-Pin 3mm × 3mm MLF® (ML)

Pin Description

Pin Number	Pin Name	Pin Function
1	VDD	Supply (Input): 1.8V to 5.5V for internal circuitry.
2	RSW	Switch Resistor (External Component): Set switch frequency of the internal power MOSFET by connecting an external resistor to VDD. Connecting the external resistor to GND disables the switch oscillator and shuts down the device.
3	REL	EL Resistor (External Component): Set EL frequency of the internal H-bridge driver by connecting an external resistor to VDD. Connecting the external resistor to GND disables the EL oscillator.
4	GND	Ground
5	SW	Switch Node (Input): Internal high-voltage power MOSFET drain.
6	CS	Regulated Boost Output (External Component): Connect to the output capacitor of the boost regulator and connect to the cathode of the diode.
7	VB	EL Output: Connect to one end of the EL lamp. Polarity is not important.
8	VA	EL Output: Connect to one end of the EL lamp. Polarity is not important.

Absolute Maximum Ratings[1]

Supply Voltage (V_{DD}) ..... –0.5V to 6.0V
Output Voltage (V_{CS}) ..... –0.5V to 120V
EL Lamp Terminals (V_A, V_B) ..... V_{CS} + 3V
Switch Voltage (Vsw) ..... -0.5V to 120V
Frequency Control Voltage
(V_{RSW}, V_{REL}) ..... –0.5V to (V_{DD} +0.3V)
Storage Temperature (T_S) ..... –65°C to +150°C
ESD Rating[4] 2kV

Operating Ratings[2]

Supply Voltage (V_{DD}) ..... +1.8V to +5.5V
Lamp Drive Frequency (f_{EL}) ..... 60Hz to 1000Hz
Switching Frequency (f_{SW}) ..... 65kHz to 250kHz
Ambient Temperature (T_A) ..... –40°C to +85°C
Package Thermal Resistance[3]
MSOP (θ_{JA}) ..... 206°C/W
MLF® (θ_{JA}) ..... 63°C/W

Electrical Characteristics[5]

V_{IN} = V_{DD} = 3.0V, R_{SW} = 338KΩ, R_{EL} = 1.78MΩ. T_A = 25°C unless otherwise specified. **Bold** values indicate –40°C ≤ T_A ≤ +85°C

Parameter	Condition	Min	Typ	Max	Units
On-resistance	I_{SW} = 100mA		3.8	7	Ohm
CS Voltage Variation		**91**	105	**119**	
Enable Input Low Voltage (turn-off)	V_{DD} = 1.8V to 5.5V			0.5	V
Enable Input High Voltage (turn-on)	V_{DD} = 1.8V to 5.5V	VDD-0.5			V
Shutdown current	R_{SW} Resistor = LOW; R_{EL} Resistor = LOW; V_{DD} = 5.5V		0.01	**0.5**	µA
Input supply current	R_{SW} Resistor = HIGH; R_{EL} Resistor = HIGH; V_{CS} = 110V; V_A, V_B OPEN		45	**75**	µA
Input current including inductor	V_{IN} = V_{DD} = 3.2V; R_{SW} = 338KΩ, R_{EL} = 1.78MΩ; L=220µH; R_{OUT} =10kΩ; Lamp = 2in^2		24		mA
V_A – V_B output drive frequency	R_{EL} = 1.78MΩ	158	200	242	Hz
Switching transistor frequency	R_{SW} = 338KΩ	90	112	134	kHz
Switching transistor duty cycle			90		%

Notes:

1. Exceeding the absolute maximum rating may damage the device.
2. The device is not guaranteed to function outside its operating rating.
3. The maximum allowable power dissipation of any T_A (ambient temperature) is $P_D(max) = (T_J(max) – T_A) / \theta_{JA}$. Exceeding the maximum allowable power dissipation will result in excessive die temperature.
4. Devices are ESD sensitive. Handling precautions recommended. Human body model, 1.5k in series with 100pF.
5. Specification for packaged product only.

Typical Characteristics

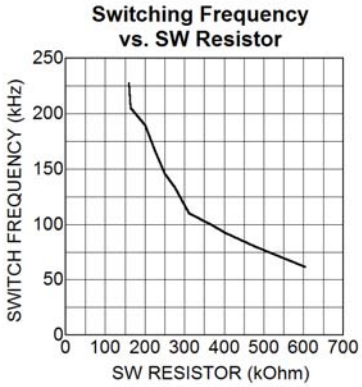

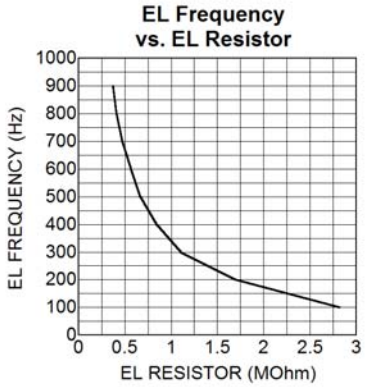

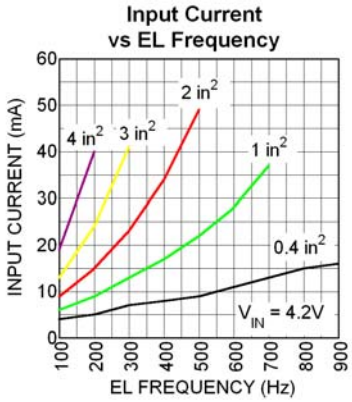

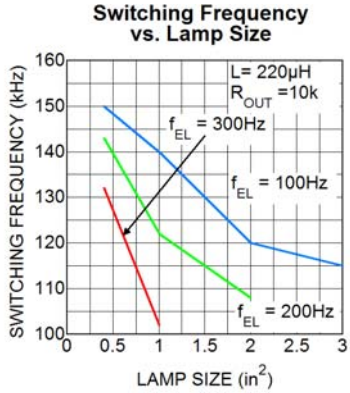

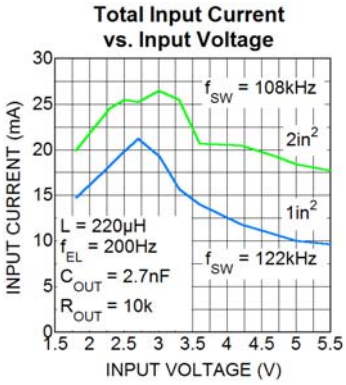

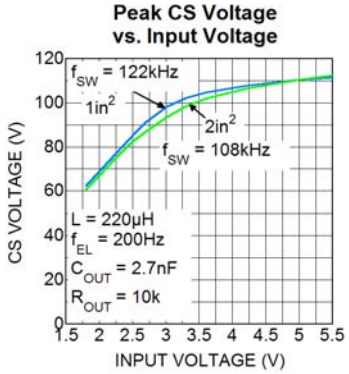

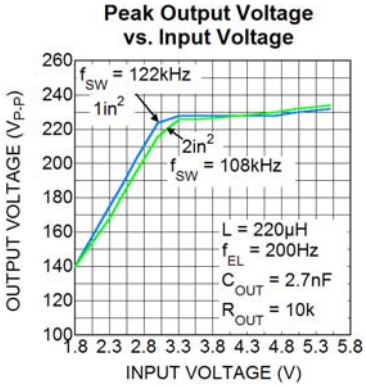

Functional Diagram

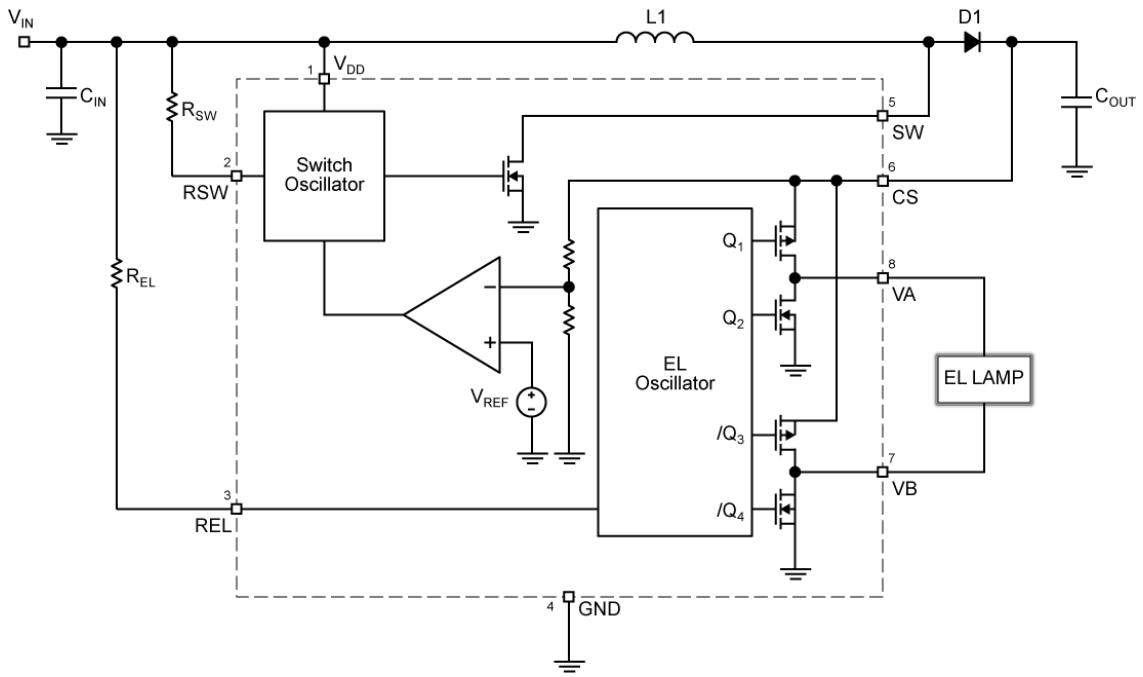

Figure 1. MIC4832 Block Diagram

Functional Description

Overview

The MIC4832 is a high-voltage EL driver with an AC output voltage of 220V peak-to-peak capable of driving EL lamps up to 3 in^2. Input supply current for the MIC4832 is typically 45µA reducing to 10nA in shutdown. The high voltage EL driver has two internal oscillators to control the switching MOSFET and the H-bridge driver. Both of the internal oscillators' frequencies can be individually programmed through the external resistors to maximize the efficiency and the brightness of the EL lamp.

Regulation

Referring to Figure 1, initially power is applied to V_{DD}. The internal feedback voltage is less than the reference voltage causing the internal comparator to go high which enables the switching MOSFET's oscillator. When the switching MOSFET turns on, current flows through the inductor and flows into the switch. The switching MOSFET will typically turn on for 90% of the switching period. During the on-time, energy is stored in the inductor. When the switching MOSFET turns off, current flowing into the inductor forces the voltage across the inductor to reverse polarity. The voltage across the inductor rises until the external diode conducts and clamps the voltage at V_{OUT} + V_{D1}. The energy in the inductor is then discharged into the C_{OUT} capacitor. The internal comparator continues to turn the switching MOSFET on and off until the internal feedback voltage is above the reference voltage. Once the internal feedback voltage is above the reference voltage, the internal comparator turns off the switching MOSFET's oscillator.

When the EL oscillator is enabled, V_A and V_B switch in opposite states to achieve a 220V peak-to-peak AC output signal. The external resistor that connects to the REL pin determines the EL frequency.

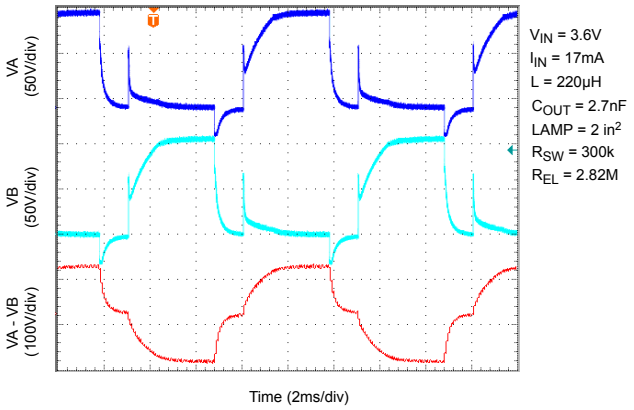

Figure 2. 100Hz Output Waveform

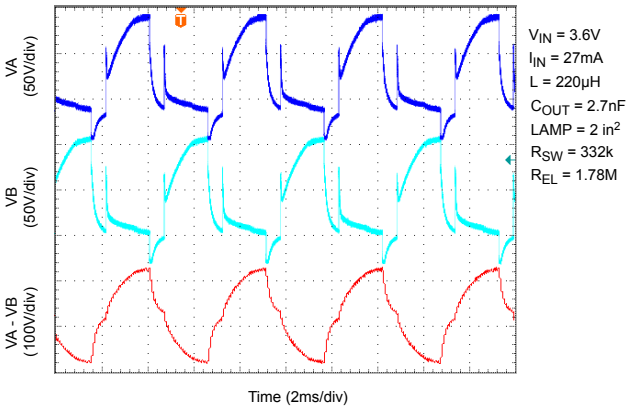

Figure 3. 200Hz Output Waveform

Switching Frequency

The switching frequency of the converter is controlled via an external resistor between R_{SW} pin and V_{DD} pin of the device. The switching frequency increases as the resistor value decreases. For resistor value selections, see the "Typical Characteristics: Switching Frequency vs. SW Resistor" or use the equation below. The switching frequency range is 65kHz to 250kHz, with an accuracy of ±20%. In general, the lower the switching frequency, the greater the input current is drawn to deliver more power to the output. However, the switching frequency should not be so low as to allow the voltage at the switch node or the CS pin to go beyond the absolute maximum voltage of those pins.

$$f_{SW}(\text{kHz}) = \frac{36}{R_{SW}(\text{M}\Omega)}$$

EL Frequency

The EL lamp frequency is controlled via an external resistor connected between R_{EL} pin and V_{DD} pin of the device. The lamp frequency increases as the resistor value decreases. For resistor value selections, see the "Typical Characteristics: EL Frequency vs. EL Resistor" graph on page 4 or use the equation below. The EL lamp frequency range is 60Hz to 1000Hz, with an accuracy of ±20%.

$$f_{EL}(\text{Hz}) = \frac{360}{R_{EL}(\text{M}\Omega)}$$

In general, as the EL lamp frequency increases, the amount of current drawn from the battery will increase. The color of the EL lamp and the intensity are dependent upon its frequency.

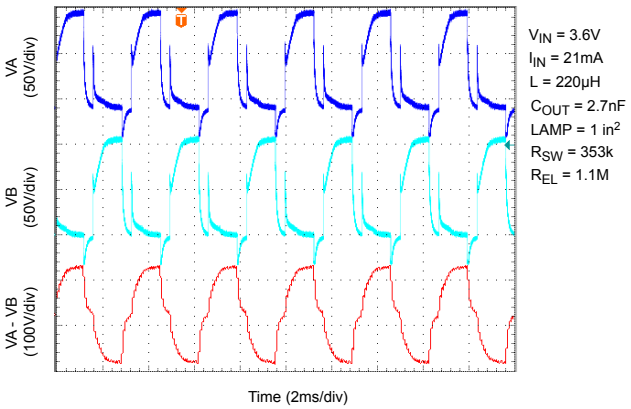

Figure 4. 300Hz Output Waveform

Enable Function

The MIC4832 is disabled by connecting the external resistor (Rsw) to GND. This turns off the switch oscillator of the boost converter. Connecting the external resistor (Rsw) to V_{DD} enables the oscillator and turns on the device. The enable voltage should rise or fall monotonically without interruption.

Application Information

Inductor

A 220µH Murata (LQH4C221K04) inductor is recommended for most applications. Generally, inductors with smaller values can handle more current. Lowering the inductance allows the boost regulator to draw more input current to deliver more energy every cycle. As a result, a lower value inductor may be used to drive larger panels or make the current panel brighter. However, caution is required as using a low value inductor with a low switching frequency may result in voltages exceeding the absolute maximum rating of the switch node and/or the CS pin. If the application uses a low input voltage (1.8 to 3V), a lower value inductor, such as 100µH, may be used in order to drive the EL lamp at max brightness without issue.

Diode

The diode must have a high reverse voltage (150V), since the output voltage at the CS pin can reach up to 130V. A fast switching diode with lower forward voltage and higher reverse voltage (150V), such as BAV20WS/BAS20W, can be used to enhance efficiency.

Output Capacitor

Low ESR capacitors should be used at the regulated boost output (CS pin) of the MIC4832 to minimize the switching output ripple voltage. The larger the output capacitance, the lower the output ripple at the CS pin. The reduced output ripple at the CS pin along with a low ESR capacitor improves the efficiency of the MIC4832 circuit. Selection of the capacitor value will depend upon the peak inductor current, inductor size, and the load. The MIC4832 is designed for use with an output capacitance as low as 2.2nF. For minimum audible noise, the use of a C0G/NPO dielectric output capacitor is recommended. TDK and AVX offer C0G/NPO dielectric capacitors in capacitances up to 2.7nF at 200V to 250V rating in 0805 size. If output ripple is a concern a 0.01µF/200V X7R output capacitor is recommended.

EL Lamp Terminals (VA, VB)

An EL lamp is connected from VA to VB as the load. The high voltage alternated across VA and VB by the H-Bridge cycles generate luminance. The voltage at VA and VB should not exceed the voltage at V_{CS} by more than 3V. This situation may become present when noisy enable signals such as those often generated by mechanical switches are applied to the driver's inputs. To prevent over voltage at VA and VB, 10kΩ resistors may be placed in series from VA to the EL panel and from VB to the EL panel. An alternative to the use of 10kΩ resistors is to apply a diode from the CS pin to VA and VB, where the cathode of the diode is on the CS side and the anode is on the VA and VB side, respectively.

Application Circuit

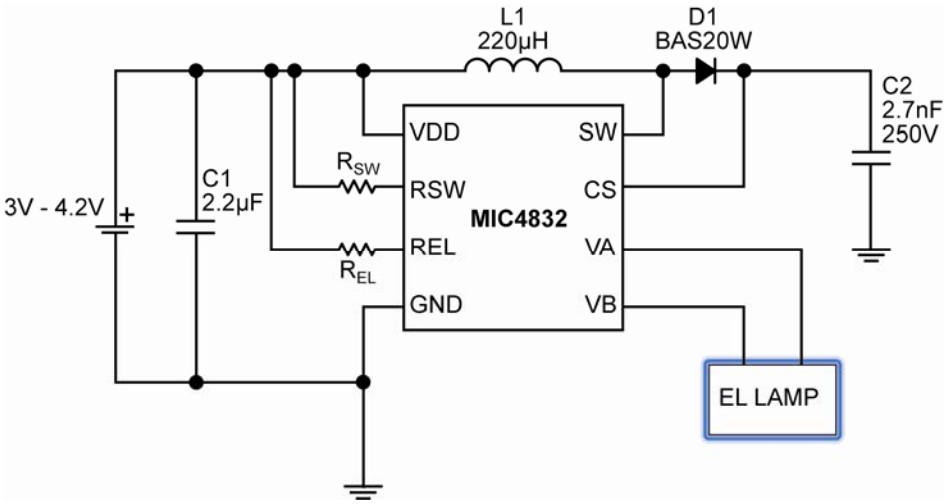

Figure 5: Typical Li-Ion Powered MIC4832 Circuit

Size (inch^2)	Capacitance (nF)	Lamp Frequency (Hz)	100	200	300	400	500	600	700	800	900
		REL (MΩ)	2.82	1.69	1.1	0.837	0.665	0.562	0.471	0.409	0.369
0.4	**2**	**RSW (kΩ)**	240	252	273	281	257	269	281		
		fSW (kHz)	150	143	132	128	116	105	98		
1	**5**	**RSW (kΩ)**	257	295	353						
		fSW (kHz)	140	122	102						
2	**10**	**RSW (kΩ)**	300	333							
		fSW (kHz)	120	108							
3	**15**	**RSW (kΩ)**	313								
		fSW (kHz)	115								

Note: Table 1 applies to circuit shown in Figure 5.

Table 1: Recommended R_{SW} & R_{EL} values for various panel sizes

Layout Recommendation

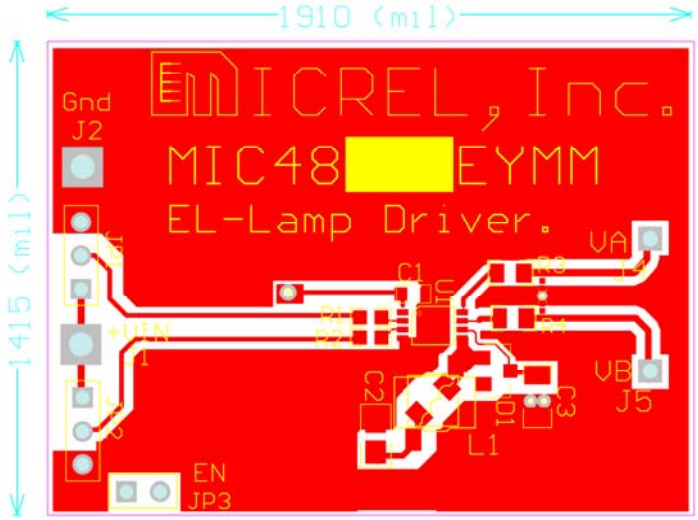

Top

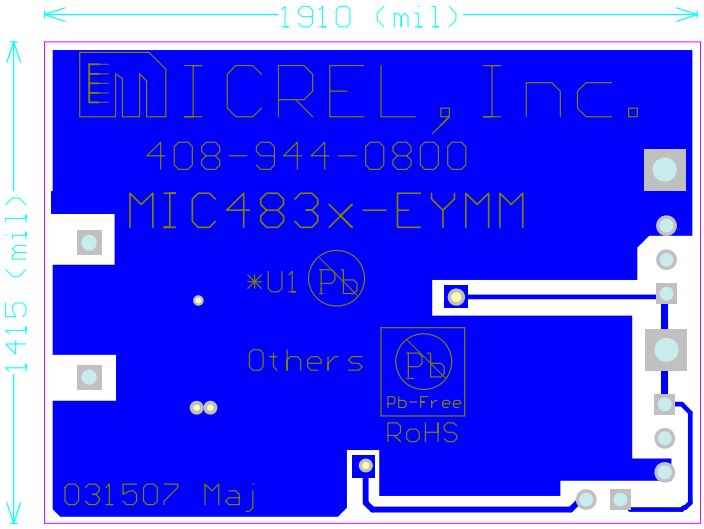

Bottom

Package Information

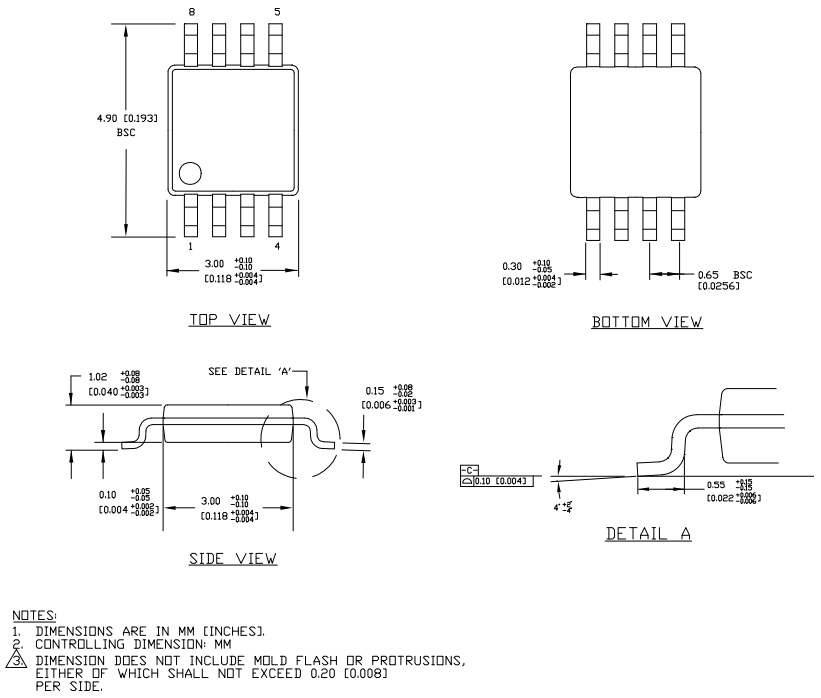

8-Pin MSOP (MM)

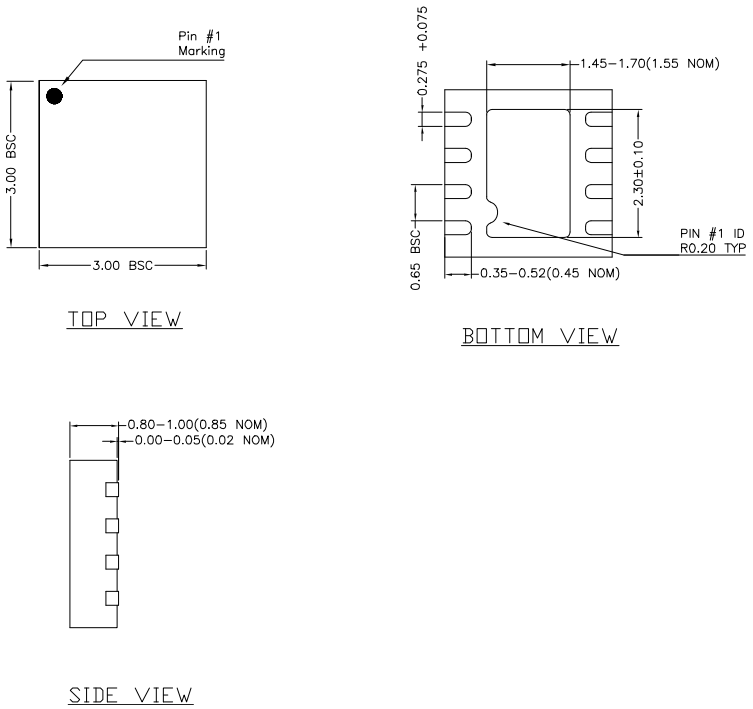

8-Pin 3mm x 3mm MLF® (ML)

MICREL, INC. 2180 FORTUNE DRIVE SAN JOSE, CA 95131 USA
TEL +1 (408) 944-0800 FAX +1 (408) 474-1000 WEB http:/www.micrel.com

The information furnished by Micrel in this data sheet is believed to be accurate and reliable. However, no responsibility is assumed by Micrel for its use. Micrel reserves the right to change circuitry and specifications at any time without notification to the customer.

Micrel Products are not designed or authorized for use as components in life support appliances, devices or systems where malfunction of a product can reasonably be expected to result in personal injury. Life support devices or systems are devices or systems that (a) are intended for surgical implant into the body or (b) support or sustain life, and whose failure to perform can be reasonably expected to result in a significant injury to the user. A Purchaser's use or sale of Micrel Products for use in life support appliances, devices or systems is a Purchaser's own risk and Purchaser agrees to fully indemnify Micrel for any damages resulting from such use or sale.

© 2007 Micrel, Incorporated.

Мы молодая и активно развивающаяся компания в области поставок электронных компонентов. Мы поставляем электронные компоненты отечественного и импортного производства напрямую от производителей и с крупнейших складов мира.

Благодаря сотрудничеству с мировыми поставщиками мы осуществляем комплексные и плановые поставки широчайшего спектра электронных компонентов.

Собственная эффективная логистика и склад в обеспечивает надежную поставку продукции в точно указанные сроки по всей России.

Мы осуществляем техническую поддержку нашим клиентам и предпродажную проверку качества продукции. На все поставляемые продукты мы предоставляем гарантию .

Осуществляем поставки продукции под контролем ВП МО РФ на предприятия военно-промышленного комплекса России , а также работаем в рамках 275 ФЗ с открытием отдельных счетов в уполномоченном банке. Система менеджмента качества компании соответствует требованиям ГОСТ ISO 9001.

Минимальные сроки поставки, гибкие цены, неограниченный ассортимент и индивидуальный подход к клиентам являются основой для выстраивания долгосрочного и эффективного сотрудничества с предприятиями радиоэлектронной промышленности, предприятиями ВПК и научно-исследовательскими институтами России.

С нами вы становитесь еще успешнее!

Наши контакты:

Телефон: +7 812 627 14 35

Электронная почта: sales@st-electron.ru

Адрес: 198099, Санкт-Петербург, Промышленная ул, дом № 19, литера Н, помещение 100-Н Офис 331