19-0309; Rev 3; 11/07

TTL Compatible CMOS Analog Switches

General Description

Maxim's DG300–DG303 and DG300A–DG303A CMOS dual and quad analog switches combine low power operation with fast switching times and superior DC and AC switch characteristics. On-resistance is less than 50Ω and is essentially constant over the analog signal range. Device specifications are ideal for battery-powered circuitry.

These switches are available in a variety of formats as outlined in the *Pin Configurations* section. The switch control logic inputs are fully TTL and CMOS compatible. Also featured are "break-before-make" switching and low charge injection.

Maxim's DG300-DG303 and DG300A-DG303A families are electrically compatible and pin compatible with the original manufacturer's devices. All devices operate with power supplies ranging from ±5V to ±18V. Single-supply operation is implemented by connecting V- to GND.

Applications

Portable Instruments

Low-Power Sample/Holds

Power-Supply Switching

Programmable Gain Amplifiers

SPDT and DPDT Functions

Process Control and Telemetry

Features

- ♦ **Monolithic Low-Power CMOS**
- ♦ **Latchup Proof Construction**
- ♦ **Fully Compatible 2nd Source**
- ♦ **Low On-Resistance, <50Ω**
- ♦ **Fast Switching Time**
- ♦ **V+ to V- Analog Signal Range**
- ♦ **Single-Supply Capability**

Ordering Information

PART	TEMP RANGE	PIN-PACKAGE
DG300C/D	0°C to +70°C	Dice
DG300CJ	0°C to +70°C	14 Lead Plastic DIP
DG300CWE	0°C to +70°C	16 Lead Wide SO
DG300CK	0°C to +70°C	14 Lead CERDIP
DG300BWE	-25°C to +85°C	16 Lead Wide SO
DG300BK	-25°C to +85°C	14 Lead CERDIP
DG300BA	-25°C to +85°C	10 Lead Metal Can
DG300AK	-55°C to +125°C	14 Lead CERDIP
DG300AA	-55°C to +125°C	10 Lead Metal Can

Ordering Information continued at end of data sheet.

Pin Configurations

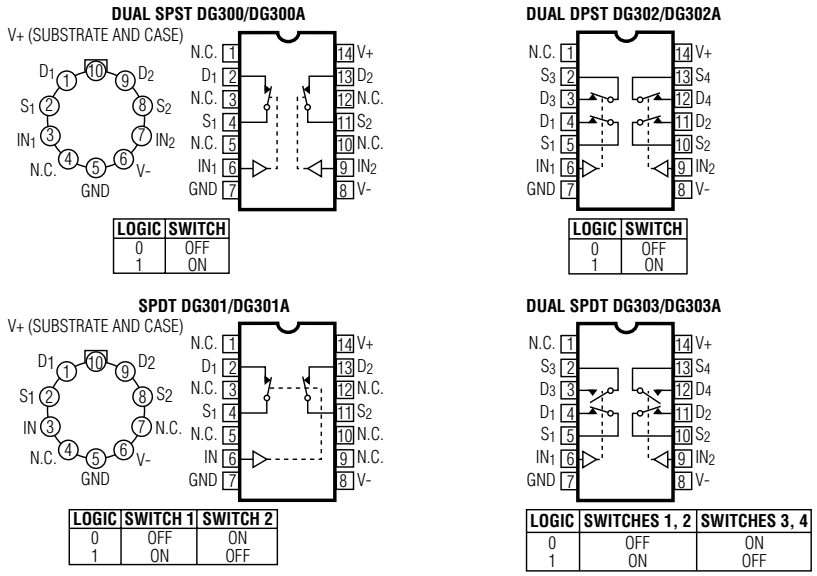

For pricing, delivery, and ordering information, please contact Maxim Direct at 1-888-629-4642, or visit Maxim's website at www.maxim-ic.com.

TTL Compatible CMOS Analog Switches

ABSOLUTE MAXIMUM RATINGS

Voltages Referenced to V-
V+ (DG300–DG303).....36V
V+ (DG300A–DG303A).....44V
GND 25V
Digital Inputs, V_S, V_D, (Note 1).....-4V to (V+ + 4V) or 30mA, whichever occurs first
Current, Any Terminal Except S or D.....30mA
Continuous Current, S or D.....30mA
(pulsed at 1ms, 10% duty cycle max) 100mA
Storage Temperature (A & B suffix).....-65°C to +150°C
(C suffix).....-65°C to +125°C

Operating Temperature (A suffix).....-55°C to +125°C
(B suffix).....-25°C to +85°C
(C suffix).....0°C to +70°C
Lead Temperature (soldering 10s) .....+300°C
Power Dissipation*
Cerdip (K) (derate 11mW/°C above +75°C).....825mW
Plastic DIP (J) (derate 6.5mW/°C above +25°C) 470mW
Metal Can (A) (derate 6mW/°C above +75°C).....450mW

Device mounted with all leads soldered or welded to PC board.

Stresses beyond those listed under "Absolute Maximum Ratings" may cause permanent damage to the device. These are stress ratings only, and functional operation of the device at these or any other conditions beyond those indicated in the operational sections of the specifications is not implied. Exposure to absolute maximum rating conditions for extended periods may affect device reliability.

ELECTRICAL CHARACTERISTICS

(V+ = +15V, V- = -15V, GND = 0V, T_A = +25°C, unless otherwise noted.)

	PARAMETER	SYMBOL	TEST CONDITIONS		DG300–DG303A DG300A–DG303AA MIN (Note 2)	TYP (Note 3)	MAX	DG300–DG303B/C DG300A–DG303AB/C MIN (Note 2)	TYP (Note 3)	MAX	UNITS
SWITCH	Analog Signal Range	V_{ANALOG}	I_S = 10mA, V_{IN} = 0.8V or 4.0V		-15		+15	-15		+15	V
	Drain-Source ON-Resistance	$R_{DS(ON)}$	V_{IN} = 0.8V or V_{IN} = 0.8V	I_S = -10mA, V_D = 10V		30	50		30	50	Ω
				I_S = -10mA, V_D = -10V		30	50		30	50	
	Source OFF-Leakage Current	$I_{S(OFF)}$		V_S = 14V, V_D = -14V		0.1	1		0.1	5	nA
				V_S = -14V, V_D = 14V	-1	-0.1		-5	-0.1		
	Drain OFF-Leakage Current	$I_{D(OFF)}$		V_S = -14V, V_D = 14V		0.1	1		0.1	5	nA
				V_S = 14V, V_D = -14V	-1	-0.1		-5	-0.1		
	Drain ON-Leakage Current	$I_{D(ON)}$		V_D = V_S = 14V		0.1	2		0.1	5	nA
				V_D = V_S = -14V	-2	-0.1		-5	-0.1		
INPUT	Input Current/ Voltage High	I_{INH}	V_{IN} = 5.0V		-1	-0.001		-1	-0.001		µA
			V_{IN} = 15V			0.001	1		0.001	1	
	Input Current/ Voltage Low	I_{INL}	V_{IN} = 0V		-1	-0.001		-1	-0.001		µA
DYNAMIC	Turn-ON Time	t_{ON}	See Switching Time Test Circuit			150	300		150	300	ns
	Turn-OFF Time	t_{OFF}				130	250		130	250	ns
	Break-Before-Make Interval	t_{ON} - t_{OFF}	See Break-Before-Make Time Test Circuit, DG301(A)/DG303(A) only			50			50		ns
	Charge Injection	Q	C_L = 10nF, R_{GEN} = 0Ω, V_{GEN} = 0V			12			12		pC
	Source OFF-Capacitance	$C_{S(OFF)}$	f = 1MHz, V_{IN} = 0.8V or V_{IN} = 4.0V	V_S = 0V		14			14		pF
	Drain OFF-Capacitance	$C_{D(OFF)}$		V_D = 0V		14			14		pF
	Channel ON-Capacitance	$C_{D(ON)}$ + $C_{S(ON)}$		V_S = VD = 0V		40			40		pF
	Input Capacitance	C_{IN}	f = 1MHz	V_{IN} = 0V		6			6		pF
				V_{IN} = 15V		7			7		
	Off-Isolation (Note 4)		V_{IN} = 0V, R_L = 1kΩ V_S = 1V_{RMS}, f = 500kHz			62			62		dB
	Crosstalk (Channel-to-Channel)					74			74		dB

ELECTRICAL CHARACTERISTICS (continued)

(V+ = +15V, V- = -15V, GND = 0V, T_A = +25°C, unless otherwise noted.)

	PARAMETER	SYMBOL	TEST CONDITIONS	DG300–DG303A DG300A–DG303AA MIN (Note 2)	TYP (Note 3)	MAX	DG300–DG303B/C DG300A–DG303AB/C MIN (Note 2)	TYP (Note 3)	MAX	UNITS
SUPPLY	Positive Supply Current	I+	V_{IN} = 4V (one input) (all others = 0)		0.23	0.5		0.23	0.5	mA
	Negative Supply Current	I-		-10	-0.001		-10	-0.001		µA
	Positive Supply Current	I+	V_{IN} = 0.8V (all inputs)		0.001	10		0.001	10	µA
	Negative Supply Current	I-		-10	-0.001		-10	-0.001		µA

ELECTRICAL CHARACTERISTICS (Over Temperature)

(V+ = +15V, V- = -15V, GND = 0V, T_A = Over Temperature Range, unless otherwise noted.)

	PARAMETER	SYMBOL	TEST CONDITIONS		DG300–DG303A DG300A–DG303AA MIN (Note 2)	TYP (Note 3)	MAX	DG300–DG303B/C DG300A–DG303AB/C MIN (Note 2)	TYP (Note 3)	MAX	UNITS
SWITCH	Analog Signal Range	V_{ANALOG}	I_S = -10mA, V_{IN} = 0.8V or 4.0V		-15		+15	-15		+15	V
	Drain-Source ON-Resistance	$R_{DS(ON)}$	V_{IN} = 0.8V or V_{IN} = 0.8V	I_S = -10mA, V_D = 10V			75			75	Ω
				I_S = -10mA, V_D = -10V			75			75	
	Source OFF-Leakage Current	$I_{S(OFF)}$		V_S = 14V, V_D = -14V			100			100	nA
				V_S = -14V, V_D = 14V	-100			-100			
	Drain OFF-Leakage Current	$I_{D(OFF)}$		V_S = -14V, V_D = 14V			100			100	nA
				V_S = 14V, V_D = -14V	-100			-100			
	Drain ON-Leakage Current	$I_{D(ON)}$		V_D = V_S = 14V			200			200	nA
				V_D = V_S = -14V	-200			-200			
INPUT	Input Current/ Voltage High	I_{INH}	V_{IN} = 5.0V		-1			-10			µA
			V_{IN} = 15V				1			10	
	Input Current/ Voltage Low	I_{INL}	V_{IN} = 0V		-1			-10			µA
SUPPLY	Positive Supply Current	I+	V_{IN} = 4V (one input) (all others = 0)				1			1	mA
	Negative Supply Current	I-			-100			-200			mA
	Positive Supply Current	I+	V_{IN} = 0.8V (all inputs)				100			200	µA
	Negative Supply Current	I-			-100			-200			µA
DYNAMIC	Turn-ON Time	t_{ON}	See Switching Time Test Circuit				500				ns
	Turn-OFF Time	t_{OFF}					450				ns

ELECTRICAL CHARACTERISTICS (Over Temperature) (continued)

(V+ = +15V, V- = -15V, GND = 0V, T_A = Over Temperature Range, unless otherwise noted.)

Note 1: Signals on S_X, D_X, or IN_X exceeding V+ or V- are clamped by internal diodes. Limit diode forward current to maximum current ratings.

Note 2: The algebraic convention whereby the most negative value is a minimum, and the most positive value is a maximum is used in this data sheet.

Note 3: Typical values are for DESIGN AID ONLY, not guaranteed nor subject to production testing.

Note 4: OFF-isolation = 20 log $\frac{V_S}{V_D}$, V_S = input to OFF switch, V_D = output.

Typical Operating Characteristics

(T_A = +25°C, unless otherwise noted.)

$R_{DS(ON)}$ vs. V_D AND TEMPERATURE

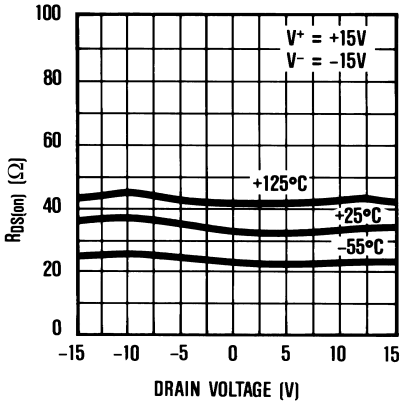

$R_{DS(ON)}$ vs. V_D AND POWER SUPPLY VOLTAGE

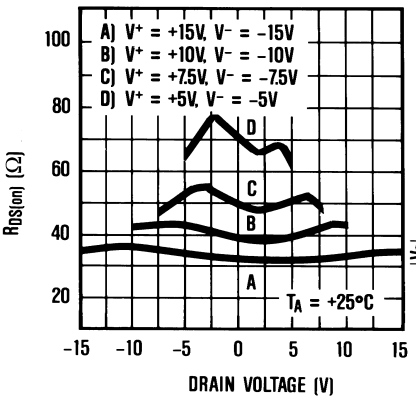

OFF-ISOLATION AND INSERTION LOSS vs. FREQUENCY

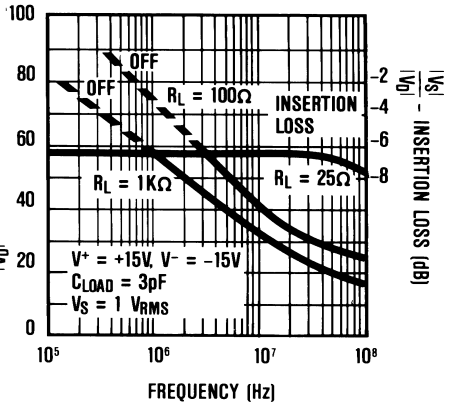

SWITCHING TIME vs. TEMPERATURE

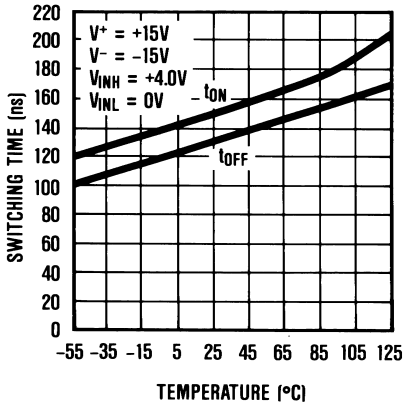

SWITCHING TIME AND BREAK-BEFORE-MAKE TIME vs. POSITIVE SUPPLY VOLTAGE

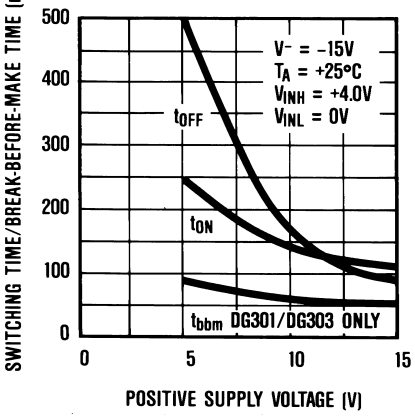

SWITCHING TIME vs. NEGATIVE SUPPLY VOLTAGE

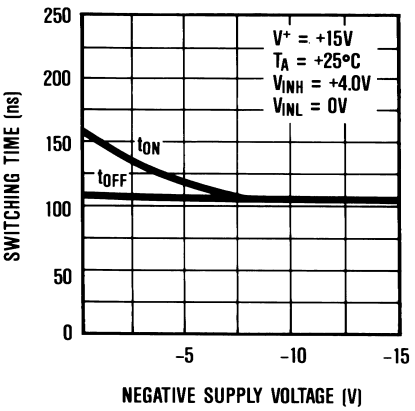

Test Circuits

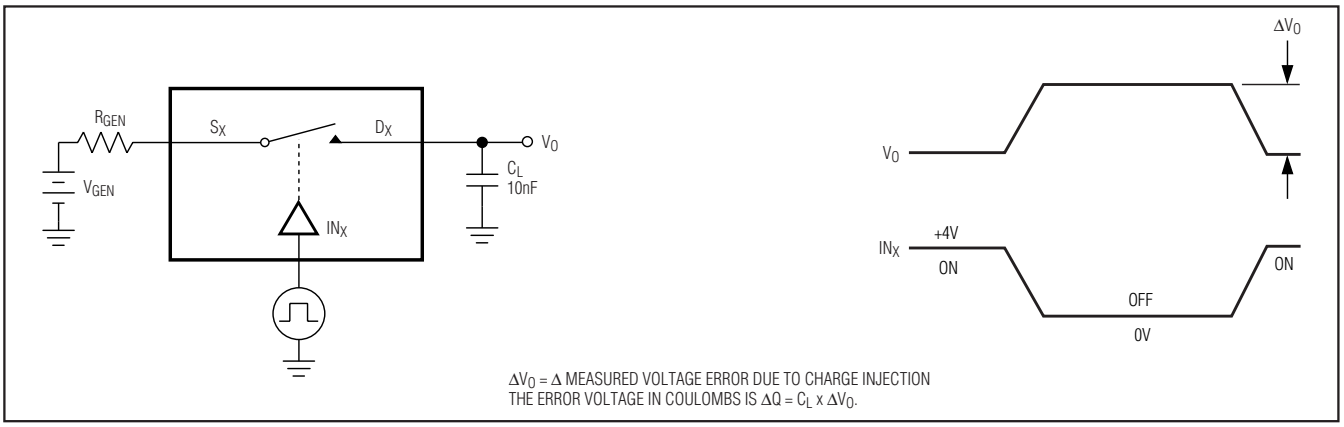

Figure 1. Charge Injection Test Circuit

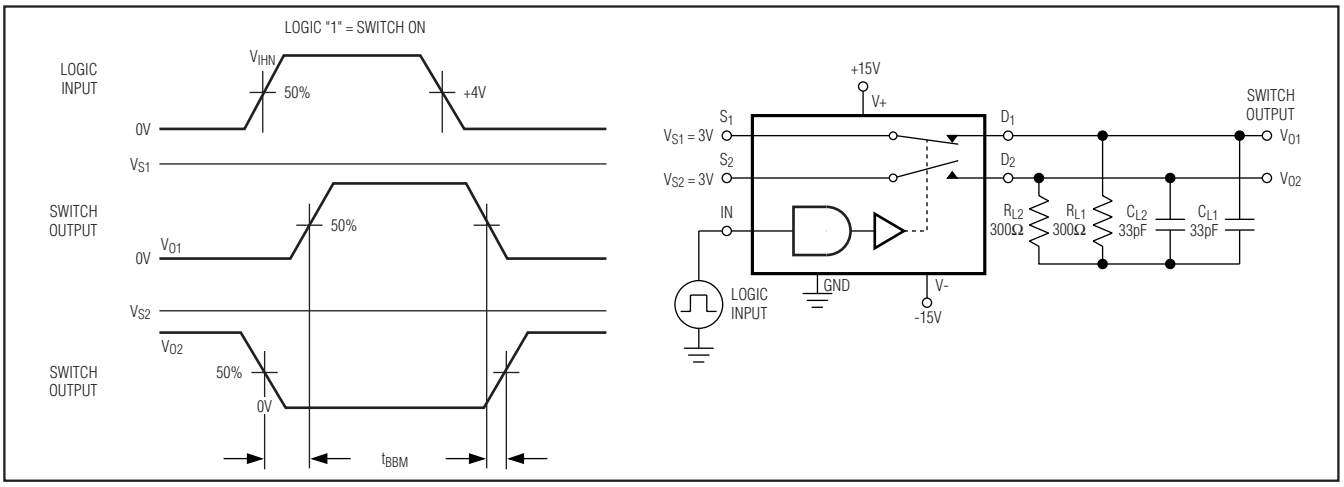

Figure 2. Break-Before-Make Time Test Circuit SPDT (DG301(A), DG303(A)

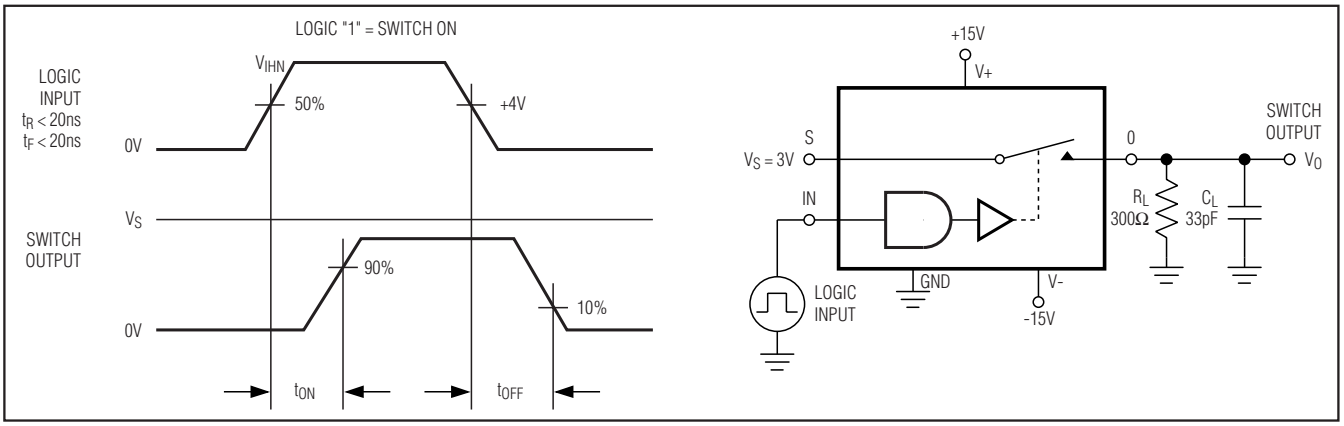

Figure 3. Switching Time Test Circuit

Table 1. Typical Single Supply Parameters

PARAMETER		V+ SUPPLY VOLTAGE (V- = 0V)			
		+10V	+15V	+20V	+30V
Switching Time (R_L = 1kΩ)	t_{ON}	190ns	150ns	110ns	70ns
	t_{OFF}	40ns	40ns	40ns	40ns
On-Resistance	V_{SIGNAL} = +1V	71Ω	51Ω	42Ω	31Ω
	V_{SIGNAL} = V+ / 2	77Ω	54Ω	43Ω	30Ω
	V_{SIGNAL} = V+	84Ω	63Ω	54Ω	43Ω
Input Logic Levels		0.8V, 4.0V	0.8V, 4.0V	0.8V, 4.0V	0.8V, 4.5V

Applications Information

All DG300 family switches will operate with ±5V to ±15V power supplies. They can also be used with single-ended power supplies ranging from +10V to +30V where the V- terminal is connected to ground. In either case, analog signals ranging from V+ to V- can be switched.

The on-resistance variation with analog signal and supply voltage is shown in the *Typical Operating Characteristics*. The temperature coefficient of R_{ON} is typically 0.5%/°C. Typical on-resistance matching from channel to channel is 10%. In addition, Table 1 outlines some typical parameters for single-supply operation.

Table 2. Charge Injection (±15V Supplies)

ANALOG INPUT (V)	INJECTED Q (pC)
+10	4
+5	8
0	12
-5	8
-10	5

The charge injection test circuit is shown in Figure 1. Table 2 lists the typical injected charge for DG300 series switches with various input voltages.

Chip Topography

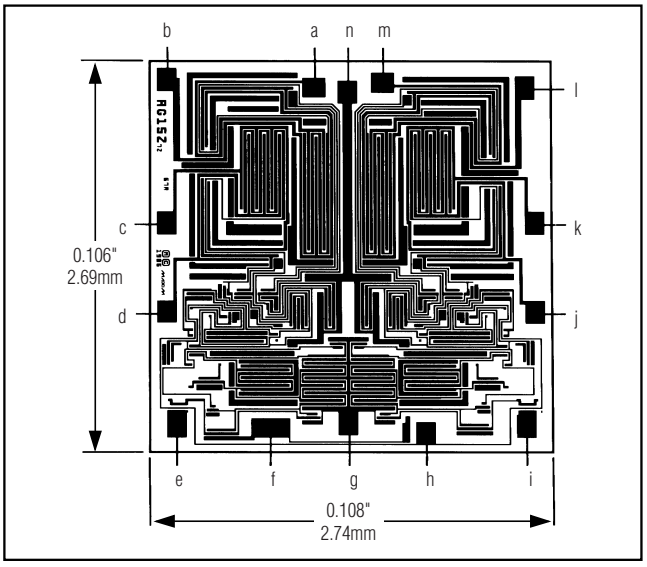

DIE PAD	DG300 DG300A	DG301 DG301A	DG302/DG303 DG302A/DG303A
a	N.C.	N.C.	S3
b	D1	D1	D3
c	N.C.	S1	D1
d	S1	N.C.	S1
e	IN1	IN1	IN1
f	N.C.	N.C.	N.C.
g	GND	GND	GND
h	V-	V-	V-
i	IN2	N.C.	IN2
j	S2	N.C.	S2
k	N.C.	N.C.	D2
l	D2	S2	D4
m	N.C.	D2	S4
n	V+	V+	V+

Ordering Information (continued)

PART	TEMP RANGE	PIN-PACKAGE
DG300AC/D	0°C to +70°C	Dice
DG300ACJ	0°C to +70°C	14 Lead Plastic DIP
DG300ACWE	0°C to +70°C	16 Lead Wide SO
DG300ACK	0°C to +70°C	14 Lead CERDIP
DG300ABWE	-25°C to +85°C	16 Lead Wide SO
DG300ABK	-25°C to +85°C	14 Lead CERDIP
DG300ABA	-25°C to +85°C	10 Lead Metal Can
DG301C/D	0°C to +70°C	Dice
DG301CJ	0°C to +70°C	14 Lead Plastic DIP
DG301CWE	0°C to +70°C	16 Lead Wide SO
DG301CK	0°C to +70°C	14 Lead CERDIP
DG301BWE	-25°C to +85°C	16 Lead Wide SO
DG301BK	-25°C to +85°C	14 Lead CERDIP
DG301BA	-25°C to +85°C	10 Lead Metal Can
DG301AK	-55°C to +125°C	14 Lead CERDIP
DG301AA	-55°C to +125°C	10 Lead Metal Can
DG301AC/D	0°C to +70°C	Dice
DG301ACJ	0°C to +70°C	14 Lead Plastic DIP
DG301ACWE	0°C to +70°C	16 Lead Wide SO
DG301ACK	0°C to +70°C	14 Lead CERDIP
DG301ABWE	-25°C to +85°C	16 Lead Wide SO
DG301ABK	-25°C to +85°C	14 Lead CERDIP
DG301ABA	-25°C to +85°C	10 Lead Metal Can
DG302C/D	0°C to +70°C	Dice
DG302CJ	0°C to +70°C	14 Lead Plastic DIP

PART	TEMP RANGE	PIN-PACKAGE
DG302CWE	0°C to +70°C	16 Lead Wide SO
DG302CK	0°C to +70°C	14 Lead CERDIP
DG302BWE	-25°C to +85°C	16 Lead Wide SO
DG302BK	-25°C to +85°C	14 Lead CERDIP
DG302AK	-55°C to +125°C	14 Lead CERDIP
DG302AC/D	0°C to +70°C	Dice
DG302ACJ	0°C to +70°C	14 Lead Plastic DIP
DG302ACWE	0°C to +70°C	16 Lead Wide SO
DG302ACK	0°C to +70°C	14 Lead CERDIP
DG302ABWE	-25°C to +85°C	16 Lead Wide SO
DG302ABK	-25°C to +85°C	14 Lead CERDIP
DG303C/D	0°C to +70°C	Dice
DG303CJ	0°C to +70°C	14 Lead Plastic DIP
DG303CWE	0°C to +70°C	16 Lead Wide SO
DG303CK	0°C to +70°C	14 Lead CERDIP
DG303BWE	-25°C to +85°C	16 Lead Wide SO
DG303BK	-25°C to +85°C	14 Lead CERDIP
DG303AK	-55°C to +125°C	14 Lead CERDIP
DG303AC/D	0°C to +70°C	Dice
DG303ACJ	0°C to +70°C	14 Lead Plastic DIP
DG303ACWE	0°C to +70°C	16 Lead Wide SO
DG303ACK	0°C to +70°C	14 Lead CERDIP
DG303ABWE	-25°C to +85°C	16 Lead Wide SO
DG303ABK	-25°C to +85°C	14 Lead CERDIP

Package Information

(The package drawing(s) in this data sheet may not reflect the most current specifications. For the latest package outline information, go to **www.maxim-ic.com/packages**.)

PDIPN.EPS

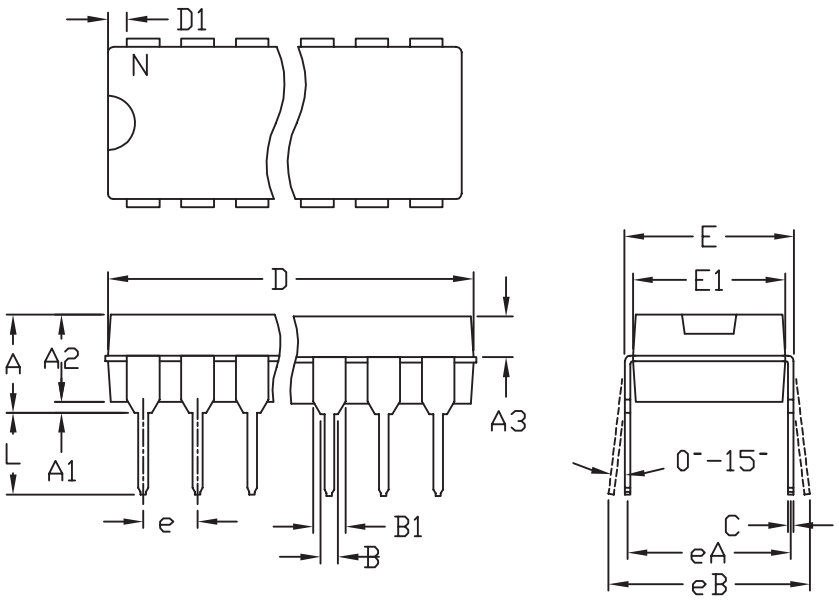

	INCHES		MILLIMETERS	
	MIN	MAX	MIN	MAX
A	---	0.180	---	4.572
A1	0.015	---	0.38	---
A2	0.125	0.175	3.18	4.45
A3	0.055	0.080	1.40	2.03
B	0.015	0.022	0.381	0.56
B1	0.045	0.065	1.14	1.65
C	0.008	0.014	0.2	0.355
D1	0.005	0.080	0.13	2.03
E	0.300	0.325	7.62	8.26
E1	0.240	0.310	6.10	7.87
e	0.100 BSC.		2.54 BSC.	
eA	0.300 BSC.		7.62 BSC.	
eB	0.400 BSC.		10.16 BSC.	
L	0.115	0.150	2.921	3.81

	INCHES		MILLIMETERS			
	MIN	MAX	MIN	MAX	N	MS001
D	0.348	0.390	8.84	9.91	8	AB
D	0.735	0.765	18.67	19.43	14	AC
D	0.745	0.765	18.92	19.43	16	AA
D	0.885	0.915	22.48	23.24	18	AD
D	1.015	1.045	25.78	26.54	20	AE
D	1.14	1.265	28.96	32.13	24	AF
D	1.360	1.380	34.54	35.05	28	*5

NOTES:
1. D&E DO NOT INCLUDE MOLD FLASH
2. MOLD FLASH OR PROTRUSIONS NOT TO EXCEED .15mm (.006")
3. CONTROLLING DIMENSION: MILLIMETER
4. MEETS JEDEC MS001-XX AS SHOWN IN ABOVE TABLE
5. SIMILIAR TO JEDEC MO-058AB
6. N = NUMBER OF PINS

MAXIM 120 SAN GABRIEL DR SUNNYVALE CA 94086 FAX (408) 737 7194 PROPRIETARY INFORMATION

TITLE: PACKAGE FAMILY OUTLINE: PDIP .300"

1/1

DOCUMENT CONTROL NUMBER: 21-0043 REV: D

Package Information (continued)

(The package drawing(s) in this data sheet may not reflect the most current specifications. For the latest package outline information, go to **www.maxim-ic.com/packages**.)

SOICW.EPS

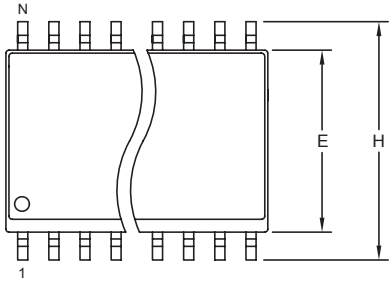

TOP VIEW

	INCHES		MILLIMETERS	
DIM	MIN	MAX	MIN	MAX
A	0.093	0.104	2.35	2.65
A1	0.004	0.012	0.10	0.30
B	0.014	0.019	0.35	0.49
C	0.009	0.013	0.23	0.32
e	0.050		1.27	
E	0.291	0.299	7.40	7.60
H	0.394	0.419	10.00	10.65
L	0.016	0.050	0.40	1.27

VARIATIONS:

	INCHES		MILLIMETERS			
DIM	MIN	MAX	MIN	MAX	N	MS013
D	0.398	0.413	10.10	10.50	16	AA
D	0.447	0.463	11.35	11.75	18	AB
D	0.496	0.512	12.60	13.00	20	AC
D	0.598	0.614	15.20	15.60	24	AD
D	0.697	0.713	17.70	18.10	28	AE

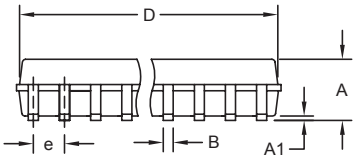

FRONT VIEW

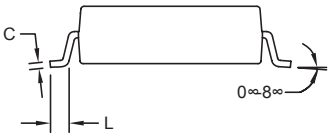

SIDE VIEW

NOTES:
1. D&E DO NOT INCLUDE MOLD FLASH.
2. MOLD FLASH OR PROTRUSIONS NOT TO EXCEED 0.15mm (.006").
3. LEADS TO BE COPLANAR WITHIN 0.10mm (.004").
4. CONTROLLING DIMENSION: MILLIMETERS.
5. MEETS JEDEC MS013.
6. N = NUMBER OF PINS.

DALLAS SEMICONDUCTOR MAXIM

PROPRIETARY INFORMATION

TITLE: PACKAGE OUTLINE, .300" SOIC

APPROVAL	DOCUMENT CONTROL NO.	REV.	
	21-0042	B	1/1

Package Information (continued)

(The package drawing(s) in this data sheet may not reflect the most current specifications. For the latest package outline information, go to **www.maxim-ic.com/packages**.)

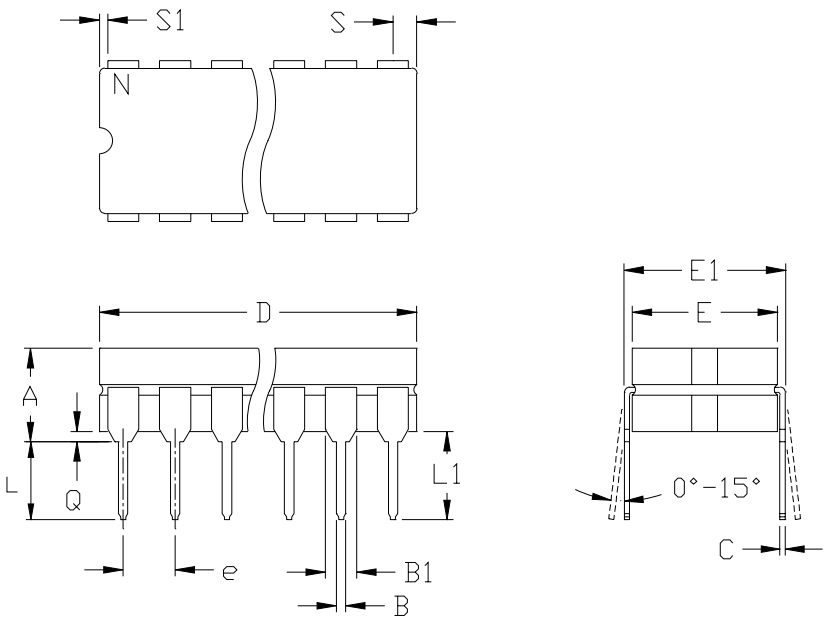

	INCHES		MILLIMETERS	
	MIN	MAX	MIN	MAX
A	---	0.200	---	5.08
B	0.014	0.023	0.36	0.58
B1	0.038	0.065	0.97	1.65
C	0.008	0.015	0.20	0.38
E	0.220	0.310	5.59	7.87
E1	0.290	0.320	7.37	8.13
e	0.100		2.54	
L	0.125	0.200	3.18	5.08
L1	0.150	---	0.00	---
Q	0.015	0.070	0.38	1.78
S	---	0.098	---	2.49
S1	0.005	---	0.13	---

	INCHES		MILLIMETERS			
	MIN	MAX	MIN	MAX	N	CASE
D	---	0.405	---	10.29	8	P:D4
D	---	0.785	---	19.94	14	C:D1
D	---	0.840	---	21.34	16	E:D2
D	---	0.960	---	24.38	18	V:D6
D	---	1.060	---	26.92	20	R:D8
D	---	1.280	---	32.51	24	L:D9

NOTES:
1. CONTROLLING DIMENSION: INCH
2. MEETS 1835 CASE OUTLINE CONFIGURATION #1 AS SHOWN IN ABOVE TABLE
3. N = NUMBER OF PINS

MAXIM 120 SAN GABRIEL DR SUNNYVALE CA 94086 FAX (408) 737 7194 PROPRIETARY INFORMATION | PACKAGE FAMILY OUTLINE: CDIP .300" (TITLE) | 1/1 | 21-0045 A (DOCUMENT CONTROL NUMBER REV)

CDIPSLEPS

Revision History

REVISION NUMBER	REVISION DATE	DESCRIPTION	PAGES CHANGED
0	2/88	Initial release	—
1	6/99	Errors in the test limits and pin configuration	—
2	9/04	Fixed Truth Table	—
3	11/07	Correction to pin configuration	1

Maxim cannot assume responsibility for use of any circuitry other than circuitry entirely embodied in a Maxim product. No circuit patent licenses are implied. Maxim reserves the right to change the circuitry and specifications without notice at any time.

© 2007 Maxim Integrated Products MAXIM is a registered trademark of Maxim Integrated Products, Inc.

Мы молодая и активно развивающаяся компания в области поставок электронных компонентов. Мы поставляем электронные компоненты отечественного и импортного производства напрямую от производителей и с крупнейших складов мира.

Благодаря сотрудничеству с мировыми поставщиками мы осуществляем комплексные и плановые поставки широчайшего спектра электронных компонентов.

Собственная эффективная логистика и склад в обеспечивает надежную поставку продукции в точно указанные сроки по всей России.

Мы осуществляем техническую поддержку нашим клиентам и предпродажную проверку качества продукции. На все поставляемые продукты мы предоставляем гарантию .

Осуществляем поставки продукции под контролем ВП МО РФ на предприятия военно-промышленного комплекса России , а также работаем в рамках 275 ФЗ с открытием отдельных счетов в уполномоченном банке. Система менеджмента качества компании соответствует требованиям ГОСТ ISO 9001.

Минимальные сроки поставки, гибкие цены, неограниченный ассортимент и индивидуальный подход к клиентам являются основой для выстраивания долгосрочного и эффективного сотрудничества с предприятиями радиоэлектронной промышленности, предприятиями ВПК и научно-исследовательскими институтами России.

С нами вы становитесь еще успешнее!

Наши контакты:

Телефон: +7 812 627 14 35

Электронная почта: sales@st-electron.ru

Адрес: 198099, Санкт-Петербург, Промышленная ул, дом № 19, литера Н, помещение 100-Н Офис 331