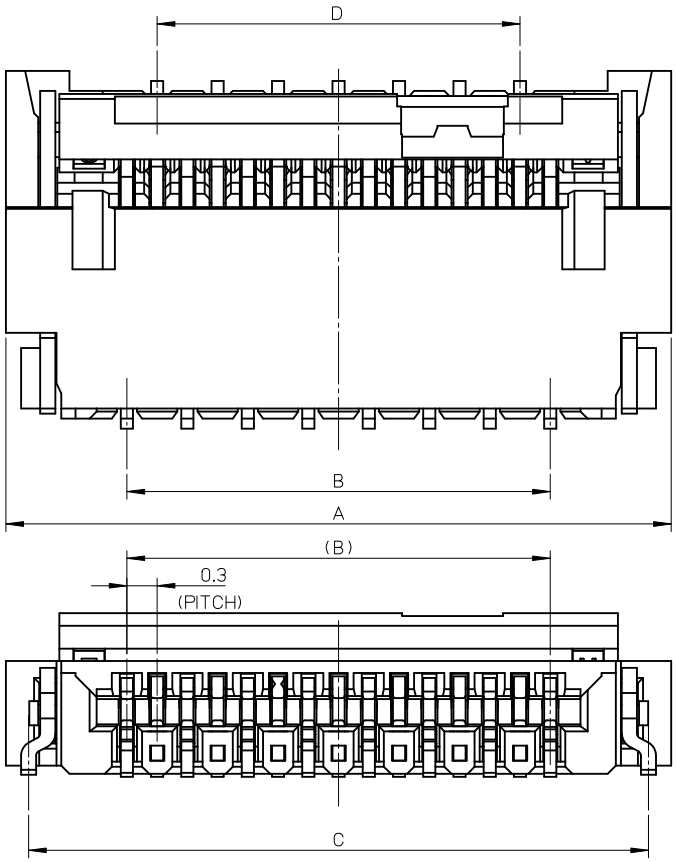

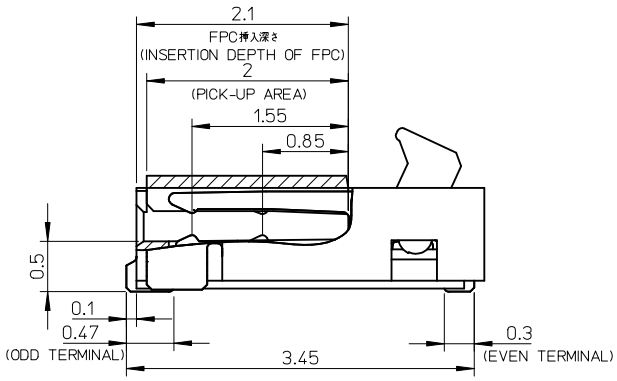

断面図

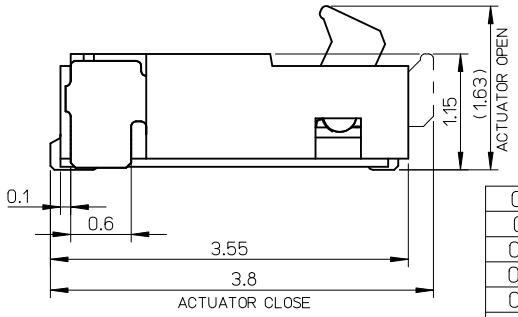

注記 NOTES:

1.材質 MATERIAL
ハウジング：LCP(液晶ポリマー)、白色、ガラス充填、UL94V-0
HOUSING:LIQUID CRYSTAL POLYMER,WHITE(NATURAL)
GLASS FILLED,UL94V-0
アクチュエータ：ポリアミド樹脂
黒色、ガラス充填、UL94V-HB
ACTUATOR: POLYAMIDE
BLACK GLASS FILLED,UL94V-HB
ターミナル：銅合金(t=0.12)
TERMINAL:COPPER ALLOY(t=0.12)
金具：燐青銅(t=0.15)
NAIL:PHOSPHOR BRONZE(t=0.15)

2.めっき仕様 PLATING
ターミナル TERMINAL
接点部：金めっき 0.1μm以上
CONTACT AREA: GOLD 0.1 MICROMETER MINIMUM
半田付け部：金めっき
SOLDER TAIL AREA: GOLD
下地めっき:ニッケル 1.0μm以上
UNDER PLATING:NICKEL 1.0 MICROMETER MINIMUM
金具 NAIL
錫めっき 1.0μm以上
TIN PLATING 1.0 MICROMETER MINIMUM
下地めっき:ニッケル 1.0μm以上
UNDER PLATING:NICKEL 1.0 MICROMETER MINIMUM

3.平坦度は、0.1ミリ以下とする。
TAILS COPLANARITY TO BE 0.1 MAXIMUM.

4.製品の取り扱いについては、コネクタ取り扱い説明書(AS-502598-001)を参照願います。
PLEASE REFER TO INSTRUCTION MANUAL(AS-502598-001) FOR 0.3 FPC CONNECOR BACK FLIP.

5.ELV及びRoHS適合品
ELV AND RoHS COMPLIANT

0.125	14.4	16.95	15	17.4	502598-5191	51
0.112	12.6	15.15	13.2	15.6	502598-4591	45
0.098	10.8	13.35	11.4	13.8	502598-3991	39
0.085	9	11.55	9.6	12	502598-3391	33
0.077	7.8	10.35	8.4	10.8	502598-2991	29
0.072	7.2	9.75	7.8	10.2	502598-2791	27
0.068	6.6	9.15	7.2	9.6	502598-2591	25
0.063	6	8.55	6.6	9	502598-2391	23
重さ (g) WEIGHT(g)	D	C	B	A	EMBOSSED PACKAGE オーダー番号 ORDER NO.	極 数 CIRCUITS

CONNECTOR SERIES NO. 502598-**11

REVISED
EC NO: J2012-0121
DRWN:YUHASEGAWA 2011/07/25
CH'KD:KTAKAHASHI 2011/07/25
APPR:KMORIKAWA 2011/07/28
DESCRIPTION
REV C

GENERAL TOLERANCES (UNLESS SPECIFIED)

10 UNDER	±0.2
10 OVER 30 UNDER	±0.25
30 OVER	±0.3
ANGULAR ±1 °	

DRAFT WHERE APPLICABLE MUST REMAIN WITHIN DIMENSIONS

DIMENSION STYLE: MM ONLY
SCALE: 20:1
DESIGN UNITS: METRIC
THIRD ANGLE PROJECTION

DRAWN BY: HONO DATE: 2009/07/21
CHECKED BY: HSHIMOYAMA DATE: 2009/07/21
APPROVED BY: KMORIKAWA DATE: 2009/07/21

TITLE: 0.3 FPC CONN. BACK FLIP HOUSING ASSY

molex MOLEX INCORPORATED

MATERIAL NO.: SEE TABLE
DOCUMENT NO.: SD-502598-001
SHEET NO.: 1 OF 2
SIZE: A3

THIS DRAWING CONTAINS INFORMATION THAT IS PROPRIETARY TO MOLEX INCORPORATED AND SHOULD NOT BE USED WITHOUT WRITTEN PERMISSION

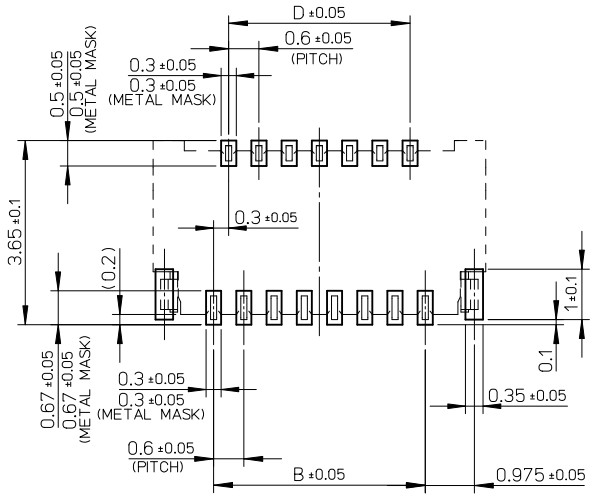

推奨基板寸法

RECOMMENDED P.W.B. PATTERN LAYOUT

推奨メタルマスク厚：t=0.1mm

RECOMMENDED METAL MASK THICKNESS:t=0.1mm

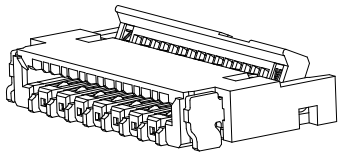

ISO VIEW（参考）

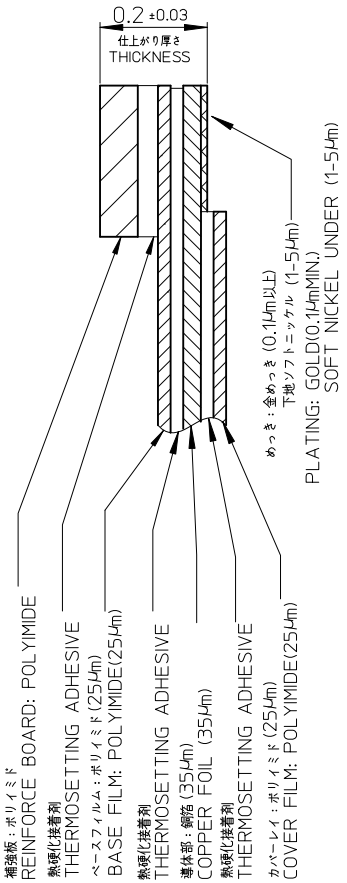

FPC構成推奨仕様

STRUCTURE OF FPC

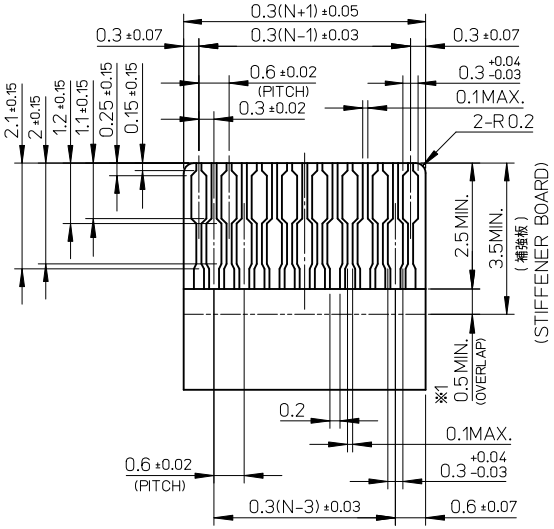

N：極数
N:CIRCUITS

適合する金めっきFPC推奨寸法

APPLICABLE FPC OF GOLD PATING RECOMMENDED DIMENSION

（仕上がり厚さ：0.2±0.03）

(THICKNESS:0.2±0.03)

FPCについて：

抜き方向は、導体側から補強板側を推奨致します。
補強フィルム材質は、ポリイミドを推奨致します。
接着剤は熱硬化接着剤を推奨致します。
尚、接着剤の接点部への付着は導通不良の原因になりますので、
染み出しが無い様、お願い致します。

ABOUT FPC:

RECOMMENDED PUNCHER DIRECTION:
FROM CONDUCTOR SIDE TO STIFFNER FILM SIDE.
RECOMMENDED MATERIAL:
STIFFENER FILM : POLYIMIDE
BONDING AGENT : THERMOSETTING AGENT
PLEASE PUT APPROPRIATE AMOUNT OF ADHESIVE ON ADHEREND BECAUSE THERE IS A POSSIBILITY THAT THE EXTRA ADHESIVE CAUSES THE DEFECT IN ELECTRICAL CONTINUITY.

※1 補強板の長さが図面通りに確保できない場合は、カバーレイと補強板のオーバーラップ寸法を0.5mm以上としてください。
WHEN STIFFNER BOARD DIMENSION CAN NOT SECURE AS DRAWING, PLEASE GIVE THE OVERLAP SIZE OF COVER FILM AND STIFFNER BOARD AS 0.5mm MINIMUM.

REVISED
EC NO: J2012-0121
DRWN:YUHASEGAWA 2011/07/25
CH'KD:KTAKAHASHI 2011/07/25
APPR:KMORIKAWA 2011/07/28
DESCRIPTION
REV C

GENERAL TOLERANCES (UNLESS SPECIFIED)

10 UNDER	±0.2
10 OVER 30 UNDER	±0.25
30 OVER	±0.3
ANGULAR ±1 °	

DRAFT WHERE APPLICABLE MUST REMAIN WITHIN DIMENSIONS

DIMENSION STYLE: MM ONLY	SCALE: -/-	DESIGN UNITS: METRIC	THIRD ANGLE PROJECTION
DRAWN BY: HONO	DATE: 2009/07/21	TITLE: 0.3 FPC CONN. BACK FLIP HOUSING ASSY	
CHECKED BY: HSHIMOYAMA	DATE: 2009/07/21		
APPROVED BY: KMORIKAWA	DATE: 2009/07/21	molex MOLEX INCORPORATED	
MATERIAL NO.: SEE TABLE		DOCUMENT NO.: SD-502598-001	SHEET NO.: 2 OF 2
SIZE: A3	THIS DRAWING CONTAINS INFORMATION THAT IS PROPRIETARY TO MOLEX INCORPORATED AND SHOULD NOT BE USED WITHOUT WRITTEN PERMISSION		

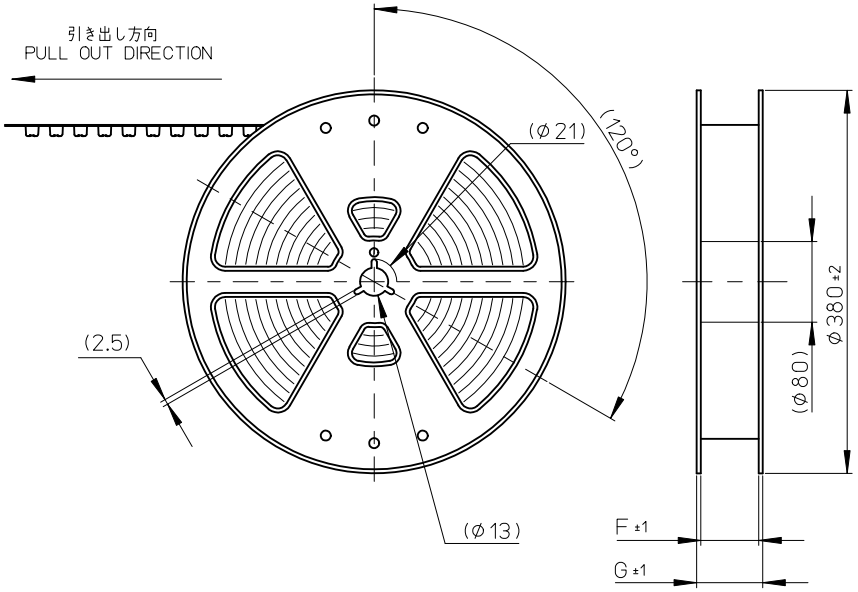

注記）
NOTES

1.製品番号502598-**11の詳細寸法は、製品単体図面を参照下さい。
IN THE PACAKGE PART NUMBER 502598-**11 DETAIL DIMENSIONS, SEE SALES DRAWING FOR CONNECTOR.

2.梱包数量：3000個/リール
NUMBER OF CONNECTORS : 3000 PCS/REEL

3.リードテープ長さ
LEAD TAPE LENGTH

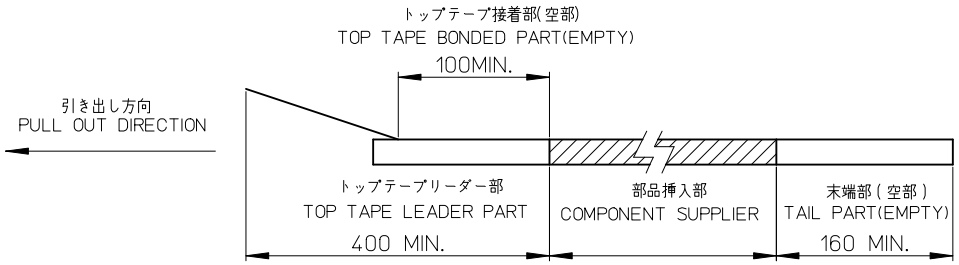

4.カバーテープの剥離強度については、IEC60286-3に準拠
COVER TAPE PEEL FORCE IS DEFINED BY IEC 60286-3.

5.材料
MATERIAL
キャリアテープ：ポリスチレン(PS)
CARRIER TAPE:POLYSTYRENE(PS)
トップテープ：ポリエチレンテレフタラート(PET)、他
TOP TAPE :POLYETHYLENE TELEPHTHALATE(PET), OTHERS
リール：ポリスチレン(PS)
REEL:POLYSTYLENE(PS)

6.ELV及びRoHS適合品
ELV AND RoHS COMPLIANT

REVISED			
EC NO: J2011-0028			
DRWN:HONO01	2009/07/21		
CH'KD:HSHIMOYAMA	2009/07/21		
APPR:KMORIKAWA	2010/07/08		
B		REV	DESCRIPTION

GENERAL TOLERANCES (UNLESS SPECIFIED)	
10 UNDER	± ---
10 OVER 30 UNDER	± ---
30 OVER	± ---
ANGULAR ±1 °	
DRAFT WHERE APPLICABLE MUST REMAIN WITHIN DIMENSIONS	

DIMENSION STYLE: MM ONLY	SCALE: ---	DESIGN UNITS: METRIC	THIRD ANGLE PROJECTION
DRAWN BY: HONO — DATE: 2009/07/21	TITLE: 0.3 FPC CONN. BACK FLIP TAPING PACKAGE (502598-**11 SERIES)		
CHECKED BY: HSHIMOYAMA — DATE: 2009/07/21			
APPROVED BY: KMORIKAWA — DATE: 2009/07/21	molex MOLEX INCORPORATED		
MATERIAL NO.: SEE TABLE	DOCUMENT NO.: SD-502598-002	SHEET NO.: 1 OF 2	
SIZE: A3	THIS DRAWING CONTAINS INFORMATION THAT IS PROPRIETARY TO MOLEX INCORPORATED AND SHOULD NOT BE USED WITHOUT WRITTEN PERMISSION		

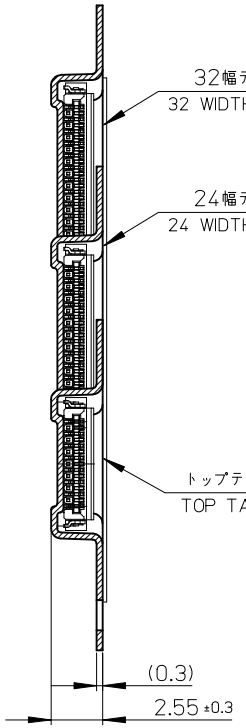

断面 Y-Y
SECTION Y-Y

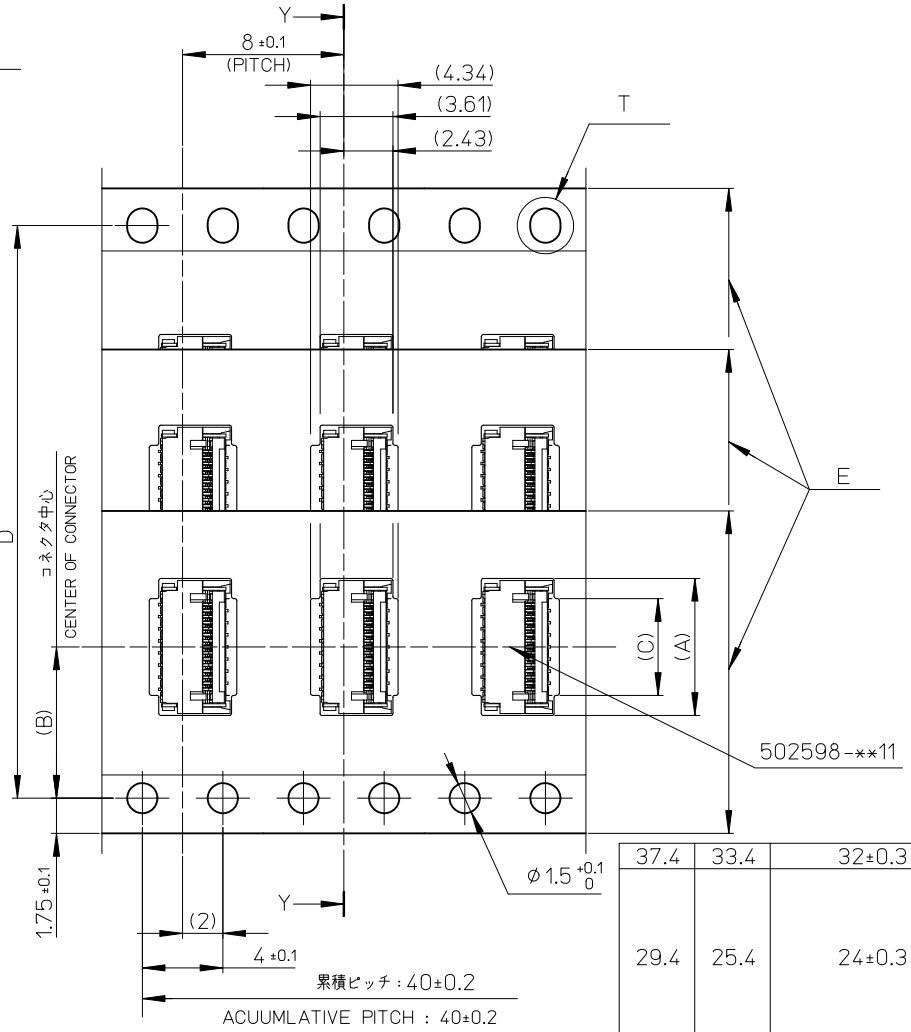

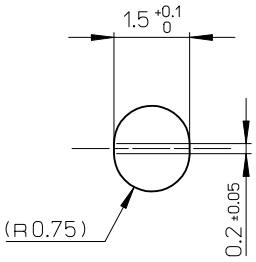

T部詳細
DETAIL T

G	F	E キャリアテープ幅 EMBOSSED TAPE WIDTH	D	C	B	A	製品番号 MATERIAL NO.	極数 CIRCUITS
37.4	33.4	32±0.3	28.4	15.7	14.2	17.6	502598-5191	51
29.4	25.4	24±0.3	〃	13.9	11.5	15.8	502598-4591	45
				12.1		14	502598-3991	39
				10.3		12.2	502598-3391	33
				9.1		11	502598-2991	29
				8.5		10.4	502598-2791	27
				7.9		9.8	502598-2591	25
				7.3		9.2	502598-2391	23

REVISED
EC NO: J2011-0028
DRWN:HONO01 2010/07/06
CH'KD:HSHIMOYAMA 2009/07/21
APPR:KMORIKAWA 2010/07/08
DESCRIPTION
REV B

GENERAL TOLERANCES (UNLESS SPECIFIED)

10 UNDER	± ---
10 OVER 30 UNDER	± ---
30 OVER	± ---
ANGULAR ±1 °	

DRAFT WHERE APPLICABLE MUST REMAIN WITHIN DIMENSIONS

DIMENSION STYLE: MM ONLY
SCALE: ---
DESIGN UNITS: METRIC
THIRD ANGLE PROJECTION

DRAWN BY: HONO DATE: 2009/07/21
CHECKED BY: HSHIMOYAMA DATE: 2009/07/21
APPROVED BY: KMORIKAWA DATE: 2009/07/21

TITLE: 0.3 FPC CONN. BACK FLIP TAPING PACKAGE (502598-**11 SERIES)

MOLEX INCORPORATED

MATERIAL NO.: SEE TABLE
DOCUMENT NO.: SD-502598-002
SHEET NO.: 2 OF 2
SIZE: A3

THIS DRAWING CONTAINS INFORMATION THAT IS PROPRIETARY TO MOLEX INCORPORATED AND SHOULD NOT BE USED WITHOUT WRITTEN PERMISSION

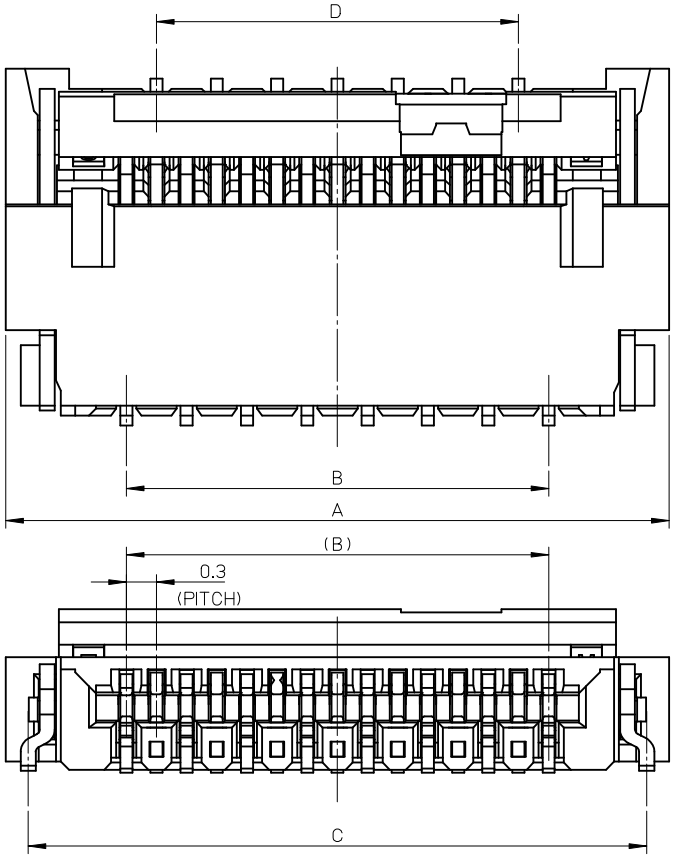

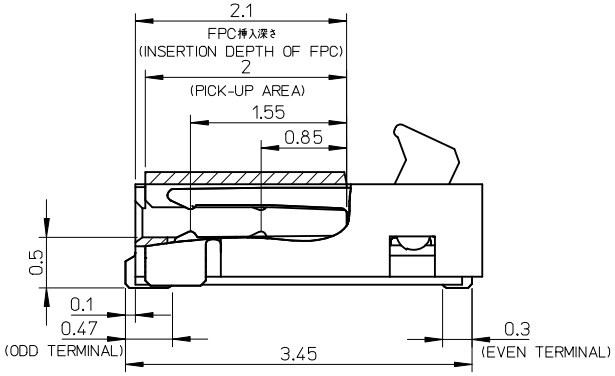

断面図

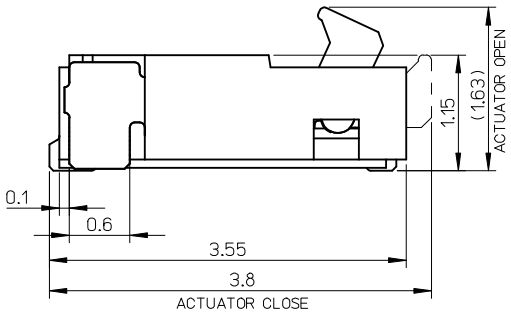

注記 NOTES:

1.材質 MATERIAL
ハウジング：LCP(液晶ポリマー)、白色、ガラス充填、UL94V-0
HOUSING:LIQUID CRYSTAL POLYMER,WHITE(NATURAL)
GLASS FILLED,UL94V-0
アクチュエータ：ポリアミド樹脂
黒色、ガラス充填、UL94HB
ACTUATOR: POLYAMIDE
BLACK GLASS FILLED,UL94HB
ターミナル：燐青銅(t=0.12)
TERMINAL:PHOSPHOR BRONZE(t=0.12)
金具：燐青銅(t=0.15)
NAIL:PHOSPHOR BRONZE(t=0.15)

2.めっき仕様 PLATING
ターミナル TERMINAL
接点部：金めっき 0.1μm以上
CONTACT AREA: GOLD 0.1 MICROMETER MINIMUM
半田付け部：金めっき
SOLDER TAIL AREA: GOLD
下地めっき:ニッケル 1.0μm以上
UNDER PLATING:NICKEL 1.0 MICROMETER MINIMUM
金具 NAIL
錫めっき 1.0μm以上
TIN PLATING 1.0 MICROMETER MINIMUM
下地めっき:ニッケル 1.0μm以上
UNDER PLATING:NICKEL 1.0 MICROMETER MINIMUM

3.平坦度は、0.1ミリ以下とする。
TAILS COPLANARITY TO BE 0.1 MAXIMUM.

4.ELV及びRoHS適合品
ELV AND RoHS COMPLIANT

5.本製品は502598-**91の端子材料変更品である。
THIS PRODUCT IS CHANGE OF TERMINAL MATERIAL
FOR 502598-**91.

重さ (g) WEIGHT(g)	D	C	B	A	EMBOSSED PACKAGE オーダー番号 ORDER NO.	極 数 CIRCUITS
0.125	14.4	16.95	15	17.4	502598-5193	51
0.112	12.6	15.15	13.2	15.6	502598-4593	45
0.105	11.4	13.95	12.0	14.4	502598-4193	41
0.098	10.8	13.35	11.4	13.8	502598-3993	39
0.085	9	11.55	9.6	12	502598-3393	33
0.077	7.8	10.35	8.4	10.8	502598-2993	29
0.072	7.2	9.75	7.8	10.2	502598-2793	27
0.068	6.6	9.15	7.2	9.6	502598-2593	25
0.063	6	8.55	6.6	9	502598-2393	23
0.048	4.2	6.75	4.8	7.2	502598-1793	17
0.043	3.6	6.15	4.2	6.6	502598-1593	15

CONNECTOR SERIES NO. 502598-**21

REV	DESCRIPTION	
B	REVISED	
	EC NO: J2014-0146	
	DRWN:KNAGUMO	2013/07/25
	CH'KD:KTAKAHASHI	2013/08/30
	APPR:YNOGAWA	2013/08/28

GENERAL TOLERANCES (UNLESS SPECIFIED)

10 UNDER	±0.2
10 OVER 30 UNDER	±0.25
30 OVER	±0.3
ANGULAR ±1 °	

DRAFT WHERE APPLICABLE MUST REMAIN WITHIN DIMENSIONS

DIMENSION STYLE: MM ONLY	SCALE: ---	DESIGN UNITS: METRIC	THIRD ANGLE PROJECTION
DRAWN BY: KMIYAHARA	DATE: 2012/07/18	TITLE: 0.3 FPC CONN. BACK FLIP HOUSING ASSY	
CHECKED BY: KTAKAHASHI	DATE: 2012/07/18		
APPROVED BY: KMORIKAWA	DATE: 2012/08/01	molex	
MATERIAL NO.: SEE TABLE	DOCUMENT NO.: SD-502598-003		SHEET NO.: 1 OF 2
SIZE: A3	THIS DRAWING CONTAINS INFORMATION THAT IS PROPRIETARY TO MOLEX INCORPORATED AND SHOULD NOT BE USED WITHOUT WRITTEN PERMISSION		

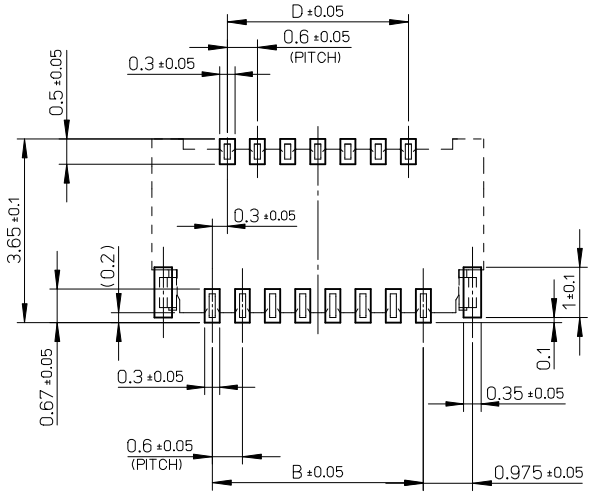

推奨基板寸法

RECOMMENDED P.W.B. PATTERN LAYOUT

マスク厚：100 μm
マスク開口率：100%
SCREEN THICKNESS：100 μm
SCREEN OPEN RATIO：100%

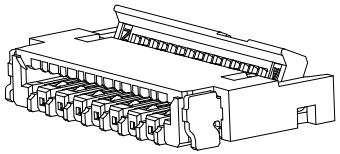

ISO VIEW （参考）

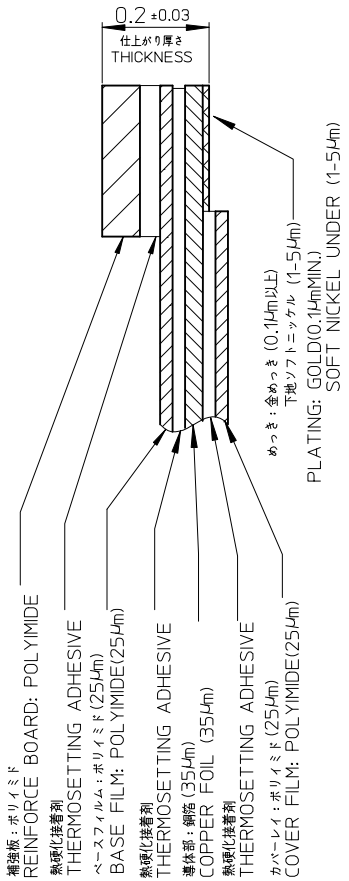

FPC構成推奨仕様

STRUCTURE OF FPC

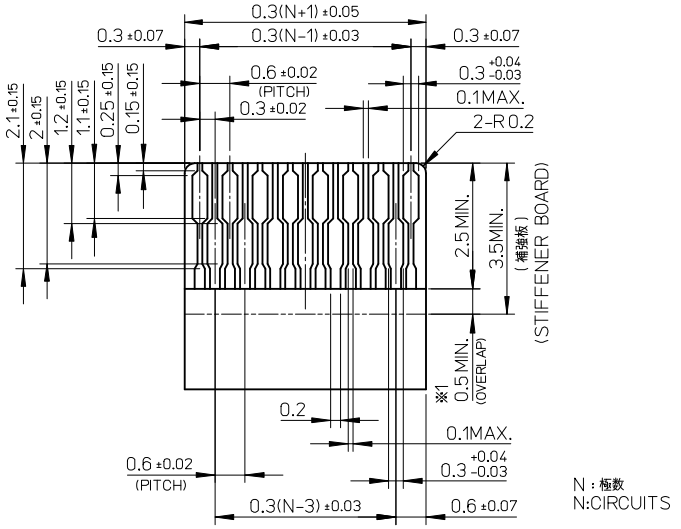

N：極数
N:CIRCUITS

適合する金めっきFPC推奨寸法
APPLICABLE FPC OF GOLD PATING
RECOMMENDED DIMENSION

（仕上がり厚さ：0.2±0.03）
(THICKNESS:0.2±0.03)

FPCについて：
抜き方向は、導体側から補強板側を推奨致します。
補強フィルム材質は、ポリイミドを推奨致します。
接着剤は熱硬化接着剤を推奨致します。
尚、接着剤の接点部への付着は導通不良の原因になりますので、
染み出しが無い様、お願い致します。

ABOUT FPC:
RECOMMENDED PUNCHER DIRECTION:
FROM CONDUCTOR SIDE TO STIFFNER FILM SIDE.
RECOMMENDED MATERIAL:
STIFFENER FILM : POLYIMIDE
BONDING AGENT : THERMOSETTING AGENT
PLEASE PUT APPROPRIATE AMOUNT OF ADHESIVE ON ADHEREND BECAUSE THERE IS A POSSIBILITY THAT THE EXTRA ADHESIVE CAUSES THE DEFECT IN ELECTRICAL CONTINUITY.

REVISED			
EC NO: J2014-0146			
DRWN:KNAGUMO	2013/07/25		
CHKD:KTAKAHASHI	2013/08/30		
APPR:YNOGAWA	2013/08/28		
B		REV	DESCRIPTION

GENERAL TOLERANCES (UNLESS SPECIFIED)

10 UNDER	±0.2
10 OVER 30 UNDER	±0.25
30 OVER	±0.3
ANGULAR ±1 °	

DRAFT WHERE APPLICABLE MUST REMAIN WITHIN DIMENSIONS

DIMENSION STYLE	SCALE	DESIGN UNITS	
MM ONLY	---	METRIC	THIRD ANGLE PROJECTION

DRAWN BY KMIYAHARA	DATE 2012/07/18	TITLE 0.3 FPC CONN. BACK FLIP HOUSING ASSY
CHECKED BY KTAKAHASHI	DATE 2012/07/18	
APPROVED BY KMORIKAWA	DATE 2012/08/01	molex
MATERIAL NO. SEE TABLE	DOCUMENT NO. SD-502598-003	SHEET NO. 2 OF 2

SIZE A3

THIS DRAWING CONTAINS INFORMATION THAT IS PROPRIETARY TO MOLEX INCORPORATED AND SHOULD NOT BE USED WITHOUT WRITTEN PERMISSION

Мы молодая и активно развивающаяся компания в области поставок электронных компонентов. Мы поставляем электронные компоненты отечественного и импортного производства напрямую от производителей и с крупнейших складов мира.

Благодаря сотрудничеству с мировыми поставщиками мы осуществляем комплексные и плановые поставки широчайшего спектра электронных компонентов.

Собственная эффективная логистика и склад в обеспечивает надежную поставку продукции в точно указанные сроки по всей России.

Мы осуществляем техническую поддержку нашим клиентам и предпродажную проверку качества продукции. На все поставляемые продукты мы предоставляем гарантию .

Осуществляем поставки продукции под контролем ВП МО РФ на предприятия военно-промышленного комплекса России , а также работаем в рамках 275 ФЗ с открытием отдельных счетов в уполномоченном банке. Система менеджмента качества компании соответствует требованиям ГОСТ ISO 9001.

Минимальные сроки поставки, гибкие цены, неограниченный ассортимент и индивидуальный подход к клиентам являются основой для выстраивания долгосрочного и эффективного сотрудничества с предприятиями радиоэлектронной промышленности, предприятиями ВПК и научно-исследовательскими институтами России.

С нами вы становитесь еще успешнее!

Наши контакты:

Телефон: +7 812 627 14 35

Электронная почта: sales@st-electron.ru

Адрес: 198099, Санкт-Петербург, Промышленная ул, дом № 19, литера Н, помещение 100-Н Офис 331