FAIRCHILD™

Is Now Part of

ON Semiconductor®

To learn more about ON Semiconductor, please visit our website at
www.onsemi.com

Please note: As part of the Fairchild Semiconductor integration, some of the Fairchild orderable part numbers will need to change in order to meet ON Semiconductor's system requirements. Since the ON Semiconductor product management systems do not have the ability to manage part nomenclature that utilizes an underscore (_), the underscore (_) in the Fairchild part numbers will be changed to a dash (-). This document may contain device numbers with an underscore (_). Please check the ON Semiconductor website to verify the updated device numbers. The most current and up-to-date ordering information can be found at www.onsemi.com. Please email any questions regarding the system integration to Fairchild_questions@onsemi.com.

ON Semiconductor and the ON Semiconductor logo are trademarks of Semiconductor Components Industries, LLC dba ON Semiconductor or its subsidiaries in the United States and/or other countries. ON Semiconductor owns the rights to a number of patents, trademarks, copyrights, trade secrets, and other intellectual property. A listing of ON Semiconductor's product/patent coverage may be accessed at www.onsemi.com/site/pdf/Patent-Marking.pdf. ON Semiconductor reserves the right to make changes without further notice to any products herein. ON Semiconductor makes no warranty, representation or guarantee regarding the suitability of its products for any particular purpose, nor does ON Semiconductor assume any liability arising out of the application or use of any product or circuit, and specifically disclaims any and all liability, including without limitation special, consequential or incidental damages. Buyer is responsible for its products and applications using ON Semiconductor products, including compliance with all laws, regulations and safety requirements or standards, regardless of any support or applications information provided by ON Semiconductor. "Typical" parameters which may be provided in ON Semiconductor data sheets and/or specifications can and do vary in different applications and actual performance may vary over time. All operating parameters, including "Typicals" must be validated for each customer application by customer's technical experts. ON Semiconductor does not convey any license under its patent rights nor the rights of others. ON Semiconductor products are not designed, intended, or authorized for use as a critical component in life support systems or any FDA Class 3 medical devices or medical devices with a same or similar classification in a foreign jurisdiction or any devices intended for implantation in the human body. Should Buyer purchase or use ON Semiconductor products for any such unintended or unauthorized application, Buyer shall indemnify and hold ON Semiconductor and its officers, employees, subsidiaries, affiliates, and distributors harmless against all claims, costs, damages, and expenses, and reasonable attorney fees arising out of, directly or indirectly, any claim of personal injury or death associated with such unintended or unauthorized use, even if such claim alleges that ON Semiconductor was negligent regarding the design or manufacture of the part. ON Semiconductor is an Equal Opportunity/Affirmative Action Employer. This literature is subject to all applicable copyright laws and is not for resale in any manner.

January 2016

Single-Channel: 6N135M, 6N136M, HCPL4503M
Dual-Channel: HCPL2530M, HCPL2531M
8-Pin DIP High Speed Transistor Optocouplers

Features

- High Speed – 1 MBit/s
- Dual-Channel: HCPL2530M, HCPL2531M
- CTR Guaranteed 0°C to 70°C
- No Base Connection for Improved Noise Immunity (HCPL4503M)
- Superior CMR of 15,000 V/µs Minimum (HCPL4503M)
- Safety and Regulatory Approvals
  - UL1577, 5,000 VAC_{RMS} for 1 Minute
  - DIN EN/IEC60747-5-5

Applications

- Line Receivers
- Pulse Transformer Replacement
- Output Interface to CMOS-LSTTL-TTL
- Wide-Bandwidth Analog Coupling

Description

The 6N135M, 6N136M, HCPL4503M, HCPL2530M, and HCPL2531M optocouplers consist of an AlGaAs LED optically coupled to a high speed photodetector transistor for each channel.

A separate connection for the bias of the photodiode improves the speed by several orders of magnitude over conventional phototransistor optocouplers by reducing the base-collector capacitance of the input transistor.

The HCPL4503M has no internal connection to the phototransistor base for improved noise immunity. An internal noise shield provides superior common mode rejection of up to 50,000 V/µs.

Related Resources

- www.fairchildsemi.com/products/optoelectronics/
- www.fairchildsemi.com/pf/HC/HCPL0500.html
- www.fairchildsemi.com/pf/FO/FODM452.html
- www.fairchildsemi.com/pf/FO/FOD050L.html

Schematics

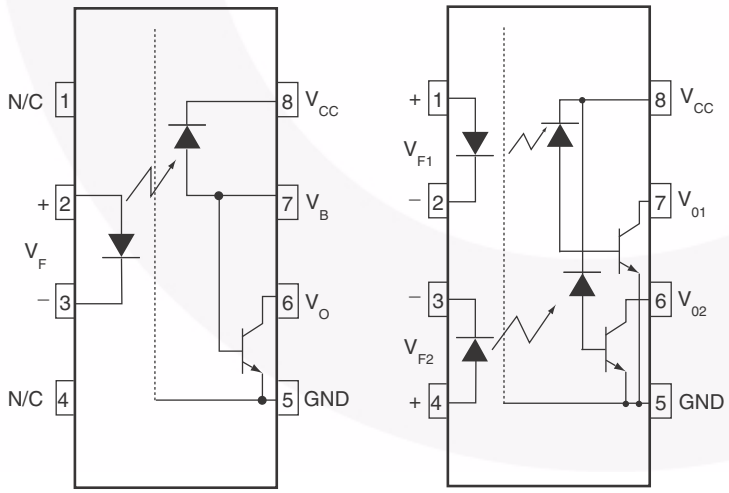

6N135M, 6N136M, HCPL4503M **HCPL2530M, HCPL2531M**

Pin 7 is not connected in the HCPL4503M

Figure 1. Schematics

Package Outlines

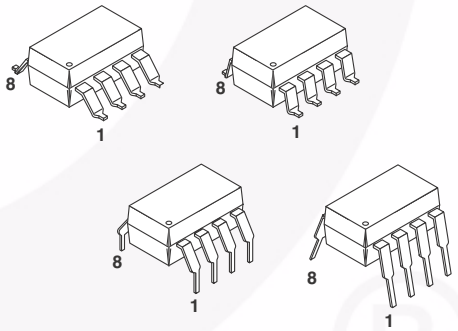

Figure 2. Package Outlines

Safety and Insulation Ratings

As per DIN EN/IEC 60747-5-5, this optocoupler is suitable for “safe electrical insulation” only within the safety limit data. Compliance with the safety ratings shall be ensured by means of protective circuits.

Parameter		Characteristics
Installation Classifications per DIN VDE 0110/1.89 Table 1, For Rated Mains Voltage	< 150 V_{RMS}	I–IV
	< 300 V_{RMS}	I–IV
	< 450 V_{RMS}	I–III
	< 600 V_{RMS}	I–III
Climatic Classification		40/100/21
Pollution Degree (DIN VDE 0110/1.89)		2
Comparative Tracking Index		175

Symbol	Parameter	Value	Unit
V_{PR}	Input-to-Output Test Voltage, Method A, V_{IORM} x 1.6 = V_{PR}, Type and Sample Test with t_m = 10 s, Partial Discharge < 5 pC	1,335	V_{peak}
	Input-to-Output Test Voltage, Method B, V_{IORM} x 1.875 = V_{PR}, 100% Production Test with t_m = 1 s, Partial Discharge < 5 pC	1,669	V_{peak}
V_{IORM}	Maximum Working Insulation Voltage	890	V_{peak}
V_{IOTM}	Highest Allowable Over-Voltage	6,000	V_{peak}
	External Creepage	≥ 8.0	mm
	External Clearance	≥ 7.4	mm
	External Clearance (for Option TV, 0.4" Lead Spacing)	≥ 10.16	mm
DTI	Distance Through Insulation (Insulation Thickness)	≥ 0.5	mm
T_S	Case Temperature(1)	150	°C
$I_{S,INPUT}$	Input Current(1)	200	mA
$P_{S,OUTPUT}$	Output Power (Duty Factor ≤ 2.7%)(1)	300	mW
R_{IO}	Insulation Resistance at T_S, V_{IO} = 500 V(1)	> 10^9	Ω

Note:
1. Safety limit value - maximum values allowed in the event of a failure.

Absolute Maximum Ratings

Stresses exceeding the absolute maximum ratings may damage the device. The device may not function or be operable above the recommended operating conditions and stressing the parts to these levels is not recommended. In addition, extended exposure to stresses above the recommended operating conditions may affect device reliability. The absolute maximum ratings are stress ratings only. T_A = 25°C unless otherwise specified.

Symbol	Parameter	Test Conditions	Value	Unit
T_{STG}	Storage Temperature		-40 to +125	°C
T_{OPR}	Operating Temperature		-40 to +100	°C
T_J	Junction Temperature		-40 to +125	°C
T_{SOL}	Lead Solder Temperature		260 for 10 sec	°C
EMITTER				
I_F (avg)	DC/Average Forward Input Current Each Channel(2)		25	mA
I_F (pk)	Peak Forward Input Current Each Channel(3)	50% Duty Cycle, 1 ms P.W.	50	mA
I_F (trans)	Peak Transient Input Current Each Channel	≤ 1 µs P.W., 300 pps	1.0	A
V_R	Reverse Input Voltage Each Channel		5	V
P_D	Input Power Dissipation Each Channel(4)		45	mW
DETECTOR				
I_O (avg)	Average Output Current Each Channel		8	mA
I_O (pk)	Peak Output Current Each Channel		16	mA
V_{EBR}	Emitter-Base Reverse Voltage	6N135M and 6N136M	5	V
V_{CC}	Supply Voltage		-0.5 to 30	V
V_O	Output Voltage		-0.5 to 20	V
I_B	Base Current	6N135M and 6N136M	5	mA
P_D	Output Power Dissipation Each Channel(5)		100	mW

Notes:
2. Derate linearly above 70°C free-air temperature at a rate of 0.8 mA/°C.
3. Derate linearly above 70°C free-air temperature at a rate of 1.6 mA/°C.
4. Derate linearly above 70°C free-air temperature at a rate of 0.9 mW/°C.
5. Derate linearly above 70°C free-air temperature at a rate of 2.0 mW/°C.

Recommended Operating Conditions

The Recommended Operating Conditions table defines the conditions for actual device operation. Recommended operating conditions are specified to ensure optimal performance to the datasheet specifications. Fairchild does not recommend exceeding them or designing to absolute maximum ratings.

Symbol	Parameter	Min.	Max.	Unit
V_{CC}	Supply Voltage	4.5	20.0	V
T_A	Ambient Operating Temperature	0	70	°C
I_{FL}	Input Current, Low Level	0	250	µA
I_{FH}	Input Current, High Level(6)	6.3	20.0	mA

Note:
6. 6.3 mA is a guard banded value which allows for at least 20% CTR degradation. Initial input current threshold value is 5.0 mA or less.

Electrical Characteristics

V_{CC} = 5.0 V, T_A = 0°C to 70°C unless otherwise specified.

Individual Component Characteristics

Symbol	Parameter	Device	Test Conditions	Min.	Typ.	Max.	Unit
EMITTER							
V_F	Input Forward Voltage	All	I_F = 16 mA, T_A = 25°C		1.45	1.70	V
		All	I_F = 16 mA			1.80	
B_{VR}	Input Reverse Breakdown Voltage	All	I_R = 10 µA	5	21		V
$\Delta V_F/\Delta T_A$	Temperature Coefficient of Forward Voltage	All	I_F = 16 mA		-1.7		mV/°C
DETECTOR							
I_{OH}	Logic High Output Current	All	I_F = 0 mA, V_O = V_{CC} = 5.5 V, T_A = 25°C		0.0007	0.5	µA
		6N135M, 6N136M, HCPL4503M	I_F = 0 mA, V_O = V_{CC} = 15 V, T_A = 25°C		0.0019	1	
		All	I_F = 0 mA, V_O = V_{CC} = 15 V			50	
I_{CCL}	Logic Low Supply Current	6N135M, 6N136M, HCPL4503M	I_F = 16 mA, V_O = Open, V_{CC} = 15 V		163	200	µA
		HCPL2530M, HCPL2531M	I_{F1} = I_{F2} = 16 mA, V_O = Open, V_{CC} = 15 V			400	
I_{CCH}	Logic High Supply Current	6N135M, 6N136M, HCPL4503M	I_F = 0 mA, V_O = Open, V_{CC} = 15 V		0.0004	2	µA
		HCPL2530M, HCPL2531M	I_F = 0 mA, V_O = Open, V_{CC} = 15 V			4	

Electrical Characteristics (continued)

T_A = 0°C to 70°C unless otherwise specified.

Transfer Characteristics

Symbol	Parameter	Device	Test Conditions		Min.	Typ.	Max.	Unit
COUPLED								
CTR	Current Transfer Ratio(7)	6N135M, HCPL2530M	I_F = 16 mA, V_O = 0.4 V, V_{CC} = 4.5 V, T_A = 25°C		7	38	50	%
		6N136M, HCPL4503M, HCPL2531M			19	38	50	%
		6N135M	I_F = 16 mA, V_{CC} = 4.5 V	V_{OL} = 0.4 V	5			%
		HCPL2530M		V_{OL} = 0.5 V				
		6N136M, HCPL4503M		V_{OL} = 0.4 V	15			%
		HCPL2531M		V_{OL} = 0.5 V				
V_{OL}	Logic LOW Output Voltage	6N135M	I_F = 16 mA, I_O = 1.1 mA, V_{CC} = 4.5 V, T_A = 25°C			0.12	0.4	V
		HCPL2530M					0.5	
		6N136M, HCPL4503M	I_F = 16 mA, I_O = 3 mA, V_{CC} = 4.5 V, T_A = 25°C			0.20	0.4	
		HCPL2531M					0.5	
		6N135M, HCPL2530M	I_F = 16 mA, I_O = 0.8 mA, V_{CC} = 4.5 V			0.11	0.5	
		HCPL4503M, HCPL2531M	I_F = 16 mA, I_O = 2.4 mA, V_{CC} = 4.5 V			0.18	0.5	

Note:

7. Current Transfer Ratio is defined as a ratio of output collector current, I_O, to the forward LED input current, I_F, times 100%.

Electrical Characteristics (continued)

T_A = 0°C to 70°C unless otherwise specified.

Switching Characteristics

Symbol	Parameter	Device	Test Conditions	Min.	Typ.	Max.	Unit
t_{PHL}	Propagation Delay Time to Logic LOW	6N135M	T_A = 25°C, R_L = 4.1 kΩ, I_F = 16 mA(8) (Figure 15)		0.23	1.5	µs
		HCPL2530M			0.25		
		6N136M, HCPL4503M	T_A = 25°C, R_L = 1.9 kΩ, I_F = 16 mA(9) (Figure 15)		0.25	0.8	µs
		HCPL2531M			0.28		
		6N135M, HCPL2530M	R_L = 4.1 kΩ, I_F = 16 mA(8) (Figure 15)			2.0	µs
		6N136M, HCPL4503M, HCPL2531M	R_L = 1.9 kΩ, I_F = 16 mA(9) (Figure 15)			1.0	µs
t_{PLH}	Propagation Delay Time to Logic HIGH	6N135M	T_A = 25°C, R_L = 4.1 kΩ, I_F = 16 mA(8) (Figure 15)		0.45	1.5	µs
		HCPL2530M			0.29		
		6N136M, HCPL4503M	T_A = 25°C, R_L = 1.9 kΩ, I_F = 16 mA(9) (Figure 15)		0.26	0.8	µs
		HCPL2531M			0.18		
		6N135M, HCPL2530M	R_L = 4.1 kΩ, I_F = 16 mA(8) (Figure 15)			2.0	µs
		6N136M, HCPL4503M, HCPL2531M	R_L = 1.9 kΩ, I_F = 16 mA(9) (Figure 15)			1.0	µs
$\|CM_H\|$	Common Mode Transient Immunity at Logic High	6N135M, HCPL2530M	I_F = 0 mA, V_{CM} = 10 V_{P-P}, R_L = 4.1 kΩ, T_A = 25°C(10) (Figure 16)		10,000		V/µs
		6N136M, HCPL2531M	I_F = 0 mA, V_{CM} = 10 V_{P-P}, R_L = 1.9 kΩ, T_A = 25°C(10) (Figure 16)		10,000		
		HCPL4503M	I_F = 0 mA, V_{CM} = 1,500 V_{P-P}, R_L = 4.1 kΩ, T_A = 25°C(10) (Figure 16)	15,000	50,000		
$\|CM_L\|$	Common Mode Transient Immunity at Logic Low	6N135M, HCPL2530M	I_F = 16 mA, V_{CM} = 10 V_{P-P}, R_L = 4.1 kΩ, T_A = 25°C(10) (Figure 16)		10,000		V/µs
		6N136M, HCPL2531M	I_F = 16 mA, V_{CM} = 10 V_{P-P}, R_L = 1.9 kΩ(10) (Figure 16)		10,000		
		HCPL4503M	I_F = 0 mA, V_{CM} = 1,500 V_{P-P}, R_L = 4.1 kΩ, T_A = 25°C(10) (Figure 16)	15,000	50,000		

Notes:

8. The 4.1 kΩ load represents 1 LSTTL unit load of 0.36 mA and 6.1 kΩ pull-up resistor.
9. The 1.9 kΩ load represents 1 TTL unit load of 1.6 mA and 5.6 kΩ pull-up resistor.
10. Common mode transient immunity in logic high level is the maximum tolerable (positive) dV_{cm}/dt on the leading edge of the common mode pulse signal, V_{CM}, to assure that the output will remain in a logic high state (i.e., V_O > 2.0 V). Common mode transient immunity in logic low level is the maximum tolerable (negative) dV_{cm}/dt on the trailing edge of the common mode pulse signal, V_{CM}, to assure that the output will remain in a logic low state (i.e., V_O < 0.8 V).

Isolation Characteristics (T_A = 25°C unless otherwise specified.)

Symbol	Parameter	Device	Test Conditions	Min.	Typ.	Max.	Unit
V_{ISO}	Withstand Isolation Test Voltage	All	RH ≤ 50%, I_{I-O} ≤ 10 µA t = 1 minute, f = 50 Hz(11)(13)	5,000			VAC_{RMS}
R_{I-O}	Resistance (Input to Output)	All	V_{I-O} = 500 V_{DC}(11)		10^{11}		Ω
C_{I-O}	Capacitance (Input to Output)	All	f = 1 MHz, V_{I-O} = 0 V_{DC}(11)		1		pF
I_{I-I}	Input-Input Insulation Leakage Current	HCPL2530M, HCPL2531M	RH ≤ 45%, V_{I-I} = 500 V_{DC}, t = 5 s(12)		< 1		nA
R_{I-I}	Input-Input Resistance	HCPL2530M, HCPL2531M	V_{I-I} = 500 V_{DC}(12)		10^{12}		Ω
C_{I-I}	Input-Input Capacitance	HCPL2530M, HCPL2531M	f = 1 MHz(12)		0.2		pF

Notes:

11. Device is considered a two terminal device: pins 1, 2, 3 and 4 are shorted together and pins 5, 6, 7 and 8 are shorted together.
12. Measured between pins 1 and 2 shorted together, and pins 3 and 4 shorted together.
13. 5000 V_{RMS} for 1 minute duration is equivalent to 6000 V_{RMS} for 1 second duration.

Typical Performance Curves

For single-channel devices; 6N135M, 6N136M, and HCPL4503M.

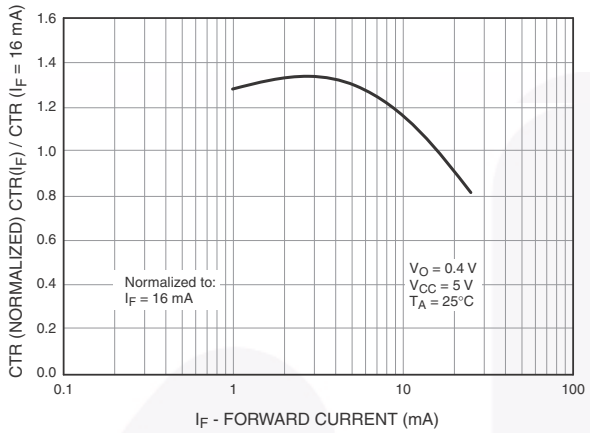

Figure 3. Normalized CTR vs. Forward Current

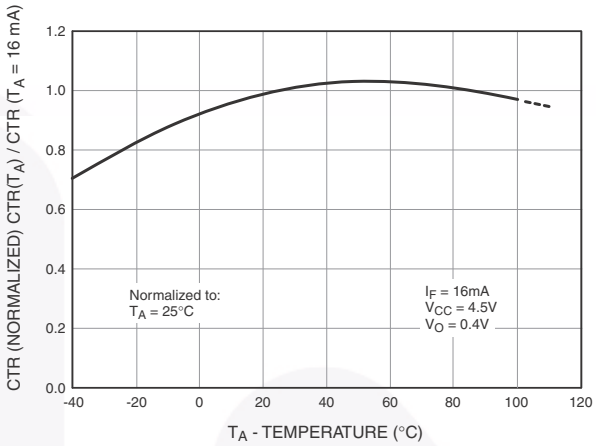

Figure 4. Normalized CTR vs. Temperature

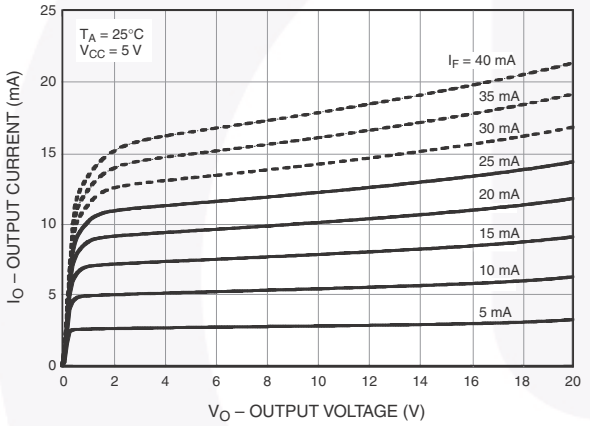

Figure 5. Output Current vs. Output Voltage

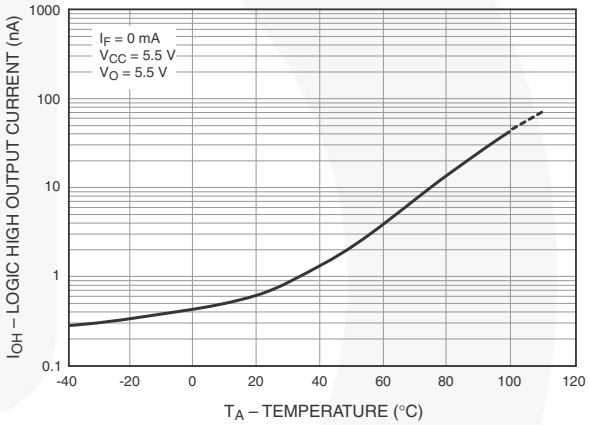

Figure 6. Logic High Output Current vs. Temperature

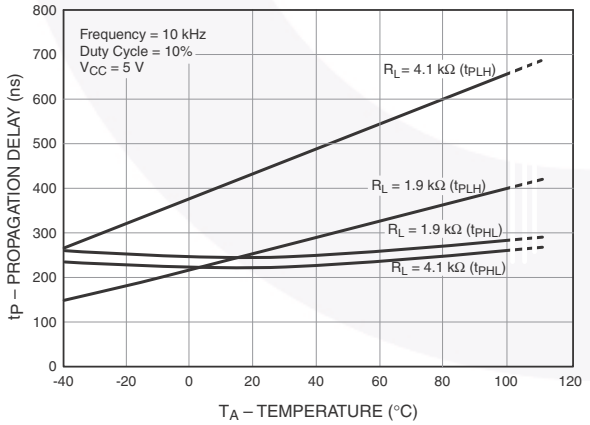

Figure 7. Propagation Delay vs. Temperature

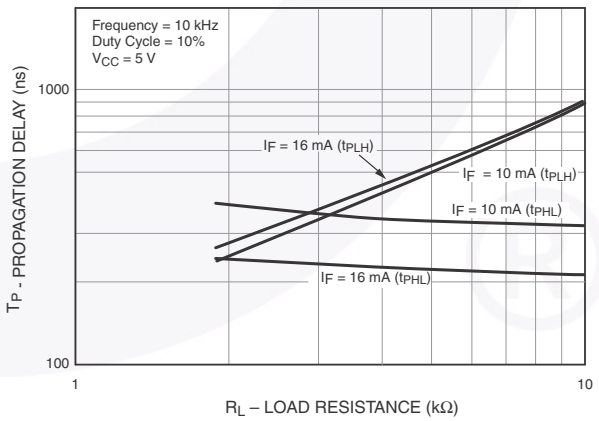

Figure 8. Propagation Delay vs. Load Resistance

Typical Performance Curves (Continued)

For dual-channel devices; HCPL2530M and HCPL2531M.

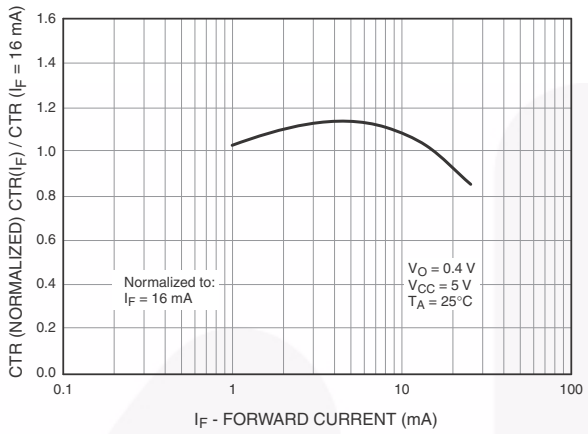

Figure 9. Normalized CTR vs. Forward Current

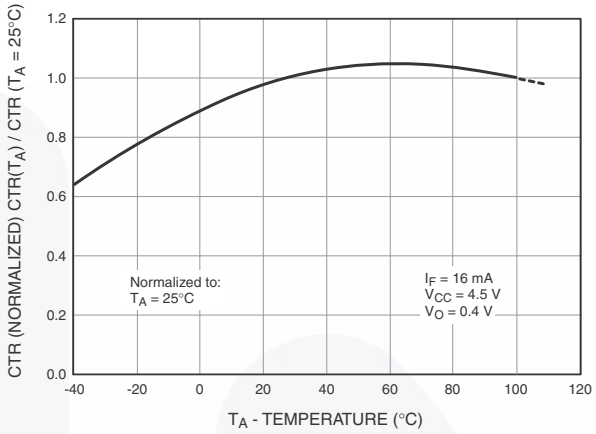

Figure 10. Normalized CTR vs. Temperature

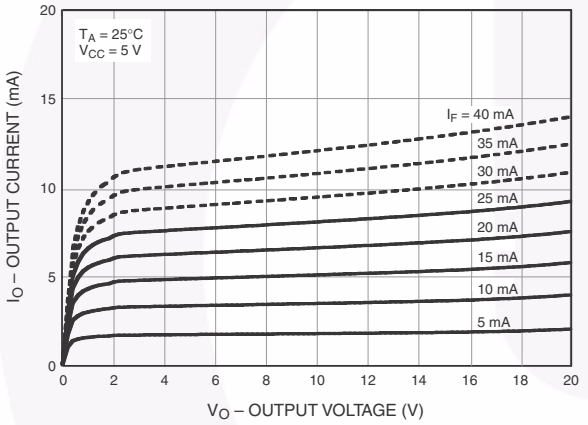

Figure 11. Output Current vs. Output Voltage

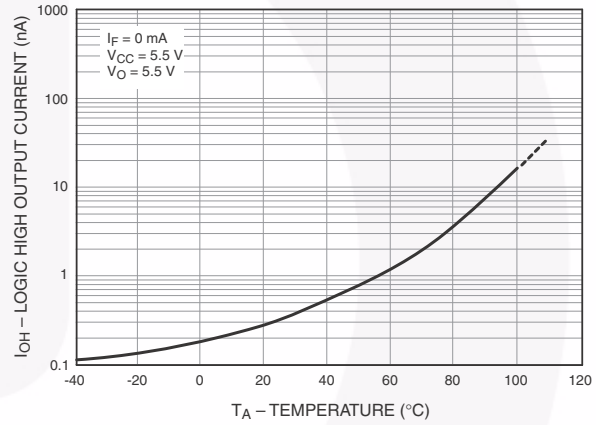

Figure 12. Logic High Output Current vs. Temperature

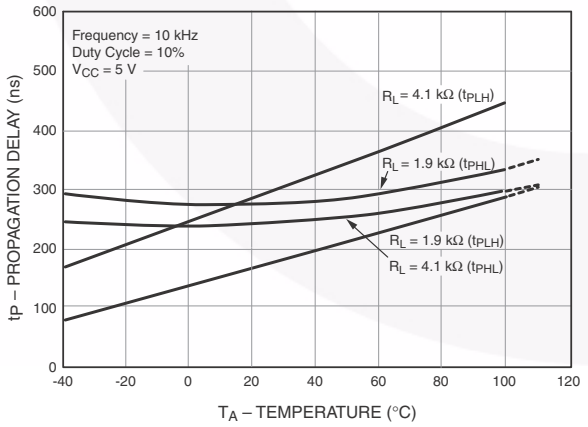

Figure 13. Propagation Delay vs. Temperature

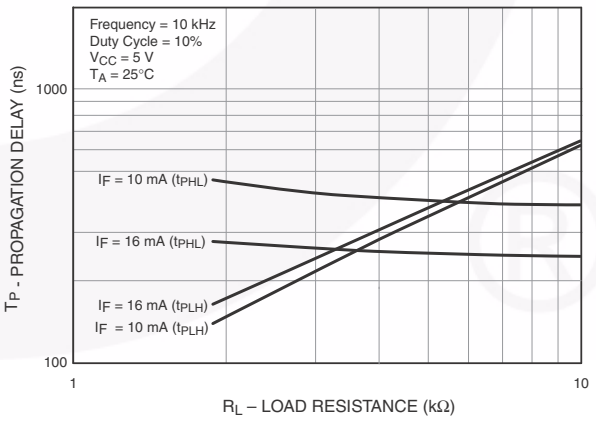

Figure 14. Propagation Delay vs. Load Resistance

Test Circuits

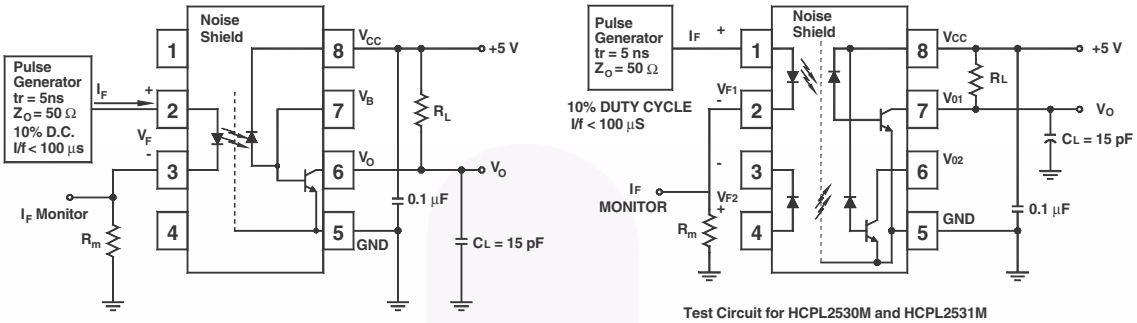

Test Circuit for 6N135M, 6N136M, and HCPL4503M

Test Circuit for HCPL2530M and HCPL2531M

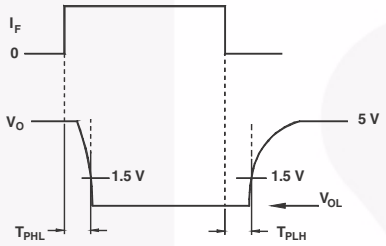

Figure 15. Switching Time Test Circuit

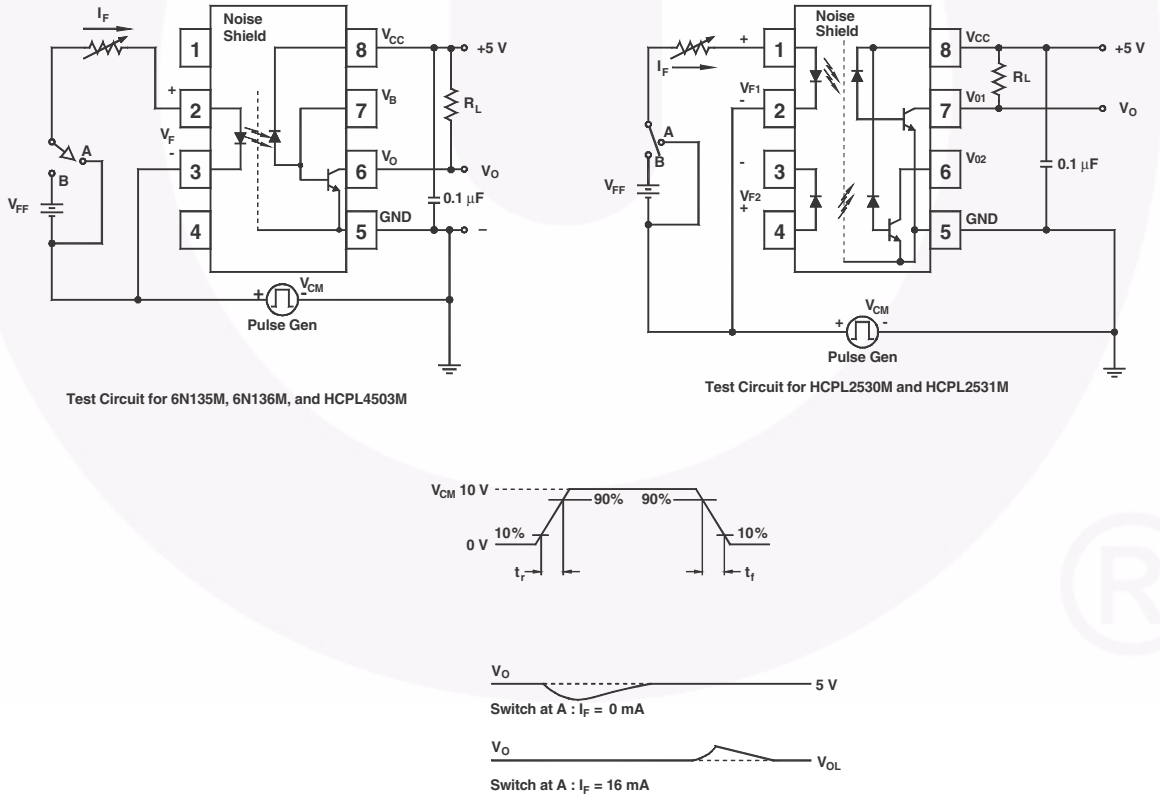

Test Circuit for 6N135M, 6N136M, and HCPL4503M

Test Circuit for HCPL2530M and HCPL2531M

Figure 16. Common Mode Immunity Test Circuit

Reflow Profile

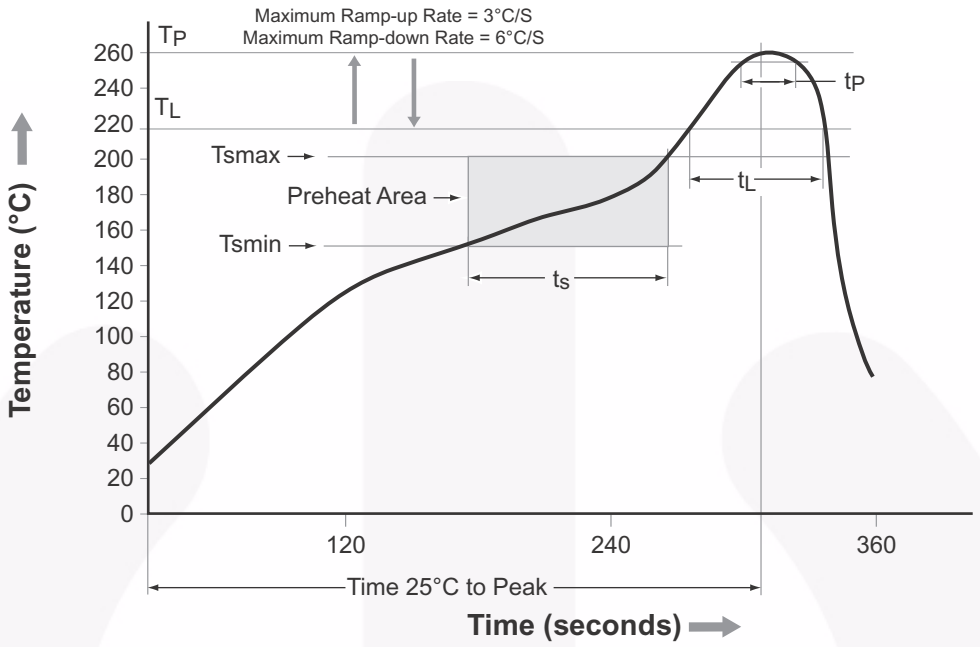

Profile Freature	Pb-Free Assembly Profile
Temperature Min. (Tsmin)	150°C
Temperature Max. (Tsmax)	200°C
Time (t_S) from (Tsmin to Tsmax)	60 to 120 s
Ramp-up Rate (t_L to t_P)	3°C/second maximum
Liquidous Temperature (T_L)	217°C
Time (t_L) Maintained Above (T_L)	60 to 150 s
Peak Body Package Temperature	260°C +0°C / –5°C
Time (t_P) within 5°C of 260°C	30 s
Ramp-down Rate (T_P to T_L)	6°C/s maximum
Time 25°C to Peak Temperature	8 minutes maximum

Figure 17. Relow Profile

Ordering Information

Part Number	Package	Packing Method
6N135M	DIP 8-Pin	Tube (50 units per tube)
6N135SM	SMT 8-Pin (Lead Bend)	Tube (50 units per tube)
6N135SDM	SMT 8-Pin (Lead Bend)	Tape and Reel (1,000 units per reel)
6N135VM	DIP 8-Pin, DIN EN/IEC 60747-5-5 Option	Tube (50 units per tube)
6N135SVM	SMT 8-Pin (Lead Bend), DIN EN/IEC 60747-5-5 Option	Tube (50 units per tube)
6N135SDVM	SMT 8-Pin (Lead Bend), DIN EN/IEC 60747-5-5 Option	Tape and Reel (1,000 units per reel)
6N135TVM	DIP 8-Pin, 0.4” Lead Spacing, DIN EN/IEC 60747-5-5 Option	Tube (50 units per tube)
6N135TSVM	SMT 8-Pin, 0.4” Lead Spacing, DIN EN/IEC 60747-5-5 Option	Tube (50 units per tube)
6N135TSR2VM	SMT 8-Pin, 0.4” Lead Spacing, DIN EN/IEC 60747-5-5 Option	Tape and Reel (1,000 units per reel)

Note:
The product orderable part number system listed in this table also applies to the 6N136M, HCPL4503M, HCPL2530M, and HCPL2531M product families.

Marking Information

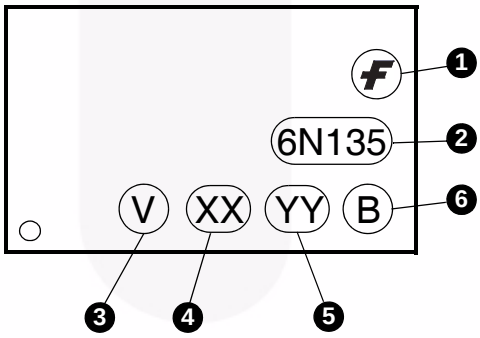

Figure 14. Top Mark

Definitions	
1	Fairchild Logo
2	Device Number
3	DIN EN/IEC60747-5-5 Option (only appears on component ordered with this option)
4	Two Digit Year Code, e.g., ‘15’
5	Two Digit Work Week Ranging from ‘01’ to ‘53’
6	Assembly Package Code

Carrier Tape Specifications (Option SD)

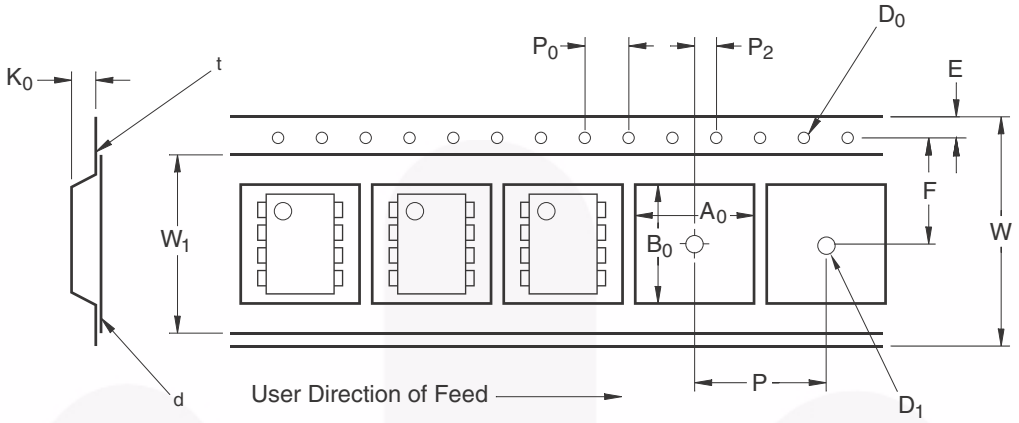

Symbol	Description	Dimension in mm
W	Tape Width	16.0 ± 0.3
t	Tape Thickness	0.30 ± 0.05
P_0	Sprocket Hole Pitch	4.0 ± 0.1
D_0	Sprocket Hole Diameter	1.55 ± 0.05
E	Sprocket Hole Location	1.75 ± 0.10
F	Pocket Location	7.5 ± 0.1
P_2		2.0 ± 0.1
P	Pocket Pitch	12.0 ± 0.1
A_0	Pocket Dimensions	10.30 ±0.20
B_0		10.30 ±0.20
K_0		4.90 ±0.20
W_1	Cover Tape Width	13.2 ± 0.2
d	Cover Tape Thickness	0.1 Maximum
	Maximum Component Rotation or Tilt	10°
R	Minimum Bending Radius	30

Carrier Tape Specifications (Option TSR2)

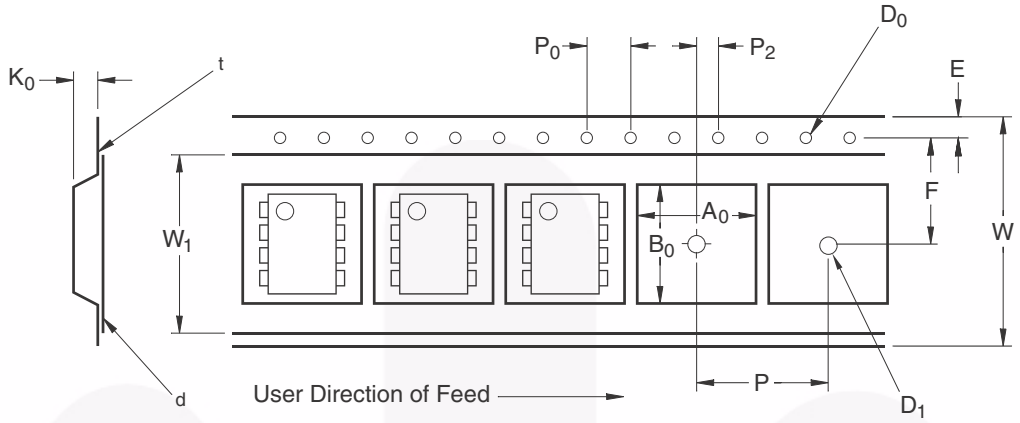

Symbol	Description	Dimension in mm
W	Tape Width	24.0 ± 0.3
t	Tape Thickness	0.40 ± 0.1
P_0	Sprocket Hole Pitch	4.0 ± 0.1
D_0	Sprocket Hole Diameter	1.55 ± 0.05
E	Sprocket Hole Location	1.75 ± 0.10
F	Pocket Location	11.5 ± 0.1
P_2		2.0 ± 0.1
P	Pocket Pitch	16.0 ± 0.1
A_0	Pocket Dimensions	12.80 ± 0.1
B_0		10.35 ± 0.1
K_0		5.7 ±0.1
W_1	Cover Tape Width	21.0 ± 0.1
d	Cover Tape Thickness	0.1 Maximum
	Maximum Component Rotation or Tilt	10°
R	Minimum Bending Radius	30

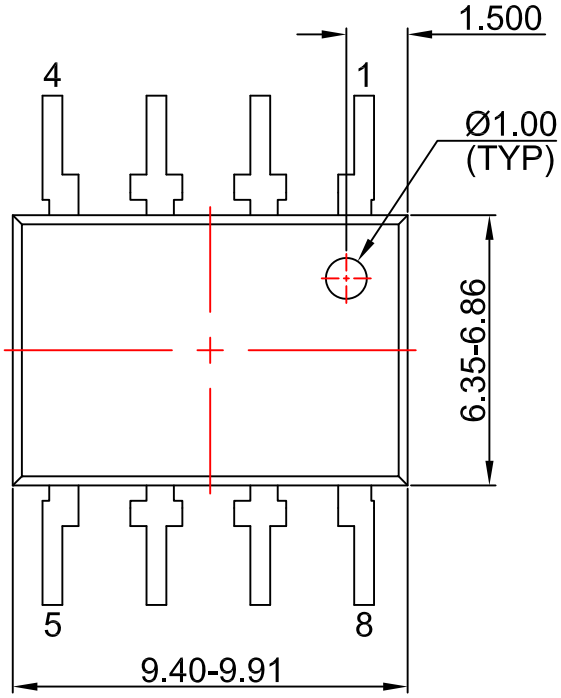

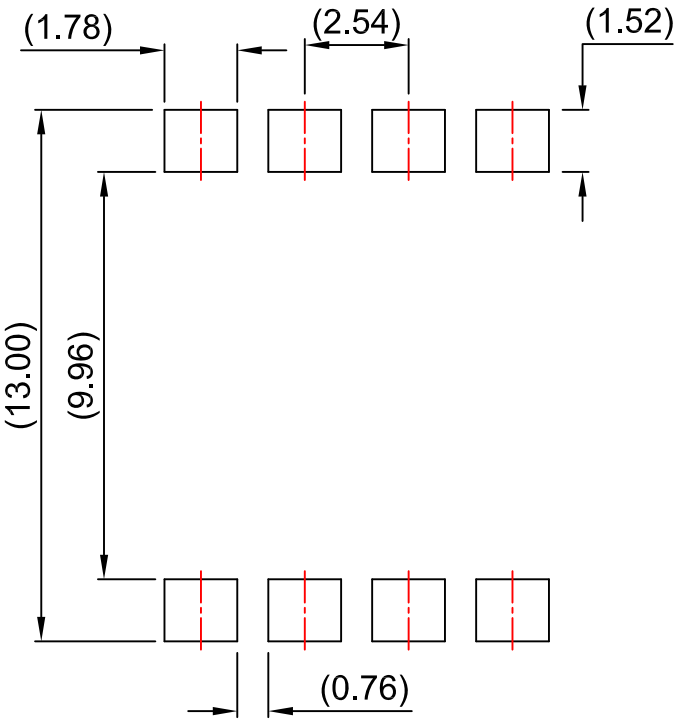

LAND PATTERN RECOMMENDATION

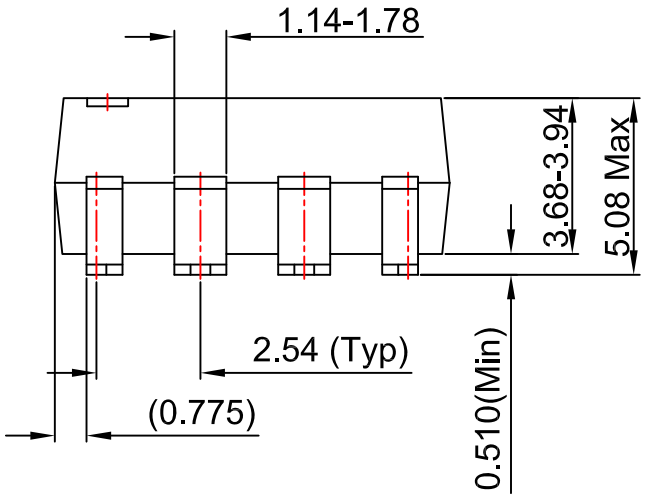

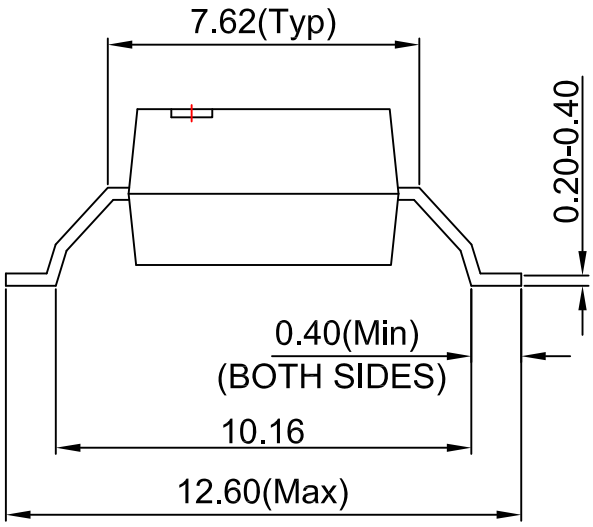

NOTES:

A) NO STANDARD APPLIES TO THIS PACKAGE

B) ALL DIMENSIONS ARE IN MILLIMETERS.

C) DIMENSIONS ARE EXCLUSIVE OF BURRS, MOLD FLASH, AND TIE BAR EXTRUSION

D) DWG FILENAME AND REVISION: MKT-N08Lrev2.

FAIRCHILD™

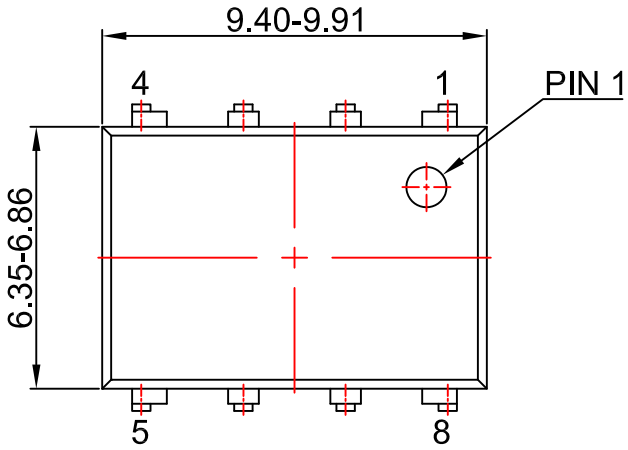

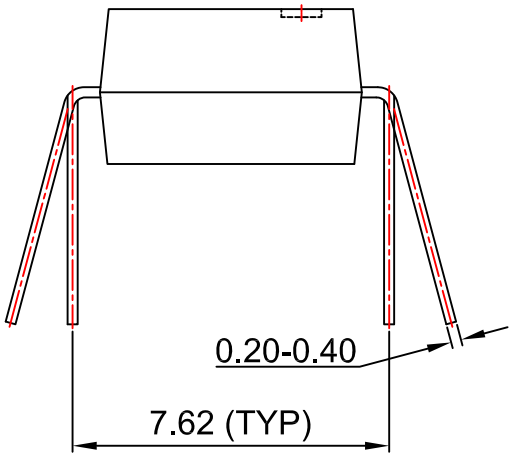

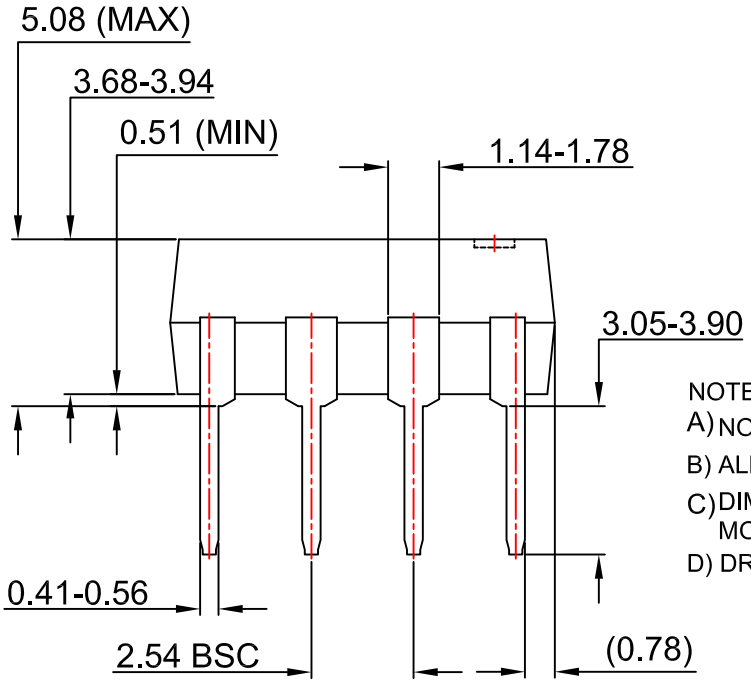

NOTES:

A) NO STANDARD APPLIES TO THIS PACKAGE

B) ALL DIMENSIONS ARE IN MILLIMETERS.

C) DIMENSIONS ARE EXCLUSIVE OF BURRS, MOLD FLASH, AND TIE BAR EXTRUSION

D) DRAWING FILENAME AND REVSION: MKT-N08GREV7

FAIRCHILD™

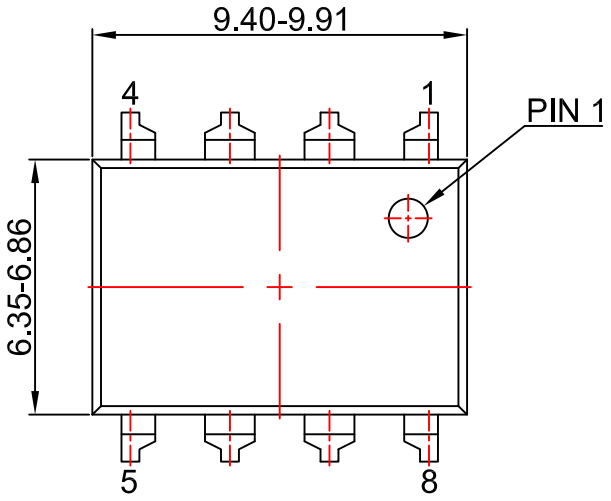

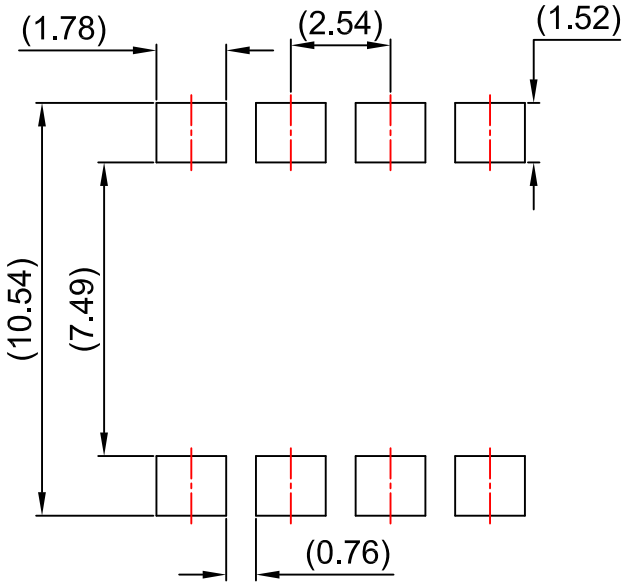

LAND PATTERN RECOMMENDATION

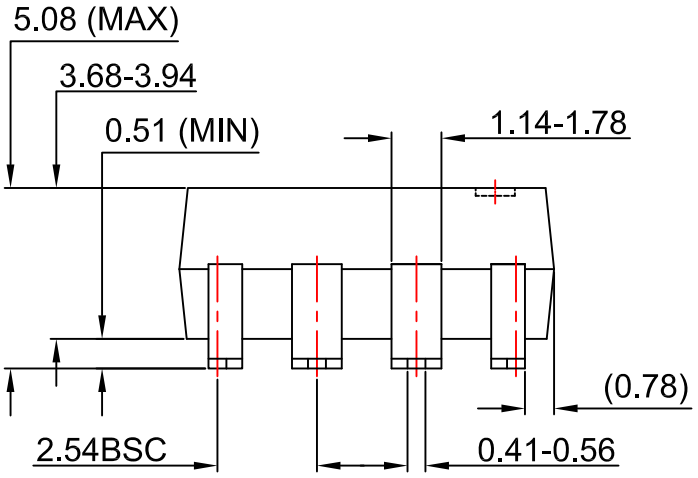

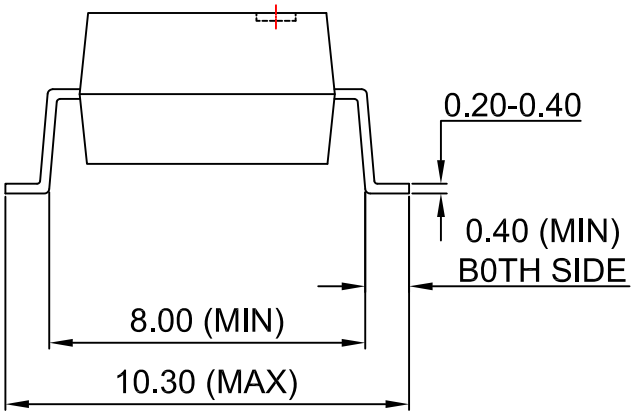

NOTES:

A) NO STANDARD APPLIES TO THIS PACKAGE

B) ALL DIMENSIONS ARE IN MILLIMETERS.

C) DIMENSIONS ARE EXCLUSIVE OF BURRS, MOLD FLASH, AND TIE BAR EXTRUSION

D) DRAWING FILENAME AND REVSION: MKT-N08Hrev7.

FAIRCHILD

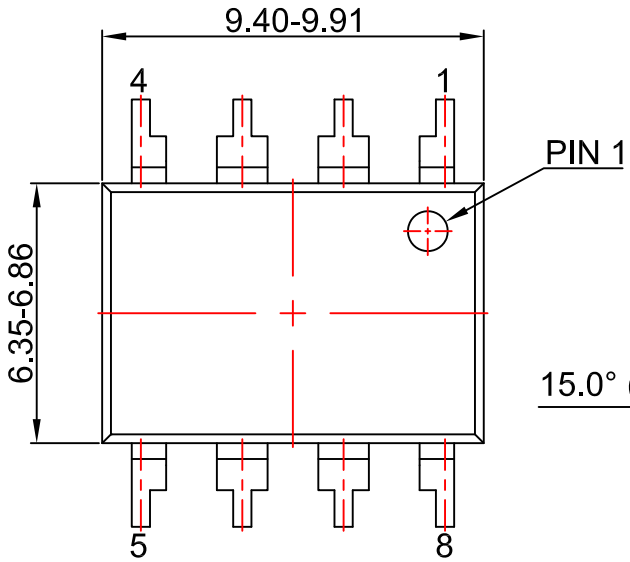

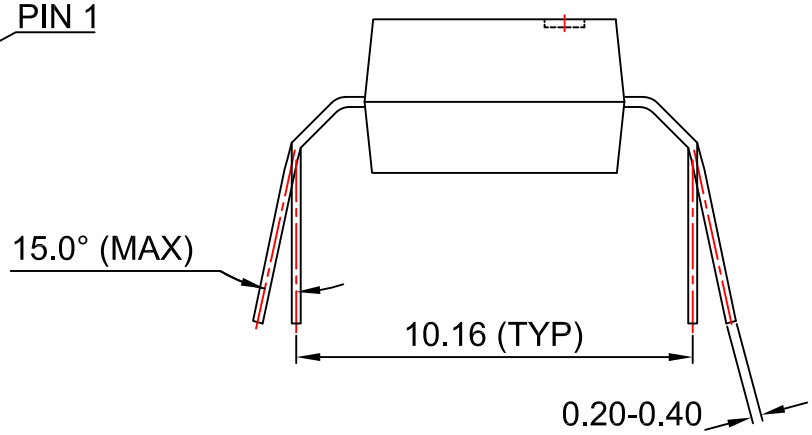

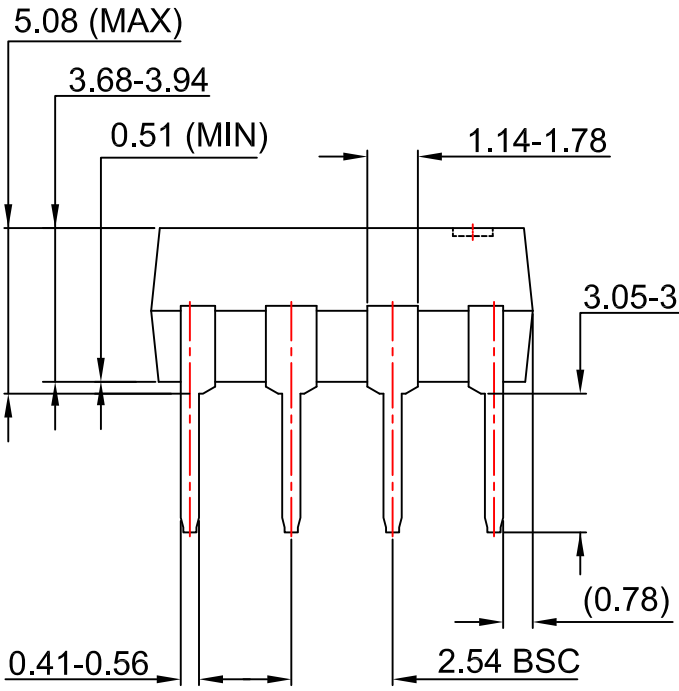

NOTES:

A) NO STANDARD APPLIES TO THIS PACKAGE

B) ALL DIMENSIONS ARE IN MILLIMETERS.

C) DIMENSIONS ARE EXCLUSIVE OF BURRS, MOLD FLASH, AND TIE BAR EXTRUSION

D) DRAWING FILENAME AND REVSION: MKT-N08REV7

FAIRCHILD™

ON Semiconductor and ON are trademarks of Semiconductor Components Industries, LLC dba ON Semiconductor or its subsidiaries in the United States and/or other countries. ON Semiconductor owns the rights to a number of patents, trademarks, copyrights, trade secrets, and other intellectual property. A listing of ON Semiconductor's product/patent coverage may be accessed at www.onsemi.com/site/pdf/Patent−Marking.pdf. ON Semiconductor reserves the right to make changes without further notice to any products herein. ON Semiconductor makes no warranty, representation or guarantee regarding the suitability of its products for any particular purpose, nor does ON Semiconductor assume any liability arising out of the application or use of any product or circuit, and specifically disclaims any and all liability, including without limitation special, consequential or incidental damages. Buyer is responsible for its products and applications using ON Semiconductor products, including compliance with all laws, regulations and safety requirements or standards, regardless of any support or applications information provided by ON Semiconductor. "Typical" parameters which may be provided in ON Semiconductor data sheets and/or specifications can and do vary in different applications and actual performance may vary over time. All operating parameters, including "Typicals" must be validated for each customer application by customer's technical experts. ON Semiconductor does not convey any license under its patent rights nor the rights of others. ON Semiconductor products are not designed, intended, or authorized for use as a critical component in life support systems or any FDA Class 3 medical devices or medical devices with a same or similar classification in a foreign jurisdiction or any devices intended for implantation in the human body. Should Buyer purchase or use ON Semiconductor products for any such unintended or unauthorized application, Buyer shall indemnify and hold ON Semiconductor and its officers, employees, subsidiaries, affiliates, and distributors harmless against all claims, costs, damages, and expenses, and reasonable attorney fees arising out of, directly or indirectly, any claim of personal injury or death associated with such unintended or unauthorized use, even if such claim alleges that ON Semiconductor was negligent regarding the design or manufacture of the part. ON Semiconductor is an Equal Opportunity/Affirmative Action Employer. This literature is subject to all applicable copyright laws and is not for resale in any manner.

PUBLICATION ORDERING INFORMATION

LITERATURE FULFILLMENT:
Literature Distribution Center for ON Semiconductor
19521 E. 32nd Pkwy, Aurora, Colorado 80011 USA
Phone: 303−675−2175 or 800−344−3860 Toll Free USA/Canada
Fax: 303−675−2176 or 800−344−3867 Toll Free USA/Canada
Email: orderlit@onsemi.com

N. American Technical Support: 800−282−9855 Toll Free USA/Canada
Europe, Middle East and Africa Technical Support:
Phone: 421 33 790 2910
Japan Customer Focus Center
Phone: 81−3−5817−1050

ON Semiconductor Website: **www.onsemi.com**

Order Literature: http://www.onsemi.com/orderlit

For additional information, please contact your local Sales Representative

Mouser Electronics

Authorized Distributor

Click to View Pricing, Inventory, Delivery & Lifecycle Information:

ON Semiconductor:
HCPL2531SDM HCPL2531SDVM HCPL2531SVM HCPL2531M HCPL2531TSVM HCPL2531TSR2VM HCPL2531TVM HCPL2531VM HCPL2531SM

Мы молодая и активно развивающаяся компания в области поставок электронных компонентов. Мы поставляем электронные компоненты отечественного и импортного производства напрямую от производителей и с крупнейших складов мира.

Благодаря сотрудничеству с мировыми поставщиками мы осуществляем комплексные и плановые поставки широчайшего спектра электронных компонентов.

Собственная эффективная логистика и склад в обеспечивает надежную поставку продукции в точно указанные сроки по всей России.

Мы осуществляем техническую поддержку нашим клиентам и предпродажную проверку качества продукции. На все поставляемые продукты мы предоставляем гарантию .

Осуществляем поставки продукции под контролем ВП МО РФ на предприятия военно-промышленного комплекса России , а также работаем в рамках 275 ФЗ с открытием отдельных счетов в уполномоченном банке. Система менеджмента качества компании соответствует требованиям ГОСТ ISO 9001.

Минимальные сроки поставки, гибкие цены, неограниченный ассортимент и индивидуальный подход к клиентам являются основой для выстраивания долгосрочного и эффективного сотрудничества с предприятиями радиоэлектронной промышленности, предприятиями ВПК и научно-исследовательскими институтами России.

С нами вы становитесь еще успешнее!

Наши контакты:

Телефон: +7 812 627 14 35

Электронная почта: sales@st-electron.ru

Адрес: 198099, Санкт-Петербург, Промышленная ул, дом № 19, литера Н, помещение 100-Н Офис 331