LASER DIODE DRIVER WITH INPUT D FLIP-FLOP

SY100EL1001

FEATURES

- **Up to 1.25Gb/s operation**
- **75mA peak drive current**
- **Separate modulation control**
- **Separate master reset for laser safety**
- **Differential inputs for data and clock**
- **75KΩ input pulldown resistor**
- **Single power supply**
- **Available in 16-pin SOIC package**

DESCRIPTION

The SY100EL1001 is a high speed current source for driving a semiconductor laser diode in optical transmission applications. The output current modulation is DC – voltage controlled. The integrated circuit contains the following functional blocks:

- Input Line Receiver
- D Flip-Flop
- Bias Control Circuitry
- Output Current Switch

A logic HIGH level at the data input results in the modulation current flowing through the OUT pin on the next rising edge of the clock. A logic HIGH level at the master reset input will disable the modulation current.

The device incorporates complementary open collector outputs with a capability of driving peak current of 75 mA.

The laser driver current is adjustable by selection of R_{SET}. The resistor R_{EXT} must be placed between /OUT and V_{CC} to dissipate the worst case power. R_{SER} is recommended to fix laser diode matching issues.

The SY100EL1001 utilizes the high performance bipolar ASSET™ technology.

BLOCK DIAGRAM

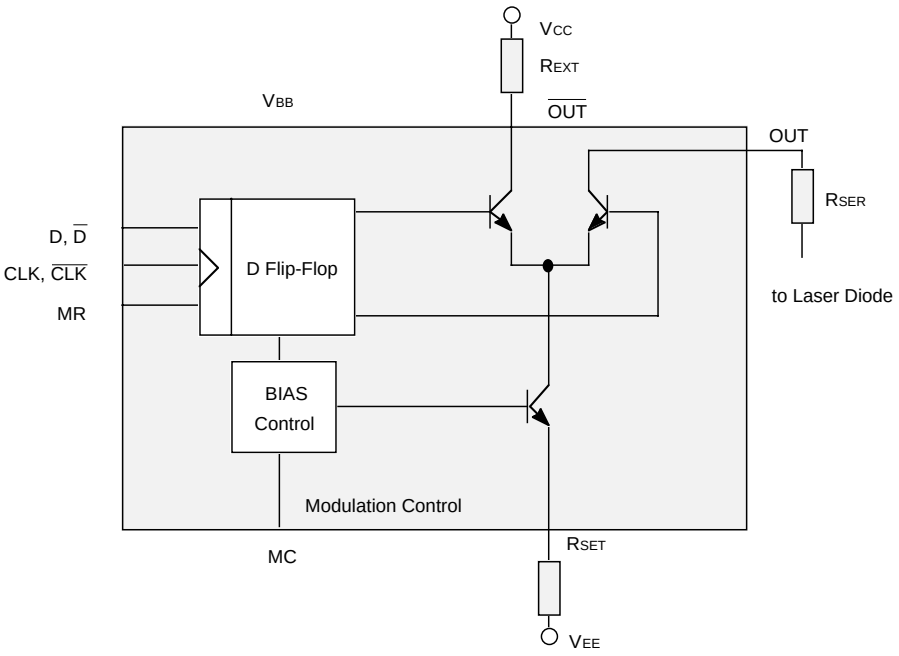

ASSET is a trademark of Micrel, Inc.

PACKAGE/ORDERING INFORMATION

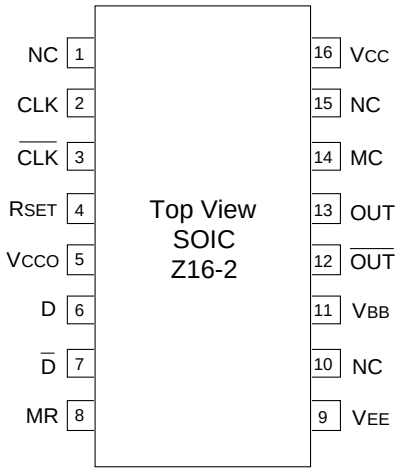

16-Pin Narrow SOIC (Z16-2)

Ordering Information[1]

Part Number	Package Type	Operating Range	Package Marking	Lead Finish
SY100EL1001ZC	Z16-2	Commercial	SY100EL1001ZC	Sn-Pb
SY100EL1001ZCTR[2]	Z16-2	Commercial	SY100EL1001ZC	Sn-Pb
SY100EL1001ZI	Z16-2	Industrial	SY100EL1001ZI	Sn-Pb
SY100EL1001ZITR[2]	Z16-2	Industrial	SY100EL1001ZI	Sn-Pb
SY100EL1001ZG[3]	Z16-2	Industrial	SY100EL1001ZG with Pb-Free bar-line indicator	Pb-Free NiPdAu
SY100EL1001ZGTR[2, 3]	Z16-2	Industrial	SY100EL1001ZG with Pb-Free bar-line indicator	Pb-Free NiPdAu

Notes:

1. Contact factory for die availability. Dice are guaranteed at T_A = 25°C, DC Electricals only.
2. Tape and Reel.
3. Pb-Free package is recommended for new designs.

PIN NAMES

Pin	Function
V_{CC}, V_{CCO}	Most positive power supply pins separation helps to isolate sensitive circuitry from noise generating function. +5V for PECL operation or ground for ECL operation.
V_{EE}	Most negative power supply input. Ground for PECL operation or -5V for ECL operation.
V_{BB}	This pin provides a reference voltage for use in single ended applications or when the input signal is AC coupled into the device.
D,/D	These differential ECL/PECL 100K compatible inputs receive NRZ data.
CLK, /CLK	These differential clock inputs
MR	This ECL/PECL 100K compatible input resets the Laser Driver Logic - modulation current transitions to zero when asserted high.
OUT, /OUT	Open collector outputs from the modulation buffer drive these differential current outputs.
MC	An external voltage sets the main value of modulation current I_O.
R_{SET}	An external resistor sets the source current for modulation Imod.
NC	These pins are not connected.

TRUTH TABLE[1]

D	/D	CLK	/CLK	MR	OUT	/OUT
L	H	Z	ZZ	L	H	L
H	L	Z	ZZ	L	L	H
X	X	X	X	H	H	L

Note:

1. L = LOW, H = HIGH, Z = LOW-to-HIGH transition, ZZ = HIGH-to-LOW transition, X = don't care.

ABSOLUTE MAXIMUM RATINGS[1]

Symbol	Rating	Value	Unit
V_{CC}	Power Supply Voltage (V_{CC} = 0V)	0 to –7.0	V
V_{IN}	Input Voltage (V_{CC} = 0V)	0 to –6.0	V
I_{OUT}	Output Current	75	mA
T_{LEAD}	Lead Temperatre (soldering, 20sec.)	+260	°C
T_A	Operating Temperature Range	–40 to +85	°C
P_D	Power Dissipation	500	mW

Note:

1. Permanent device damage may occur if absolute maximum ratings are exceeded. This is a stress rating only and functional operation is not implied at conditions other than those detailed in the operational sections of this data sheet. Exposure to absolute maximum ratlng conditions for extended periods may affect device reliability.

OPERATIONING CONDITIONS[1]

Symbol	Rating	Value	Unit
V_{EE}	Power Supply Voltage	–4.75 to –5.25	V
R_{SET}	Resistor to Adjust Current	10 to 100	Ω
R_{EXT}	Resistor to Dissipate Power	10 to 50	Ω
R_{SER}	Laser Diode Serial Resistor	0 to 50	Ω

Note:

1. The voltage drop across R_{EXT} and R_{SER} should not be greater than 2V.

DC ELECTRICAL CHARACTERISTICS[1]

$V_{CC} = V_{CCO} = 0V$; $V_{EE} = -5.0V \pm 5\%$

Symbol	Parameter	$T_A = -40°C$			$T_A = 0°C$			$T_A = +25°C$			$T_A = +85°C$			Unit
		Min.	Typ.	Max.	Min.	Typ.	Max.	Min.	Typ.	Max.	Min.	Typ.	Max.	
V_{IH}	Input HIGH Voltage (D, CLK, MR)	–1165	—	–880	–1165	—	–880	–1165	—	–880	–1165	—	–880	mV
V_{IL}	Input LOW Voltage (D, CLK, MR)	–1810	—	–1475	–1810	—	–1475	–1810	—	–1475	–1810	—	–1475	mV
V_{Imod}	Input Voltage (Modulation Control)	V_{EE}	—	V_{CC}	V_{EE}	—	V_{CC}	V_{EE}	—	V_{CC}	V_{EE}	—	V_{CC}	V
V_{BB}	Output Reference Voltage	–1380	—	–1260	–1380	—	–1260	–1380	—	–1260	–1380	—	–1260	mV
I_{IH}	Input HIGH Current (D, CLK, MR)	—	—	150	—	—	150	—	—	150	—	—	150	µA
I_{Imod}	Input Current (Modulation Control)	—	—	150	—	—	150	—	—	150	—	—	150	µA
I_{IL}	Input LOW Current[2] (D, CLK, MR)	0.5	—	—	0.5	—	—	0.5	—	—	0.5	—	—	µA
I_{CC}	Supply Current[3]	8	14	25	8	14	25	8	14	25	8	14	25	mA
I_{OH}	Output HIGH Current[4] (MR LOW)[5]	60	64 —	68 —	60 5	64 —	68 —	60 5	64 —	68 —	60 5	64 —	68 —	mA 5
I_{OL}	Output LOW Current (MR HIGH)	—	—	500	—	—	500	—	—	500	—	—	500	µA
I_{OR}	Output Current Ringing[6]	—	—	10	—	—	10	—	—	10	—	—	10	%
I_{Omod}	Laser Diode Modulation Current Range	5	—	60	5	—	60	5	—	60	5	—	60	mA

Notes:

1. $R_{SET} = 10\Omega \pm 1\%$
2. $V_I = V_{IL}$ (Min.)
3. V_{Imod} = VCC
4. $V_{Imod} = -3.5V$
5. $V_{Lmod} = -0.8V$
6. I_{OH} = 5 to 60mA

AC ELECTRICAL CHARACTERISTICS[1]

Symbol	Parameter	$T_A = -40°C$			$T_A = 0°C$			$T_A = +25°C$			$T_A = +85°C$			Unit
		Min.	Typ.	Max.	Min.	Typ.	Max.	Min.	Typ.	Max.	Min.	Typ.	Max.	
t_{pd} CLK	Propagation Delay CLK - OUT	—	—	1000	—	—	1000	—	—	1000	—	—	1000	ps
t_{pd} MR	Propogation Delay MR - OUT	—	—	1000	—	—	1000	—	—	1000	—	—	1000	ps
t_r t_f	Rise/Fall Time (20% to 80%)	—	—	400	—	—	400	—	—	400	—	—	400	ps
t_S	Set-up Time	100	—	—	100	—	—	100	—	—	100	—	—	ps
t_H	Hold Time	200	—	—	200	—	—	200	—	—	200	—	—	ps
t_{PW}	Minimum Pulse Width (CLK, MR)	400	—	—	400	—	—	400	—	—	400	—	—	ps

Note:

1. $R_{SET} = 10\Omega \pm 1\%$, $R_{EXT} = R_{SER} = 50\Omega \pm 1\%$

PERFORMANCE CURVES

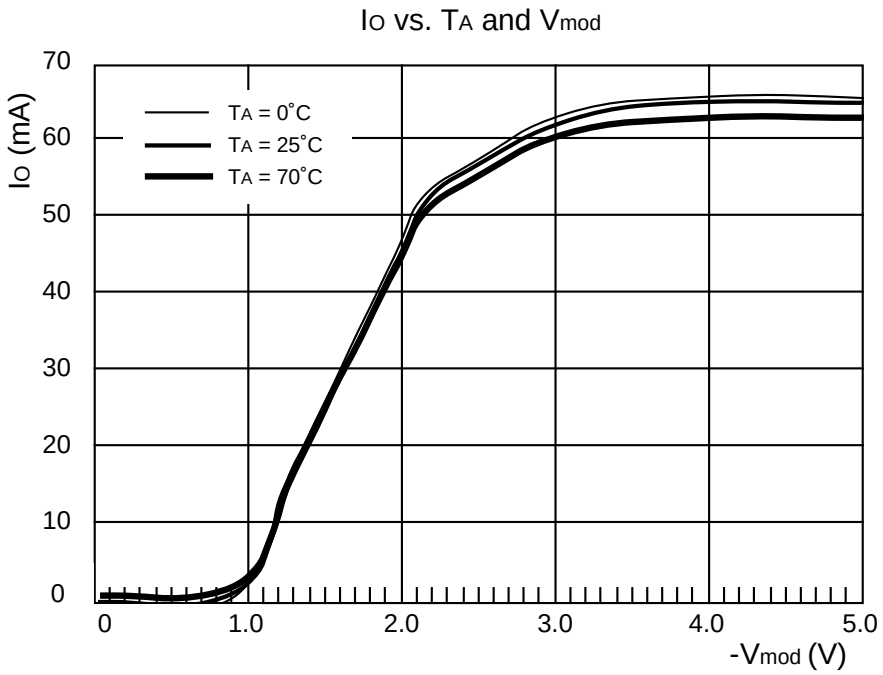

APPLICATION EXAMPLE

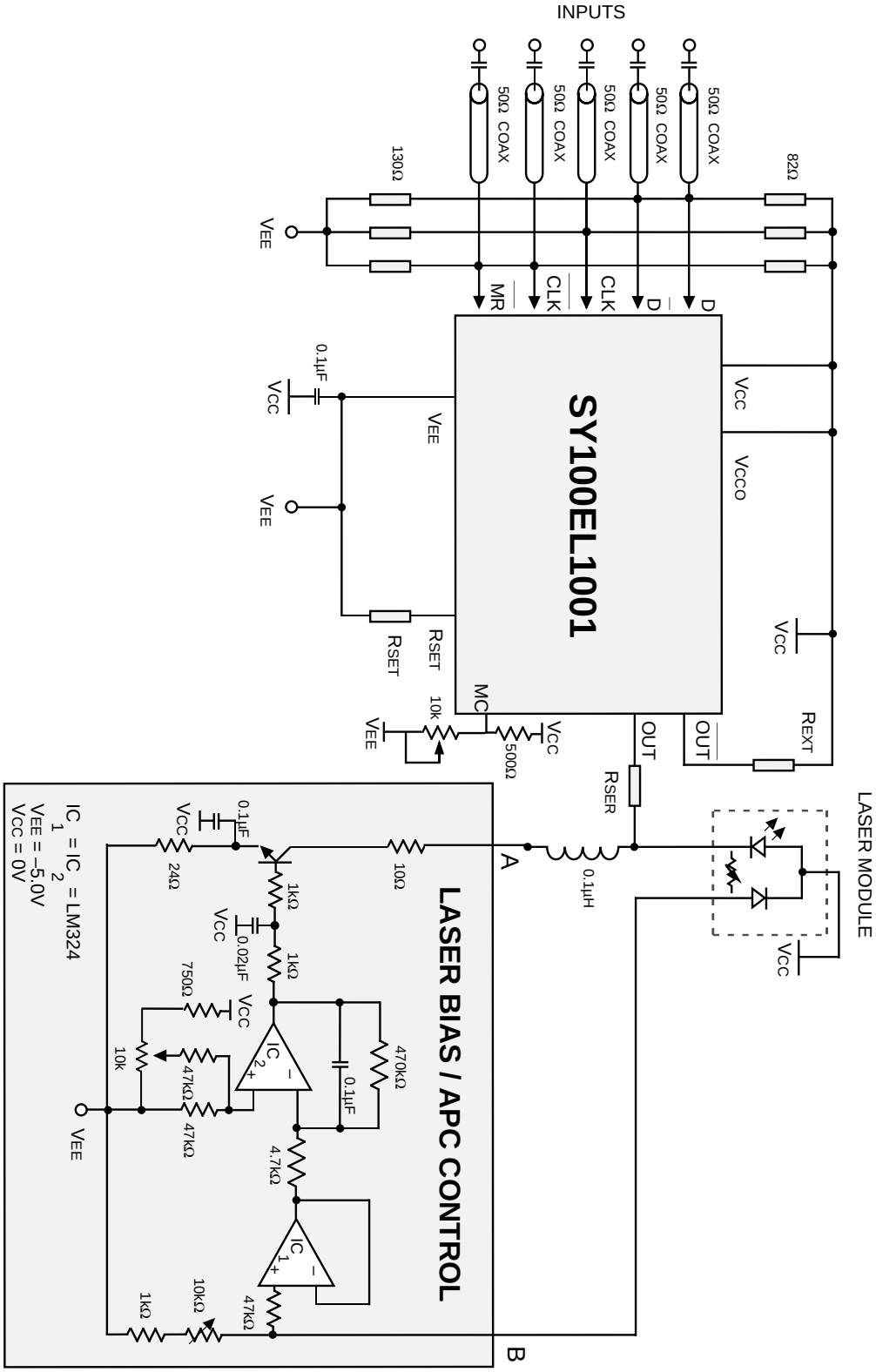

NOTES:

1. Split 100K ECL terminations are 82Ω and 130Ω to V_{CC} and V_{EE} respectively.
2. Recommended power supply bypass capacitors are 0.1µF with optional 10µF Tantalum in parallel.
3. High frequency design techniques are required for board layout. A double sided or multilayer board is recommended in conjunction with a low impedance ground plane and properly terminated transmission lines for all signal paths.
4. V_{BB} voltage pin may be used as reference for single ended input applications.

16-PIN SOIC .150" WIDE (Z16-2)

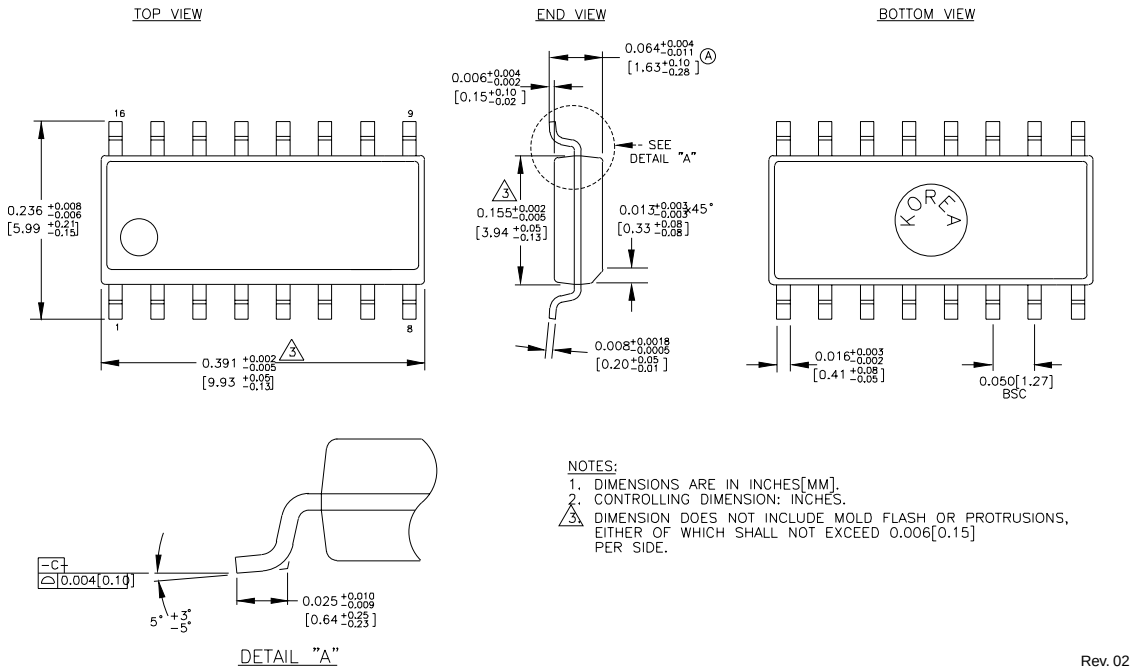

MICREL, INC. 2180 FORTUNE DRIVE SAN JOSE, CA 95131 USA

TEL + 1 (408) 944-0800 FAX + 1 (408) 474-1000 WEB http://www.micrel.com

The information furnished by Micrel in this datasheet is believed to be accurate and reliable. However, no responsibility is assumed by Micrel for its use. Micrel reserves the right to change circuitry and specifications at any time without notification to the customer.

Micrel Products are not designed or authorized for use as components in life support appliances, devices or systems where malfunction of a product can reasonably be expected to result in personal injury. Life support devices or systems are devices or systems that (a) are intended for surgical implant into the body or (b) support or sustain life, and whose failure to perform can be reasonably expected to result in a significant injury to the user. A Purchaser's use or sale of Micrel Products for use in life support appliances, devices or systems is at Purchaser's own risk and Purchaser agrees to fully indemnify Micrel for any damages resulting from such use or sale.

© 2006 Micrel, Incorporated.

Мы молодая и активно развивающаяся компания в области поставок электронных компонентов. Мы поставляем электронные компоненты отечественного и импортного производства напрямую от производителей и с крупнейших складов мира.

Благодаря сотрудничеству с мировыми поставщиками мы осуществляем комплексные и плановые поставки широчайшего спектра электронных компонентов.

Собственная эффективная логистика и склад в обеспечивает надежную поставку продукции в точно указанные сроки по всей России.

Мы осуществляем техническую поддержку нашим клиентам и предпродажную проверку качества продукции. На все поставляемые продукты мы предоставляем гарантию .

Осуществляем поставки продукции под контролем ВП МО РФ на предприятия военно-промышленного комплекса России , а также работаем в рамках 275 ФЗ с открытием отдельных счетов в уполномоченном банке. Система менеджмента качества компании соответствует требованиям ГОСТ ISO 9001.

Минимальные сроки поставки, гибкие цены, неограниченный ассортимент и индивидуальный подход к клиентам являются основой для выстраивания долгосрочного и эффективного сотрудничества с предприятиями радиоэлектронной промышленности, предприятиями ВПК и научно-исследовательскими институтами России.

С нами вы становитесь еще успешнее!

Наши контакты:

Телефон: +7 812 627 14 35

Электронная почта: sales@st-electron.ru

Адрес: 198099, Санкт-Петербург, Промышленная ул, дом № 19, литера Н, помещение 100-Н Офис 331