THIS DESIGN IS BASED ON DESIGN OBJECTIVES AND IS STRICTLY TENTATIVE. IT MAY CHANGE BASED ON RESULTS OF ADDITIONAL DESIGN REVIEWS & VERIFICATIONS.

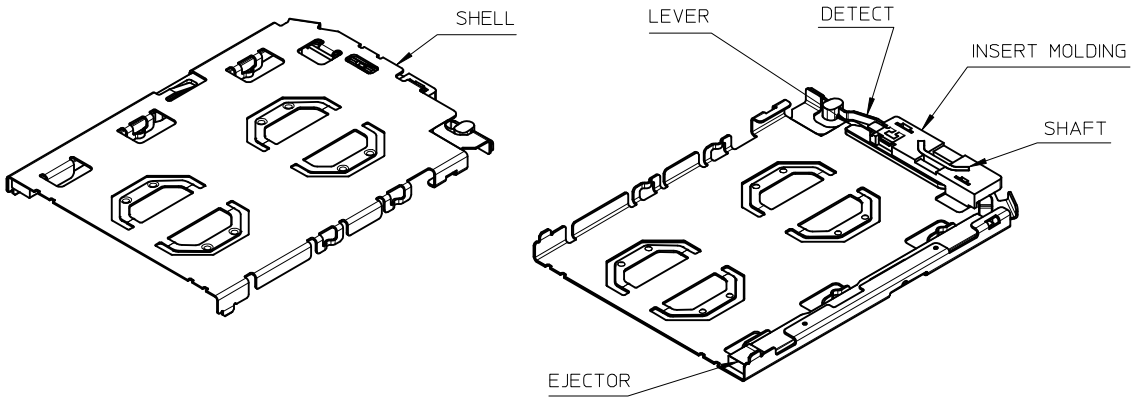

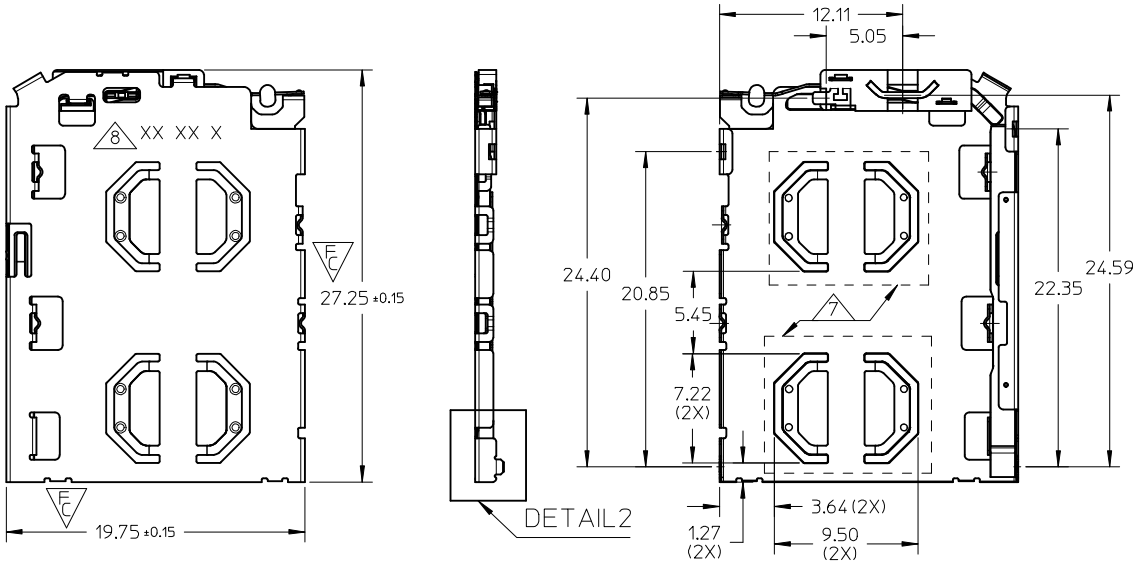

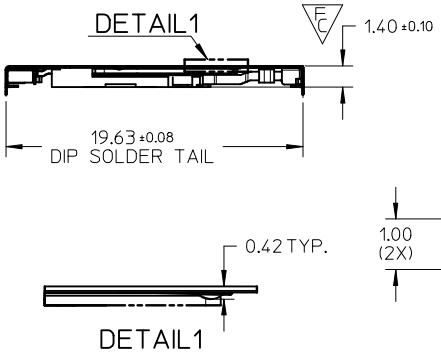

NOTES:
1. MATERIALS:
INSERT MOLD HOUSING: LCP, UL94V-0;
LEVER, SHAFT , EJECTOR , SHELL: STAINLESS STEEL;
DETECT SPRING: COPPER ALLOY;
2. FINISHES:
DETECT SPRING:
1.27um MIN. NICKEL UNDERPLATING OVERALL;
0.127um MIN. GOLD PLATING ON CONTACT AREA;
1.27 um MIN. TIN PLATING ON SOLDERING TAIL;
SHELL:
1.27um MIN NICKEL UNDERPLATING OVERALL;
0.025um MIN GOLD PLATING ON CONTACT AREA AND SOLDERING AREA;
SHAFT: 1.27um MIN TIN ON SOLDERING TAIL;
3. PRODUCT SPECIFICATION: PS-151031-001;
4. PACKAGING SPECIFICATION: PK-151031-001;PK-151032-001
5. SOLDER TAIL COPLANARITY: 0.10 MM MAX BEFORE REFLOW
6. THIS PART IS A FRAME ONLY, IT SHOULD BE USED TOGETHER WITH 0.35MM BLOCK SIM 151032 FOR AN ENTIRE SIM POP OUT SYSTEM;
7. 0.10 MINIMUM KEEP OUT ZONE FROM TOP SURFACE OF SHELL DURING INSERTION AND WITHDRAWAL OF TRAY (WITH SIM CARD)
8. DATE CODE PRINTED: XX XX X
- DAY
- WEEK
- YEAR

REV	DESCRIPTION
7	CHANGE BLOCK SIM AND TRAY EC NO: S2014-0434 2013/11/04 DRWN:JZENG 2014/01/02 CH'KD:JTAN02 2014/01/27 APPR:KHLIM

QUALITY SYMBOLS: FA=0, FC=4, FB=0

GENERAL TOLERANCES (UNLESS SPECIFIED)

	mm	INCH
4 PLACES	± ---	± ---
3 PLACES	± ---	± ---
2 PLACES	± 0.20	± ---
1 PLACE	± 0.20	± ---
0 PLACE	± ---	± ---
ANGULAR ± 3 °		

DRAFT WHERE APPLICABLE MUST REMAIN WITHIN DIMENSIONS

DIMENSION STYLE: MM ONLY	SCALE: NTS	DESIGN UNITS: METRIC	THIRD ANGLE PROJECTION
DRAWN BY: JZENG	DATE: 2013/11/04	TITLE: DUAL MICRO SIM FRAME 1.40 H	
CHECKED BY: JTAN02	DATE: 2013/12/05		
APPROVED BY: KHLIM	DATE: 2014/01/27	molex	
MATERIAL NO.: 1510310001		DOCUMENT NO.: SD-151031-0001	SHEET NO.: 1 OF 5
SIZE: A3			

THIS DRAWING CONTAINS INFORMATION THAT IS PROPRIETARY TO MOLEX INCORPORATED AND SHOULD NOT BE USED WITHOUT WRITTEN PERMISSION

SIM CONNECTOR
(WITH 151032 BLOCK SIM CONNECTOR)

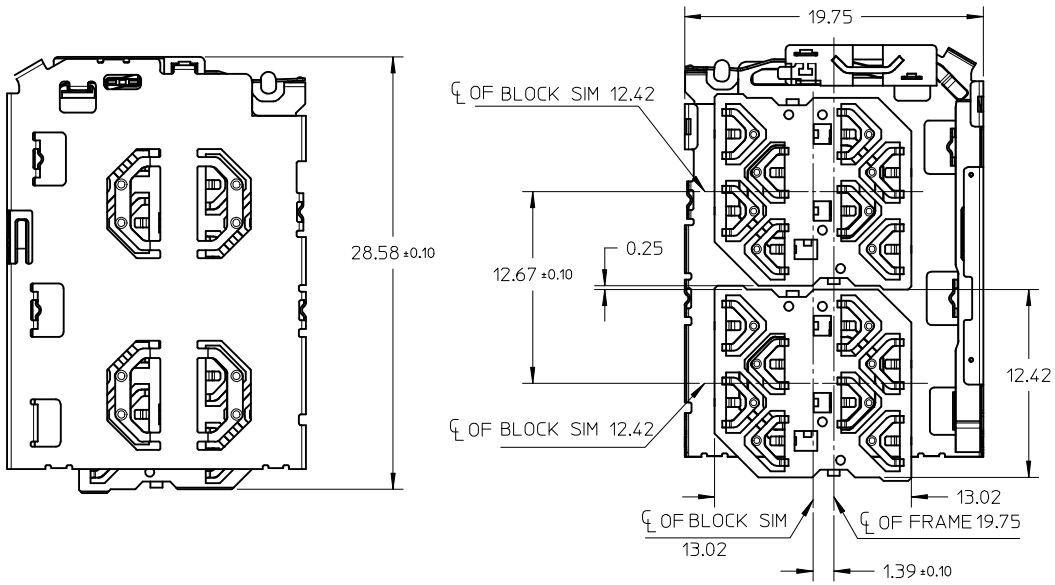

SIM CONNECTOR BOM

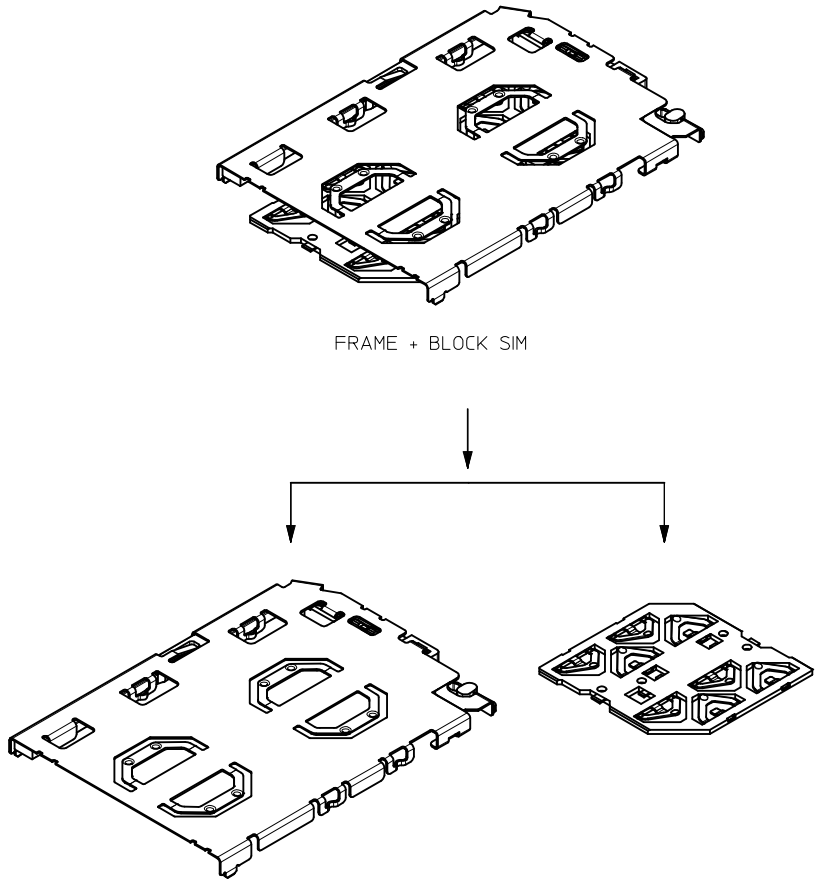

THIS DESIGN IS BASED ON DESIGN OBJECTIVES AND IS STRICTLY TENTATIVE. IT MAY CHANGE BASED ON RESULTS OF ADDITIONAL DESIGN REVIEWS & VERIFICATIONS.

SEE SHEET1	EC NO: S2014-0434	DRWN:JZENG	2013/11/04
		CH'KD:JTAN02	2014/01/02
		APPR:KHLIM	2014/01/27
7	REV	DESCRIPTION	

QUALITY SYMBOLS: F_A=0, F_C=0, F_P=0

GENERAL TOLERANCES (UNLESS SPECIFIED)

	mm	INCH
4 PLACES	± ---	± ---
3 PLACES	± ---	± ---
2 PLACES	± 0.20	± ---
1 PLACE	± 0.20	± ---
0 PLACE	± ---	± ---

ANGULAR ± 3 °

DRAFT WHERE APPLICABLE MUST REMAIN WITHIN DIMENSIONS

DIMENSION STYLE: MM ONLY	SCALE: NTS	DESIGN UNITS: METRIC	THIRD ANGLE PROJECTION
DRAWN BY: JZENG	DATE: 2013/11/04	TITLE: DUAL MICRO SIM FRAME 1.40 H	
CHECKED BY: JTAN02	DATE: 2013/12/05		
APPROVED BY: KHLIM	DATE: 2014/01/27	molex	
MATERIAL NO.: 1510310001	DOCUMENT NO.: SD-151031-0001	SHEET NO.: 2 OF 5	
SIZE: A3	THIS DRAWING CONTAINS INFORMATION THAT IS PROPRIETARY TO MOLEX INCORPORATED AND SHOULD NOT BE USED WITHOUT WRITTEN PERMISSION		

SIM CONNECTOR FRAME AND TRAY

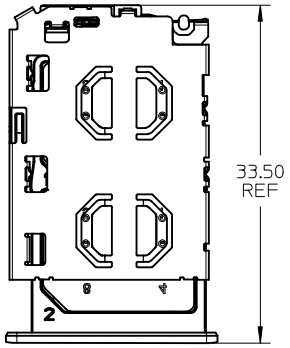

TRAY EJECTED POSITION

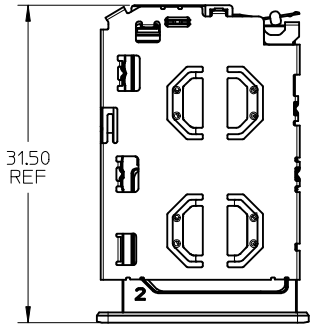

TRAY INSERTION POSITION

TRAY DETECT PIN DEFINITION	
TRAY DETECT PIN GND NORMAL SHORT (WITHOUT TRAY)	TRAY DETECT PIN AFTER TRAY INSERTED AFTER TRAY INSERTED OPEN

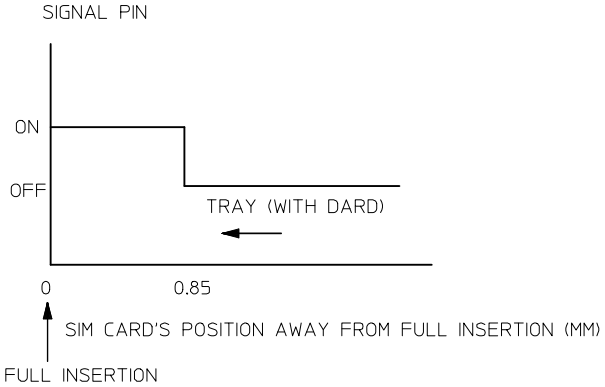

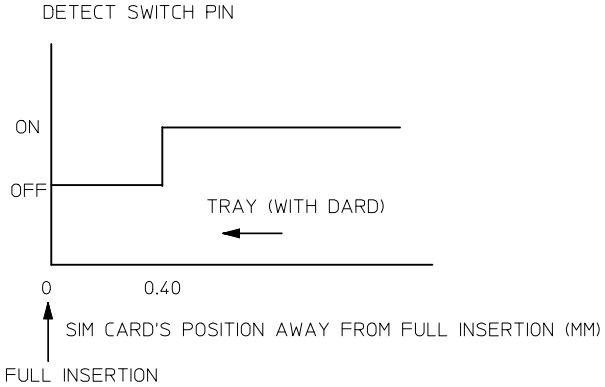

ENTER DESCRIPTION
EC NO: S2014-0434
DRWN:JZENG 2013/11/04
CH'KD:JTAN02 2014/01/02
APPR:KHLIM 2014/01/27
DESCRIPTION
REV
7

QUALITY SYMBOLS
F_A=0
F_C=0
F_P=0

GENERAL TOLERANCES (UNLESS SPECIFIED)

	mm	INCH
4 PLACES	± ---	± ---
3 PLACES	± ---	± ---
2 PLACES	± 0.20	± ---
1 PLACE	± 0.20	± ---
0 PLACE	± ---	± ---

ANGULAR ± 3 °
DRAFT WHERE APPLICABLE MUST REMAIN WITHIN DIMENSIONS

DIMENSION STYLE: MM ONLY
SCALE
DESIGN UNITS: METRIC
THIRD ANGLE PROJECTION

DRAWN BY: JZENG DATE: 2013/11/04
CHECKED BY: JTAN02 DATE: 2013/12/05
APPROVED BY: KHLIM DATE: 2014/01/27

TITLE: DUAL MICRO SIM FRAME 1.40 H

molex

MATERIAL NO.: 1510310001
DOCUMENT NO.: SD-151031-0001
SHEET NO.: 3 OF 5
SIZE: A3

THIS DRAWING CONTAINS INFORMATION THAT IS PROPRIETARY TO MOLEX INCORPORATED AND SHOULD NOT BE USED WITHOUT WRITTEN PERMISSION

tb_frame_A3_P_AM_T
Rev. G 2012/01/11

151031 FRAME SOLDERING AREA:

KEEP OUT ZONE:

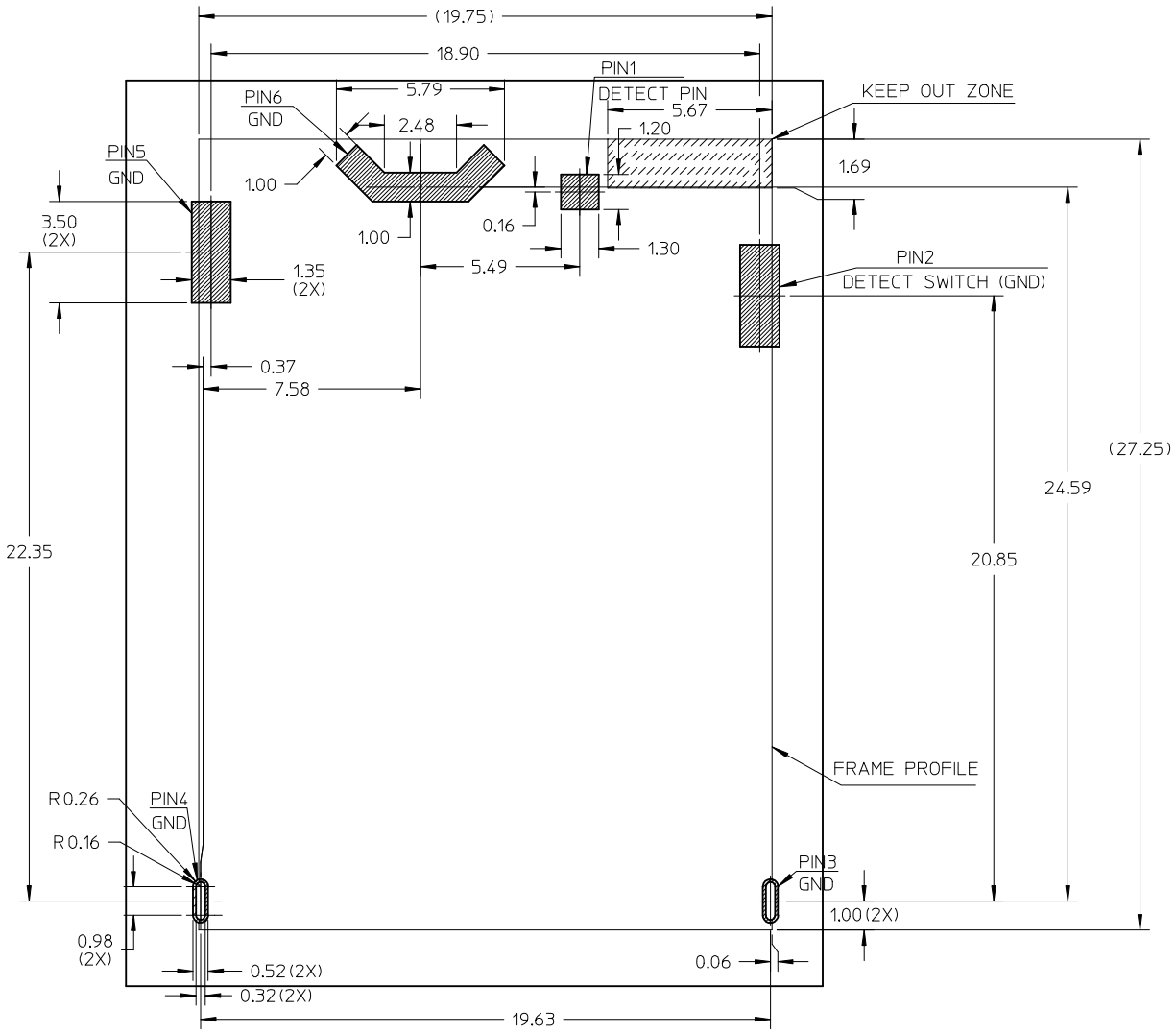

THIS DESIGN IS BASED ON DESIGN OBJECTIVES AND IS STRICTLY TENTATIVE. IT MAY CHANGE BASED ON RESULTS OF ADDITIONAL DESIGN REVIEWS & VERIFICATIONS.

RECOMMENDED PCB LAYOUT: TOLERANCE ±0.05
RECOMMENDED PCB THICKNESS: 0.80MM
RECOMMENDED STENCIL THICKNESS: 0.10MM

SEE SHEET 1
EC NO: S2014-0434
DRWN: JZENG 2013/11/04
CH'KD: JTAN02 2014/01/02
APPR: KHLIM 2014/01/27
REV 7
DESCRIPTION

QUALITY SYMBOLS
F_A=0
F_C=0
F_P=0

GENERAL TOLERANCES (UNLESS SPECIFIED)

	mm	INCH
4 PLACES	± ---	± ---
3 PLACES	± ---	± ---
2 PLACES	± 0.20	± ---
1 PLACE	± 0.20	± ---
0 PLACE	± ---	± ---

ANGULAR ± 3 °

DRAFT WHERE APPLICABLE MUST REMAIN WITHIN DIMENSIONS

DIMENSION STYLE: MM ONLY
SCALE: NTS
DESIGN UNITS: METRIC
THIRD ANGLE PROJECTION

DRAWN BY: JZENG DATE: 2013/11/04
CHECKED BY: JTAN02 DATE: 2013/12/05
APPROVED BY: KHLIM DATE: 2014/01/27

TITLE: DUAL MICRO SIM FRAME 1.40 H

molex

MATERIAL NO.: 1510310001
DOCUMENT NO.: SD-151031-0001
SHEET NO.: 4 OF 5

SIZE: A3

THIS DRAWING CONTAINS INFORMATION THAT IS PROPRIETARY TO MOLEX INCORPORATED AND SHOULD NOT BE USED WITHOUT WRITTEN PERMISSION

151031 FRAME SOLDERING AREA:
151032 BLOCK SIM SOLDERING AREA:
KEEP OUT ZONE:

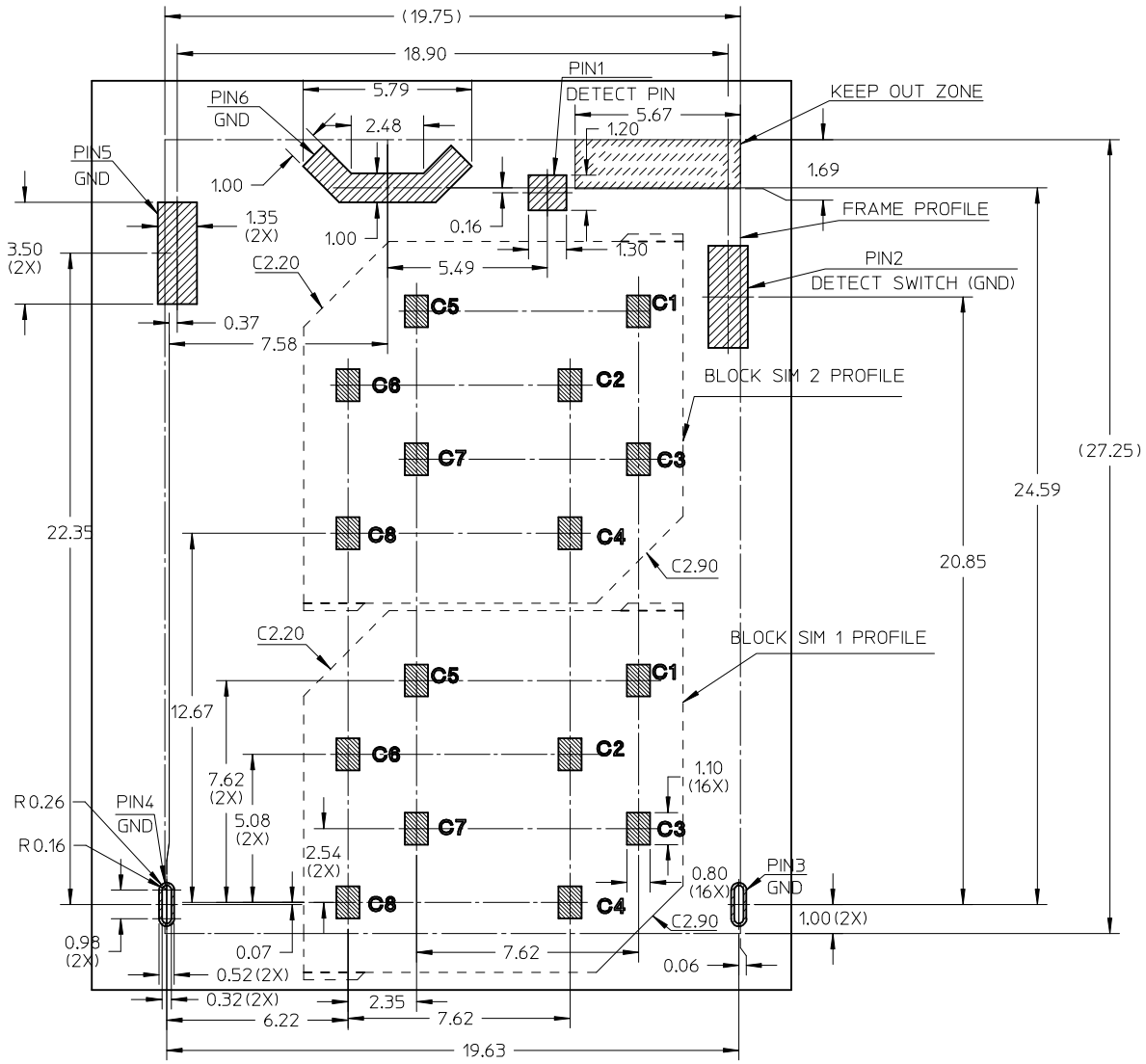

THIS DESIGN IS BASED ON DESIGN OBJECTIVES AND IS STRICTLY TENTATIVE. IT MAY CHANGE BASED ON RESULTS OF ADDITIONAL DESIGN REVIEWS & VERIFICATIONS.

RECOMMENDED PCB LAYOUT: TOLERANCE ±0.05
RECOMMENDED PCB THICKNESS: 0.80MM
RECOMMENDED STENCIL THICKNESS: 0.10MM

SEE SHEET 1
EC NO: S2014-0434
DRWN: JZENG 2013/11/04
CH'KD: JTAN02 2014/01/02
APPR: KHLIM 2014/01/27
REV 7
DESCRIPTION

QUALITY SYMBOLS
F_A=0
F_C=0
F_P=0

GENERAL TOLERANCES (UNLESS SPECIFIED)

	mm	INCH
4 PLACES	± ---	± ---
3 PLACES	± ---	± ---
2 PLACES	± 0.20	± ---
1 PLACE	± 0.20	± ---
0 PLACE	± ---	± ---

ANGULAR ± 3 °
DRAFT WHERE APPLICABLE MUST REMAIN WITHIN DIMENSIONS

DIMENSION STYLE: MM ONLY
SCALE: NTS
DESIGN UNITS: METRIC
THIRD ANGLE PROJECTION

DRAWN BY: JZENG DATE: 2013/11/04
CHECKED BY: JTAN02 DATE: 2013/12/05
APPROVED BY: KHLIM DATE: 2014/01/27

TITLE: DUAL MICRO SIM FRAME 1.40 H

molex

MATERIAL NO.: 1510310001
DOCUMENT NO.: SD-151031-0001
SHEET NO.: 5 OF 5
SIZE: A3

THIS DRAWING CONTAINS INFORMATION THAT IS PROPRIETARY TO MOLEX INCORPORATED AND SHOULD NOT BE USED WITHOUT WRITTEN PERMISSION

tb_frame_A3_P_AM_T
Rev. G 2012/01/11

THIS DESIGN IS BASED ON DESIGN OBJECTIVES AND IS STRICTLY TENTATIVE. IT MAY CHANGE BASED ON RESULTS OF ADDITIONAL DESIGN REVIEWS & VERIFICATIONS.

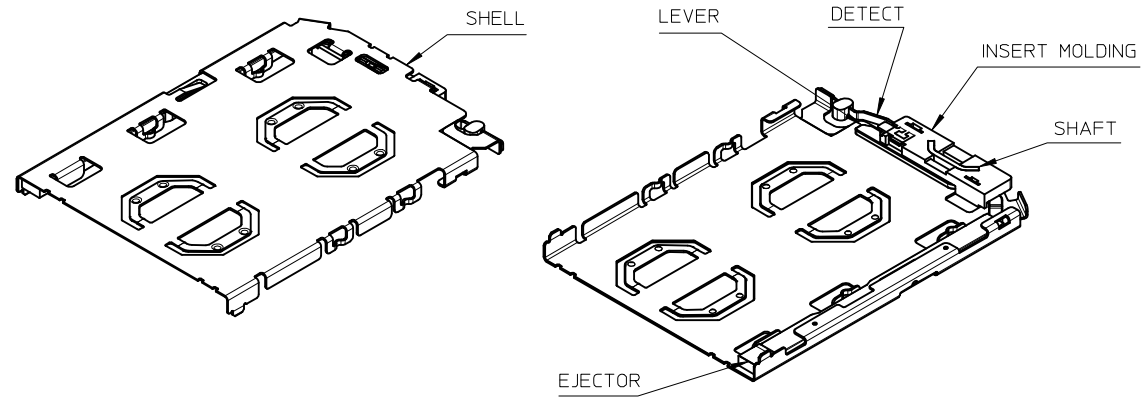

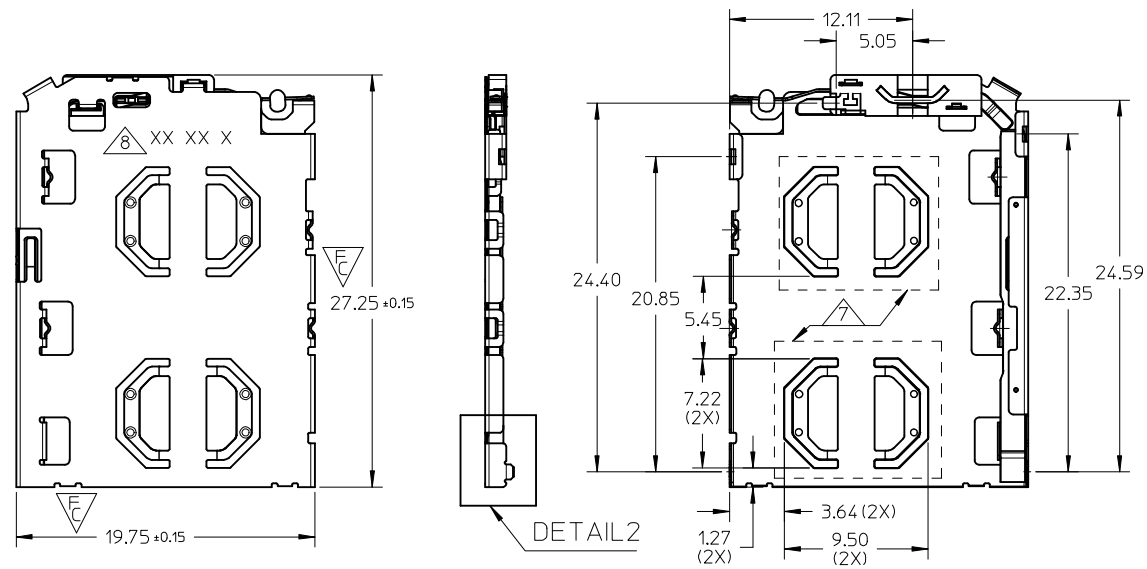

NOTES:
1. MATERIALS:
INSERT MOLD HOUSING: LCP, UL94V-0;
LEVER, SHAFT , EJECTOR , SHELL: STAINLESS STEEL;
DETECT SPRING: COPPER ALLOY;
2. FINISHES:
DETECT SPRING:
1.27um MIN. NICKEL UNDERPLATING OVERALL;
0.127um MIN. GOLD PLATING ON CONTACT AREA;
1.27 um MIN. TIN PLATING ON SOLDERING TAIL;
SHELL:
1.27um MIN NICKEL UNDERPLATING OVERALL;
0.025um MIN GOLD PLATING ON CONTACT AREA AND SOLDERING AREA;
SHAFT: 1.27um MIN TIN ON SOLDERING TAIL;
3. PRODUCT SPECIFICATION: PS-151031-001;
4. PACKAGING SPECIFICATION: PK-151031-001;PK-151032-001
5. SOLDER TAIL COPLANARITY: 0.10 MM MAX BEFORE REFLOW
6. THIS PART IS A FRAME ONLY, IT SHOULD BE USED TOGETHER WITH 0.35MM BLOCK SIM 151032 FOR AN ENTIRE SIM POP OUT SYSTEM;
7. 0.10 MINIMUM KEEP OUT ZONE FROM TOP SURFACE OF SHELL DURING INSERTION AND WITHDRAWAL OF TRAY (WITH SIM CARD)
8. DATE CODE PRINTED: XX XX X
DAY
WEEK
YEAR

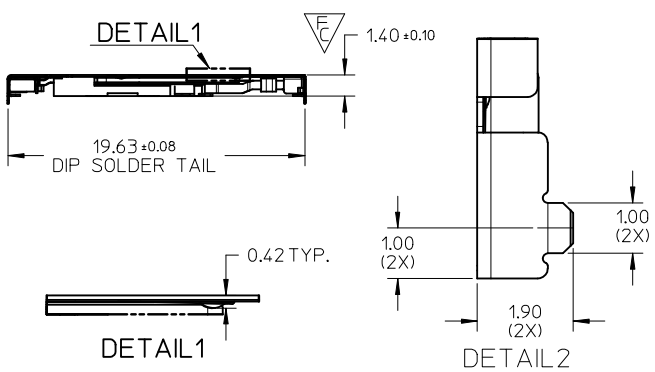

UPDATED DRAWING EC NO: S2014-0434 DRWN:JZENG 2013/12/13 CH'KD:JTAN02 2014/01/02 APPR:KHLIM 2014/01/27	QUALITY SYMBOLS FA=0 FC=4 FP=0	GENERAL TOLERANCES (UNLESS SPECIFIED)		DIMENSION STYLE MM ONLY	SCALE NTS	DESIGN UNITS METRIC	THIRD ANGLE PROJECTION
			mm / INCH	DRAWN BY JZENG DATE 2013/12/13	TITLE DUAL MICRO SIM FRAME 1.40H		
		4 PLACES	± --- / ± ---	CHECKED BY DATE			
		3 PLACES	± --- / ± ---				
		2 PLACES	± 0.20 / ± ---	APPROVED BY KHLIM DATE 2014/01/27	molex		
		1 PLACE	± 0.20 / ± ---				
		0 PLACE	± --- / ± ---				
		ANGULAR ± 3 °		MATERIAL NO. 1510310001	DOCUMENT NO. SD-151031-0002	SHEET NO. 1 OF 4	
3	REV	DRAFT WHERE APPLICABLE MUST REMAIN WITHIN DIMENSIONS		SIZE A3	THIS DRAWING CONTAINS INFORMATION THAT IS PROPRIETARY TO MOLEX INCORPORATED AND SHOULD NOT BE USED WITHOUT WRITTEN PERMISSION		

SIM CONNECTOR
(WITH 151032 BLOCK SIM CONNECTOR)

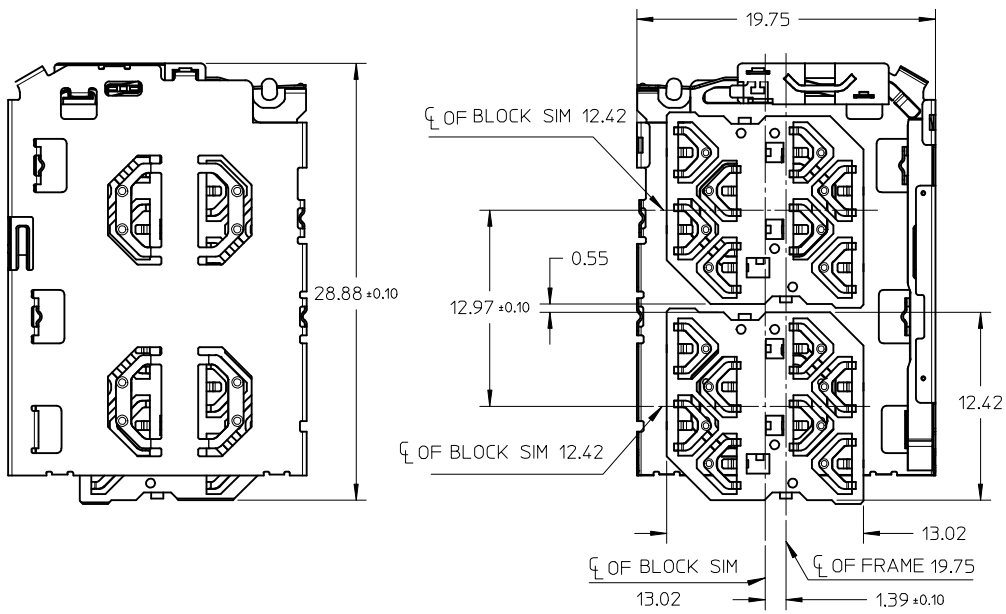

SIM CONNECTOR BOM

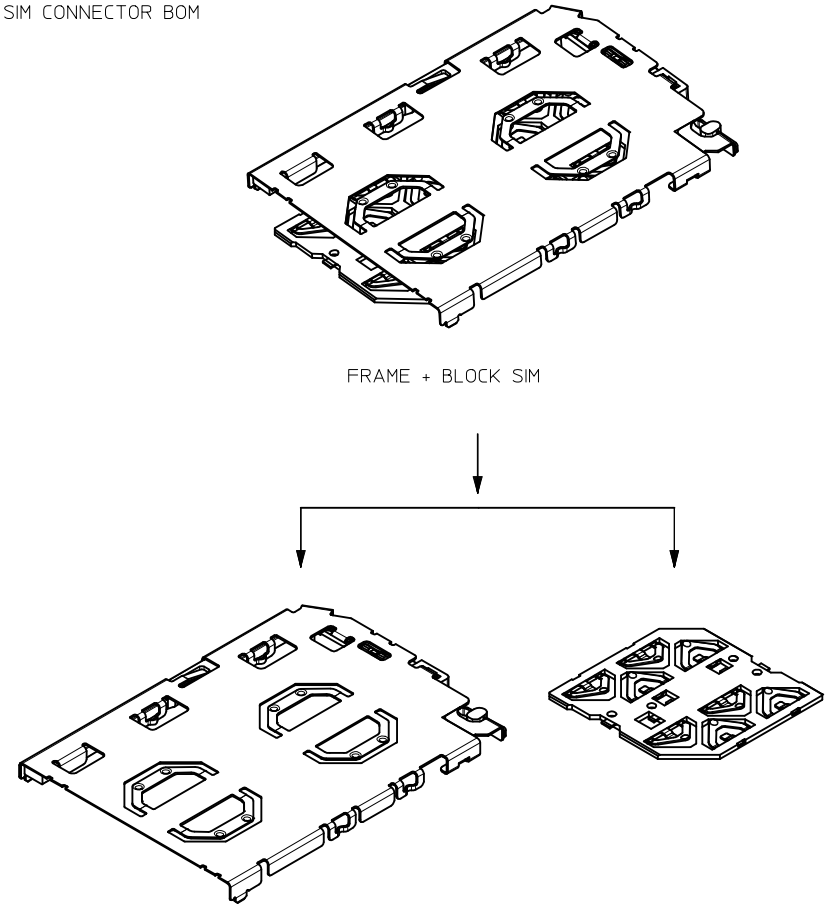

THIS DESIGN IS BASED ON DESIGN OBJECTIVES AND IS STRICTLY TENTATIVE. IT MAY CHANGE BASED ON RESULTS OF ADDITIONAL DESIGN REVIEWS & VERIFICATIONS.

SEE SHEET1 EC NO: S2014-0434 DRWN:JZENG 2013/12/13 CH'KD:JTAN02 2014/01/02 APPR:KHLIM 2014/01/27 REV 3	DESCRIPTION	QUALITY SYMBOLS F_A=0 F_C=0 F_P=0	GENERAL TOLERANCES (UNLESS SPECIFIED) mm / INCH 4 PLACES ± --- ± --- 3 PLACES ± --- ± --- 2 PLACES ± 0.20 ± --- 1 PLACE ± 0.20 ± --- 0 PLACE ± --- ± --- ANGULAR ± 3 ° DRAFT WHERE APPLICABLE MUST REMAIN WITHIN DIMENSIONS	DIMENSION STYLE MM ONLY DRAWN BY JZENG DATE 2013/12/13 CHECKED BY DATE APPROVED BY KHLIM DATE 2014/01/27 MATERIAL NO. 1510310001 SIZE A3	SCALE NTS DESIGN UNITS METRIC THIRD ANGLE PROJECTION TITLE DUAL MICRO SIM FRAME 1.40H molex DOCUMENT NO. SD-151031-0002 SHEET NO. 2 OF 4	

THIS DRAWING CONTAINS INFORMATION THAT IS PROPRIETARY TO MOLEX INCORPORATED AND SHOULD NOT BE USED WITHOUT WRITTEN PERMISSION

SIM CONNECTOR FRAME AND TRAY

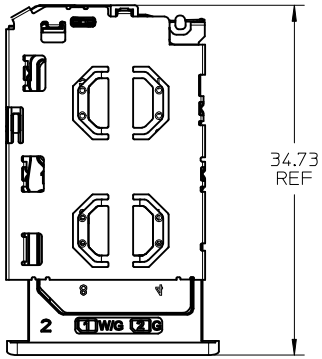

TRAY EJECTED POSITION

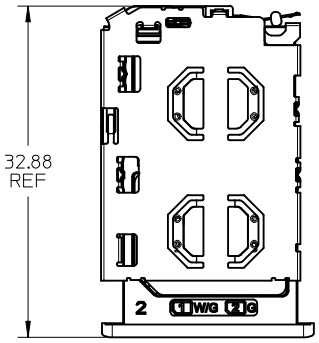

TRAY INSERTION POSITION

TRAY DETECT PIN DEFINITION	
TRAY DETECT PIN GND NORMAL SHORT (WITHOUT TRAY)	TRAY DETECT PIN AFTER TRAY INSERTED AFTER TRAY INSERTED OPEN

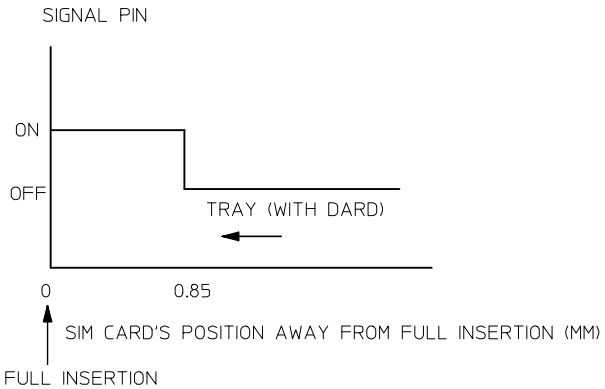

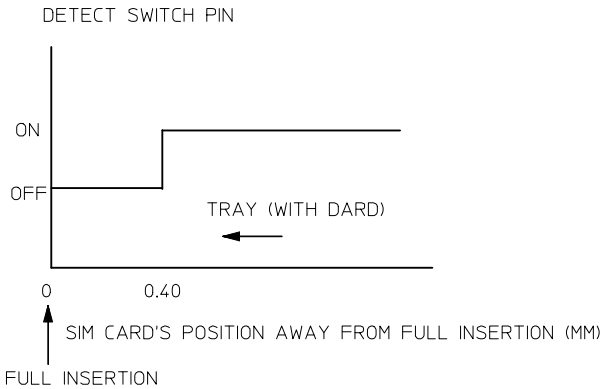

SEE SHEET 1 EC NO: S2014-0434 DRWN:JZENG 2013/12/13 CH'KD:JTANG2 2014/01/02 APPR:KHLIM 2014/01/27 3	DESCRIPTION REV	QUALITY SYMBOLS F A =0 F C =0 F P =0	GENERAL TOLERANCES (UNLESS SPECIFIED) mm / INCH 4 PLACES ± --- / ± --- 3 PLACES ± --- / ± --- 2 PLACES ± 0.20 / ± --- 1 PLACE ± 0.20 / ± --- 0 PLACE ± --- / ± --- ANGULAR ± 3 ° DRAFT WHERE APPLICABLE MUST REMAIN WITHIN DIMENSIONS	DIMENSION STYLE MM ONLY DRAWN BY JZENG DATE 2013/12/13 CHECKED BY DATE APPROVED BY KHLIM DATE 2014/01/27 MATERIAL NO. 1510310001 SIZE A3	SCALE DESIGN UNITS METRIC THIRD ANGLE PROJECTION TITLE DUAL MICRO SIM FRAME 1.40H molex DOCUMENT NO. SD-151031-0002 SHEET NO. 3 OF 4	

THIS DRAWING CONTAINS INFORMATION THAT IS PROPRIETARY TO MOLEX INCORPORATED AND SHOULD NOT BE USED WITHOUT WRITTEN PERMISSION

151031 FRAME SOLDERING AREA:
151032 BLOCK SIM SOLDERING AREA:
KEEP OUT ZONE:

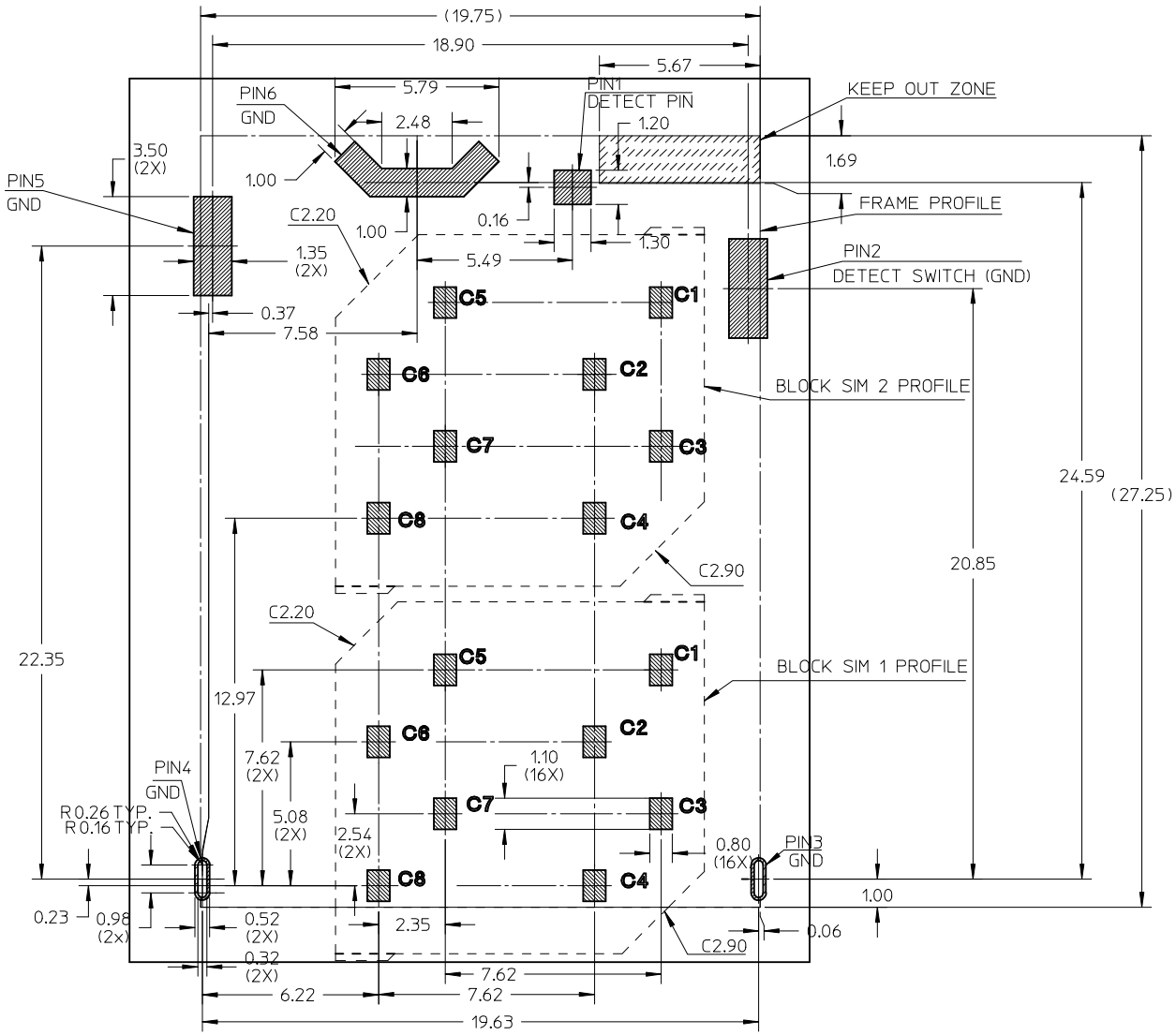

THIS DESIGN IS BASED ON DESIGN OBJECTIVES AND IS STRICTLY TENTATIVE. IT MAY CHANGE BASED ON RESULTS OF ADDITIONAL DESIGN REVIEWS & VERIFICATIONS.

RECOMMENDED PCB LAYOUT: TOLERANCE ±0.05
RECOMMENDED PCB THICKNESS: 0.80MM
RECOMMENDED STENCIL THICKNESS: 0.10MM

SEE SHEET 1		QUALITY SYMBOLS	GENERAL TOLERANCES (UNLESS SPECIFIED)	DIMENSION STYLE MM ONLY	SCALE NTS	DESIGN UNITS METRIC	THIRD ANGLE PROJECTION
EC NO: S2014-0434	2013/12/13		mm / INCH	DRAWN BY JZENG	DATE 2013/12/13	TITLE DUAL MICRO SIM FRAME 1.40H	
DRWN:JZENG	2014/01/02	F_A=0	4 PLACES ± --- / ± ---	CHECKED BY	DATE		
CH'KD:JTANG2	2014/01/02	F_C=0	3 PLACES ± --- / ± ---				
APPR:KHLIM	2014/01/27	F_B=0	2 PLACES ± 0.20 / ± ---	APPROVED BY KHLIM	DATE 2014/01/27	molex	
DESCRIPTION			1 PLACE ± 0.20 / ± ---				
			0 PLACE ± --- / ± ---	MATERIAL NO. 1510310001	DOCUMENT NO. SD-151031-0002		SHEET NO. 4 OF 4
REV 3			ANGULAR ± 3 °				
			DRAFT WHERE APPLICABLE MUST REMAIN WITHIN DIMENSIONS	SIZE A3	THIS DRAWING CONTAINS INFORMATION THAT IS PROPRIETARY TO MOLEX INCORPORATED AND SHOULD NOT BE USED WITHOUT WRITTEN PERMISSION		

tb_frame_A3_P_AM_T
Rev. G 2012/01/11

Мы молодая и активно развивающаяся компания в области поставок электронных компонентов. Мы поставляем электронные компоненты отечественного и импортного производства напрямую от производителей и с крупнейших складов мира.

Благодаря сотрудничеству с мировыми поставщиками мы осуществляем комплексные и плановые поставки широчайшего спектра электронных компонентов.

Собственная эффективная логистика и склад в обеспечивает надежную поставку продукции в точно указанные сроки по всей России.

Мы осуществляем техническую поддержку нашим клиентам и предпродажную проверку качества продукции. На все поставляемые продукты мы предоставляем гарантию .

Осуществляем поставки продукции под контролем ВП МО РФ на предприятия военно-промышленного комплекса России , а также работаем в рамках 275 ФЗ с открытием отдельных счетов в уполномоченном банке. Система менеджмента качества компании соответствует требованиям ГОСТ ISO 9001.

Минимальные сроки поставки, гибкие цены, неограниченный ассортимент и индивидуальный подход к клиентам являются основой для выстраивания долгосрочного и эффективного сотрудничества с предприятиями радиоэлектронной промышленности, предприятиями ВПК и научно-исследовательскими институтами России.

С нами вы становитесь еще успешнее!

Наши контакты:

Телефон: +7 812 627 14 35

Электронная почта: sales@st-electron.ru

Адрес: 198099, Санкт-Петербург, Промышленная ул, дом № 19, литера Н, помещение 100-Н Офис 331