9 Mechanical Data

The following section describes the mechanical specifications of products in this *Telecom Design Guide*.

Gas Plasma Arresters—Package Dimensions / Specifications 9-3
- SL1122A Series 9-3
- SL0902A Series 9-3
- SL1002A Series 9-4
- SL1003A Series 9-4
- SL1011A and SL1011B Series 9-5
- SL1021A and SL1021B Series 9-5
- SL1024A and SL1024B Series 9-6
- SL1411A Series 9-7

SIDACtor® DO-214AA Package Symbolization 9-8

SIDACtor® Devices—Package Dimensions 9-9
- DO-214AA 9-9
- Modified DO-214AA 9-10
- TO-92 9-11
- T10A 9-12
- T10B 9-12
- T10C 9-13
- Modified MS-013 9-14
- Modified TO-220 9-15
- TO-218 9-16
- R Package—TO-220AB 9-17
- N Package—TO-263 9-18
- *SIDACtor*® Cell 9-19

TeleLink® Surface Mount Fuse—Package Dimensions 9-20

Electronic Fuses—Package Dimensions 9-21
- 2AG *Slo-Blo*® Fuse—229P / 230P Series 9-21
- *NANO*^{2}® Fuse—451 / 453 Series 9-21
- *NANO*^{2}® Fuse—452 / 454 Series 9-22
- SMF *OMNI-BLOK*® Fuse Block—154 Series 9-22
- *NANO*^{2}® 250 V UMF Fuse—464 / 465 Series 9-23
- 481 Series Alarm Indicating Fuse 9-23
- 482 Series Alarm Indicating Fuseholder 9-24

DC Power Fuses—Package Dimensions 9-25
- L17T Series 9-25
- TLN Series 9-26
- TLS Series 9-27
- LTFD Series 9-28
- LTFD 101 Series 9-30

Summary of Packing Options 9-31
Packing Options 9-36
SL1122A Series 9-36
SL0902A Series 9-36
SL1002A Series 9-37
SL1003A Series 9-37
SL1011A/B Series 9-38
SL1021A/B Series 9-38
SL1024A/B Series 9-38
SL1411A Series 9-38
DO-214AA 9-39
TO-92 9-40
T10A. 9-41
T10B. 9-42
T10C. 9-43
Modified MS-013 Six-pin 9-44
Modified TO-220. 9-45
TO-263 9-46
TeleLink® Surface Mount Fuse. 9-47
229P / 230P Series 9-50
Lead Form Options 9-51
Modified TO-220 Type 60. 9-51
Modified TO-220 Type 61. 9-52
Modified TO-220 Type 62. 9-52

Gas Plasma Arresters—Package Dimensions/Specifications

The following illustrations show package dimensions and mechanical specifications for each of the gas plasma arresters.

SL1122A Series

The SL1122A series device weighs 2.7 grams (0.095 ounces). Body material is ceramic. The electrode base is made of nickel iron alloy, and the electrode plating material is bright Sn. Each device is marked with an LF logo, voltage, and date code.

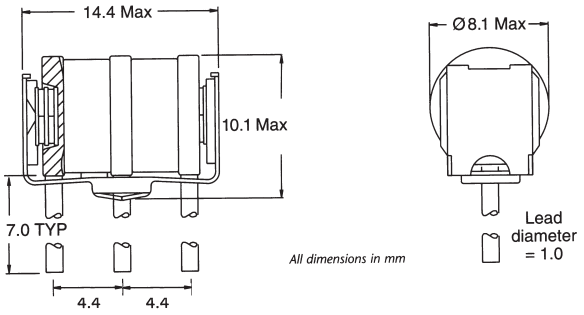

SL0902A Series

The SL0902A series device weighs 0.33 grams (0.011 ounces). Body material is ceramic. The electrode base is made of copper alloy, and the electrode plating material is bright Sn. Each device is marked with an LF logo, voltage, and date code.

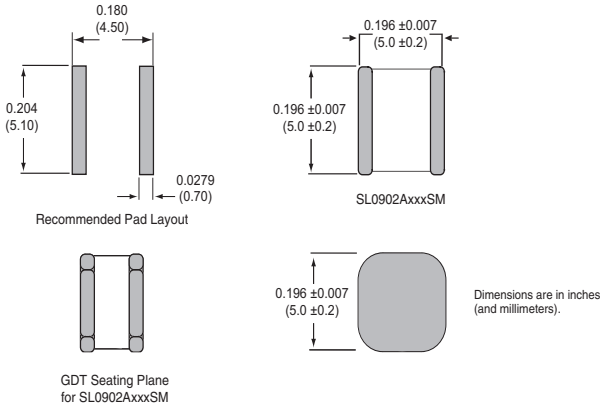

SL1002A Series

The SL1002A series device weighs 0.63 grams (0.022 ounces). Body material is ceramic. The electrode base is made of nickel iron alloy, and the electrode plating material is bright Sn. Each device is marked with an LF logo, voltage, and date code.

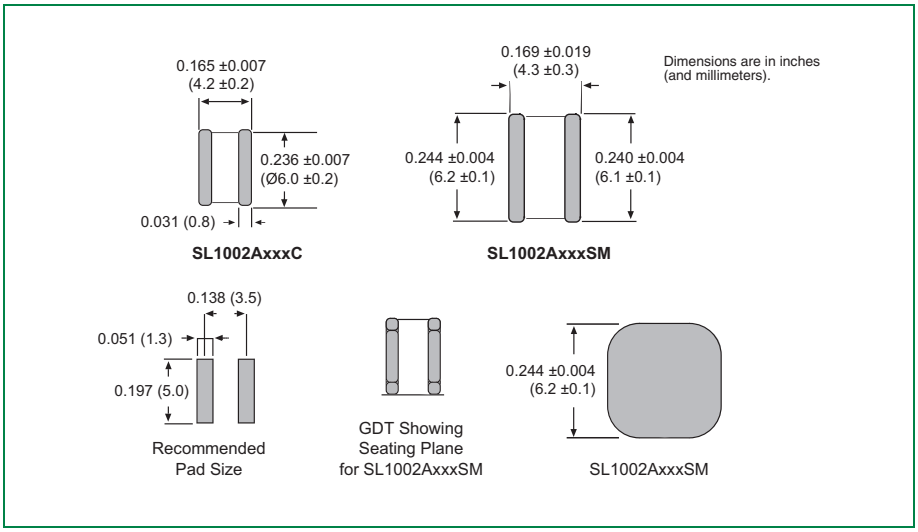

SL1003A Series

The SL1003A series device weighs 1.5 grams (0.083 ounces). Body material is ceramic. The electrode base is made of nickel iron alloy, and the electrode plating material is bright Sn. Each device is marked with an LF logo, voltage, and date code.

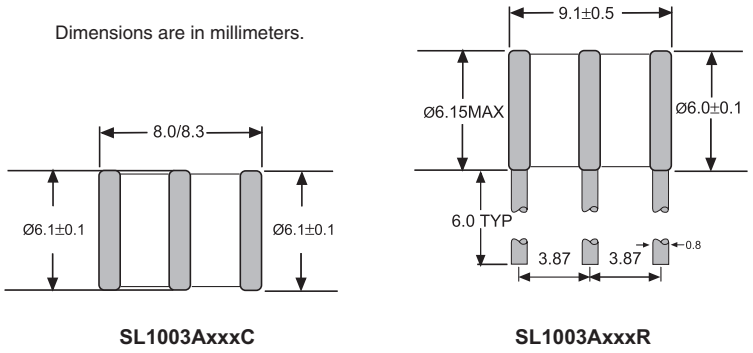

 © 2006 Littelfuse, Inc. • Telecom Design Guide

SL1011A and SL1011B Series

The SL1011A series device and the SL1011B series device weigh 2.7 grams (0.095 ounces). Body material is ceramic. The electrode base is made of nickel iron alloy, and the electrode plating material is bright Sn. Each device is marked with an LF logo, voltage, and date code.

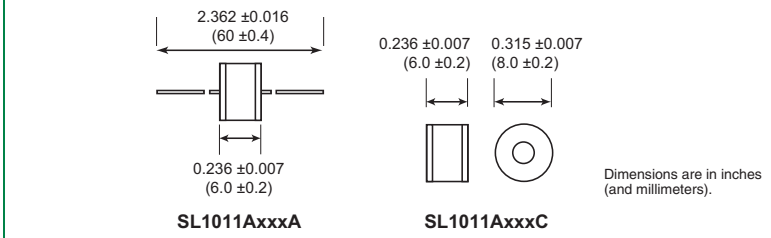

SL1021A and SL1021B Series

The SL1021A series device weighs 2.7 grams (0.095 ounces). The SL1021B series device weighs 0.63 grams (0.022 ounces). Body material is ceramic. The electrode base is made of nickel iron alloy, and the electrode plating material is bright Sn. Each device is marked with an LF logo, voltage, and date code. The SL1021B series markings are in blue.

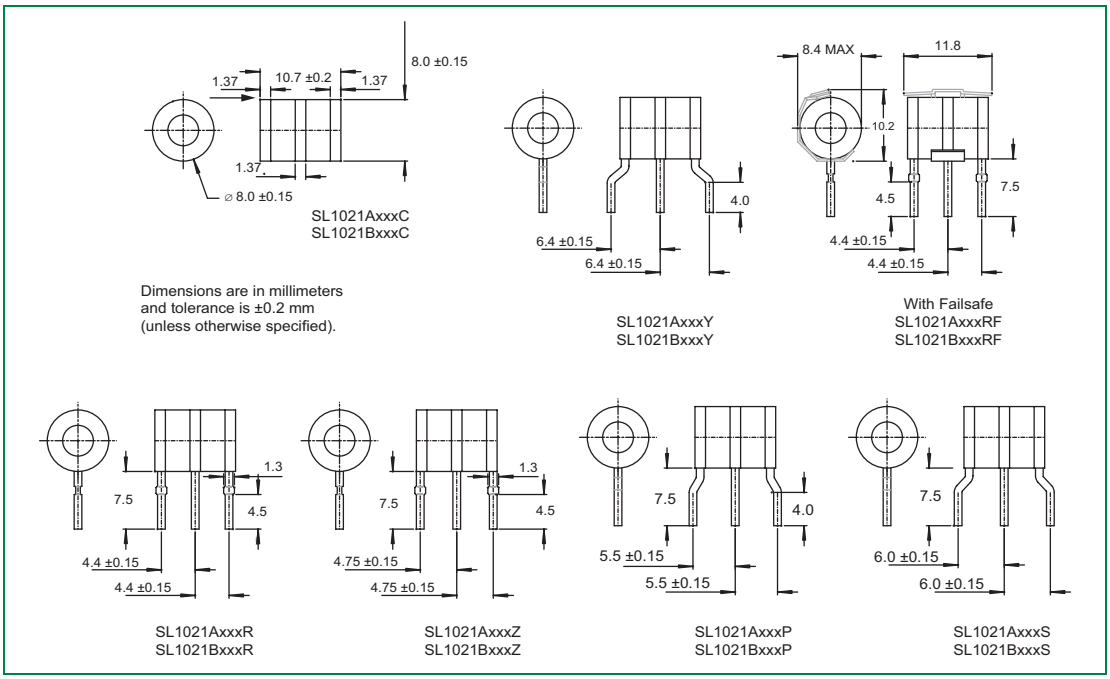

SL1024A and SL1024B Series

The SL1024A series device and the SL1024B series device weigh 2.7 grams (0.095 ounces). Body material is ceramic. The electrode base is made of nickel iron alloy, and the electrode plating material is bright Sn. Each device is marked with an LF logo, voltage, and date code in red.

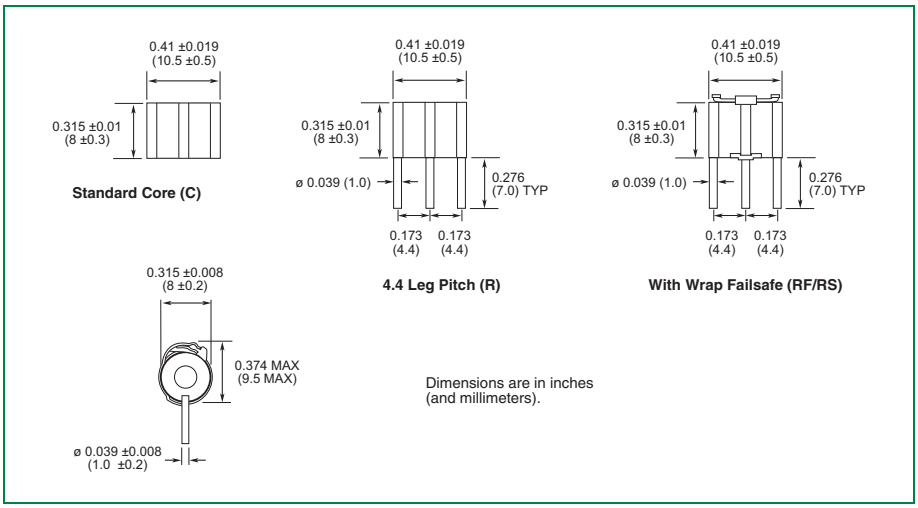

 © 2006 Littelfuse, Inc. • Telecom Design Guide

SL1411A Series

The SL1411A series device weighs 2.7 grams (0.095 ounces). Body material is ceramic. The electrode base is made of nickel iron alloy, and the electrode plating material is bright Sn. Each device is marked with an LF logo, voltage, and date code.

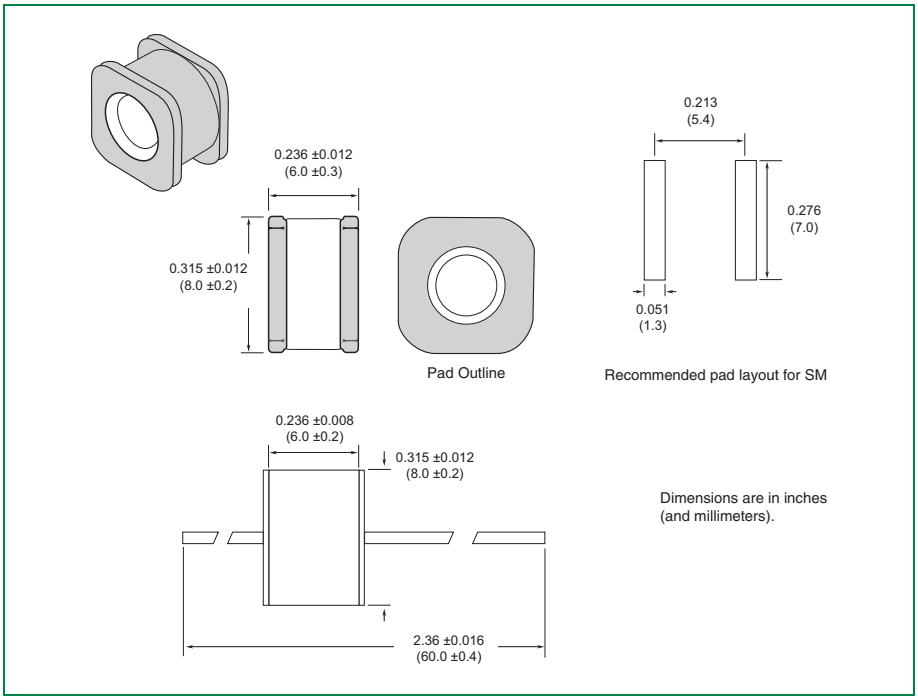

SIDACtor® DO-214AA Package Symbolization

Note: Date code is located below the symbolized part number.

Part Number	
Catalog	Symbolized
P0080SAL	P-8A
P0080SAMCL	P-8AM
P0080SBL	P-8B
P0080SCL	P-8C
P0080SDL	P-8D
P0080SCMCL	P-8CM
P0300SAL	P03A
P0300SAMCL	P03AM
P0300SBL	P03B
P0300SCL	P03C
P0300SCMCL	P03CM
P0640SAL	P06A
P0640SBL	P06B
P0640SCL	P06C
P0640SDL	P06D
P0640SCMCL	P06CM
P0641CA2L	P62A
P0641SAL	P61A
P0641SCL	P61C
P0720SAL	P07A
P0720SBL	P07B
P0720SCL	P07C
P0720SDL	P07D
P0720SCMCL	P07CM
P0721CA2L	P72A
P0721SAL	P71A
P0721SCL	P71C
P0900SAL	P09A
P0900SBL	P09B
P0900SCL	P09C
P0900SDL	P09D
P0900SCMCL	P09CM
P0901CA2L	P92A
P0901SAL	P91A
P0901SCL	P91C
P1100SAL	P11A
P1100SBL	P11B
P1100SCL	P11C
P1100SDL	P11D
P1100SCMCL	P11CM
P1101CA2L	P02A
P1101SAL	P01A

Part Number	
Catalog	Symbolized
P1101SCL	P01C
P1200SAL	P12A
P1200SBL	P12B
P1200SCL	P12C
P1200SDL	P12D
P1200SCMCL	P12CM
P1300SAL	P13A
P1300SBL	P13B
P1300SCL	P13C
P1300SDL	P13D
P1300SCMCL	P13CM
P1302SAL	P132A
P1402CAL	P14A
P1500SAL	P15A
P1500SBL	P15B
P1500SCL	P15C
P1500SDL	P15D
P1500SCMCL	P15CM
P1502SAL	P152A
P1602CAL	P16A
P1800SAL	P18A
P1800SBL	P18B
P1800SCL	P18C
P1800SDL	P18D
P1800SCMCL	P18CM
P1802SAL	P182A
P2000SAL	P20A
P2000SBL	P20B
P2000SCL	P20C
P2000SCMCL	P20CM
P2202CAL	P22A
P2300SAL	P23A
P2300SBL	P23B
P2300SCL	P23C
P2300SDL	P23D
P2300SCMCL	P23CM
P2302SAL	P232A
P2500SAL	P25A
P2500SBL	P25B
P2500SCL	P25C
P2500SDL	P25D
P2500SCMCL	P25CM

Part Number	
Catalog	Symbolized
P2600SAL	P26A
P2600SBL	P26B
P2600SCL	P26C
P2600SDL	P26D
P2600SCMCL	P26CM
P2602SAL	P262A
P2702CAL	P27A
P3002CAL	P30A
P3002CBL	P30B
P3002SAL	P30A
P3002SBL	P30B
P3100SAL	P31A
P3100SBL	P31B
P3100SCL	P31C
P3100SDL	P31D
P3100SCMCL	P31CM
P3500SAL	P35A
P3500SBL	P35B
P3500SCL	P35C
P3500SDL	P35D
P3500SCMCL	P35CM
P3502SAL	P352A
P3602CAL	P36A
P4202CAL	P42A
P4202SAL	P422A
P4802CAL	P48A
P4802SAL	P482A
P6002CAL	P60A
P6002CBL	P60B
P6002SAL	P602A
B1100CAL	B10A
B1100CCL	B10C
B1160CAL	B16A
B1160CCL	B16C
B1200CAL	B12A
B1200CCL	B12C
B2050CAL	B25A
B2050CCL	B25C

 © 2006 Littelfuse, Inc. • Telecom Design Guide

SIDACtor® Devices—Package Dimensions

DO-214AA

The DO-214AA package is designed to meet mechanical standards as set forth in JEDEC publication number 95, except for F and G dimensions.

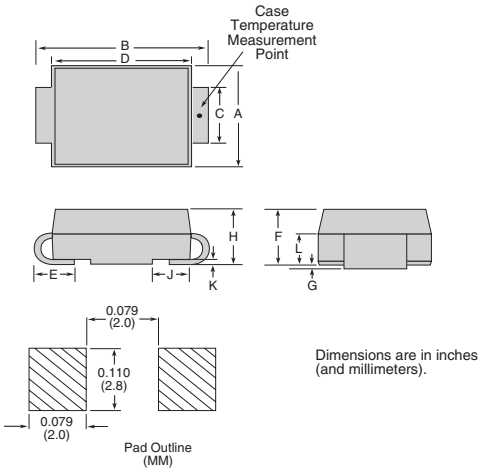

Note: A stripe is marked on some parts, to indicate the cathode. IPC-SM-782 recommends 2.4 instead of 2.0.

Dimension	Inches		Millimeters	
	MIN	MAX	MIN	MAX
A	0.140	0.155	3.56	3.94
B	0.205	0.220	5.21	5.59
C	0.077	0.083	1.96	2.11
D	0.166	0.180	4.22	4.57
E	0.036	0.063	0.91	1.60
F	0.066	0.083	1.67	2.11
G	0.004	0.008	0.10	0.20
H	0.077	0.086	1.95	2.18
J	0.043	0.053	1.09	1.35
K	0.008	0.012	0.20	0.30
L	0.027	0.049	0.69	1.24

Notes:
- Dimensions and tolerances per ASME Y14.5M-1994
- Mold flash shall not exceed 0.13 mm per side.
- Dimensions B and C apply to plated leads.
- All leads are insulated from case. Case is electrically non-conductive. (Rated at 1600 V ac rms for one minute from leads to case over the operating temperature range)
- Dimension C is measured on the flat section of the lead.

Modified DO-214AA

The Modified DO-214AA package is a three-leaded surface mount (SM) package.

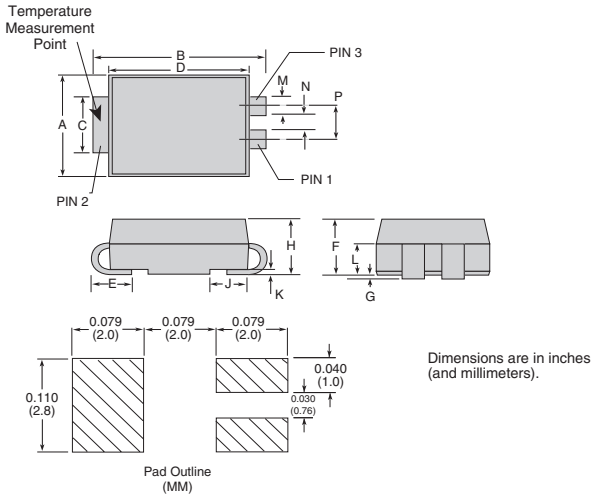

Note: A stripe is marked on some parts, to indicate the cathode. IPC-SM-782 recommends 2.4 instead of 2.0.

Dimension	Inches		Millimeters	
	MIN	MAX	MIN	MAX
A	0.140	0.155	3.56	3.94
B	0.205	0.220	5.21	5.59
C	0.077	0.083	1.96	2.11
D	0.166	0.180	4.22	4.57
E	0.036	0.063	0.91	1.60
F	0.066	0.083	1.67	2.11
G	0.004	0.008	0.10	0.20
H	0.077	0.086	1.95	2.18
J	0.043	0.053	1.09	1.35
K	0.008	0.012	0.20	0.30
L	0.027	0.049	0.69	1.24
M	0.022	0.028	0.56	0.71
N	0.027	0.033	0.69	0.84
P	0.052	0.058	1.32	1.47

Notes:
- Dimensions and tolerancing per ASME Y14.5M-1994
- Mold flash shall not exceed 0.13 mm per side.
- Dimensions B and C apply to plated leads.
- All leads are insulated from case. Case is electrically non-conductive. (Rated at 1600 V ac rms for one minute from leads to case over the operating temperature range)

 © 2006 Littelfuse, Inc. • Telecom Design Guide

TO-92

The TO-92 is designed to meet mechanical standards as set forth in JEDEC publication number 95.

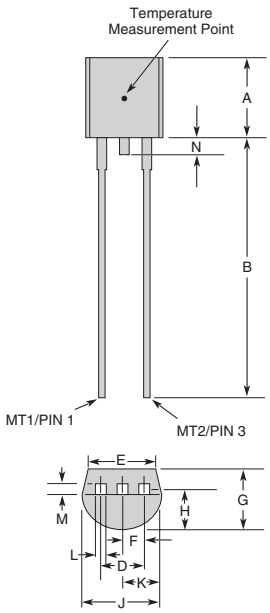

Dimension	Inches		Millimeters	
	MIN	MAX	MIN	MAX
A	0.176	0.196	4.47	4.98
B	0.500		12.70	
D	0.095	0.105	2.41	2.67
E	0.150		3.81	
F	0.046	0.054	1.16	1.37
G	0.135	0.145	3.43	3.68
H	0.088	0.096	2.23	2.44
J	0.176	0.186	4.47	4.73
K	0.088	0.096	2.23	2.44
L	0.013	0.019	0.33	0.48
M	0.013	0.017	0.33	0.43
N		0.060		1.52

Notes:
- Type 70 lead form as shown is standard for the E package.
- All leads are insulated from case. Case is electrically non-conductive. (Rated at 1600 V ac rms for one minute from leads to case over the operating temperature range)
- Mold flash shall not exceed 0.13 mm per side.

T10A

The T10A device is designed to meet mechanical standards as set forth in JEDEC publication number 95.

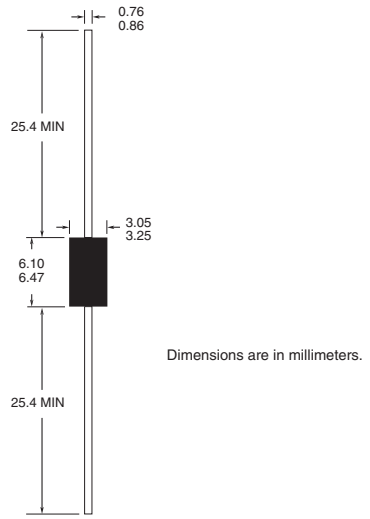

Dimensions are in millimeters.

T10B

The T10B device is designed to meet mechanical standards as set forth in JEDEC publication number 95.

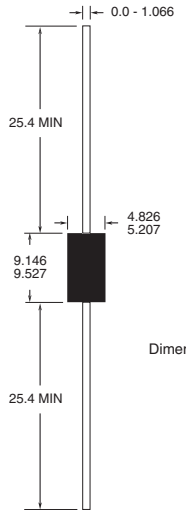

Dimensions are in millimeters.

 © 2006 Littelfuse, Inc. • Telecom Design Guide

T10C

The T10C device design is not referenced to any JEDEC standard.

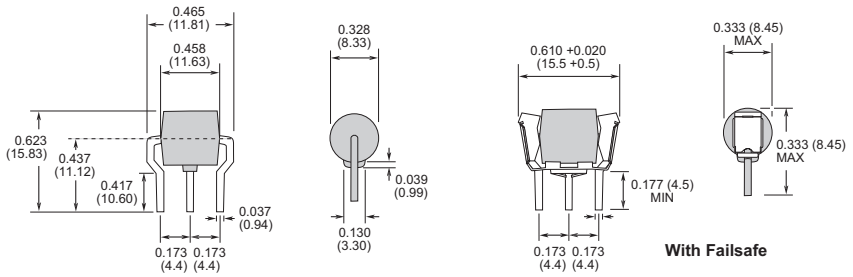

Dimensions are in inches
(and millimeters).

Modified MS-013

The Modified MS-013 is designed to meet mechanical standards as set forth in JEDEC publication number 95.

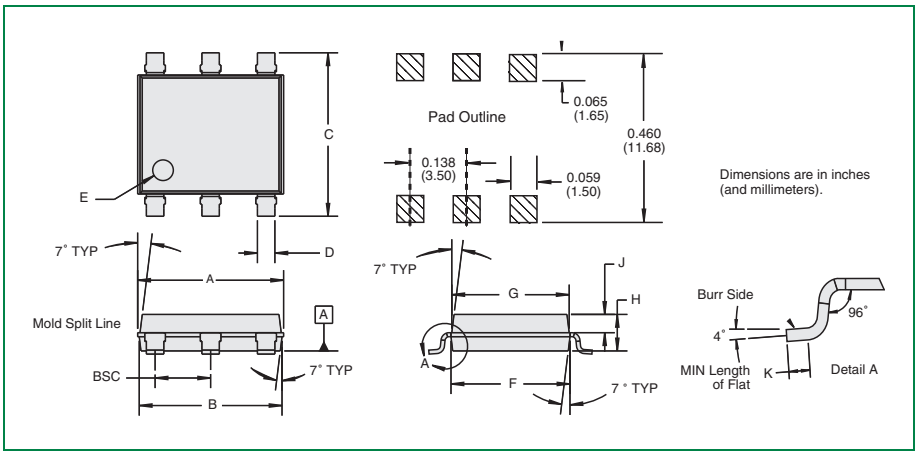

Dimension	Inches		Millimeters	
	MIN	MAX	MIN	MAX
A	0.360	0.364	9.14	9.25
B	0.352	0.356	8.94	9.04
C	0.400	0.412	10.16	10.46
D	0.043	0.043	1.09	1.09
E	0.047	0.055	1.19	1.40
F	0.293	0.297	7.44	7.54
G	0.289	0.293	7.34	7.44
H	0.089	0.093	2.26	2.36
J	0.041	0.049	1.04	1.24
K	0.020		0.51	
BSC	0.133	0.143	3.38	3.63

Notes:
- Dimensions and tolerances per ASME Y14.5M-1982
- Mold flash shall not exceed 0.13 mm per side.
- All leads are insulated from case. Case is electrically non-conductive. (Rated at 1600 V ac rms for one minute from leads to case over the operating temperature range)
- D dimension tolerance is ± 0.005 in (0.127 mm).

 © 2006 Littelfuse, Inc. • Telecom Design Guide

Modified TO-220

The Modified TO-220 package is designed to meet mechanical standards as set forth in JEDEC publication number 95.

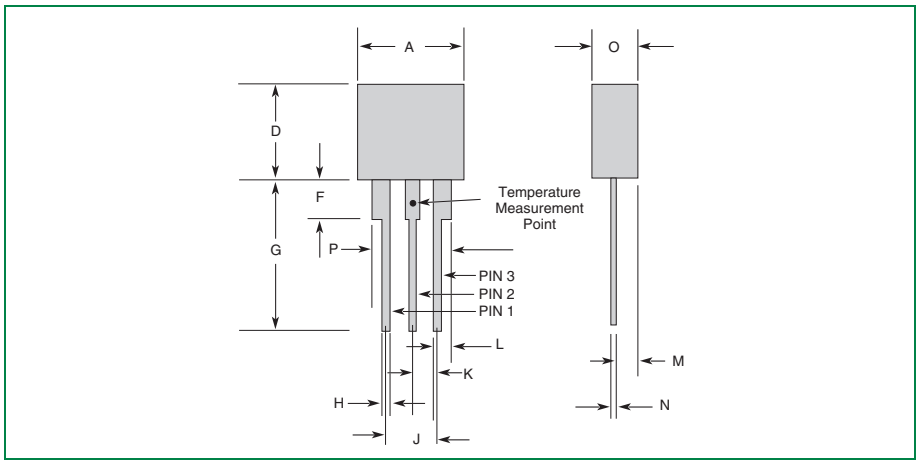

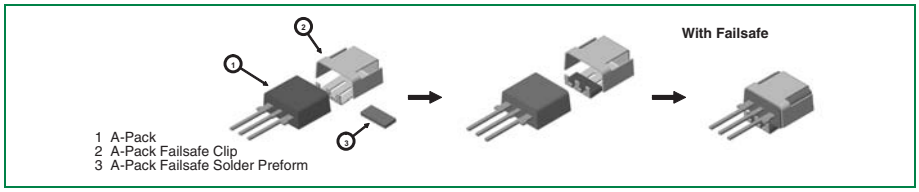

Dimension	Inches		Millimeters	
	MIN	MAX	MIN	MAX
A	0.400	0.410	10.16	10.42
D	0.360	0.375	9.14	9.53
F	0.110	0.130	2.80	3.30
G	0.540	0.575	13.71	14.61
H	0.025	0.035	0.63	0.89
J	0.195	0.205	4.95	5.21
K	0.095	0.105	2.41	2.67
L	0.075	0.085	1.90	2.16
M	0.070	0.085	1.78	2.16
N	0.018	0.024	0.46	0.61
O	0.178	0.188	4.52	4.78
P	0.290	0.310	7.37	7.87

Notes:
- All leads are insulated from case. Case is electrically non-conductive. (Rated at 1600 V ac rms for one minute from leads to case over the operating temperature range)
- Mold flash shall not exceed 0.13 mm per side.

TO-218

The TO-218 package is designed to meet mechanical standards as set forth in JEDEC publication number 95.

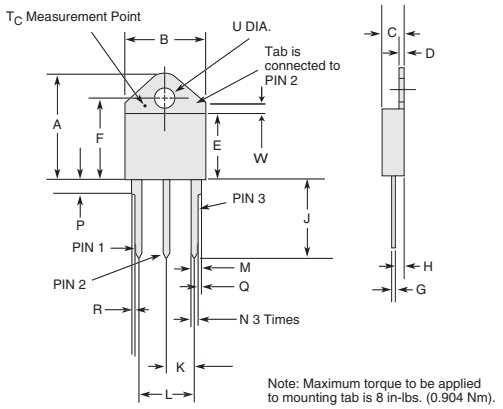

Dimension	Inches		Millimeters	
	MIN	MAX	MIN	MAX
A	0.810	0.835	20.57	21.21
B	0.610	0.630	15.49	16.00
C	0.178	0.188	4.52	4.78
D	0.055	0.070	1.40	1.78
E	0.487	0.497	12.37	12.62
F	0.635	0.655	16.13	16.64
G	0.022	0.029	0.56	0.74
H	0.075	0.095	1.91	2.41
J	0.575	0.625	14.61	15.88
K	0.211	0.219	5.36	5.56
L	0.422	0.437	10.72	11.10
M	0.100	0.110	2.54	2.79
N	0.045	0.055	1.14	1.40
P	0.095	0.115	2.41	2.92
R	0.008	0.016	0.20	0.41
S	0.038	0.048	0.97	1.22
T	0.025	0.032	0.64	0.81
U	0.159	0.163	4.04	4.14
V	0.090	0.100	2.29	2.54

Notes:
- Mold flash shall not exceed 0.13 mm per side.
- Maximum torque to be applied to mounting tab is 8 in-lbs. (0.904 Nm).
- Pin 3 has no connection.
- Tab is non-isolated (connects to middle pin).

 © 2006 Littelfuse, Inc. • Telecom Design Guide

R Package—TO-220AB

The R Package TO-220 is designed to meet mechanical standards as set forth in JEDEC publication number 95 except for L and P dimensions.

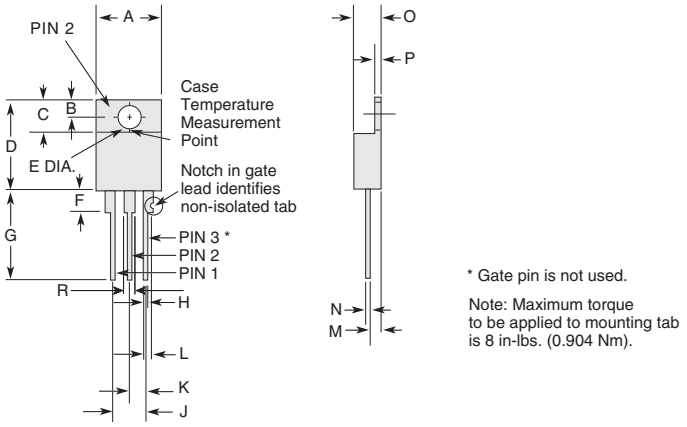

Dimension	Inches		Millimeters	
	MIN	MAX	MIN	MAX
A	0.380	0.420	9.65	10.67
B	0.105	0.115	2.66	2.92
C	0.230	0.250	5.85	6.35
D	0.590	0.620	14.98	15.75
E	0.142	0.147	3.61	3.73
F	0.110	0.130	2.80	3.30
G	0.540	0.575	13.71	14.60
H	0.025	0.035	0.63	0.89
J	0.195	0.205	4.95	5.21
K	0.095	0.105	2.41	2.67
L	0.060	0.075	1.52	1.91
M	0.070	0.085	1.78	2.16
N	0.018	0.024	0.45	0.61
O	0.178	0.188	4.52	4.78
P	0.045	0.060	1.14	1.53
R	0.038	0.048	0.97	1.22

Notes:
- Mold flash shall not exceed 0.13 mm per side.
- Maximum torque to be applied to mounting tab is 8 in-lbs. (0.904 Nm).
- Pin 3 has no connection.
- Tab is non-isolated (connects to middle pin).

N Package—TO-263

The N Package TO-263 is designed to meet mechanical standards as set forth in JEDEC publication number 95 except for B and F dimensions.

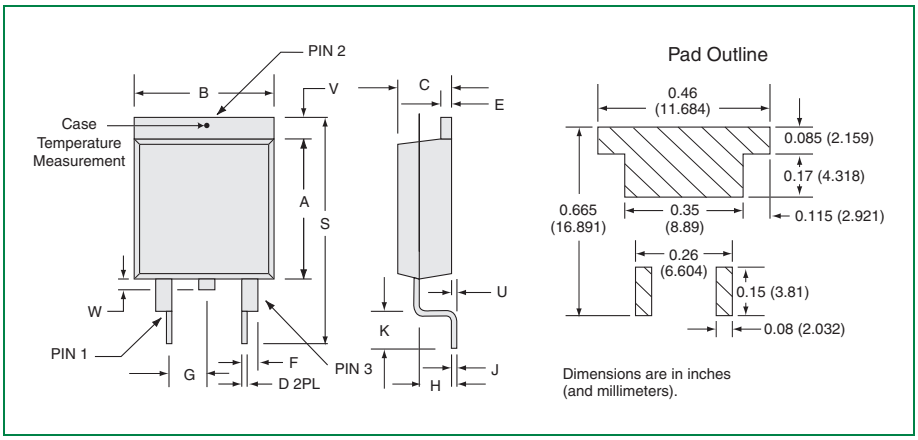

Dimension	Inches		Millimeters	
	MIN	MAX	MIN	MAX
A	0.360	0.370	9.14	9.40
B	0.380	0.420	9.65	10.67
C	0.178	0.188	4.52	4.78
D	0.025	0.035	0.63	0.89
E	0.048	0.055	1.22	1.40
F	0.060	0.075	1.52	1.91
G	0.095	0.105	2.41	2.67
H	0.083	0.093	2.11	2.36
J	0.018	0.024	0.46	0.61
K	0.090	0.110	2.29	2.79
S	0.590	0.625	14.99	15.87
V	0.035	0.045	0.89	1.14
U	0.002	0.010	0.05	0.25
W	0.040	0.070	1.02	1.78

Notes:
- Mold flash shall not exceed 0.13 mm per side.
- Maximum torque to be applied to mounting tab is 8 in-lbs. (0.904 Nm).
- Pin 3 has no connection.
- Tab is non-isolated (connects to middle pin).

 © 2006 Littelfuse, Inc. • Telecom Design Guide

SIDACtor® Cell

The following illustration shows the dimensions of the *SIDACtor* cell.

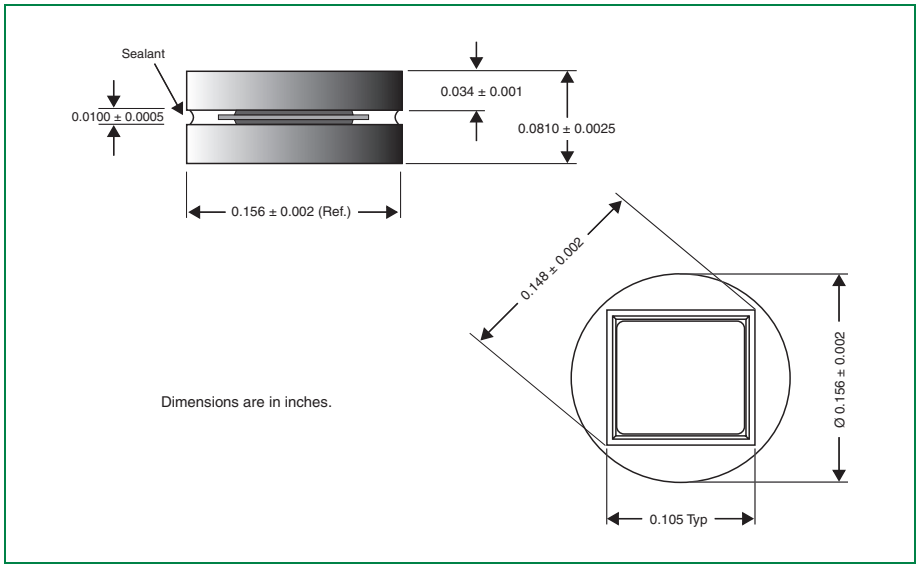

TeleLink® Surface Mount Fuse—Package Dimensions

The following illustration shows the end view dimensions of a *TeleLink* fuse.

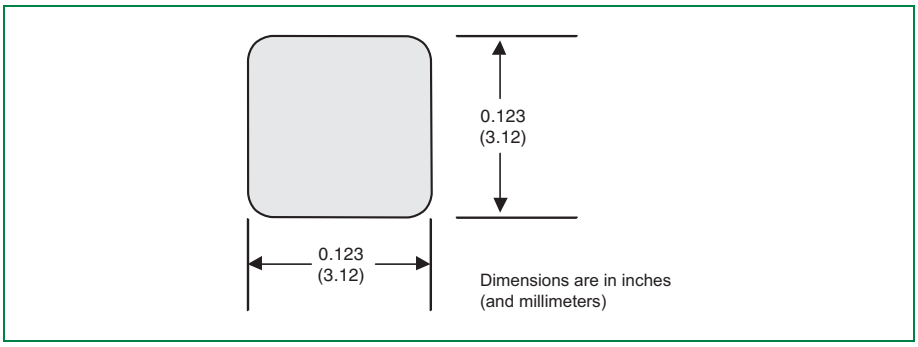

The following illustration shows the top view or side view dimensions of a *TeleLink* fuse.

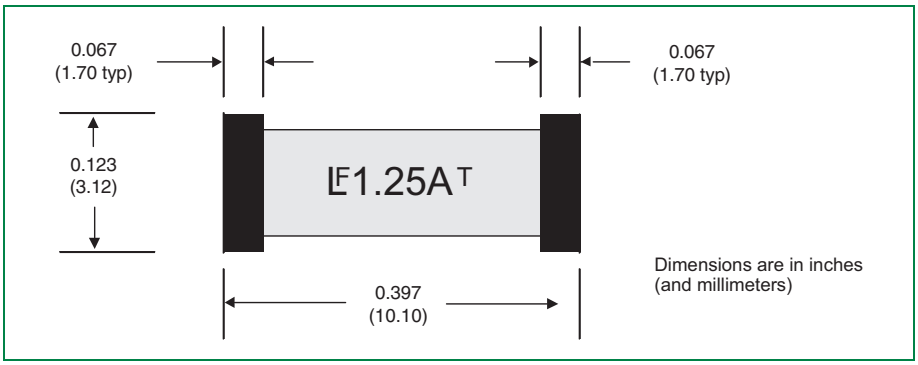

The following illustration shows the footprint dimensions of a *TeleLink* fuse.

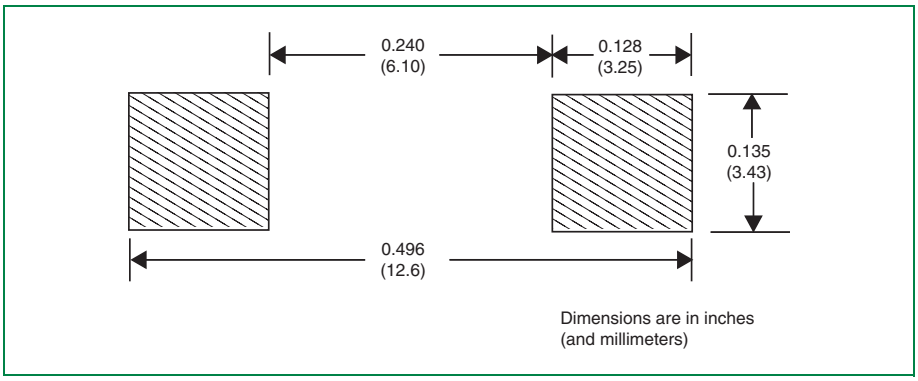

 © 2006 Littelfuse, Inc. • Telecom Design Guide

Electronic Fuses—Package Dimensions

2AG *Slo-Blo*® Fuse—229P / 230P Series

The following illustration shows the dimensions of the 2AG *Slo-Blo* Fuse—229P / 230P series. The body is glass with nickel-plated brass fuse caps. Axial lead material is solder coated copper.

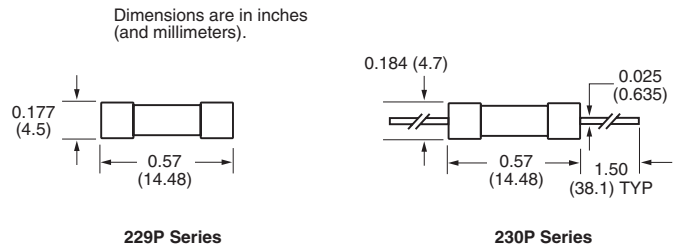

*NANO*²® Fuse—451 / 453 Series

The following illustration shows the dimensions of a *NANO*² Fuse—451 / 453 series. The body is ceramic with tin-lead alloy or silver-plated caps. RoHS compliant terminations (451L series) are gold over nickel-plated caps.

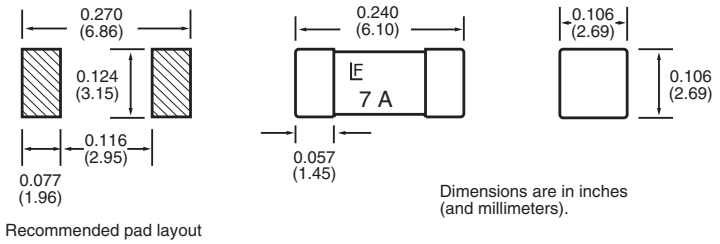

NANO[2]® Fuse—452 / 454 Series

The following illustration shows the dimensions of a *NANO*[2] Fuse—452 / 454 series. The body is ceramic with tin-lead alloy or silver-plated caps. RoHS compliant terminations (452L series) are gold over nickel-plated caps.

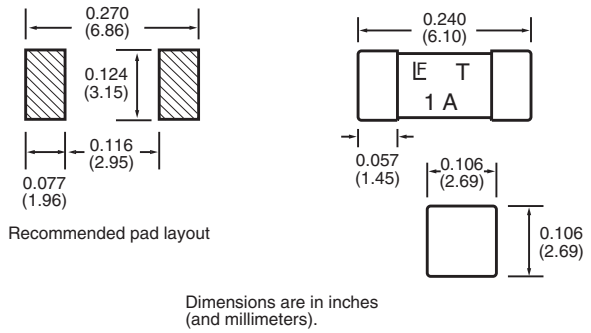

SMF *OMNI-BLOK*® Fuse Block—154 Series

The following illustration shows the dimensions of the SMF *OMNI-BLOK* Fuse Block—154 series.

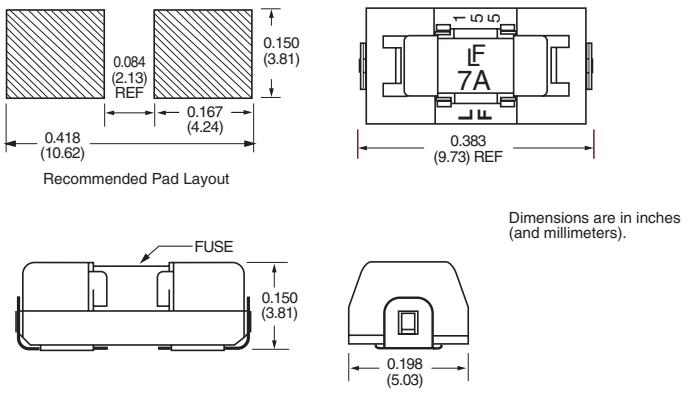

 © 2006 Littelfuse, Inc. • Telecom Design Guide

NANO$^{2®}$ 250 V UMF Fuse—464 / 465 Series

The following illustration shows the dimensions of the *NANO*^{2} 250 V Fuse—464 / 465 series. The body is high-performance ceramic, and the terminations are silver-plated brass.

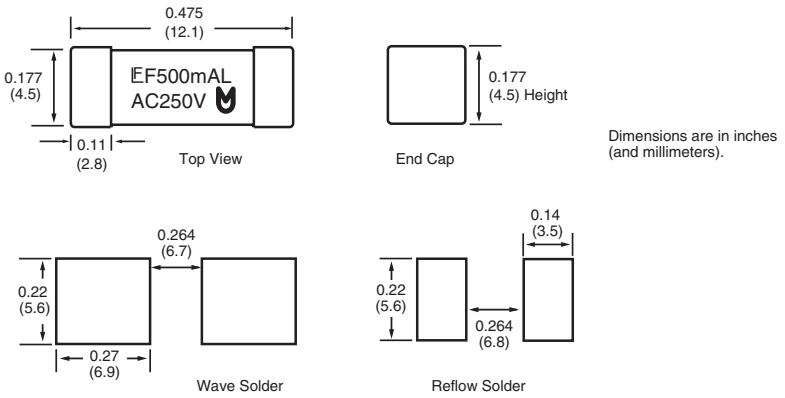

481 Series Alarm Indicating Fuse

The following illustration shows the dimensions of the 481 series alarm indicating fuse. The body is polyphenylene sulfide (UL94V0), and the terminations are beryllium copper / tin plated. Optional lens are nylon.

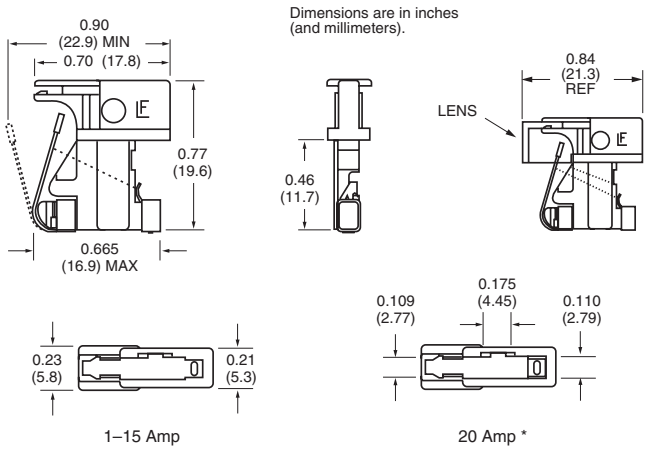

* 20 A fuseholder must be used and is designed to accept all ratings up to 20 amps.
Fuse is keyed to prevent insertion in lower rated holders

482 Series Alarm Indicating Fuseholder

The following illustration shows the 482 series alarm indicating fuseholder. The body is black phenolic. The fuse terminals are tin-plated beryllium copper, and the alarm terminal is tin-plated brass.

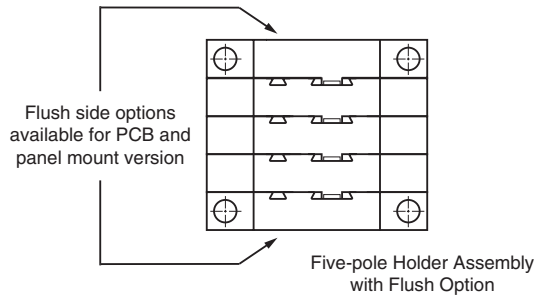

 © 2006 Littelfuse, Inc. • Telecom Design Guide

DC Power Fuses—Package Dimensions

L17T Series

The following illustration shows the dimensions of the L17T series telecommunications power fuse.

Contact Littelfuse for characteristic curves.

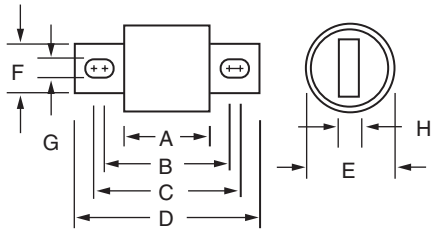

Dimensions	70 A – 250 A		300 A – 800 A		1000 A – 1200 A	
	Inches	Millimeters	Inches	Millimeters	Inches	Millimeters
A	1.156	29.4	1.25	31.8	1.344	34
B	1.875	47.6	1.938	49.2	—	—
C	2.188	55.6	2.563	65.1	—	—
D	—	67.5	3.5	88.9	4.063	103.12
E	1.656	25.4	1.5	38.1	—	—
F	0.875	22.2	1	25.4	1.5	38.1
G	0.313	7.9	0.406	10.3	—	—
H	0.188	4.8	0.25	6.35	0.25	6.35

TLN Series

The following illustrations show the dimensions of the TLN series telecommunications power fuse. (The TLN series replaces competitors' TPN and TGN series.)

Contact Littelfuse for characteristic curves.

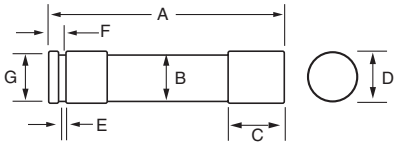

Figure 1

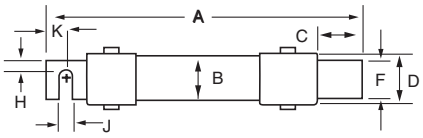

Figure 2

Figure 1 Dimensions	1 A – 30 A		35 A – 60 A	
	Inches	Millimeters	Inches	Millimeters
A	2	50.8	3	76.2
B	0.5	12.7	0.75	19.1
C	0.5	12.7	0.625	15.9
D	0.563	14.3	0.813	20.6
E	0.078	2	0.094	2.4
F	0.156	4	0.188	4.8
G	0.375	9.5	0.625	15.9
H	—	—	—	—
J	—	—	—	—
K	—	—	—	—

Figure 2 Dimensions	70 A – 100 A		110 A – 200 A		225 A – 400 A		450 A – 600 A	
	Inches	Millimeters	Inches	Millimeters	Inches	Millimeters	Inches	Millimeters
A	5.875	149.2	7.125	181	8.625	219.1	10.375	263.5
B	1	25.4	1.5	38.1	2	50.8	2.5	63.5
C	1.063	27	1.469	37.3	1.938	49.2	2.375	60.3
D	1.063	27	1.594	40.5	2.094	53.2	2.594	65.9
E	0.125	3.2	0.188	4.8	0.25	6.4	0.25	6.4
F	0.75	19.1	1.125	28.6	1.625	41.3	2	50.8
G	1.25	31.6	1.844	46.8	2.344	59.5	2.844	72.2
H	0.25	6.4	0.438	11.1	0.625	15.9	0.75	19.1
J	0.281	7.1	0.281	7.1	0.406	10.3	0.531	13.5
K	0.5	12.7	0.688	17.5	0.938	23.8	1.125	28.6

 © 2006 Littelfuse, Inc. • Telecom Design Guide

TLS Series

The following illustration shows the dimensions of the TLS series telecommunications power fuse. (The TLS series replaces competitors' TPS and TGS series.)

Note: Contact Littelfuse for characteristic curves and additional mounting configurations.

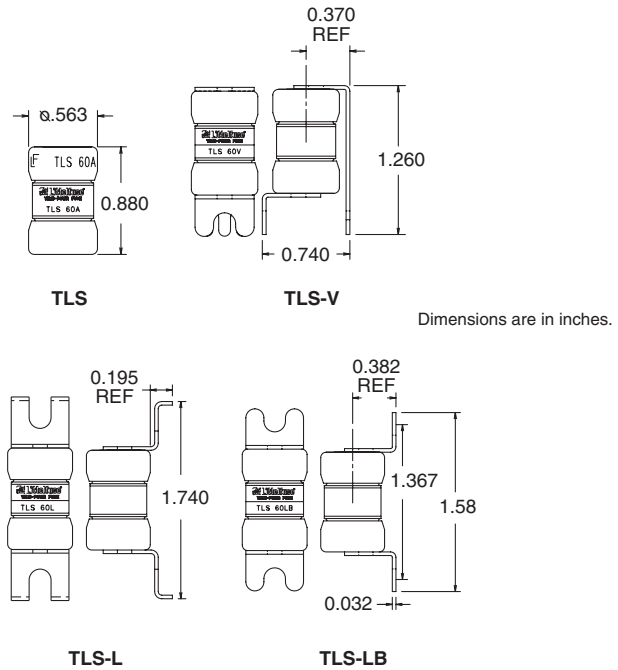

LTFD Series

The following illustration shows the dimensions of the LTFD 6001 series (0 A – 800 A) telecommunications power fuse. Stud size is as follows:

- 0.75 – 16x3.5 inches
- 0.875 – 14x3.5 inches

Dimensions are for reference only.

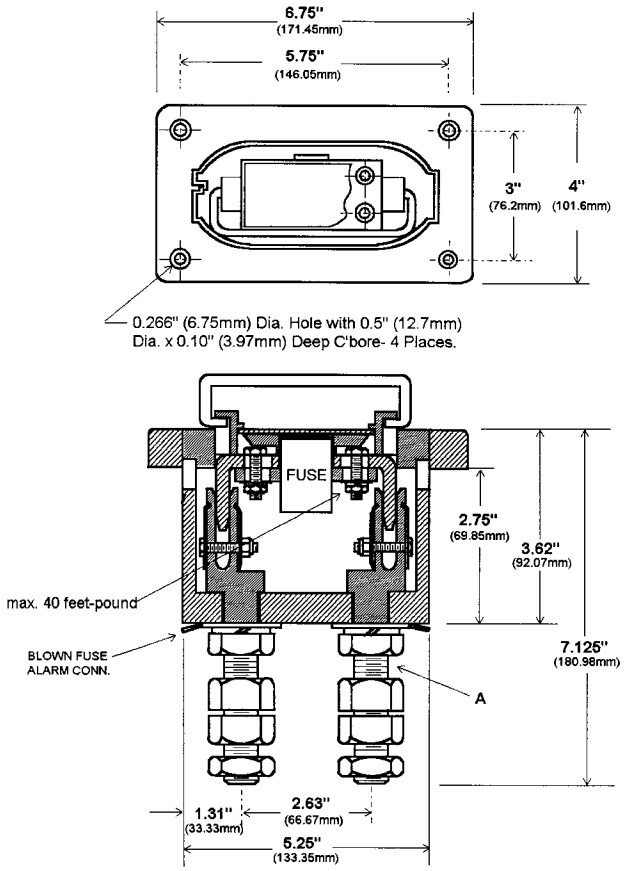

 © 2006 Littelfuse, Inc. • Telecom Design Guide

The following illustration shows the dimensions of the LTFD 1200 series (900 A – 1200 A) telecommunications power fuse. Stud size is 1.12 – 12x4 inches.

Dimensions are for reference only.

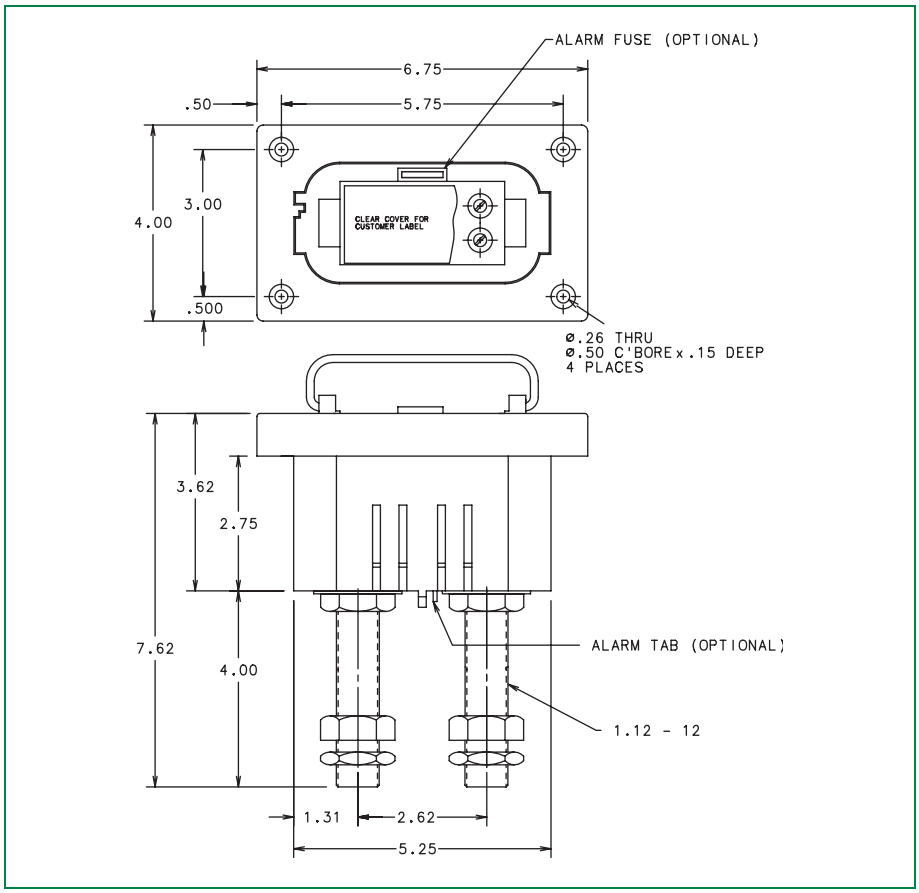

LTFD 101 Series

The following illustration shows the dimensions of the LTFD 101 series telecommunications power fuse. Contact Littelfuse for additional options and dimensions.

Dimensions are for reference only.

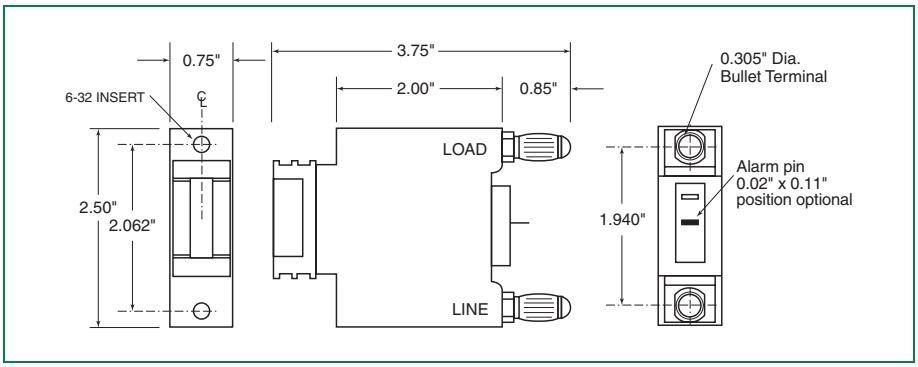

 © 2006 Littelfuse, Inc. • Telecom Design Guide

Summary of Packing Options

Package Type	Description	Packing Quantity	Added Suffix	Industry Standard
SL1122A Series	Bulk Pack (10 x Trays of 100)	1000	Standard	EIA-RS-296
SL0902A Series	Tape and Reel Pack	1500	SM	EIA-481-2
	Bulk Pack	1000	C	N/A
SL1002A Series	Tape and Reel Pack (tape width 16 mm)	1000	SM	EIA-481-2
	Bulk Pack	1000	C	N/A
SL1003A Series	Tape and Reel Pack	700	SM	EIA-481-2
	10 x Trays of 100	1000	R	N/A
	Bulk Pack	1000	C	N/A
SL1011A/B Series	Tape and Reel Pack	1000	A	EIA-RS-296
	Bulk Pack	1000	C	N/A
	Bulk Pack (10 x Trays of 100)	1000	Formed Options	N/A
SL1021A/B Series	Bulk Pack (10 x Trays of 100)	1000	R, RF, RS	EIA-RS-296
SL1024A/B Series	Bulk Pack (10 x Trays of 100)	1000	R, RF, RS	N/A

Package Type	Description	Packing Quantity	Added Suffix	Industry Standard
SL1411A Series	Tape and Reel Pack	1000	A	EIA-296
	Bulk Pack	1000	C	N/A
DO-214AA SA, SB, SC, SD, including MC 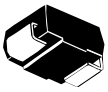 3-lead	Embossed Carrier Reel Pack	2500	RP	EIA-481-1
TO-92 EA, EB, EC, including MC Note: Standard lead spacing for TO-92 reel pack is 0.200” (RP2).	Bulk Pack	2000	Standard	N/A
	Tape and Reel Pack	2000	RP1, RP2	EIA-468-B
	Ammo Pack	2000	AP	EIA-468-B
T10A [DO-15] 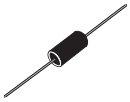	Tape and Reel Pack	5000	RP	EIA-468-B
	Bulk Pack	1000	N/A	N/A
T10B [DO-201AD]	Tape and Reel Pack	1000	RP	EIA-468-B
	Bulk Pack	500	N/A	N/A
[T10C] 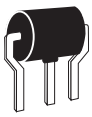	Bulk Pack (10 x Trays of 100)	1000	N/A	N/A
Modified MS-013 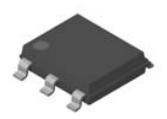	Tape and Reel Pack	1500	RP	EIA-481-1
	Tube Pack	50 per tube, 10 tubes per container	TP	EIA-481-1

Package Type	Description	Packing Quantity	Added Suffix	Industry Standard
TO-220 AA, AB, AC, AD 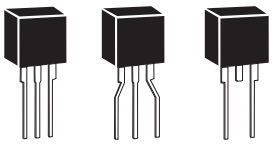 Type 60 Type 61	Bulk Pack	500	Standard	N/A
	Tape and Reel Pack	700	RP	EIA-468-B
	Bulk Pack for Type 60 lead form	500	BP	N/A
	Tape and Reel Pack for Type 61 lead form	700	RP	EIA-468-B
	Tube Pack	50 per tube, 10 tubes per container	TP	EIA-468-B
TO-220AB 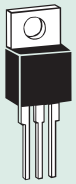	Bulk Pack	500	Standard	N/A
TO-218 ME 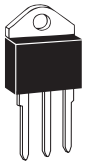	Bulk Pack	250	Standard	N/A
TO-263 D^2PAK 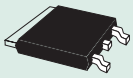	Tube Pack	50 per tube, 10 tubes per container	TP	
	Tape and Reel Pack	500	RP	EIA-481-2
MS-012 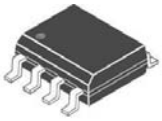	Tape and Reel Pack	5000	Standard	EIA-481-1
SIDACtor® Cell 	Bulk Pack (25 x Trays of 200)	5000	—	N/A

Package Type	Description	Packing Quantity	Added Suffix	Industry Standard
TeleLink® Surface Mount Fuse 461 Series	Embossed Carrier Reel Pack	2500	RP	EIA-481-B
	Bulk Pack	5000	BP	N/A
	Tape and Reel Pack (16 mm)	2500	ERT16	
229P / 230P Series	Bulk Pack	1000	M	EIA-296
	Tape and Reel Pack	1500	DRT1	EIA-296
	Tape and Reel Pack	2500	ERT1	EIA-296
451 / 453 Series	Tape and Reel Pack (12 mm)	1000	MR	EIA-RS481-1
	Tape and Reel Pack (12 mm)	5000	NR	EIA-RS481-1
452 / 454 Series	Tape and Reel Pack (12 mm)	1000	MR	EIA-RS481-1
	Tape and Reel Pack (12 mm)	5000	NR	EIA-RS481-1
154 Series	Tape and Reel Pack (16 mm)	1500	DR	EIA-481
464 Series	Tape and Reel Pack (24 mm)	1500	DR	EIA-RS481-1
465 Series	Tape and Reel Pack (24 mm)	1500	DR	EIA-RS481-1
481 Series	Bulk Pack	Five-pack	V	
	Bulk Pack	100-piece box	H	

Package Type	Description	Packing Quantity	Added Suffix	Industry Standard
482 Series	Contact Littelfuse for packing and ordering information.			
L17T Series	Contact Littelfuse for packing and ordering information.			
TLN Series	Contact Littelfuse for packing and ordering information.			
TLS Series	Contact Littelfuse for packing and ordering information.			
LTFD Series	Contact Littelfuse for packing and ordering information.			
LTFD 101 Series	Contact Littelfuse for packing and ordering information.			

Packing Options

SL1122A Series

Tape and reel packing options meet all specifications as set forth in EIA-481-1. Bulk pack quantity is 1000 (10 trays of 100). Depth of tray with lid is 22 mm; width of tray is 222 mm x 222 mm.

SL0902A Series

Tape and reel packing options meet all specifications as set forth in EIA-481-2. Standard reel pack quantity is 1500. Bulk pack quantity is 1000.

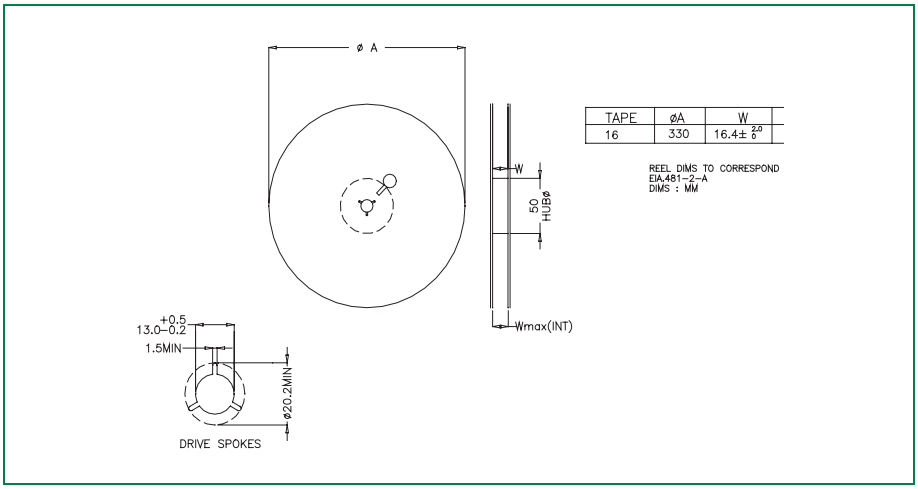

 © 2006 Littelfuse, Inc. • Telecom Design Guide

SL1002A Series

Tape and reel packing options meet all specifications as set forth in EIA-481-2. Standard reel pack quantity is 1000. Bulk pack quantity is 1000.

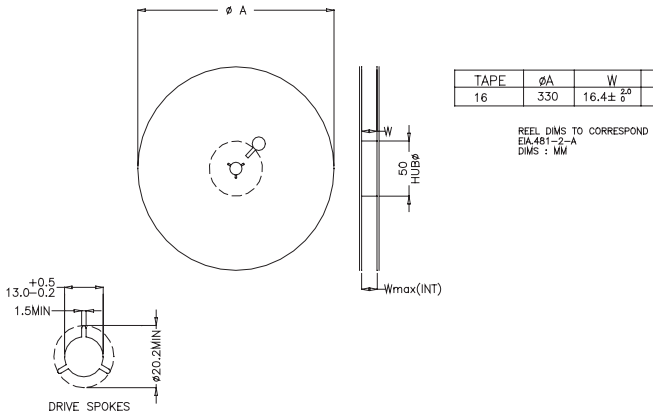

TAPE	øA	W
16	330	16.4± $^{2.0}_{0}$

SL1003A Series

Tape and reel packing options meet all specifications as set forth in EIA-481-2. Standard reel pack quantity is 700. Bulk pack quantity is 1000.

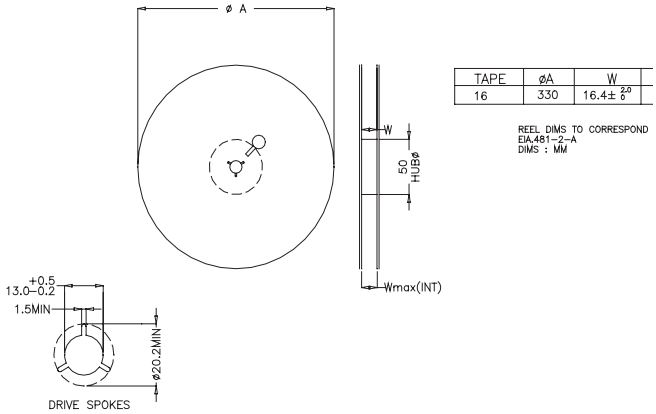

TAPE	øA	W
16	330	16.4± $^{2.0}_{0}$

SL1011A/B Series

Tape and reel packing options meet all specifications as set forth in EIA-296. Standard reel pack quantity is 1000. Bulk pack quantity is 1000.

SL1021A/B Series

Bulk pack quantity is 1000 (10 trays of 100). Depth of tray with lid is 22 mm; width of tray is 222 mm x 222 mm.

SL1024A/B Series

Bulk pack quantity is 1000 (10 trays of 100). Depth of tray with lid is 22 mm; width of tray is 222 mm x 222 mm.

SL1411A Series

Tape and reel packing options meet all specifications as set forth in EIA-296. Standard reel pack quantity and bulk pack quantity for axial-leaded devices is 1000 pieces.

Contact Littelfuse for surface mount packaging information.

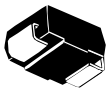

3-lead

DO-214AA

Tape and reel packing options meet all specifications as set forth in EIA-481-1. Standard reel pack quantity is 2500. Bulk pack quantity is 1000.

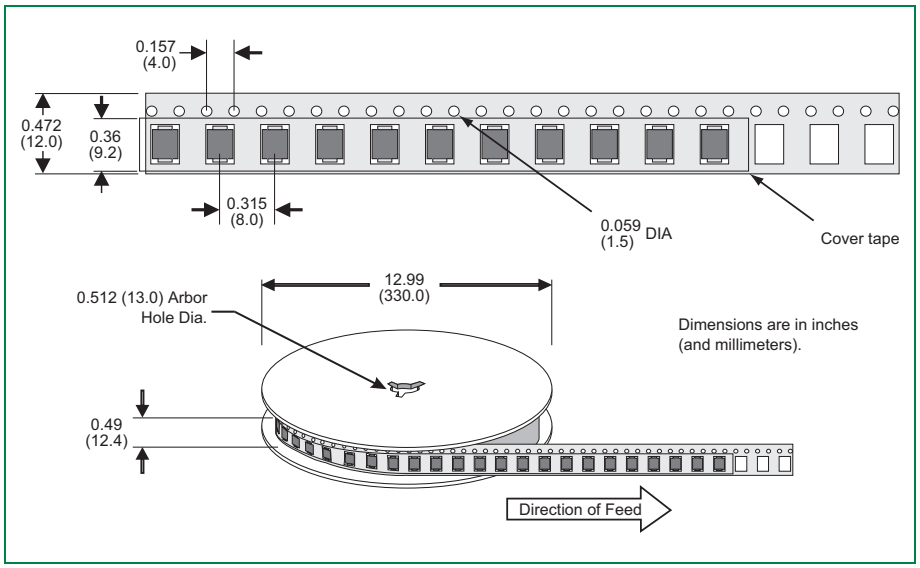

The following illustration shows the DO-214AA component orientation for P0641S, P0721S, P0901S, P1101S, P1301S, P1701S:

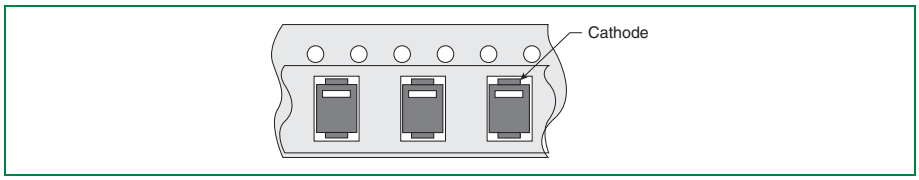

The following illustration shows the modified DO-214 tape and reel:

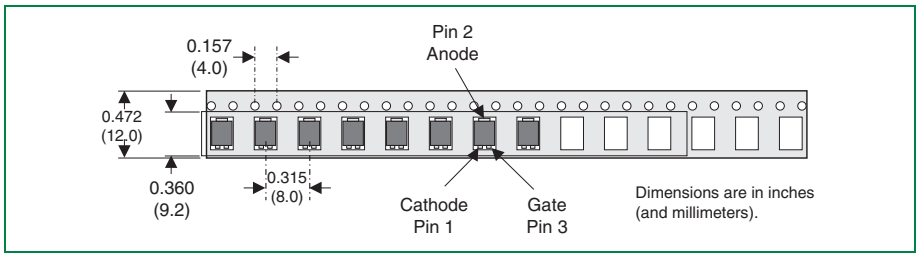

TO-92

Tape and reel packing options meet all specifications as set forth in EIA-468-B. Standard reel pack quantity is 2000.

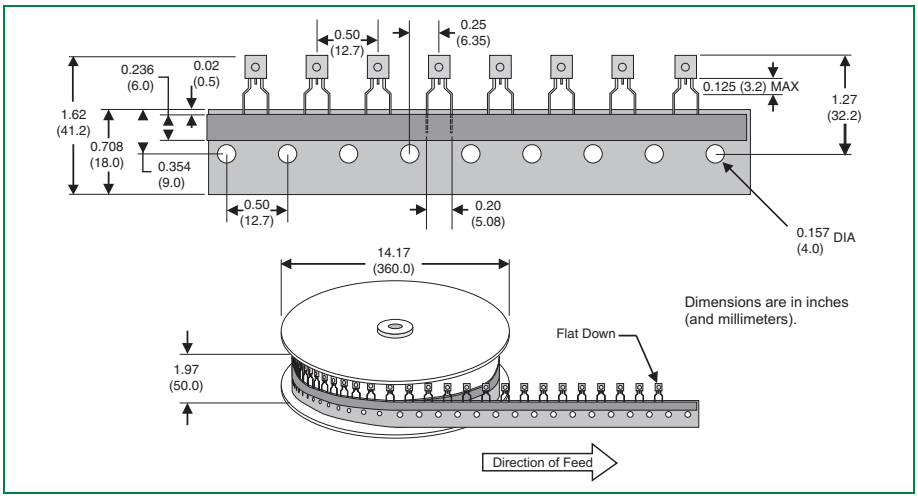

Notes:

- Part number suffix RP2 denotes 0.200” (5 mm) lead spacing and is Littelfuse’s default value.
- Part number suffix RP1 denotes 0.100” (2.54 mm) lead spacing and is available upon request.

The following figure shows the TO-92 Ammo Pack option:

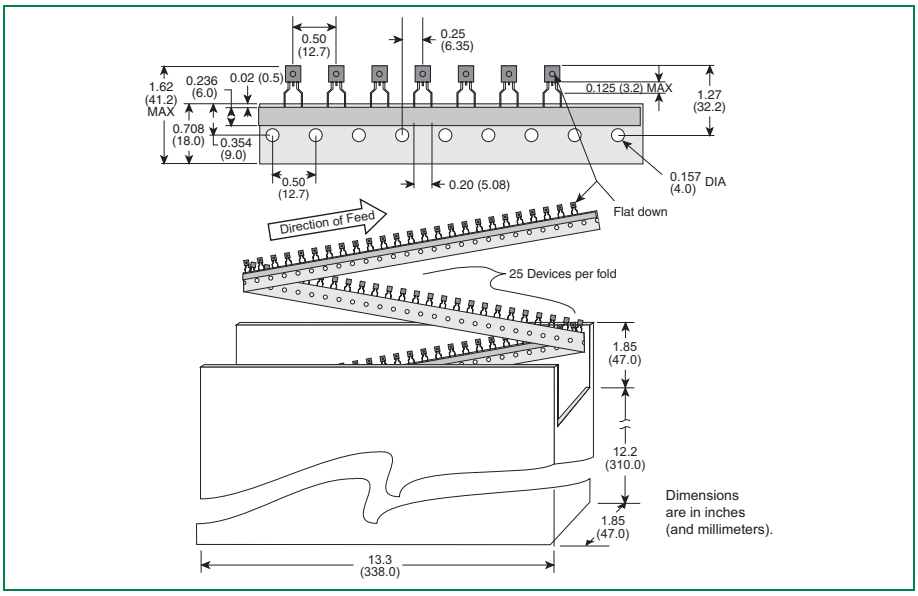

 © 2006 Littelfuse, Inc. • Telecom Design Guide

T10A

Tape and reel packing options for the T10A meet all specifications as set forth in EIA-468-B. Standard reel pack quantity is 5000. Bulk pack quantity is 1000.

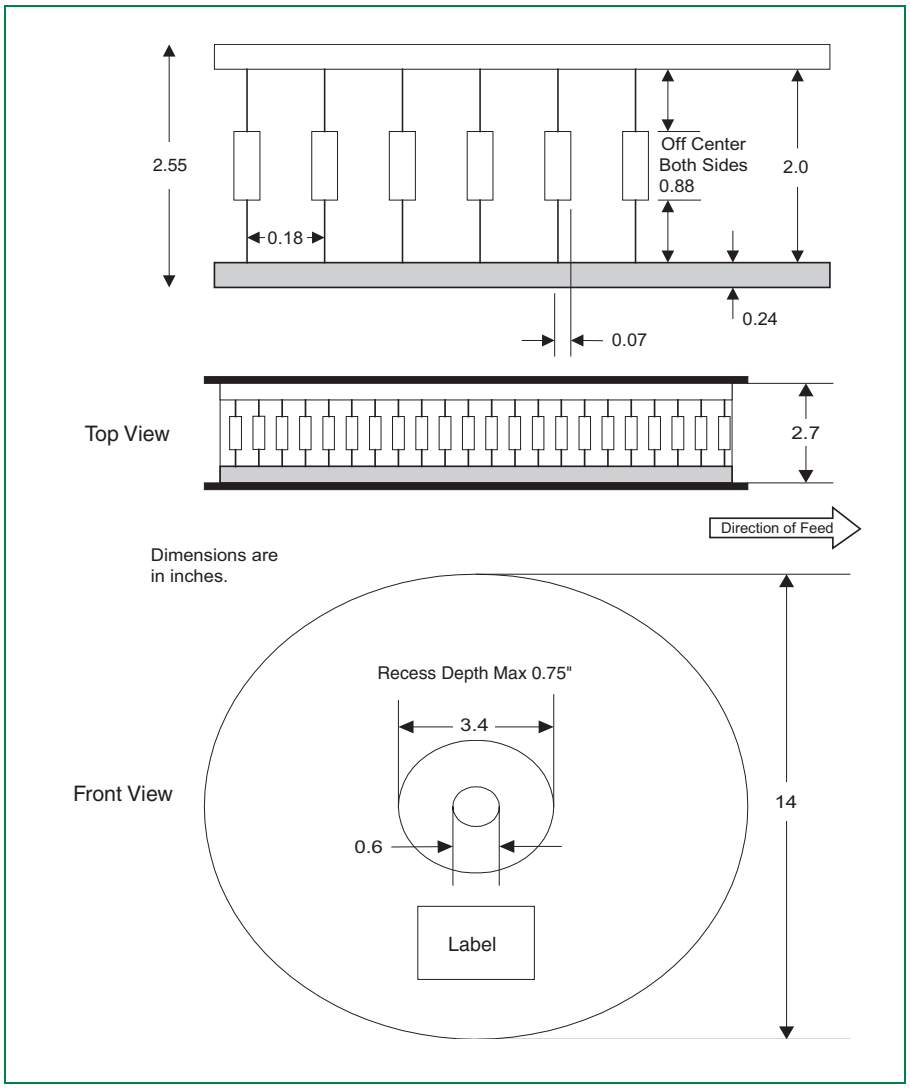

T10B

Tape and reel packing options for the T10B meet all specifications as set forth in EIA-468-B. Standard reel pack quantity is 1000. Bulk pack quantity is 500.

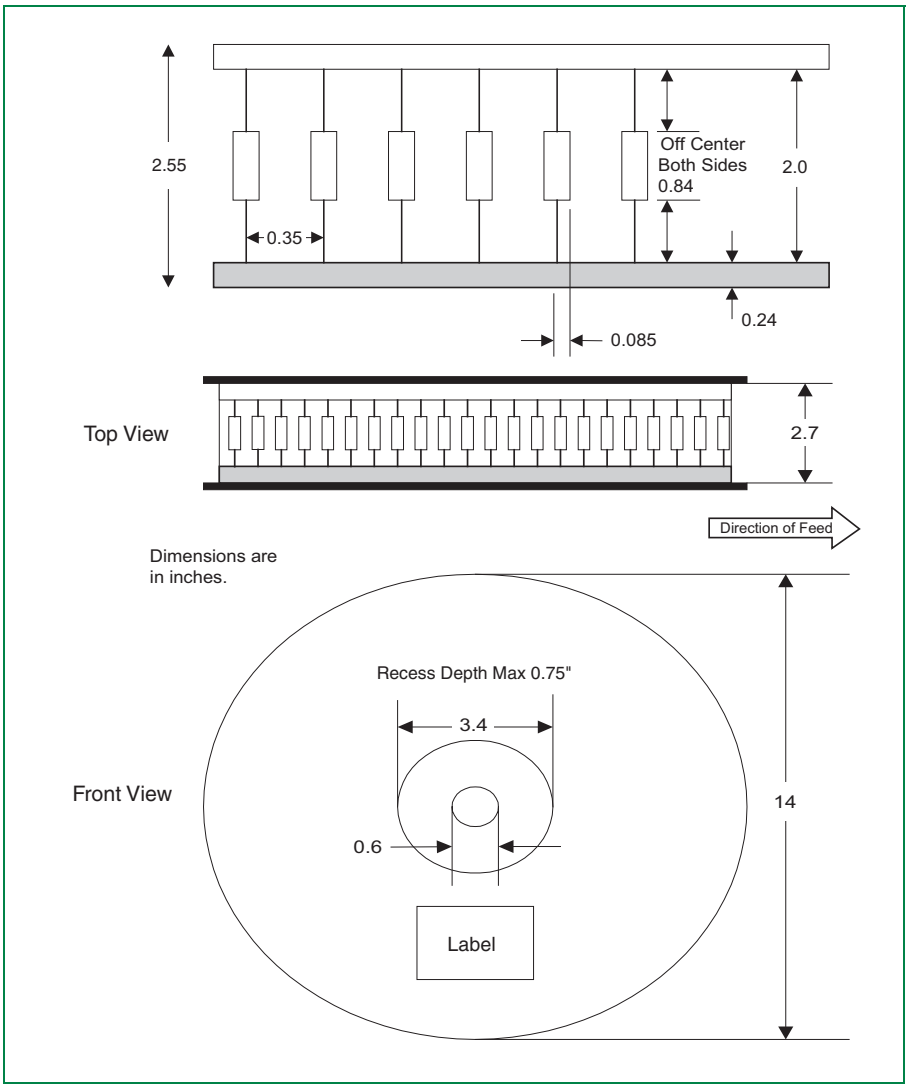

 © 2006 Littelfuse, Inc. • Telecom Design Guide

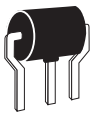

T10C

The following illustration shows the tray for the T10C. Standard tray quantity is 1000 per box (10 trays of 100 each).

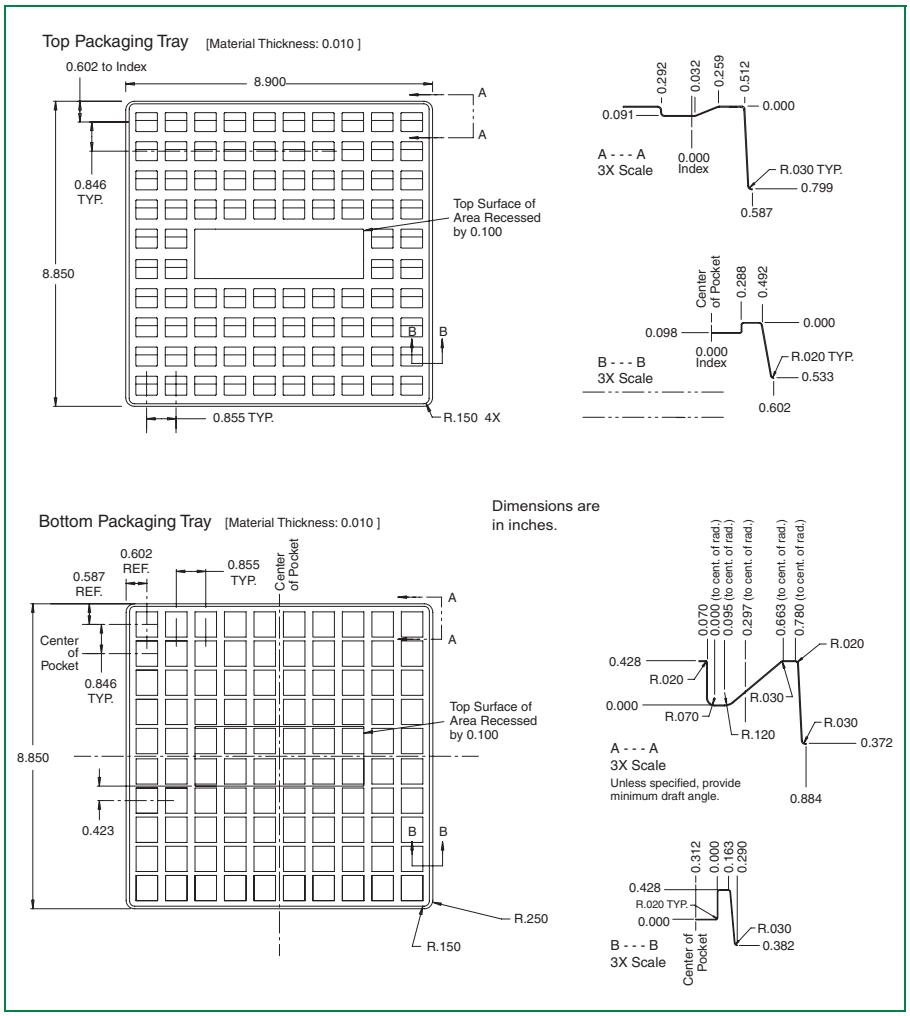

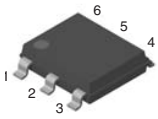

Modified MS-013 Six-pin

Tape and reel packing options meet all specifications as set forth in EIA-468-B. Standard reel pack quantity is 1500.

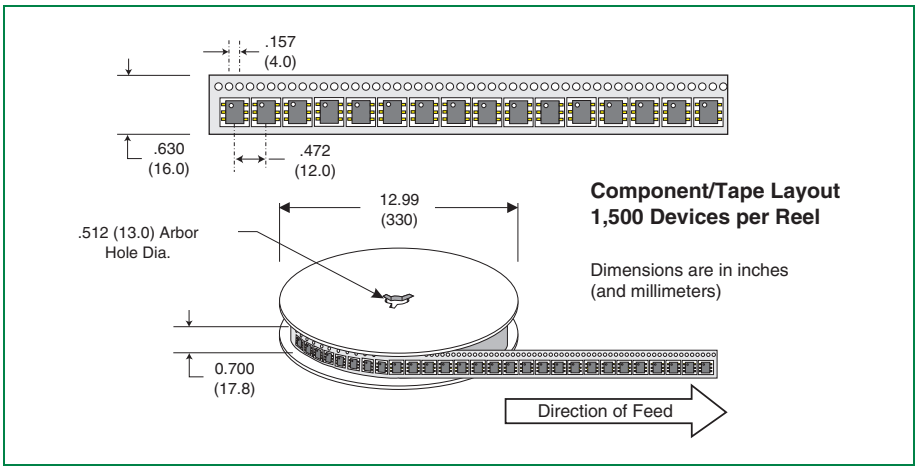

The following illustration shows the tube pack:

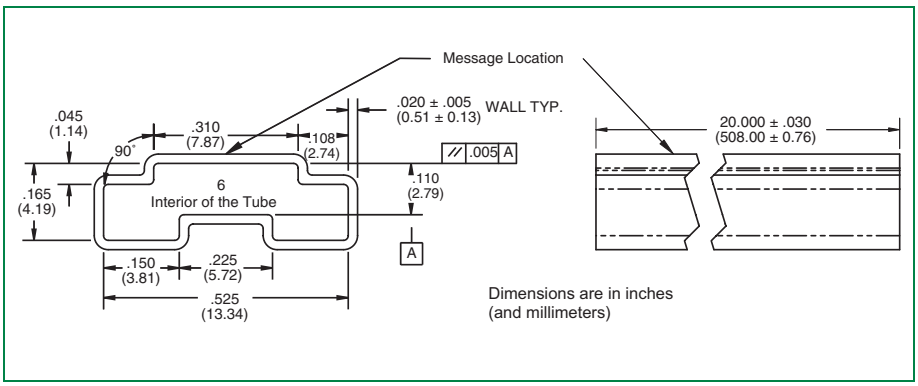

 © 2006 Littelfuse, Inc. • Telecom Design Guide

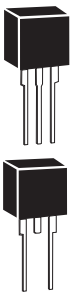

Type 61

Modified TO-220

Tape and reel packing options meet all specifications as set forth in EIA-468-B. Standard reel pack quantity is 700.

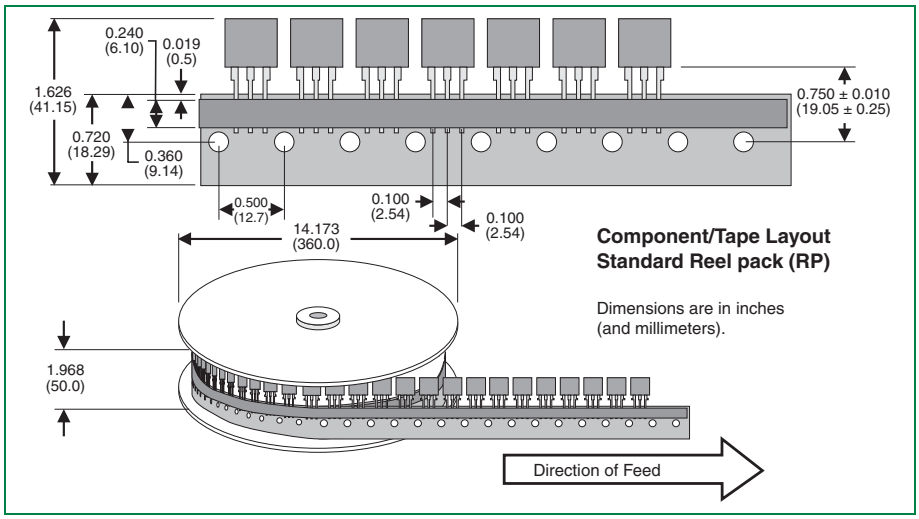

The following illustration shows the tube pack:

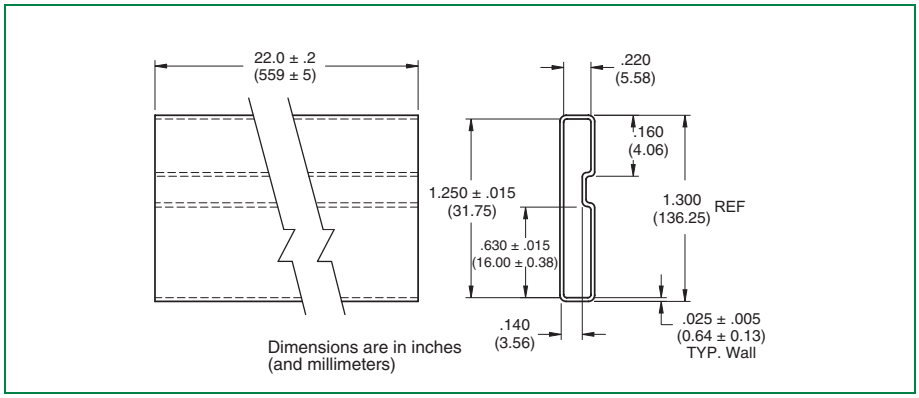

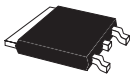

TO-263

Tape and reel packing options meet all specifications as set forth in EIA-481-2. Standard reel pack quantity is 500.

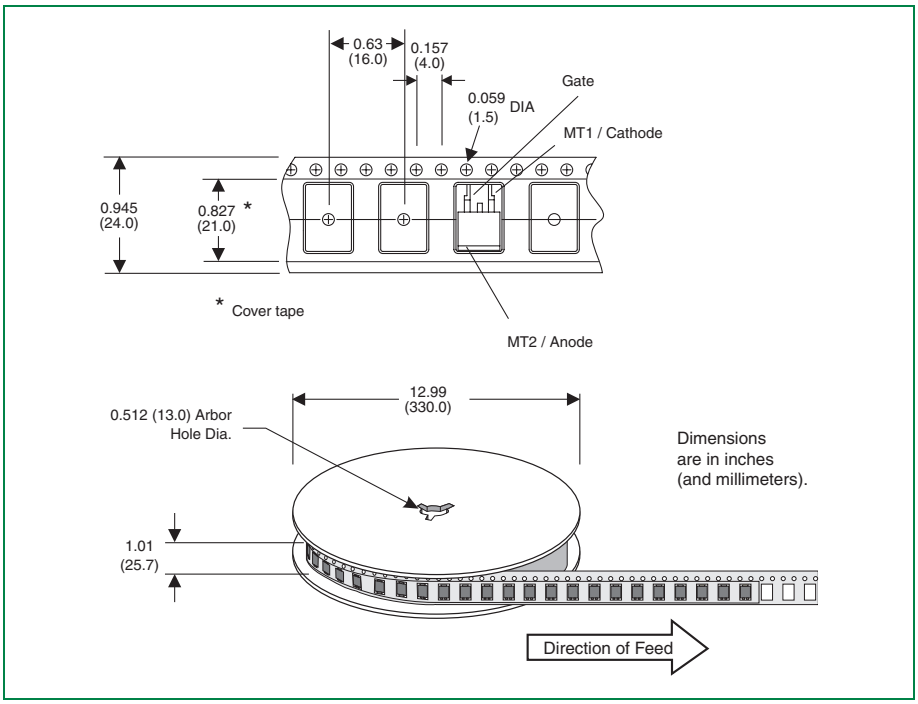

 © 2006 Littelfuse, Inc. • Telecom Design Guide

TeleLink® Surface Mount Fuse

The following illustration shows the dimensions of the 24mm *TeleLink* embossed carrier tape.

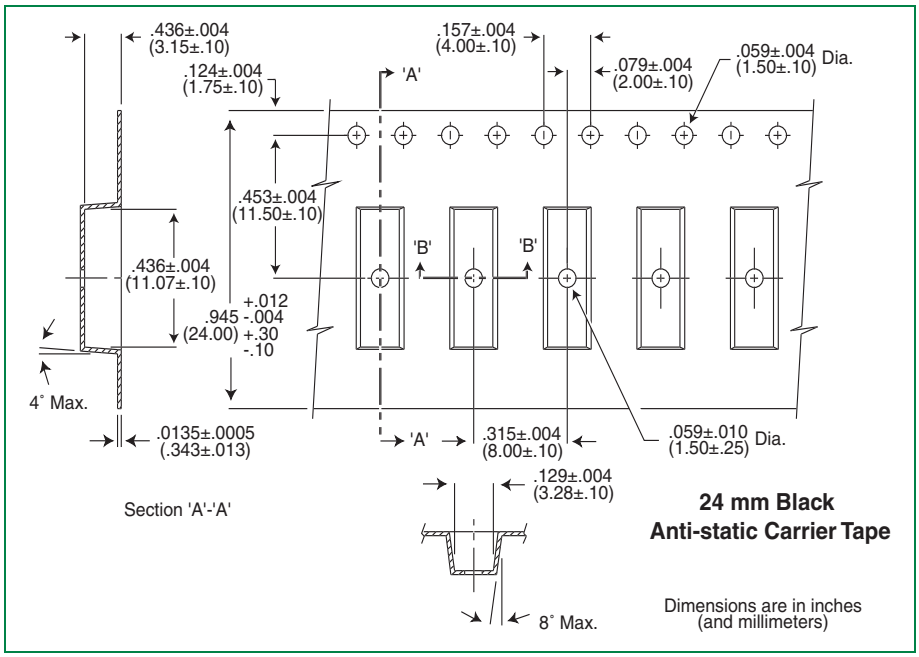

The following illustration shows the dimensions of the *TeleLink* 16 mm carrier tape.

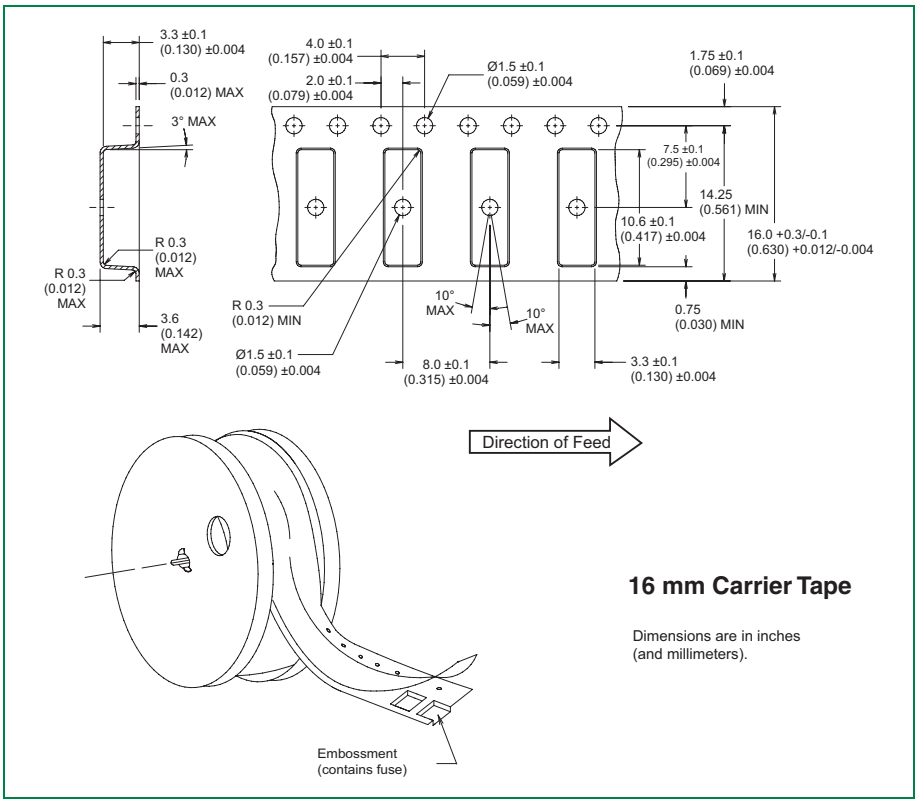

16 mm Carrier Tape

Dimensions are in inches
(and millimeters).

 © 2006 Littelfuse, Inc. • Telecom Design Guide

The following illustration shows the *TeleLink* 13-inch (330 mm), injection-molded, high-impact, anti-static, white, plastic reel. Material conforms to EIA-481-1. Surface resistivity is 1011 Ω/square. Materials comply with ASTM D-257.

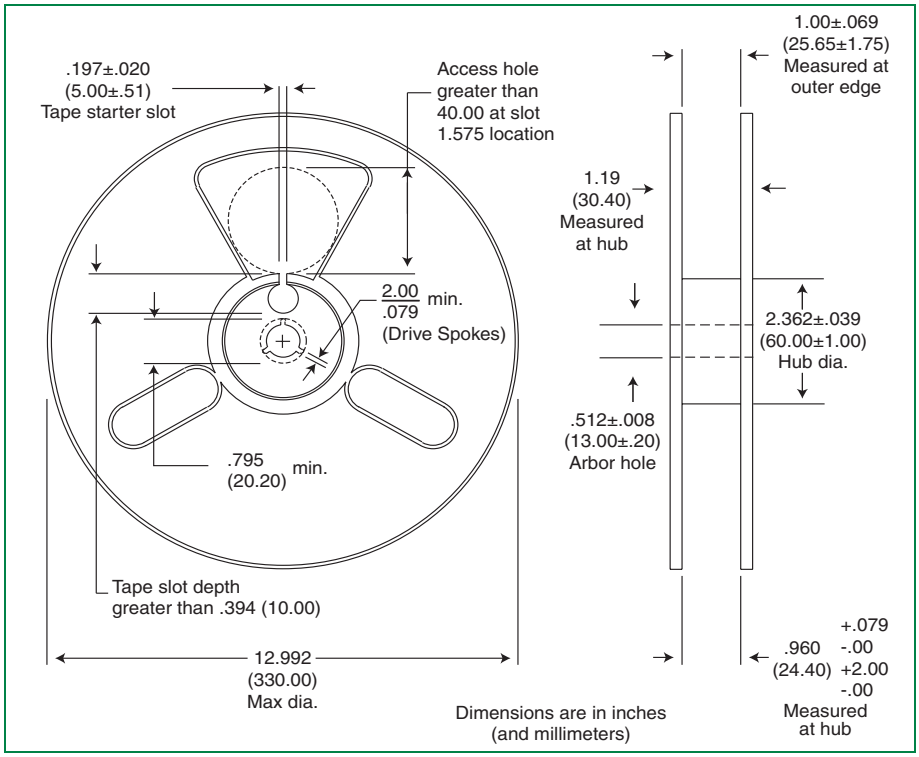

229P / 230P Series

Tape and reel packing options meet all specifications as set forth in EIA-296. Standard reel pack quantity is 1500 and 2500. Bulk pack quantity is 1000.

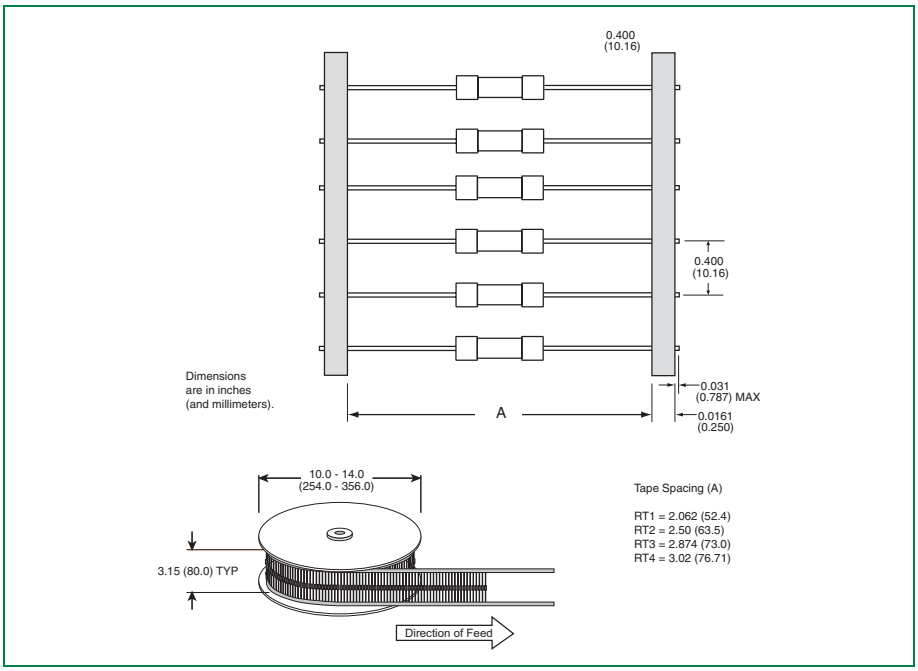

Lead Form Options

Modified TO-220 Type 60

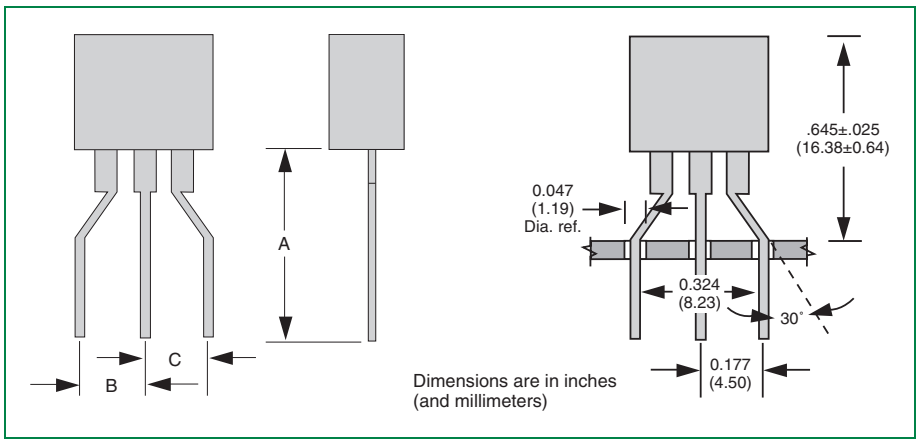

Dimension	Inches		Millimeters	
	Min	Max	Min	Max
A	0.485		12.32	
B	0.162	0.192	4.11	4.88
C	0.162	0.192	4.11	4.88

Modified TO-220 Type 61

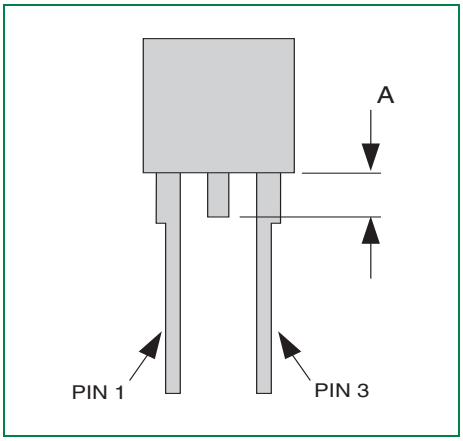

Dimension	Inches		Millimeters	
	Min	Max	Min	Max
A	0.030	0.060	0.762	1.52

Modified TO-220 Type 62

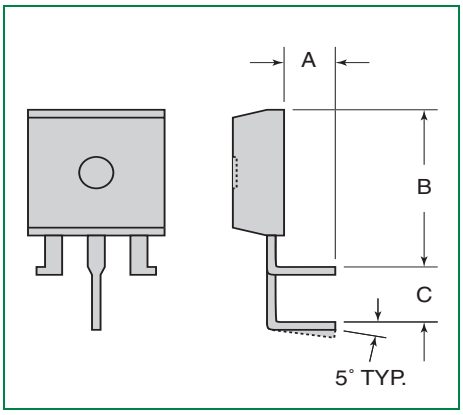

Dimension	Inches		Millimeters	
	Min	Max	Min	Max
A	0.172	0.202	4.37	5.13
B	0.440	0.460	11.18	11.68
C	0.120	0.130	3.05	3.30

 © 2006 Littelfuse, Inc. • Telecom Design Guide

Мы молодая и активно развивающаяся компания в области поставок электронных компонентов. Мы поставляем электронные компоненты отечественного и импортного производства напрямую от производителей и с крупнейших складов мира.

Благодаря сотрудничеству с мировыми поставщиками мы осуществляем комплексные и плановые поставки широчайшего спектра электронных компонентов.

Собственная эффективная логистика и склад в обеспечивает надежную поставку продукции в точно указанные сроки по всей России.

Мы осуществляем техническую поддержку нашим клиентам и предпродажную проверку качества продукции. На все поставляемые продукты мы предоставляем гарантию .

Осуществляем поставки продукции под контролем ВП МО РФ на предприятия военно-промышленного комплекса России , а также работаем в рамках 275 ФЗ с открытием отдельных счетов в уполномоченном банке. Система менеджмента качества компании соответствует требованиям ГОСТ ISO 9001.

Минимальные сроки поставки, гибкие цены, неограниченный ассортимент и индивидуальный подход к клиентам являются основой для выстраивания долгосрочного и эффективного сотрудничества с предприятиями радиоэлектронной промышленности, предприятиями ВПК и научно-исследовательскими институтами России.

С нами вы становитесь еще успешнее!

Наши контакты:

Телефон: +7 812 627 14 35

Электронная почта: sales@st-electron.ru

Адрес: 198099, Санкт-Петербург, Промышленная ул, дом № 19, литера Н, помещение 100-Н Офис 331