DALLAS SEMICONDUCTOR

DS1643
Nonvolatile Timekeeping RAM

FEATURES

- Form, fit, and function compatible with the MK48T08 Timekeeping RAM
- Integrated NV SRAM, real time clock, crystal, power–fail control circuit and lithium energy source
- Standard JEDEC bytewide 8K x 8 static RAM pinout
- Clock registers are accessed identical to the static RAM. These registers are resident in the eight top RAM locations.
- Totally nonvolatile with over 10 years of operation in the absence of power
- Access times of 120 ns and 150 ns
- Quartz accuracy ±1 minute a month @ 25°C, factory calibrated
- BCD coded year, month, date, day, hours, minutes, and seconds with leap year compensation valid up to 2100
- Power–fail write protection allows for ±10% V_{CC} power supply tolerance

ORDERING INFORMATION

DS1643–XXX 28–pin DIP module

–120 120 ns access
–150 150 ns access

PIN ASSIGNMENT

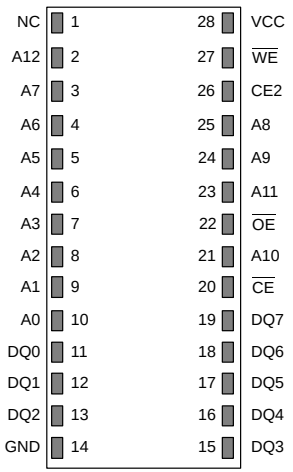

28–PIN ENCAPSULATED PACKAGE
(700 MIL EXTENDED)

DESCRIPTION

The DS1643 is an 8K x 8 nonvolatile static RAM with a full function real time clock which are both accessible in a bytewide format. The nonvolatile time keeping RAM is pin and function equivalent to any JEDEC standard 8K x 8 SRAM. The device can also be easily substituted in ROM, EPROM and EEPROM sockets providing read/write nonvolatility and the addition of the real time clock function. The real time clock information resides in the eight uppermost RAM locations. The RTC registers contain year, month, date, day, hours, minutes, and seconds data in 24 hour BCD format. Corrections for the day of the month and leap year are made automatically.

The RTC clock registers are double buffered to avoid access of incorrect data that can occur during clock update cycles. The double buffered system also prevents time loss as the timekeeping countdown continues unabated by access to time register data. The DS1643 also contains its own power–fail circuitry which deselects the device when the V_{CC} supply is in an out of tolerance condition. This feature prevents loss of data from unpredictable system operation brought on by low V_{CC} as errant access and update cycles are avoided.

©Copyright 1995 by Dallas Semiconductor Corporation.
All Rights Reserved. For important information regarding patents and other intellectual property rights, please refer to Dallas Semiconductor data books.

PIN DESCRIPTION

A0–A12	–	Address Input
$\overline{CE}$	–	Chip Enable
$\overline{OE}$	–	Output Enable
$\overline{WE}$	–	Write Enable
NC	–	No Connection
V_{CC}	–	+5 Volts
GND	–	Ground
DQ0-DQ7	–	Data Input/Output

CLOCK OPERATIONS–READING THE CLOCK

While the double buffered register structure reduces the chance of reading incorrect data, internal updates to the DS1643 clock registers should be halted before clock data is read to prevent reading of data in transition. However, halting the internal clock register updating process does not affect clock accuracy. Updating is halted when a one is written into the read bit, the seventh most significant bit in the control register. As long as a one remains in that position, updating is halted. After a halt is issued, the registers reflect the count, that is day, date, and time that was current at the moment the halt command was issued. However, the internal clock registers of the double buffered system continue to update so that the clock accuracy is not affected by the access of data. All of the DS1643 registers are updated simultaneously after the clock status is reset. Updating is within a second after the read bit is written to zero.

DS1643 BLOCK DIAGRAM Figure 1

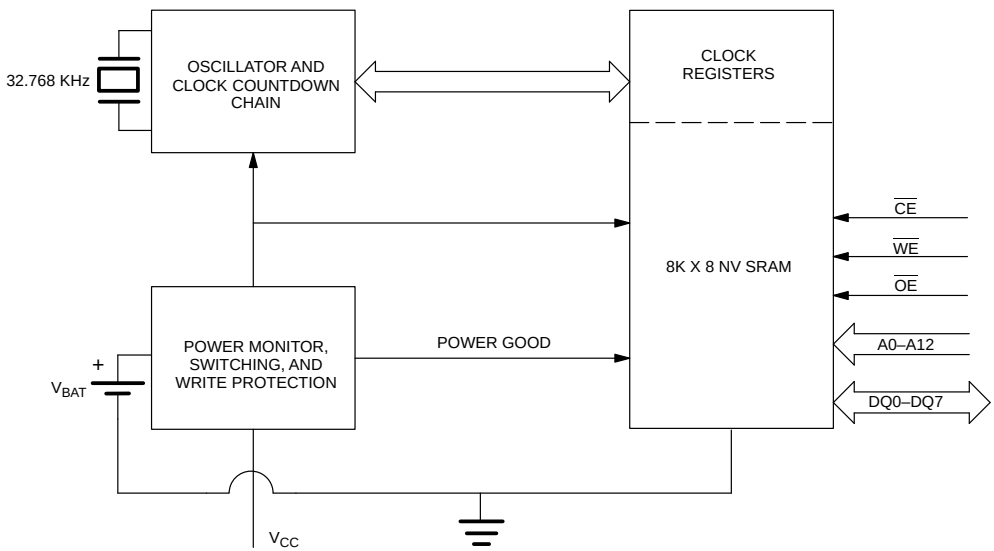

DS1643 TRUTH TABLE Table 1

V_{CC}	$\overline{CE}$	CE2	$\overline{OE}$	$\overline{WE}$	MODE	DQ	POWER
5 VOLTS ± 10%	V_{IH}	X	X	X	DESELECT	HIGH Z	STANDBY
	X	V_{IL}	X	X	DESELECT	HIGH Z	STANDBY
	V_{IL}	V_{IH}	X	V_{IL}	WRITE	DATA IN	ACTIVE
	V_{IL}	V_{IH}	V_{IL}	V_{IH}	READ	DATA OUT	ACTIVE
	V_{IL}	V_{IH}	V_{IH}	V_{IH}	READ	HIGH Z	ACTIVE
<4.5 VOLTS >V_{BAT}	X	X	X	X	DESELECT	HIGH Z	CMOS STANDBY
<V_{BAT}	X	X	X	X	DESELECT	HIGH Z	DATA RETENTION MODE

SETTING THE CLOCK

The 8–bit of the control register is the write bit. Setting the write bit to a one, like the read bit, halts updates to the DS1643 registers. The user can then load them with the correct day, date and time data in 24 hour BCD format. Resetting the write bit to a zero then transfers those values to the actual clock counters and allows normal operation to resume.

STOPPING AND STARTING THE CLOCK OSCILLATOR

The clock oscillator may be stopped at any time. To increase the shelf life, the oscillator can be turned off to minimize current drain from the battery. The $\overline{OSC}$ bit is the MSB for the seconds registers. Setting it to a 1 stops the oscillator.

FREQUENCY TEST BIT

Bit 6 of the day byte is the frequency test bit. When the frequency test bit is set to logic “1” and the oscillator is running, the LSB of the seconds register will toggle at 512 Hz. When the seconds register is being read, the DQ0 line will toggle at the 512 Hz frequency as long as conditions for access remain valid (i.e., $\overline{CE}$ low, $\overline{OE}$ low, CE2 high, and address for seconds register remain valid and stable).

CLOCK ACCURACY

The DS1643 is guaranteed to keep time accuracy to within ±1 minute per month at 25°C. The clock is calibrated at the factory by Dallas Semiconductor using special calibration nonvolatile tuning elements. The DS1643 does not require additional calibration and temperature deviations will have a negligible effect in most applications. For this reason, methods of field clock calibration are not available and not necessary. Attempts to calibrate the clock that may be used with similar device types (MK48T08 family) will not have any effect even though the DS1643 appears to accept calibration data.

DS1643 REGISTER MAP – BANK1 Table 2

ADDRESS	DATA								FUNCTION	
	B_7	B_6	B_5	B_4	B_3	B_2	B_1	B_0		
1FFF	–	–	–	–	–	–	–	–	YEAR	00–99
1FFE	X	X	X	–	–	–	–	–	MONTH	01–12
1FFD	X	X	–	–	–	–	–	–	DATE	01–31
1FFC	X	FT	X	X	X	–	–	–	DAY	01–07
1FFB	X	X	–	–	–	–	–	–	HOUR	00–23
1FFA	X	–	–	–	–	–	–	–	MINUTES	00–59
1FF9	$\overline{OSC}$	–	–	–	–	–	–	–	SECONDS	00–59
1FF8	W	R	X	X	X	X	X	X	CONTROL	A

$\overline{OSC}$ = STOP BIT R = READ BIT FT = FREQUENCY TEST
W = WRITE BIT X = UNUSED

NOTE:

All indicated “X” bits are not dedicated to any particular function and can be used as normal RAM bits.

RETRIEVING DATA FROM RAM OR CLOCK

The DS1643 is in the read mode whenever $\overline{WE}$ (write enable) is high and $\overline{CE}$ (chip enable) is low. The device architecture allows ripple-through access to any of the address locations in the NV SRAM. Valid data will be available at the DQ pins within t_{AA} after the last address input is stable, providing that the $\overline{CE}$ and $\overline{OE}$ access times and states are satisfied. If $\overline{CE}$ or $\overline{OE}$ access times are not met, valid data will be available at the latter of chip enable access (t_{CEA}) or at output enable access time (t_{OEA}). The state of the data input/output pins (DQ) is controlled by $\overline{CE}$ and $\overline{OE}$. If the outputs are activated before t_{AA}, the data lines are driven to an intermediate state until t_{AA}. If the address inputs are changed while $\overline{CE}$ and $\overline{OE}$ remain valid, output data will remain valid for output data hold time (t_{OH}) but will then go indeterminate until the next address access.

WRITING DATA TO RAM OR CLOCK

The DS1643 is in the write mode whenever $\overline{WE}$ and $\overline{CE}$ are in their active state. The start of a write is referenced to the latter occurring transition of $\overline{WE}$ or $\overline{CE}$. The addresses must be held valid throughout the cycle. $\overline{CE}$ or $\overline{WE}$ must return inactive for a minimum of t_{WR} prior to the initiation of another read or write cycle. Data in must be valid t_{DS} prior to the end of write and remain valid for t_{DH} afterward. In a typical application, the $\overline{OE}$ signal will be high during a write cycle. However, $\overline{OE}$ can be active provided that care is taken with the data bus to avoid bus contention. If $\overline{OE}$ is low prior to $\overline{WE}$ transitioning low the data bus can become active with read data defined by the address inputs. A low transition on $\overline{WE}$ will then disable the outputs t_{WEZ} after $\overline{WE}$ goes active.

DATA RETENTION MODE

When V_{CC} is within nominal limits (V_{CC} > 4.5 volts) the DS1643 can be accessed as described above by read or write cycles. However, when V_{CC} is below the power–fail point V_{PF} (point at which write protection occurs) the internal clock registers and RAM is blocked from access. This is accomplished internally by inhibiting access via the $\overline{CE}$ and CE2 signals. When V_{CC} falls below the level of the internal battery supply, power input is switched from the V_{CC} pin to the internal battery and clock activity, RAM, and clock data are maintained from the battery until V_{CC} is returned to nominal level.

INTERNAL BATTERY LONGEVITY

The DS1643 has a self contained lithium power source that is designed to provide energy for clock activity, and clock and RAM data retention when the V_{CC} supply is not present. The capability of this internal power supply is sufficient to power the DS1643 continuously for the life of the equipment in which it is installed. For specification purposes, the life expectancy is 10 years at 25°C with the internal clock oscillator running in the absence of V_{CC} power. The DS1643 is shipped from Dallas Semiconductor with the clock oscillator turned off, so the expected life should be considered to start from the time the clock oscillator is first turned on. Actual life expectancy of the DS1643 will be much longer than 10 years since no internal lithium battery energy is consumed when V_{CC} is present. In fact, in most applications, the life expectancy of the DS1643 will be approximately equal to the shelf life (expected useful life of the lithium battery with no load attached) of the lithium battery which may prove to be as long as 20 years.

ABSOLUTE MAXIMUM RATINGS*

Voltage on Any Pin Relative to Ground	–0.3V to +7.0V
Operating Temperature	0°C to 70°C
Storage Temperature	–20°C to +70°C
Soldering Temperature	260°C for 10 seconds (See Note 7)

* This is a stress rating only and functional operation of the device at these or any other conditions above those indicated in the operation sections of this specification is not implied. Exposure to absolute maximum rating conditions for extended periods of time may affect reliability.

RECOMMENDED DC OPERATING CONDITIONS (0°C to 70°C)

PARAMETER	SYMBOL	MIN	TYP	MAX	UNITS	NOTES
Supply Voltage	V_{CC}	4.5	5.0	5.5	V	1
Logic 1 Voltage All Inputs	V_{IH}	2.2		V_{CC}+0.3	V	
Logic 0 Voltage All Inputs	V_{IL}	–0.3		0.8	V	

DC ELECTRICAL CHARACTERISTICS (0°C $\leq t_A \leq$ 70°C; V_{CC} = 5.0V ± 10%)

PARAMETER	SYMBOL	MIN	TYP	MAX	UNITS	NOTES
Average V_{CC} Power Supply Current	I_{CC1}			65	mA	2, 3
TTL Standby Current ($\overline{CE}$ = V_{IH}, CE2 = V_{IL})	I_{CC2}		3	6	mA	2, 3
CMOS Standby Current ($\overline{CE}$=V_{CC}–0.2V, CE2=GND+0.2V)	I_{CC3}		2	4.0	mA	2, 3
Input Leakage Current (any input)	I_{IL}	–1		+1	µA	
Output Leakage Current	I_{OL}	–1		+1	µA	
Output Logic 1 Voltage (I_{OUT} = –1.0 mA)	V_{OH}	2.4			V	
Output Logic 0 Voltage (I_{OUT} = +2.1 mA)	V_{OL}			0.4	V	
Write Protection Voltage	V_{TP}	4.0	4.25	4.5	V	

AC ELECTRICAL CHARACTERISTICS

(0°C to 70°C; V_{CC} = 5.0V ± 10%)

PARAMETER	SYMBOL	DS1643–120 MIN	DS1643–120 MAX	DS1643–150 MIN	DS1643–150 MAX	UNITS	NOTES
Read Cycle Time	t_{RC}	120		150		ns	
Address Access Time	t_{AA}		120		150	ns	
$\overline{CE}$ and CE2 Access Time	t_{CEA}		120		150	ns	
$\overline{CE}$ and CE2 Data Off Time	t_{CEZ}		40		50	ns	
Output Enable Access Time	t_{OEA}		100		120	ns	
Output Enable Data Off Time	t_{OEZ}		35		45	ns	
Output Enable to DQ Low–Z	t_{OEL}	5		5		ns	
$\overline{CE}$ and CE2 to DQ Low–Z	t_{CEL}	5		5		ns	
Output Hold from Address	t_{OH}	5		5		ns	
Write Cycle Time	t_{WC}	120		150		ns	
Address Setup Time	t_{AS}	0		0		ns	
$\overline{CE}$ and CE2 Pulse Width	t_{CEW}	100		120		ns	
Address Hold from End of Write	t_{AH1} t_{AH2}	5 30		5 30		ns ns	5 6
Write Pulse Width	t_{WEW}	120		150		ns	
$\overline{WE}$ Data Off Time	t_{WEZ}		40		50	ns	
$\overline{WE}$ or $\overline{CE}$ Inactive Time	t_{WR}	10		10		ns	
Data Setup Time	t_{DS}	85		110		ns	
Data Hold Time High	t_{DH1} t_{DH2}	0 15		0 15		ns ns	5 6

AC TEST CONDITIONS

Input Levels: 0V to 3V
Transition Times: 5 ns

CAPACITANCE

(t_A = 25°C)

PARAMETER	SYMBOL	MIN	TYP	MAX	UNITS	NOTES
Capacitance on all pins (except DQ)	C_I			7	pF	
Capacitance on DQ pins	C_{DQ}			10	pF	

AC ELECTRICAL CHARACTERISTICS (POWER–UP/DOWN TIMING) (0°C to 70°C)

PARAMETER	SYMBOL	MIN	TYP	MAX	UNITS	NOTES
CE2, $\overline{CE}$ or $\overline{WE}$ at V_{IH} before Power Down	t_{PD}	0			µs	
V_{PF} (Max) to V_{PF} (Min) V_{CC} Fall Time	t_F	300			µs	
V_{PF} (Min) to V_{SO} V_{CC} Fall Time	t_{FB}	10			µs	
V_{SO} to V_{PF} (Min) V_{CC} Rise Time	t_{RB}	1			µs	
V_{PF} (Min) to V_{PF} (Max) V_{CC} Rise Time	t_R	0			µs	
Power–Up	t_{REC}	15	25	35	ms	
Expected Data Retention Time (Oscillator On)	t_{DR}	10			years	4

DS1643 READ CYCLE TIMING

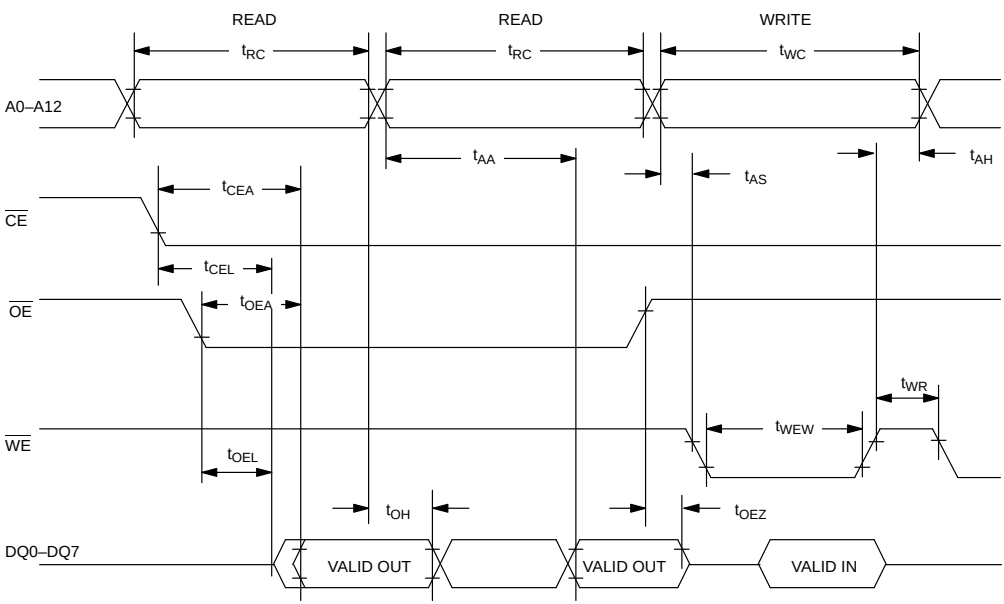

DS1643 WRITE CYCLE TIMING

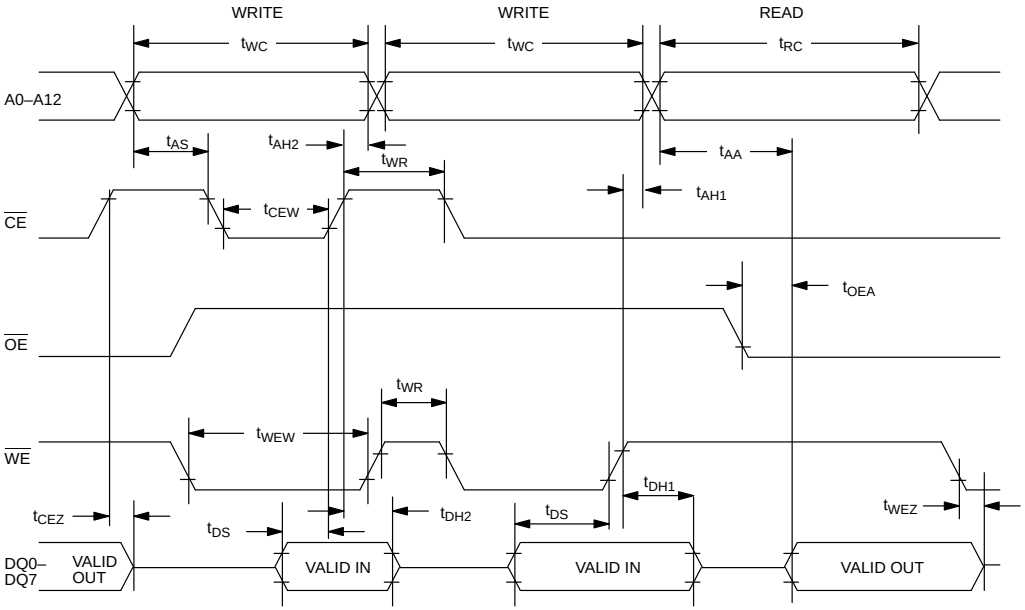

POWER–DOWN/POWER–UP TIMING

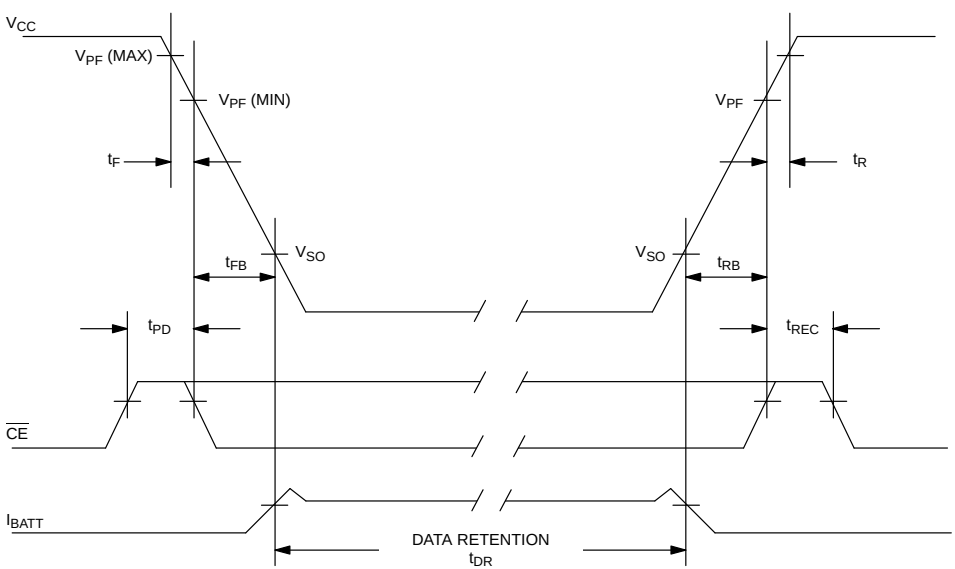

NOTES:

1. All voltages are referenced to ground.
2. Typical values are at 25°C and nominal supplies.
3. Outputs are open.
4. Data retention time is at 25°C and is calculated from the date code on the device package. The date code XXYY is the year followed by the week of the year in which the device was manufactured. For example, 9225, would mean the 25th week of 1992.
5. t_{AH1}, t_{DH1} are measured from $\overline{WE}$ going high.
6. t_{AH2}, t_{DH2} are measured from $\overline{CE}$ going high.
7. Real–Time Clock Modules can be successfully processed through conventional wave–soldering techniques as long as temperature exposure to the lithium energy source contained within does not exceed +85°C. Post solder cleaning with water washing techniques is acceptable, provided that ultrasonic vibration is not used.

OUTPUT LOAD

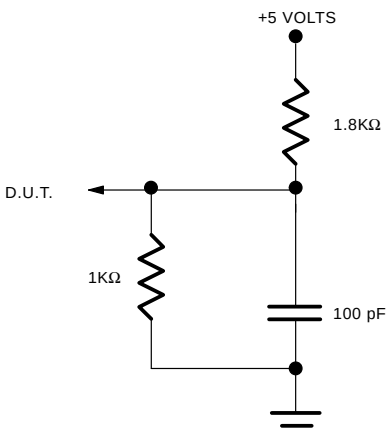

DS1643 28–PIN PACKAGE

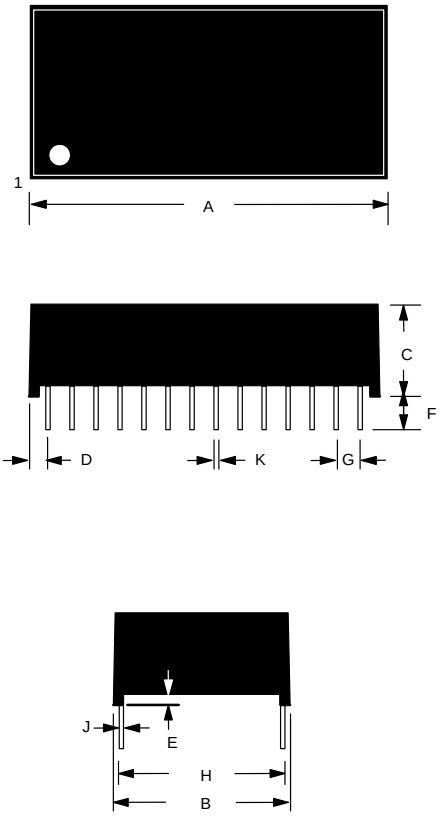

PKG	28–PIN	
DIM	MIN	MAX
A IN.	1.470	1.490
MM	37.34	37.85
B IN.	0.675	0.740
MM	17.75	18.80
C IN.	0.335	0.355
MM	8.51	9.02
D IN.	0.075	0.105
MM	1.91	2.67
E IN.	0.015	0.030
MM	0.38	0.76
F IN.	0.140	0.180
MM	3.56	4.57
G IN.	0.090	0.110
MM	2.29	2.79
H IN.	0.590	0.630
MM	14.99	16.00
J IN.	0.010	0.018
MM	0.25	0.45
K IN.	0.015	0.025
MM	0.43	0.58

Мы молодая и активно развивающаяся компания в области поставок электронных компонентов. Мы поставляем электронные компоненты отечественного и импортного производства напрямую от производителей и с крупнейших складов мира.

Благодаря сотрудничеству с мировыми поставщиками мы осуществляем комплексные и плановые поставки широчайшего спектра электронных компонентов.

Собственная эффективная логистика и склад в обеспечивает надежную поставку продукции в точно указанные сроки по всей России.

Мы осуществляем техническую поддержку нашим клиентам и предпродажную проверку качества продукции. На все поставляемые продукты мы предоставляем гарантию .

Осуществляем поставки продукции под контролем ВП МО РФ на предприятия военно-промышленного комплекса России , а также работаем в рамках 275 ФЗ с открытием отдельных счетов в уполномоченном банке. Система менеджмента качества компании соответствует требованиям ГОСТ ISO 9001.

Минимальные сроки поставки, гибкие цены, неограниченный ассортимент и индивидуальный подход к клиентам являются основой для выстраивания долгосрочного и эффективного сотрудничества с предприятиями радиоэлектронной промышленности, предприятиями ВПК и научно-исследовательскими институтами России.

С нами вы становитесь еще успешнее!

Наши контакты:

Телефон: +7 812 627 14 35

Электронная почта: sales@st-electron.ru

Адрес: 198099, Санкт-Петербург, Промышленная ул, дом № 19, литера Н, помещение 100-Н Офис 331