AT91SAM ARM-based Embedded MPU

SAM9G45

DATASHEET

Description

The ARM926EJ-S based SAM9G45 features the frequently demanded combination of user interface functionality and high data rate connectivity, including LCD Controller, resistive touch-screen, camera interface, audio, Ethernet 10/100 and high speed USB and SDIO. With the processor running at 400 MHz and multiple 100+ Mbps data rate peripherals, the SAM9G45 has the performance and bandwidth to the network or local storage media to provide an adequate user experience.

The SAM9G45 supports DDR2 and NAND Flash memory interfaces for program and data storage. An internal 133 MHz multi-layer bus architecture associated with 37 DMA channels, a dual external bus interface and distributed memory including a 64-Kbyte SRAM which can be configured as a tightly coupled memory (TCM) sustains the high bandwidth required by the processor and the high speed peripherals.

The I/Os support 1.8V or 3.3V operation, which are independently configurable for the memory interface and peripheral I/Os. This feature completely eliminates the need for any external level shifters. In addition it supports 0.8 ball pitch package for low cost PCB manufacturing.

The SAM9G45 power management controller features efficient clock gating and a battery backup section minimizing power consumption in active and standby modes.

1. Features

- **400 MHz ARM926EJ-S™ ARM® Thumb® Processor**
  - **32 Kbytes Data Cache, 32 Kbytes Instruction Cache, MMU**
- **Memories**
  - **DDR2 Controller 4-bank DDR2/LPDDR, SDRAM/LPSDR**
  - **External Bus Interface supporting 4-bank DDR2/LPDDR, SDRAM/LPSDR, Static Memories, CompactFlash, SLC NAND Flash with ECC**
  - **One 64-Kbyte internal SRAM, single-cycle access at system speed or processor speed through TCM interface**
  - **One 64-Kbyte internal ROM, embedding bootstrap routine**
- **Peripherals**
  - **LCD Controller supporting STN and TFT displays up to 1280*860**
  - **ITU-R BT. 601/656 Image Sensor Interface**
  - **USB Device High Speed, USB Host High Speed and USB Host Full Speed with On-Chip Transceiver**
  - **10/100 Mbps Ethernet MAC Controller**
  - **Two High Speed Memory Card Hosts (SDIO, SDCard, MMC)**
  - **AC'97 controller**
  - **Two Master/Slave Serial Peripheral Interfaces**
  - **Two Three-channel 16-bit Timer/Counters**
  - **Two Synchronous Serial Controllers (I2S mode)**
  - **Four-channel 16-bit PWM Controller**
  - **Two Two-wire Interfaces**
  - **Four USARTs with ISO7816, IrDA, Manchester and SPI modes**
  - **8-channel 10-bit ADC with 4-wire Touch Screen support**
  - **Write Protected Registers**
- **System**
  - **133 MHz twelve 32-bit layer AHB Bus Matrix**
  - **37 DMA Channels**
  - **Boot from NAND Flash, SDCard, DataFlash® or serial DataFlash**
  - **Reset Controller with on-chip Power-on Reset**
  - **Selectable 32768 Hz Low-power and 12 MHz Crystal Oscillators**
  - **Internal Low-power 32 kHz RC Oscillator**
  - **One PLL for the system and one 480 MHz PLL optimized for USB High Speed**
  - **Two Programmable External Clock Signals**
  - **Advanced Interrupt Controller and Debug Unit**
  - **Periodic Interval Timer, Watchdog Timer, Real Time Timer and Real Time Clock**
- **I/O**
  - **Five 32-bit Parallel Input/Output Controllers**
  - **160 Programmable I/O Lines Multiplexed with up to Two Peripheral I/Os with Schmitt trigger input**
- **Package**
  - **324-ball TFBGA, pitch 0.8 mm**

2. Block Diagram

Figure 2-1. SAM9G45 Block Diagram

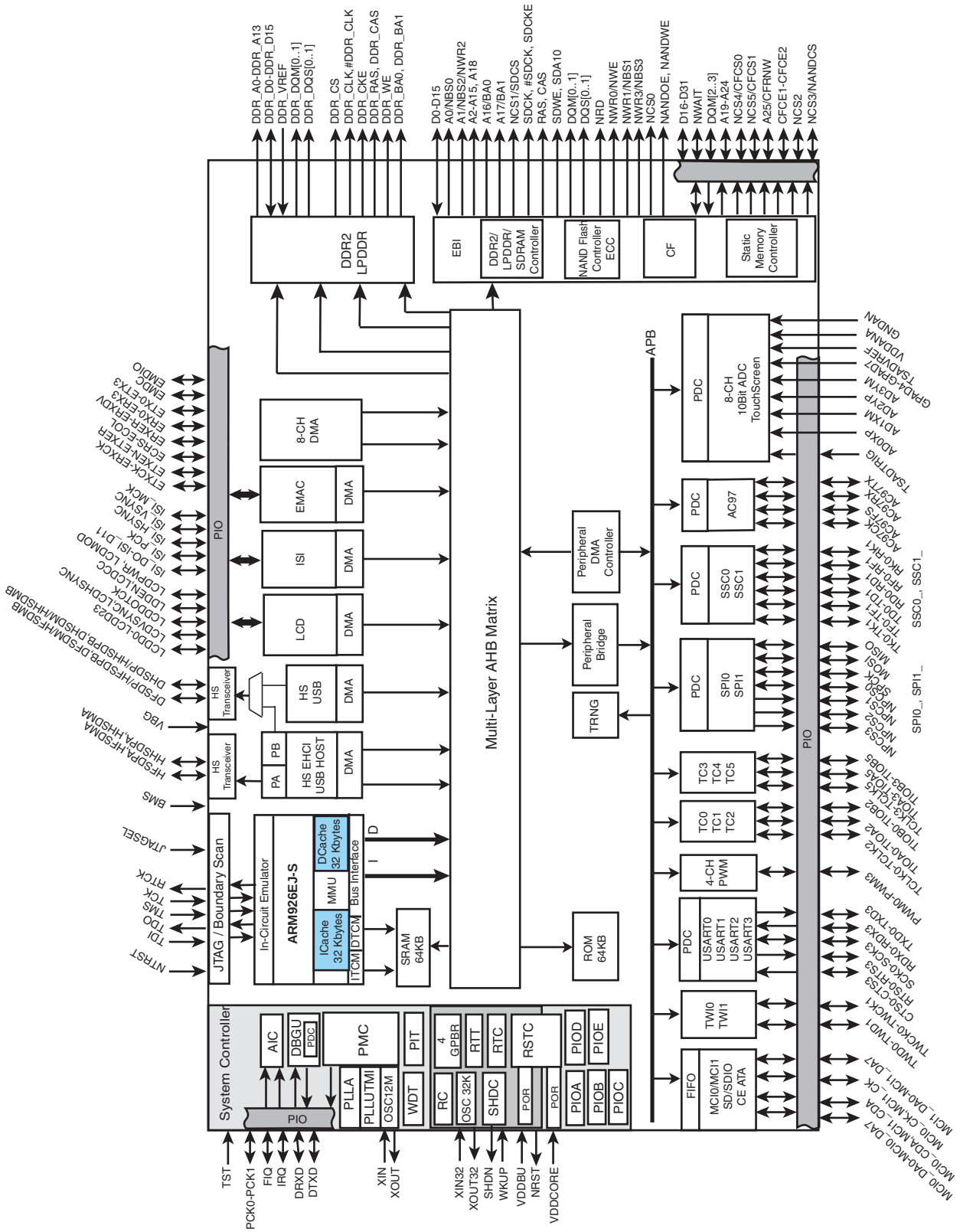

3. Signal Description

Table 3-1 gives details on the signal names classified by peripheral.

Table 3-1. Signal Description List

Signal Name	Function	Type	Active Level	Reference Voltage	Comments
Power Supplies					
VDDIOM0	DDR2 I/O Lines Power Supply	Power			1.65V to 1.95V
VDDIOM1	EBI I/O Lines Power Supply	Power			1.65V to 1.95V or 3.0V to3.6V
VDDIOP0	Peripherals I/O Lines Power Supply	Power			1.65V to 3.6V
VDDIOP1	Peripherals I/O Lines Power Supply	Power			1.65V to 3.6V
VDDIOP2	ISI I/O Lines Power Supply	Power			1.65V to 3.6V
VDDBU	Backup I/O Lines Power Supply	Power			1.8V to 3.6V
VDDANA	Analog Power Supply	Power			3.0V to 3.6V
VDDPLLA	PLLA Power Supply	Power			0.9V to 1.1V
VDDPLLUTMI	PLLUTMI Power Supply	Power			0.9V to 1.1V
VDDOSC	Oscillator Power Supply	Power			1.65V to 3.6V
VDDCORE	Core Chip Power Supply	Power			0.9V to 1.1V
VDDUTMIC	UDPHS and UHPHS UTMI+ Core Power Supply	Power			0.9V to 1.1V
VDDUTMII	UDPHS and UHPHS UTMI+ interface Power Supply	Power			3.0V to 3.6V
GNDIOM	DDR2 and EBI I/O Lines Ground	Ground			
GNDIOP	Peripherals and ISI I/O lines Ground	Ground			
GNDCORE	Core Chip Ground	Ground			
GNDOSC	PLLA, PLLUTMI and Oscillator Ground	Ground			
GNDBU	Backup Ground	Ground			
GNDUTMI	UDPHS and UHPHS UTMI+ Core and interface Ground	Ground			
GNDANA	Analog Ground	Ground			
Clocks, Oscillators and PLLs					
XIN	Main Oscillator Input	Input			
XOUT	Main Oscillator Output	Output			
XIN32	Slow Clock Oscillator Input	Input			
XOUT32	Slow Clock Oscillator Output	Output			
VBG	Bias Voltage Reference for USB	Analog			
PCK0 - PCK1	Programmable Clock Output	Output		(1)	

Table 3-1. Signal Description List (Continued)

Signal Name	Function	Type	Active Level	Reference Voltage	Comments
Shutdown, Wakeup Logic					
SHDN	Shut-Down Control	Output		VDDBU	Driven at 0V only. 0: The device is in backup mode 1: The device is running (not in backup mode).
WKUP	Wake-Up Input	Input		VDDBU	Accept between 0V and VDDBU.
ICE and JTAG					
TCK	Test Clock	Input		VDDIOP0	No pull-up resistor, Schmitt trigger
TDI	Test Data In	Input		VDDIOP0	No pull-up resistor, Schmitt trigger
TDO	Test Data Out	Output		VDDIOP0	
TMS	Test Mode Select	Input		VDDIOP0	No pull-up resistor, Schmitt trigger
JTAGSEL	JTAG Selection	Input		VDDBU	Pull-down resistor (15 kΩ).
RTCK	Return Test Clock	Output		VDDIOP0	
Reset/Test					
NRST	Microcontroller Reset [(2)]	I/O	Low	VDDIOP0	Open drain output. Pull-Up resistor (100 kΩ), Schmitt trigger
TST	Test Mode Select	Input		VDDBU	Pull-down resistor (15 kΩ), Schmitt trigger
NTRST	Test Reset Signal	Input		VDDIOP0	Pull-Up resistor (100 kΩ), Schmitt trigger.
BMS	Boot Mode Select	**Input**		VDDIOP0	Must be connected to GND or VDDIOP0.
Debug Unit - DBGU					
DRXD	Debug Receive Data	Input		[(1)]	
DTXD	Debug Transmit Data	Output		[(1)]	
Advanced Interrupt Controller - AIC					
IRQ	External Interrupt Input	Input		[(1)]	
FIQ	Fast Interrupt Input	Input		[(1)]	
PIO Controller - PIOA- PIOB - PIOC - PIOD - PIOE					
PA0 - PA31	Parallel IO Controller A	I/O		[(1)]	Pulled-up input at reset (100kΩ)[(3)], Schmitt trigger
PB0 - PB31	Parallel IO Controller B	I/O		[(1)]	Pulled-up input at reset (100kΩ)[(3)], Schmitt trigger
PC0 - PC31	Parallel IO Controller C	I/O		[(1)]	Pulled-up input at reset (100kΩ)[(3)], Schmitt trigger

Table 3-1. Signal Description List (Continued)

Signal Name	Function	Type	Active Level	Reference Voltage	Comments
PD0 - PD31	Parallel IO Controller D	I/O		(1)	Pulled-up input at reset (100kΩ)(3), Schmitt trigger
PE0 - PE31	Parallel IO Controller E	I/O		(1)	Pulled-up input at reset (100kΩ)(3), Schmitt trigger
DDR Memory Interface- DDR2/SDRAM/LPDDR Controller					
DDR_D0 - DDR_D15	Data Bus	I/O		VDDIOM0	Pulled-up input at reset
DDR_A0 - DDR_A13	Address Bus	Output		VDDIOM0	0 at reset
DDR_CLK- #DDR_CLK	DDR differential clock input	Output		VDDIOM0	
DDR_CKE	DDR Clock Enable	Output	High	VDDIOM0	
DDR_CS	DDR Chip Select	Output	Low	VDDIOM0	
DDR_WE	DDR Write Enable	Output	Low	VDDIOM0	
DDR_RAS- DDR_CAS	Row and Column Signal	Output	Low	VDDIOM0	
DDR_DQM[0..1]	Write Data Mask	Output		VDDIOM0	
DDR_DQS[0..1]	Data Strobe	Output		VDDIOM0	
DDR_BA0 - DDR_BA1	Bank Select	Output		VDDIOM0	
DDR_VREF	Reference Voltage	Input		VDDIOM0	
External Bus Interface - EBI					
D0 -D31	Data Bus	I/O		VDDIOM1	Pulled-up input at reset
A0 - A25	Address Bus	Output		VDDIOM1	0 at reset
NWAIT	External Wait Signal	Input	Low	VDDIOM1	
Static Memory Controller - SMC					
NCS0 - NCS5	Chip Select Lines	Output	Low	VDDIOM1	
NWR0 - NWR3	Write Signal	Output	Low	VDDIOM1	
NRD	Read Signal	Output	Low	VDDIOM1	
NWE	Write Enable	Output	Low	VDDIOM1	
NBS0 - NBS3	Byte Mask Signal	Output	Low	VDDIOM1	
CompactFlash Support					
CFCE1 - CFCE2	CompactFlash Chip Enable	Output	Low	VDDIOM1	
CFOE	CompactFlash Output Enable	Output	Low	VDDIOM1	
CFWE	CompactFlash Write Enable	Output	Low	VDDIOM1	
CFIOR	CompactFlash IO Read	Output	Low	VDDIOM1	
CFIOW	CompactFlash IO Write	Output	Low	VDDIOM1	
CFRNW	CompactFlash Read Not Write	Output		VDDIOM1	
CFCS0 -CFCS1	CompactFlash Chip Select Lines	Output	Low	VDDIOM1	

Table 3-1. Signal Description List (Continued)

Signal Name	Function	Type	Active Level	Reference Voltage	Comments
NAND Flash Support					
NANDCS	NAND Flash Chip Select	Output	Low	VDDIOM1	
NANDOE	NAND Flash Output Enable	Output	Low	VDDIOM1	
NANDWE	NAND Flash Write Enable	Output	Low	VDDIOM1	
DDR2/SDRAM/LPDDR Controller					
SDCK,#SDCK	DDR2/SDRAM differential clock	Output		VDDIOM1	
SDCKE	DDR2/SDRAM Clock Enable	Output	High	VDDIOM1	
SDCS	DDR2/SDRAM Controller Chip Select	Output	Low	VDDIOM1	
BA0 - BA1	Bank Select	Output		VDDIOM1	
SDWE	DDR2/SDRAM Write Enable	Output	Low	VDDIOM1	
RAS - CAS	Row and Column Signal	Output	Low	VDDIOM1	
SDA10	SDRAM Address 10 Line	Output		VDDIOM1	
DQS[0..1]	Data Strobe	Output		VDDIOM1	
DQM[0..3]	Write Data Mask	Output		VDDIOM1	
High Speed Multimedia Card Interface - HSMCIx					
MCIx_CK	Multimedia Card Clock	I/O		(1)	
MCIx_CDA	Multimedia Card Slot A Command	I/O		(1)	
MCIx_DA0 - MCIx_DA7	Multimedia Card Slot A Data	I/O		(1)	
Universal Synchronous Asynchronous Receiver Transmitter - USARTx					
SCKx	USARTx Serial Clock	I/O		(1)	
TXDx	USARTx Transmit Data	Output		(1)	
RXDx	USARTx Receive Data	Input		(1)	
RTSx	USARTx Request To Send	Output		(1)	
CTSx	USARTx Clear To Send	Input		(1)	
Synchronous Serial Controller - SSCx					
TDx	SSC Transmit Data	Output		(1)	
RDx	SSC Receive Data	Input		(1)	
TKx	SSC Transmit Clock	I/O		(1)	
RKx	SSC Receive Clock	I/O		(1)	
TFx	SSC Transmit Frame Sync	I/O		(1)	
RFx	SSC Receive Frame Sync	I/O		(1)	

Table 3-1. Signal Description List (Continued)

Signal Name	Function	Type	Active Level	Reference Voltage	Comments
AC97 Controller - AC97C					
AC97RX	AC97 Receive Signal	Input		(1)	
AC97TX	AC97 Transmit Signal	Output		(1)	
AC97FS	AC97 Frame Synchronization Signal	Output		(1)	
AC97CK	AC97 Clock signal	Input		(1)	
Time Counter - TCx					
TCLKx	TC Channel x External Clock Input	Input		(1)	
TIOAx	TC Channel x I/O Line A	I/O		(1)	
TIOBx	TC Channel x I/O Line B	I/O		(1)	
Pulse Width Modulation Controller - PWM					
PWMx	Pulse Width Modulation Output	Output		(1)	
Serial Peripheral Interface - SPIx_					
SPIx_MISO	Master In Slave Out	I/O		(1)	
SPIx_MOSI	Master Out Slave In	I/O		(1)	
SPIx_SPCK	SPI Serial Clock	I/O		(1)	
SPIx_NPCS0	SPI Peripheral Chip Select 0	I/O	Low	(1)	
SPIx_NPCS1-SPIx_NPCS3	SPI Peripheral Chip Select	Output	Low	(1)	
Two-Wire Interface					
TWDx	Two-wire Serial Data	I/O		(1)	
TWCKx	Two-wire Serial Clock	I/O		(1)	
USB Host High Speed Port - UHPHS					
HFSDPA	USB Host Port A Full Speed Data +	Analog		VDDUTMII	
HFSDMA	USB Host Port A Full Speed Data -	Analog		VDDUTMII	
HHSDPA	USB Host Port A High Speed Data +	Analog		VDDUTMII	
HHSDMA	USB Host Port A High Speed Data -	Analog		VDDUTMII	
HFSDPB	USB Host Port B Full Speed Data +	Analog		VDDUTMII	Multiplexed with DFSDP
HFSDMB	USB Host Port B Full Speed Data -	Analog		VDDUTMII	Multiplexed with DFSDM
HHSDPB	USB Host Port B High Speed Data +	Analog		VDDUTMII	Multiplexed with DHSDP
HHSDMB	USB Host Port B High Speed Data -	Analog		VDDUTMII	Multiplexed with DHSDM
USB Device High Speed Port - UDPHS					
DFSDM	USB Device Full Speed Data -	Analog		VDDUTMII	
DFSDP	USB Device Full Speed Data +	Analog		VDDUTMII	
DHSDM	USB Device High Speed Data -	Analog		VDDUTMII	
DHSDP	USB Device High Speed Data +	Analog		VDDUTMII	

Table 3-1. Signal Description List (Continued)

Signal Name	Function	Type	Active Level	Reference Voltage	Comments
Ethernet 10/100					
ETXCK	Transmit Clock or Reference Clock	Input		(1)	MII only, REFCK in RMII
ERXCK	Receive Clock	Input		(1)	MII only
ETXEN	Transmit Enable	Output		(1)	
ETX0-ETX3	Transmit Data	Output		(1)	ETX0-ETX1 only in RMII
ETXER	Transmit Coding Error	Output		(1)	MII only
ERXDV	Receive Data Valid	Input		(1)	RXDV in MII, CRSDV in RMII
ERX0-ERX3	Receive Data	Input		(1)	ERX0-ERX1 only in RMII
ERXER	Receive Error	Input		(1)	
ECRS	Carrier Sense and Data Valid	Input		(1)	MII only
ECOL	Collision Detect	Input		(1)	MII only
EMDC	Management Data Clock	Output		(1)	
EMDIO	Management Data Input/Output	I/O		(1)	
Image Sensor Interface					
ISI_D0-ISI_D11	Image Sensor Data	Input		VDDIOP2	
ISI_MCK	Image sensor Reference clock	output		VDDIOP2	
ISI_HSYNC	Image Sensor Horizontal Synchro	input		VDDIOP2	
ISI_VSYNC	Image Sensor Vertical Synchro	input		VDDIOP2	
ISI_PCK	Image Sensor Data clock	input		VDDIOP2	
LCD Controller - LCDC					
LCDD0 - LCDD23	LCD Data Bus	Output		VDDIOP1	
LCDVSYNC	LCD Vertical Synchronization	Output		VDDIOP1	
LCDHSYNC	LCD Horizontal Synchronization	Output		VDDIOP1	
LCDDOTCK	LCD Dot Clock	Output		VDDIOP1	
LCDDEN	LCD Data Enable	Output		VDDIOP1	
LCDCC	LCD Contrast Control	Output		VDDIOP1	
LCDPWR	LCD panel Power enable control	Output		VDDIOP1	
LCDMOD	LCD Modulation signal	Output		VDDIOP1	
Touch Screen Analog-to-Digital Converter					
$AD0X_P$	Analog input channel 0 or Touch Screen Top channel	Analog		VDDANA	Multiplexed with AD0
$AD1X_M$	Analog input channel 1 or Touch Screen Bottom channel	Analog		VDDANA	Multiplexed with AD1
$AD2Y_P$	Analog input channel 2 or Touch Screen Right channel	Analog		VDDANA	Multiplexed with AD2
$AD3Y_M$	Analog input channel 3 or Touch Screen Left channel	Analog		VDDANA	Multiplexed with AD3

Table 3-1. Signal Description List (Continued)

Signal Name	Function	Type	Active Level	Reference Voltage	Comments
GPAD4-GPAD7	Analog Inputs	Analog		VDDANA	
TSADTRG	ADC Trigger	Input		VDDANA	
TSADVREF	ADC Reference	Analog		VDDANA	

Notes:
1. Refer to peripheral multiplexing tables in Section 8.4 “Peripheral Signals Multiplexing on I/O Lines” for these signals.
2. When configured as an input, the NRST pin enables asynchronous reset of the device when asserted low. This allows connection of a simple push button on the NRST pin as a system-user reset.
3. Programming of this pull-up resistor is performed independently for each I/O line through the PIO Controllers. After reset, all the I/O lines default as inputs with pull-up resistors enabled, except those which are multiplexed with the External Bus Interface signals that require to be enabled as Peripheral at reset. This is explicitly indicated in the column “Reset State” of the peripheral multiplexing tables.

4. Package and Pinout

The SAM9G45 is delivered in a 324-ball TFBGA package.

4.1 Mechanical Overview of the 324-ball TFBGA Package

Figure 4-1 shows the orientation of the 324-ball TFBGA Package

Figure 4-1. Orientation of the 324-ball TFBGA Package

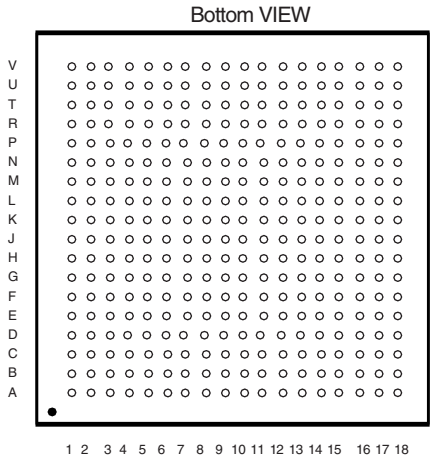

4.2 324-ball TFBGA Package Pinout

Table 4-1. SAM9G45 Pinout for 324-ball BGA Package

Pin	Signal Name	Pin	Signal Name	Pin	Signal Name	Pin	Signal Name
A1	PC27	E10	NANDWE	K1	PE21	P10	TMS
A2	PC28	E11	DQS1	K2	PE23	P11	VDDPLLA
A3	PC25	E12	D13	K3	PE26	P12	PB20
A4	PC20	E13	D11	K4	PE22	P13	PB31
A5	PC12	E14	A4	K5	PE24	P14	DDR_D7
A6	PC7	E15	A8	K6	PE25	P15	DDR_D3
A7	PC5	E16	A9	K7	PE27	P16	DDR_D4
A8	PC0	E17	A7	K8	PE28	P17	DDR_D5
A9	NWR3/NBS3	E18	VDDCORE	K9	VDDIOP0	P18	DDR_D10
A10	NCS0	F1	PD22	K10	VDDIOP0	R1	PA18
A11	DQS0	F2	PD24	K11	GNDIOM	R2	PA20
A12	RAS	F3	SHDN	K12	GNDIOM	R3	PA24
A13	SDCK	F4	PE1	K13	VDDIOM0	R4	PA30
A14	NSDCK	F5	PE3	K14	DDR_A7	R5	PB4
A15	D7	F6	VDDIOM1	K15	DDR_A8	R6	PB13
A16	DDR_VREF	F7	PC19	K16	DDR_A9	R7	PD0
A17	D0	F8	PC14	K17	DDR_A11	R8	PD9
A18	A14	F9	PC4	K18	DDR_A10	R9	PD18
B1	PC31	F10	NCS1/SDCS	L1	PA0	R10	TDI
B2	PC29	F11	NRD	L2	PE30	R11	RTCK
B3	PC30	F12	SDWE	L3	PE29	R12	PB22
B4	PC22	F13	A0/NBS0	L4	PE31	R13	PB29
B5	PC17	F14	A1/NBS2/NWR2	L5	PA2	R14	DDR_D6
B6	PC10	F15	A3	L6	PA4	R15	DDR_D1
B7	PC11	F16	A6	L7	PA8	R16	DDR_D0
B8	PC2	F17	A5	L8	PD2	R17	HHSDMA
B9	SDA10	F18	A2	L9	PD13	R18	HFSDMA
B10	A17/BA1	G1	PD25	L10	PD29	T1	PA22
B11	DQM0	G2	PD23	L11	PD31	T2	PA25
B12	SDCKE	G3	PE6	L12	VDDIOM0	T3	PA26
B13	D12	G4	PE0	L13	VDDIOM0	T4	PB0
B14	D8	G5	PE2	L14	DDR_A1	T5	PB6
B15	D4	G6	PE8	L15	DDR_A3	T6	PB16
B16	D3	G7	PE4	L16	DDR_A4	T7	PD1
B17	A15	G8	PE11	L17	DDR_A6	T8	PD11
B18	A13	G9	GNDCORE	L18	DDR_A5	T9	PD19
C1	XIN32	G10	VDDIOM1	M1	PA1	T10	PD30
C2	GNDANA	G11	VDDIOM1	M2	PA5	T11	BMS
C3	WKUP	G12	VDDCORE	M3	PA6	T12	PB8
C4	PC26	G13	VDDCORE	M4	PA7	T13	PB30
C5	PC21	G14	DDR_DQM0	M5	PA10	T14	DDR_D2
C6	PC15	G15	DDR_DQS1	M6	PA14	T15	PB21
C7	PC9	G16	DDR_BA1	M7	PB14	T16	PB23
C8	PC3	G17	DDR_BA0	M8	PD4	T17	HHSDPA
C9	NWR0/NWE	G18	DDR_DQS0	M9	PD15	T18	HFSDPA
C10	A16/BA0	H1	PD26	M10	NRST	U1	PA27
C11	CAS	H2	PD27	M11	PB11	U2	PA29
C12	D15	H3	VDDIOP1	M12	PB25	U3	PA28
C13	D10	H4	PE13	M13	PB27	U4	PB3
C14	D6	H5	PE5	M14	VDDIOM0	U5	PB7

Table 4-1. SAM9G45 Pinout for 324-ball BGA Package (Continued)

Pin	Signal Name	Pin	Signal Name	Pin	Signal Name	Pin	Signal Name
C15	D2	H6	PE7	M15	DDR_D14	U6	PB17
C16	GNDIOM	H7	PE9	M16	DDR_D15	U7	PD7
C17	A18	H8	PE10	M17	DDR_A0	U8	PD10
C18	A12	H9	GNDCORE	M18	DDR_A2	U9	PD14
D1	XOUT32	H10	GNDIOP	N1	PA3	U10	TCK
D2	PD20	H11	VDDCORE	N2	PA9	U11	VDDOSC
D3	GNDBU	H12	GNDIOM	N3	PA12	U12	GNDOSC
D4	VDDBU	H13	GNDIOM	N4	PA15	U13	PB10
D5	PC24	H14	DDR_CS	N5	PA16	U14	PB26
D6	PC18	H15	DDR_WE	N6	PA17	U15	HHSDPB/DHSDP
D7	PC13	H16	DDR_DQM1	N7	PB18	U16	HHSDMB/DHSDM
D8	PC6	H17	DDR_CAS	N8	PD6	U17	GNDUTMI
D9	NWR1/NBS1	H18	DDR_NCLK	N9	PD16	U18	VDDUTMIC
D10	NANDOE	J1	PE19	N10	NTRST	V1	PA31
D11	DQM1	J2	PE16	N11	PB9	V2	PB1
D12	D14	J3	PE14	N12	PB24	V3	PB2
D13	D9	J4	PE15	N13	PB28	V4	PB5
D14	D5	J5	PE12	N14	DDR_D13	V5	PB15
D15	D1	J6	PE17	N15	DDR_D8	V6	PD3
D16	VDDIOM1	J7	PE18	N16	DDR_D9	V7	PD5
D17	A11	J8	PE20	N17	DDR_D11	V8	PD12
D18	A10	J9	GNDCORE	N18	DDR_D12	V9	PD17
E1	PD21	J10	GNDCORE	P1	PA11	V10	TDO
E2	TSADVREF	J11	GNDIOP	P2	PA13	V11	XOUT
E3	VDDANA	J12	GNDIOM	P3	PA19	V12	XIN
E4	JTAGSEL	J13	GNDIOM	P4	PA21	V13	VDDPLLUTMI
E5	TST	J14	DDR_A12	P5	PA23	V14	VDDIOP2
E6	PC23	J15	DDR_A13	P6	PB12	V15	HFSDPB/DFSDP
E7	PC16	J16	DDR_CKE	P7	PB19	V16	HFSDMB/DFSDM
E8	PC8	J17	DDR_RAS	P8	PD8	V17	VDDUTMII
E9	PC1	J18	DDR_CLK	P9	PD28	V18	VBG

5. Power Considerations

5.1 Power Supplies

The SAM9G45 has several types of power supply pins:

- VDDCORE pins: Power the core, including the processor, the embedded memories and the peripherals; voltage ranges from 0.9V to 1.1V, 1.0V typical.
- VDDIOM0 pins: Power the DDR2/LPDDR I/O lines; voltage ranges between 1.65V and 1.95V (1.8V typical).
- VDDIOM1 pins: Power the External Bus Interface 1 I/O lines; voltage ranges between 1.65V and 1.95V (1.8V typical) or between 3.0V and 3.6V (3.3V typical).
- VDDIOP0, VDDIOP1, VDDIOP2 pins: Power the Peripherals I/O lines; voltage ranges from 1.65V to 3.6V.
- VDDBU pin: Powers the Slow Clock oscillator, the internal RC oscillator and a part of the System Controller; voltage ranges from 1.8V to 3.6V.
- VDDPLLUTMI pin: Powers the PLLUTMI cell; voltage range from 0.9V to 1.1V.
- VDDUTMIC pin: Powers the USB device and host UTMI+ core; voltage range from 0.9V to 1.1V, 1.0V typical.
- VDDUTMII pin: Powers the USB device and host UTMI+ interface; voltage range from 3.0V to 3.6V, 3.3V typical.
- VDDPLLA pin: Powers the PLLA cell; voltage ranges from 0.9V to 1.1V.
- VDDOSC pin: Powers the Main Oscillator cells; voltage ranges from 1.65V to 3.6V
- VDDANA pin: Powers the Analog to Digital Converter; voltage ranges from 3.0V to 3.6V, 3.3V typical.

Some supply pins share common ground (GND) pins whereas others have separate grounds.

The respective power/ground pin assignments are as follows:

VDDCORE	GNDCORE
VDDIOM0, VDDIOM1	GNDIOM
VDDIOP0, VDDIOP1, VDDIOP2	GNDIOP
VDDBU	GNDBU
VDDUTMIC, VDDUTMII	GNDUTMI
VDDPLLUTMI, VDDPLLA, VDDOSC,	GNDOSC
VDDANA	GNDANA

6. Memories

Figure 6-1. SAM9G45 Memory Mapping

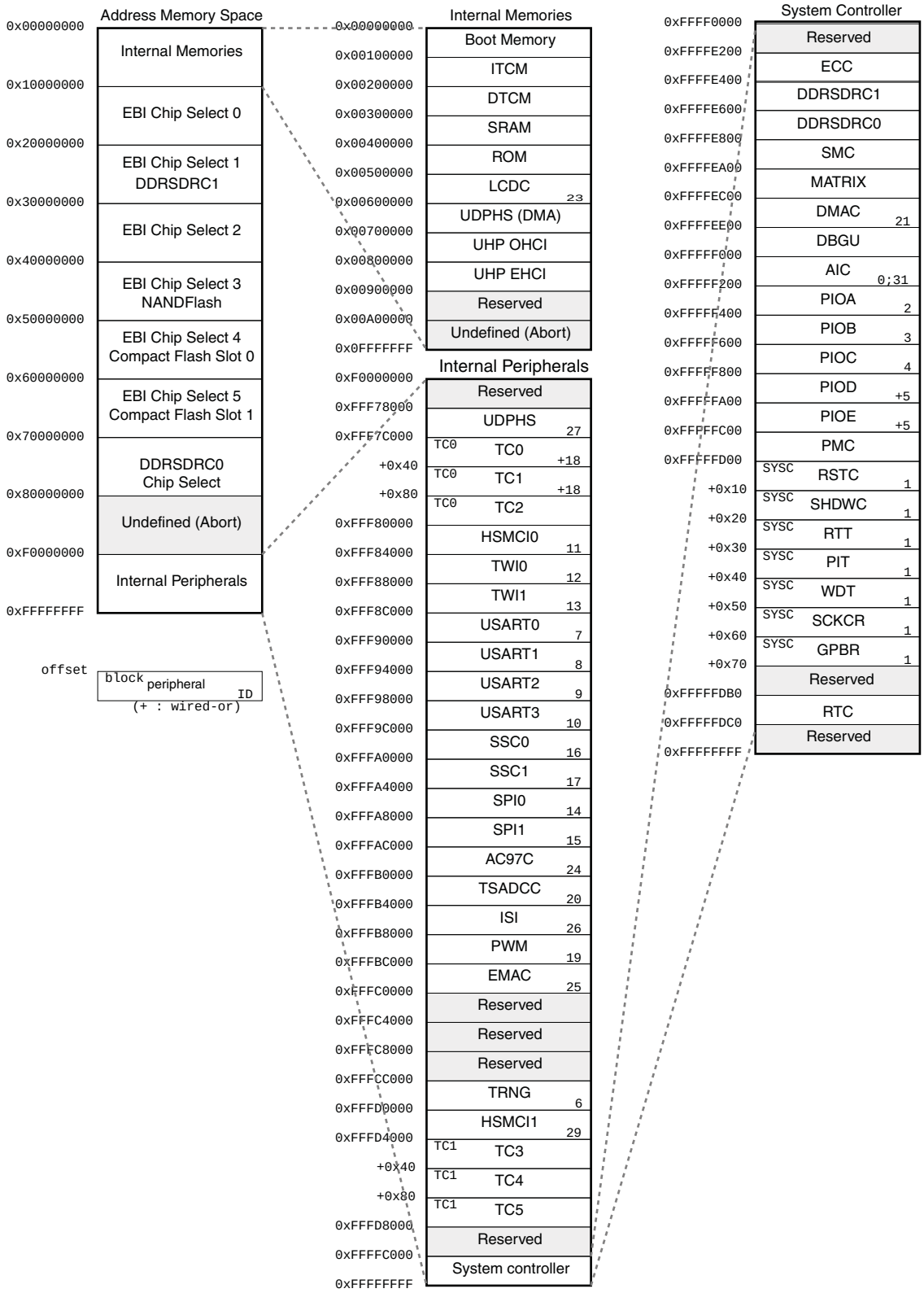

6.1 Memory Mapping

A first level of address decoding is performed by the AHB Bus Matrix, i.e., the implementation of the Advanced High performance Bus (AHB) for its Master and Slave interfaces with additional features.

Decoding breaks up the 4 Gbytes of address space into 16 banks of 256 Mbytes. The banks 1 to 6 are directed to the EBI that associates these banks to the external chip selects NCS0 to NCS5.

The bank 7 is directed to the DDRSDRC0 that associates this bank to DDR_NCS chip select and so dedicated to the 4-port DDR2/ LPDDR controller.

The bank 0 is reserved for the addressing of the internal memories, and a second level of decoding provides 1 Mbyte of internal memory area. The bank 15 is reserved for the peripherals and provides access to the Advanced Peripheral Bus (APB).

Other areas are unused and performing an access within them provides an abort to the master requesting such an access.

6.2 Embedded Memories

6.2.1 Internal SRAM

The SAM9G45 product embeds a total of 64Kbytes high-speed SRAM split in 4 blocks of 16 Kbytes connected to one slave of the matrix. After reset and until the Remap Command is performed, the four SRAM blocks are contiguous and only accessible at address 0x00300000. After Remap, the SRAM also becomes available at address 0x0.

Figure 6-2. Internal SRAM Reset

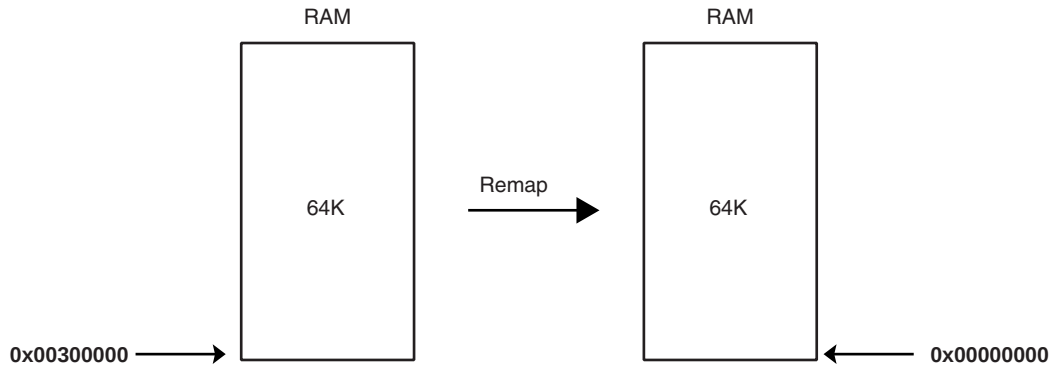

The SAM9G45 device embeds two memory features. The processor Tightly Coupled Memory Interface (TCM) that allows the processor to access the memory up to processor speed (PCK) and the interface on the AHB side allowing masters to access the memory at AHB speed (MCK).

A wait state is necessary to access the TCM at 400 MHz. Setting the bit NWS_TCM in the bus Matrix TCM Configuration Register of the matrix inserts a wait state on the ITCM and DTCM accesses.

6.2.2 TCM Interface

On the processor side, this Internal SRAM can be allocated to two areas.

- Internal SRAM A is the ARM926EJ-S Instruction TCM. The user can map this SRAM block anywhere in the ARM926 instruction memory space using CP15 instructions and the TCR configuration register located in the Chip Configuration User Interface. This SRAM block is also accessible by the ARM926 Masters and by the AHB Masters through the AHB bus

- Internal SRAM B is the ARM926EJ-S Data TCM. The user can map this SRAM block anywhere in the ARM926 data memory space using CP15 instructions. This SRAM block is also accessible by the ARM926 Data Master and by the AHB Masters through the AHB bus.
- Internal SRAM C is only accessible by all the AHB Masters. After reset and until the Remap Command is performed, this SRAM block is accessible through the AHB bus at address 0x0030 0000 by all the AHB Masters. After Remap, this SRAM block also becomes accessible through the AHB bus at address 0x0 by the ARM926 Instruction and the ARM926 Data Masters.

Within the 64 Kbytes SRAM size available, the amount of memory assigned to each block is software programmable according to Table 6-1.

Table 6-1. ITCM and DTCM Memory Configuration

SRAM A ITCM size (Kbytes) seen at 0x100000 through AHB	SRAM B DTCM size (Kbytes) seen at 0x200000 through AHB	SRAM C (Kbytes) seen at 0x300000 through AHB
0	0	64
0	64	0
32	32	0

6.2.3 Internal ROM

The SAM9G45 embeds an Internal ROM, which contains the boot ROM and SAM-BA® program.

At any time, the ROM is mapped at address 0x0040 0000. It is also accessible at address 0x0 (BMS =1) after the reset and before the Remap Command.

6.3 I/O Drive Selection and Delay Control

6.3.1 I/O Drive Selection

The aim of this control is to adapt the signal drive to the frequency. Two bits allow the user to select High or Low drive for memories data/address/ctrl signals.

- Setting the bit [17], EBI_DRIVE, in the EBI_CSA register of the matrix allows to control the drive of the EBI.
- Setting the bit [18], DDR_DRIVE, in the EBI_CSA register of the matrix allows to control the drive of the DDR.

6.3.2 Delay Control

To avoid the simultaneous switching of all the I/Os, a delay can be inserted on the different EBI, DDR2 and PIO lines.

The control of these delays is the following:

- DDRSDRC

DDR_D[15:0] controlled by 2 registers, DELAY1 and DELAY2, located in the DDRSDRC user interface

  – DDR_D[0] <=> DELAY1[3:0],
  – DDR_D[1] <=> DELAY1[7:4],...
  – DDR_D[6] <=> DELAY1[27:24],
  – DDR_D[7] <=> DELAY1[31:28]
  – DDR_D[8] <=> DELAY2[3:0],
  – DDR_D[9] <=> DELAY2[7:4],...,
  – DDR_D[14] <=> DELAY2[27:24],
  – DDR_D[15] <=> DELAY2[31:28]

DDR_A[13:0] controlled by 2 registers, DELAY3 and DELAY4, located in the DDRSDRC user interface

  – DDR_A[0] <=> DELAY3[3:0],
  – DDR_A[1] <=> DELAY3[7:4], ...,
  – DDR_A[6] <=> DELAY3[27:24],
  – DDR_A[7] <=> DELAY3[31:28]
  – DDR_A[8] <=> DELAY4[3:0],
  – DDR_A[9] <=> DELAY4[7:4], ...,
  – DDR_A[12] <=> DELAY4[19:16],
  – DDR_A[13] <=> DELAY4[23:20]

- EBI (DDRSDRC\HSMC3\Nandflash)

D[15:0] controlled by 2 registers, DELAY1 and DELAY2, located in the HSMC3 user interface

  – D[0] <=> DELAY1[3:0],
  – D[1] <=> DELAY1[7:4],...,
  – D[6] <=> DELAY1[27:24],
  – D[7] <=> DELAY1[31:28]
  – D[8] <=> DELAY2[3:0],
  – D[9] <=> DELAY2[7:4],...,
  – D[14] <=> DELAY2[27:24],
  – D[15] <=> DELAY2[31:28]

D[31,16]on PIOC[31:16] controlled by 2 registers, DELAY3 and DELAY4, located in the HSMC3 user interface

- D[16] <=> DELAY3[3:0],
- D[17] <=> DELAY3[7:4],...,
- D[22] <=> DELAY3[27:24],
- PC[23] <=> DELAY3[31:28]
- D[24] <=> DELAY4[3:0],
- D[25] <=> DELAY4[7:4],...,
- D[30] <=> DELAY4[27:24],
- D[31] <=> DELAY4[31:28]

A[25:0], controlled by 4 registers, DELAY5, DELAY6, DELAY7and DELAY8, located in the HSMC3 user interface

- A[0] <=> DELAY5[3:0],
- A[1] <=> DELAY5[7:4],...,
- A[6] <=> DELAY5[27:24],
- A[7] <=> DELAY5[31:28]
- A[8] <=> DELAY6[3:0],
- A[9] <=> DELAY6[7:4],...,
- A[14] <=> DELAY6[27:24],
- A[15] <=> DELAY6[31:28]
- A[16] <=> DELAY7[3:0],
- A[17] <=> DELAY7[7:4],
- A[18] <=> DELAY7[11:8]

A25 on PC[12] and A[24:19] on PC[7:2]

- A19 <=> DELAY7[15:12],
- A20 <=> DELAY7[19:16],...,
- A23 <=> DELAY7[31:28],
- A24 <=> DELAY8[3:0],
- A25 <=> DELAY8[7:4]

• PIOA User interface

The delay can only be inserted on the HSMCI0 and HSMCI1 I/O lines, so on **PA[9:2] and PA[30:23].** The delay is controlled by 2 registers, DELAY1 and DELAY2, located in the PIOA user interface.

- PA[2] <=> DELAY1[3:0],
- PA[3] <=> DELAY1[7:4],...,
- PA[8] <=> DELAY1[27:24],
- PA[9] <=> DELAY1[31:28]
- PA[23] <=> DELAY2[3:0],
- PA[24] <=> DELAY2[7:4],...,
- PA[29] <=> DELAY2[27:24],
- PA[30] <=> DELAY2[31:28]

7. System Controller

The System Controller is a set of peripherals that allows handling of key elements of the system, such as power, resets, clocks, time, interrupts, watchdog, etc.

The System Controller User Interface also embeds the registers that configure the Matrix and a set of registers for the chip configuration. The chip configuration registers configure the EBI chip select assignment and voltage range for external memories.

7.1 System Controller Mapping

The System Controller's peripherals are all mapped within the highest 16 Kbytes of address space, between addresses 0xFFFF E800 and 0xFFFF FFFF.

However, all the registers of the System Controller are mapped on the top of the address space. All the registers of the System Controller can be addressed from a single pointer by using the standard ARM instruction set, as the Load/Store instruction have an indexing mode of ±4 Kbyte.

Figure 7-1 on page 21 shows the System Controller block diagram.

Figure 6-1 on page 15 shows the mapping of the User Interfaces of the System Controller peripherals.

7.2 System Controller Block Diagram

Figure 7-1. SAM9G45 System Controller Block Diagram

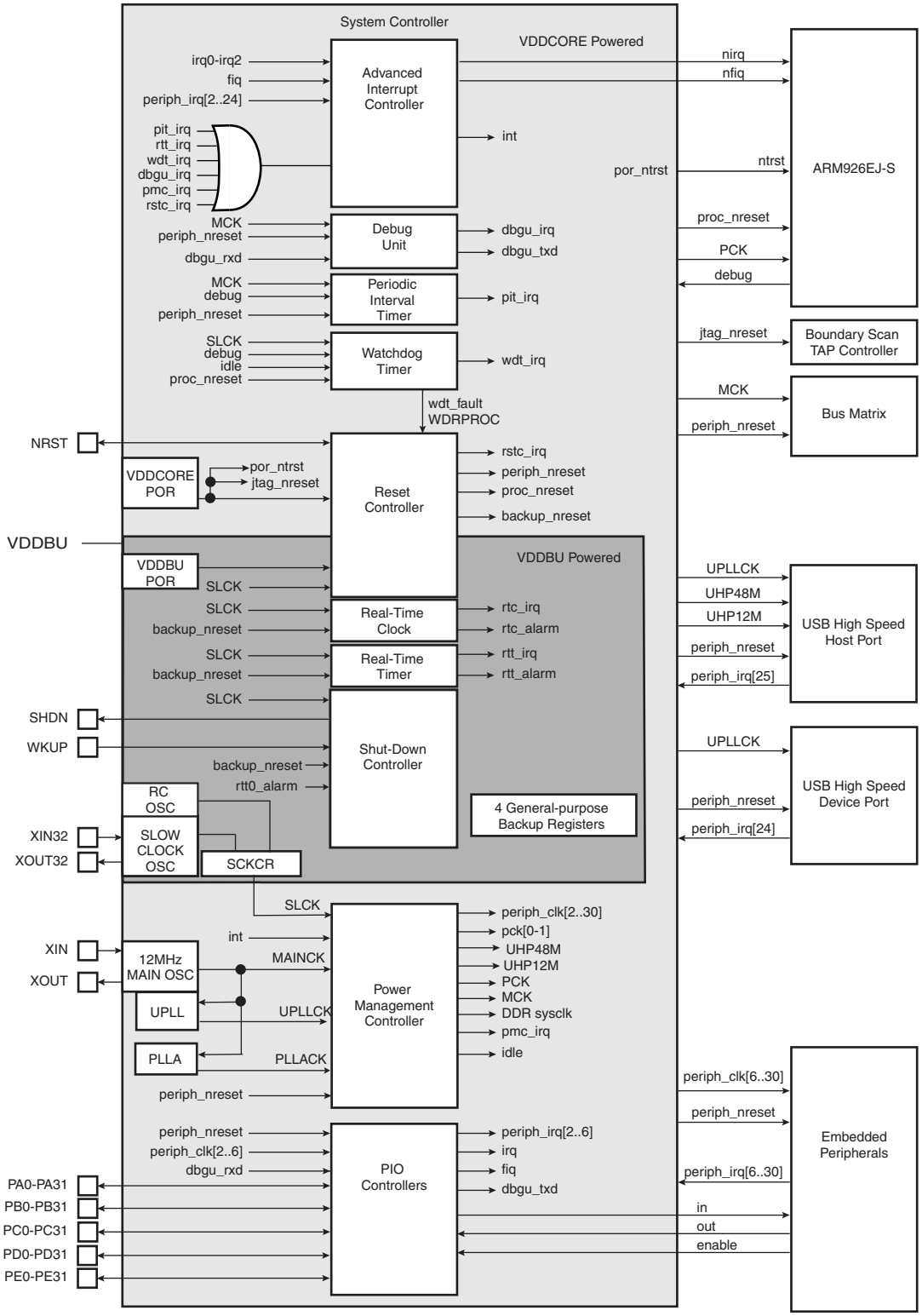

7.3 Chip Identification

The AT91SAM9G45 Chip ID is defined in the Debug Unit Chip ID Register and Debug Unit Chip ID Extension Register.

- Chip ID: 0x819B05A2
- Ext ID: 0x00000004
- JTAG ID: 05B2_703F
- ARM926 TAP ID: 0x0792603F

7.4 Backup Section

The SAM9G45 features a Backup Section that embeds:

- RC Oscillator
- Slow Clock Oscillator
- SCKR register
- RTT
- RTC
- Shutdown Controller
- 4 backup registers
- A part of RSTC

This section is powered by the VDDBU rail.

8. Peripherals

8.1 Peripheral Mapping

As shown in Figure 6-1, the Peripherals are mapped in the upper 256 Mbytes of the address space between the addresses 0xFFF7 8000 and 0xFFFC FFFF.

Each User Peripheral is allocated 16K bytes of address space.

8.2 Peripheral Identifiers

Table 8-1 defines the Peripheral Identifiers of the SAM9G45. A peripheral identifier is required for the control of the peripheral interrupt with the Advanced Interrupt Controller and for the control of the peripheral clock with the Power Management Controller.

Table 8-1. SAM9G45 Peripheral Identifiers

Peripheral ID	Peripheral Mnemonic	Peripheral Name	External Interrupt
0	**AIC**	Advanced Interrupt Controller	FIQ
1	**SYSC**	System Controller Interrupt	
2	**PIOA**	Parallel I/O Controller A,	
3	**PIOB**	Parallel I/O Controller B	
4	**PIOC**	Parallel I/O Controller C	
5	**PIOD/PIOE**	Parallel I/O Controller D/E	
6	**TRNG**	True Random Number Generator	
7	**US0**	USART 0	
8	**US1**	USART 1	
9	**US2**	USART 2	
10	**US3**	USART 3	
11	**MCI0**	High Speed Multimedia Card Interface 0	
12	**TWI0**	Two-Wire Interface 0	
13	**TWI1**	Two-Wire Interface 1	
14	**SPI0**	Serial Peripheral Interface	
15	**SPI1**	Serial Peripheral Interface	
16	**SSC0**	Synchronous Serial Controller 0	
17	**SSC1**	Synchronous Serial Controller 1	
18	**TC0..TC5**	Timer Counter 0,1,2,3,4,5	
19	**PWM**	Pulse Width Modulation Controller	
20	**TSADCC**	Touch Screen ADC Controller	
21	**DMA**	DMA Controller	
22	**UHPHS**	USB Host High Speed	
23	**LCDC**	LCD Controller	
24	**AC97C**	AC97 Controller	
25	**EMAC**	Ethernet MAC	
26	**ISI**	Image Sensor Interface	
27	**UDPHS**	USB Device High Speed	
29	**MCI1**	High Speed Multimedia Card Interface 1	
30	**Reserved**		
31	**AIC**	Advanced Interrupt Controller	IRQ

8.3 Peripheral Interrupts and Clock Control

8.3.1 System Interrupt

The System Interrupt in Source 1 is the wired-OR of the interrupt signals coming from:

- The DDR2/LPDDR Controller
- The Debug Unit
- The Periodic Interval Timer
- The Real-Time Timer
- The Real-Time Clock
- The Watchdog Timer
- The Reset Controller
- The Power Management Controller

The clock of these peripherals cannot be deactivated and Peripheral ID 1 can only be used within the Advanced Interrupt Controller.

8.3.2 External Interrupts

All external interrupt signals, i.e., the Fast Interrupt signal FIQ or the Interrupt signal IRQ, use a dedicated Peripheral ID. However, there is no clock control associated with these peripheral IDs.

8.4 Peripheral Signals Multiplexing on I/O Lines

The SAM9G45 features 5 PIO controllers, PIOA, PIOB, PIOC, PIOD and PIOE, which multiplexes the I/O lines of the peripheral set.

Each PIO Controller controls up to 32 lines. Each line can be assigned to one of two peripheral functions, A or B. The multiplexing tables in the following paragraphs define how the I/O lines of the peripherals A and B are multiplexed on the PIO Controllers. The two columns “Function” and “Comments” have been inserted in this table for the user’s own comments; they may be used to track how pins are defined in an application.

Note that some peripheral function which are output only, might be duplicated within the both tables.

The column “Reset State” indicates whether the PIO Line resets in I/O mode or in peripheral mode. If I/O is mentioned, the PIO Line resets in input with the pull-up enabled, so that the device is maintained in a static state as soon as the reset is released. As a result, the bit corresponding to the PIO Line in the register PIO_PSR (Peripheral Status Register) resets low.

If a signal name is mentioned in the “Reset State” column, the PIO Line is assigned to this function and the corresponding bit in PIO_PSR resets high. This is the case of pins controlling memories, in particular the address lines, which require the pin to be driven as soon as the reset is released. Note that the pull-up resistor is also enabled in this case.

To amend EMC, programmable delay has been inserted on PIO lines able to run at high speed.

8.4.1 PIO Controller A Multiplexing

Table 8-2. Multiplexing on PIO Controller A (PIOA)

I/O Line	Peripheral A	Peripheral B	Reset State	Power Supply	Function	Comments
PA0	MCI0_CK	TCLK3	I/O	VDDIOP0		
PA1	MCI0_CDA	TIOA3	I/O	VDDIOP0		
PA2	MCI0_DA0	TIOB3	I/O	VDDIOP0		
PA3	MCI0_DA1	TCKL4	I/O	VDDIOP0		
PA4	MCI0_DA2	TIOA4	I/O	VDDIOP0		
PA5	MCI0_DA3	TIOB4	I/O	VDDIOP0		
PA6	MCI0_DA4	ETX2	I/O	VDDIOP0		
PA7	MCI0_DA5	ETX3	I/O	VDDIOP0		
PA8	MCI0_DA6	ERX2	I/O	VDDIOP0		
PA9	MCI0_DA7	ERX3	I/O	VDDIOP0		
PA10	ETX0		I/O	VDDIOP0		
PA11	ETX1		I/O	VDDIOP0		
PA12	ERX0		I/O	VDDIOP0		
PA13	ERX1		I/O	VDDIOP0		
PA14	ETXEN		I/O	VDDIOP0		
PA15	ERXDV		I/O	VDDIOP0		
PA16	ERXER		I/O	VDDIOP0		
PA17	ETXCK		I/O	VDDIOP0		
PA18	EMDC		I/O	VDDIOP0		
PA19	EMDIO		I/O	VDDIOP0		
PA20	TWD0		I/O	VDDIOP0		
PA21	TWCK0		I/O	VDDIOP0		
PA22	MCI1_CDA	SCK3	I/O	VDDIOP0		
PA23	MCI1_DA0	RTS3	I/O	VDDIOP0		
PA24	MCI1_DA1	CTS3	I/O	VDDIOP0		
PA25	MCI1_DA2	PWM3	I/O	VDDIOP0		
PA26	MCI1_DA3	TIOB2	I/O	VDDIOP0		
PA27	MCI1_DA4	ETXER	I/O	VDDIOP0		
PA28	MCI1_DA5	ERXCK	I/O	VDDIOP0		
PA29	MCI1_DA6	ECRS	I/O	VDDIOP0		
PA30	MCI1_DA7	ECOL	I/O	VDDIOP0		
PA31	MCI1_CK	PCK0	I/O	VDDIOP0		

8.4.2 PIO Controller B Multiplexing

Table 8-3. Multiplexing on PIO Controller B (PIOB)

I/O Line	Peripheral A	Peripheral B	Reset State	Power Supply	Function	Comments
PB0	SPI0_MISO		I/O	VDDIOP0		
PB1	SPI0_MOSI		I/O	VDDIOP0		
PB2	SPI0_SPCK		I/O	VDDIOP0		
PB3	SPI0_NPCS0		I/O	VDDIOP0		
PB4	TXD1		I/O	VDDIOP0		
PB5	RXD1		I/O	VDDIOP0		
PB6	TXD2		I/O	VDDIOP0		
PB7	RXD2		I/O	VDDIOP0		
PB8	TXD3	ISI_D8	I/O	VDDIOP2		
PB9	RXD3	ISI_D9	I/O	VDDIOP2		
PB10	TWD1	ISI_D10	I/O	VDDIOP2		
PB11	TWCK1	ISI_D11	I/O	VDDIOP2		
PB12	DRXD		I/O	VDDIOP0		
PB13	DTXD		I/O	VDDIOP0		
PB14	SPI1_MISO		I/O	VDDIOP0		
PB15	SPI1_MOSI	CTS0	I/O	VDDIOP0		
PB16	SPI1_SPCK	SCK0	I/O	VDDIOP0		
PB17	SPI1_NPCS0	RTS0	I/O	VDDIOP0		
PB18	RXD0	SPI0_NPCS1	I/O	VDDIOP0		
PB19	TXD0	SPI0_NPCS2	I/O	VDDIOP0		
PB20	ISI_D0		I/O	VDDIOP2		
PB21	ISI_D1		I/O	VDDIOP2		
PB22	ISI_D2		I/O	VDDIOP2		
PB23	ISI_D3		I/O	VDDIOP2		
PB24	ISI_D4		I/O	VDDIOP2		
PB25	ISI_D5		I/O	VDDIOP2		
PB26	ISI_D6		I/O	VDDIOP2		
PB27	ISI_D7		I/O	VDDIOP2		
PB28	ISI_PCK		I/O	VDDIOP2		
PB29	ISI_VSYNC		I/O	VDDIOP2		
PB30	ISI_HSYNC		I/O	VDDIOP2		
PB31	ISI_MCK	PCK1	I/O	VDDIOP2		

8.4.3 PIO Controller C Multiplexing

Table 8-4. Multiplexing on PIO Controller C (PIOC)

I/O Line	Peripheral A	Peripheral B	Reset State	Power Supply	Function	Comments
PC0	DQM2		DQM2	VDDIOM1		
PC1	DQM3		DQM3	VDDIOM1		
PC2	A19		A19	VDDIOM1		
PC3	A20		A20	VDDIOM1		
PC4	A21/NANDALE		A21	VDDIOM1		
PC5	A22/NANDCLE		A22	VDDIOM1		
PC6	A23		A23	VDDIOM1		
PC7	A24		A24	VDDIOM1		
PC8	CFCE1		I/O	VDDIOM1		
PC9	CFCE2	RTS2	I/O	VDDIOM1		
PC10	NCS4/CFCS0	TCLK2	I/O	VDDIOM1		
PC11	NCS5/CFCS1	CTS2	I/O	VDDIOM1		
PC12	A25/CFRNW		A25	VDDIOM1		
PC13	NCS2		I/O	VDDIOM1		
PC14	NCS3/NANDCS		I/O	VDDIOM1		
PC15	NWAIT		I/O	VDDIOM1		
PC16	D16		I/O	VDDIOM1		
PC17	D17		I/O	VDDIOM1		
PC18	D18		I/O	VDDIOM1		
PC19	D19		I/O	VDDIOM1		
PC20	D20		I/O	VDDIOM1		
PC21	D21		I/O	VDDIOM1		
PC22	D22		I/O	VDDIOM1		
PC23	D23		I/O	VDDIOM1		
PC24	D24		I/O	VDDIOM1		
PC25	D25		I/O	VDDIOM1		
PC26	D26		I/O	VDDIOM1		
PC27	D27		I/O	VDDIOM1		
PC28	D28		I/O	VDDIOM1		
PC29	D29		I/O	VDDIOM1		
PC30	D30		I/O	VDDIOM1		
PC31	D31		I/O	VDDIOM1		

8.4.4 PIO Controller D Multiplexing

Table 8-5. Multiplexing on PIO Controller D (PIOD)

I/O Line	Peripheral A	Peripheral B	Reset State	Power Supply	Function	Comments
PD0	TK0	PWM3	I/O	VDDIOP0		
PD1	TF0		I/O	VDDIOP0		
PD2	TD0		I/O	VDDIOP0		
PD3	RD0		I/O	VDDIOP0		
PD4	RK0		I/O	VDDIOP0		
PD5	RF0		I/O	VDDIOP0		
PD6	AC97RX		I/O	VDDIOP0		
PD7	AC97TX	TIOA5	I/O	VDDIOP0		
PD8	AC97FS	TIOB5	I/O	VDDIOP0		
PD9	AC97CK	TCLK5	I/O	VDDIOP0		
PD10	TD1		I/O	VDDIOP0		
PD11	RD1		I/O	VDDIOP0		
PD12	TK1	PCK0	I/O	VDDIOP0		
PD13	RK1		I/O	VDDIOP0		
PD14	TF1		I/O	VDDIOP0		
PD15	RF1		I/O	VDDIOP0		
PD16	RTS1		I/O	VDDIOP0		
PD17	CTS1		I/O	VDDIOP0		
PD18	SPI1_NPCS2	IRQ	I/O	VDDIOP0		
PD19	SPI1_NPCS3	FIQ	I/O	VDDIOP0		
PD20	TIOA0		I/O	VDDANA		TSAD0
PD21	TIOA1		I/O	VDDANA		TSAD1
PD22	TIOA2		I/O	VDDANA		TSAD2
PD23	TCLK0		I/O	VDDANA		TSAD3
PD24	SPI0_NPCS1	PWM0	I/O	VDDANA		GPAD4
PD25	SPI0_NPCS2	PWM1	I/O	VDDANA		GPAD5
PD26	PCK0	PWM2	I/O	VDDANA		GPAD6
PD27	PCK1	SPI0_NPCS3	I/O	VDDANA		GPAD7
PD28	TSADTRG	SPI1_NPCS1	I/O	VDDIOP0		
PD29	TCLK1	SCK1	I/O	VDDIOP0		
PD30	TIOB0	SCK2	I/O	VDDIOP0		
PD31	TIOB1	PWM1	I/O	VDDIOP0		

8.4.5 PIO Controller E Multiplexing

Table 8-6. Multiplexing on PIO Controller E (PIOE)

I/O Line	Peripheral A	Peripheral B	Reset State	Power Supply	Function	Comments
PE0	LCDPWR	PCK0	I/O	VDDIOP1		
PE1	LCDMOD		I/O	VDDIOP1		
PE2	LCDCC		I/O	VDDIOP1		
PE3	LCDVSYNC		I/O	VDDIOP1		
PE4	LCDHSYNC		I/O	VDDIOP1		
PE5	LCDDOTCK		I/O	VDDIOP1		
PE6	LCDDEN		I/O	VDDIOP1		
PE7	LCDD0	LCDD2	I/O	VDDIOP1		
PE8	LCDD1	LCDD3	I/O	VDDIOP1		
PE9	LCDD2	LCDD4	I/O	VDDIOP1		
PE10	LCDD3	LCDD5	I/O	VDDIOP1		
PE11	LCDD4	LCDD6	I/O	VDDIOP1		
PE12	LCDD5	LCDD7	I/O	VDDIOP1		
PE13	LCDD6	LCDD10	I/O	VDDIOP1		
PE14	LCDD7	LCDD11	I/O	VDDIOP1		
PE15	LCDD8	LCDD12	I/O	VDDIOP1		
PE16	LCDD9	LCDD13	I/O	VDDIOP1		
PE17	LCDD10	LCDD14	I/O	VDDIOP1		
PE18	LCDD11	LCDD15	I/O	VDDIOP1		
PE19	LCDD12	LCDD18	I/O	VDDIOP1		
PE20	LCDD13	LCDD19	I/O	VDDIOP1		
PE21	LCDD14	LCDD20	I/O	VDDIOP1		
PE22	LCDD15	LCDD21	I/O	VDDIOP1		
PE23	LCDD16	LCDD22	I/O	VDDIOP1		
PE24	LCDD17	LCDD23	I/O	VDDIOP1		
PE25	LCDD18		I/O	VDDIOP1		
PE26	LCDD19		I/O	VDDIOP1		
PE27	LCDD20		I/O	VDDIOP1		
PE28	LCDD21		I/O	VDDIOP1		
PE29	LCDD22		I/O	VDDIOP1		
PE30	LCDD23		I/O	VDDIOP1		
PE31	PWM2	PCK1	I/O	VDDIOP1		

9. ARM926EJ-S Processor Overview

9.1 Description

The ARM926EJ-S™ processor is a member of the ARM9™ family of general-purpose microprocessors. The ARM926EJ-S implements ARM architecture version 5TEJ and is targeted at multi-tasking applications where full memory management, high performance, low die size and low power are all important features.

The ARM926EJ-S processor supports the 32-bit ARM and 16-bit THUMB instruction sets, enabling the user to trade off between high performance and high code density. It also supports 8-bit Java instruction set and includes features for efficient execution of Java bytecode, providing a Java performance similar to a JIT (Just-In-Time compilers), for the next generation of Java-powered wireless and embedded devices. It includes an enhanced multiplier design for improved DSP performance.

The ARM926EJ-S processor supports the ARM debug architecture and includes logic to assist in both hardware and software debug.

The ARM926EJ-S provides a complete high performance processor subsystem, including:

- An ARM9EJ-S integer core
- A Memory Management Unit (MMU)
- Separate instruction and data AMBA AHB bus interfaces
- Separate instruction and data TCM interfaces

9.2 Embedded Characteristics

- RISC Processor Based on ARM v5TEJ Architecture with Jazelle technology for Java acceleration
- Two Instruction Sets
  - ARM High-performance 32-bit Instruction Set
  - Thumb High Code Density 16-bit Instruction Set
- DSP Instruction Extensions
- 5-Stage Pipeline Architecture:
  - Instruction Fetch (F)
  - Instruction Decode (D)
  - Execute (E)
  - Data Memory (M)
  - Register Write (W)
- 32-Kbyte Data Cache, 32-Kbyte Instruction Cache
  - Virtually-addressed 4-way Associative Cache
  - Eight words per line
  - Write-through and Write-back Operation
  - Pseudo-random or Round-robin Replacement
- Write Buffer
  - Main Write Buffer with 16-word Data Buffer and 4-address Buffer
  - DCache Write-back Buffer with 8-word Entries and a Single Address Entry
  - Software Control Drain
- Standard ARM v4 and v5 Memory Management Unit (MMU)
  - Access Permission for Sections
  - Access Permission for large pages and small pages can be specified separately for each quarter of the page
  - 16 embedded domains
- Bus Interface Unit (BIU)
  - Arbitrates and Schedules AHB Requests
  - Separate Masters for both instruction and data access providing complete Matrix system flexibility
  - Separate Address and Data Buses for both the 32-bit instruction interface and the 32-bit data interface
  - On Address and Data Buses, data can be 8-bit (Bytes), 16-bit (Half-words) or 32-bit (Words)
- TCM Interface

9.3 Block Diagram

Figure 9-1. ARM926EJ-S Internal Functional Block Diagram

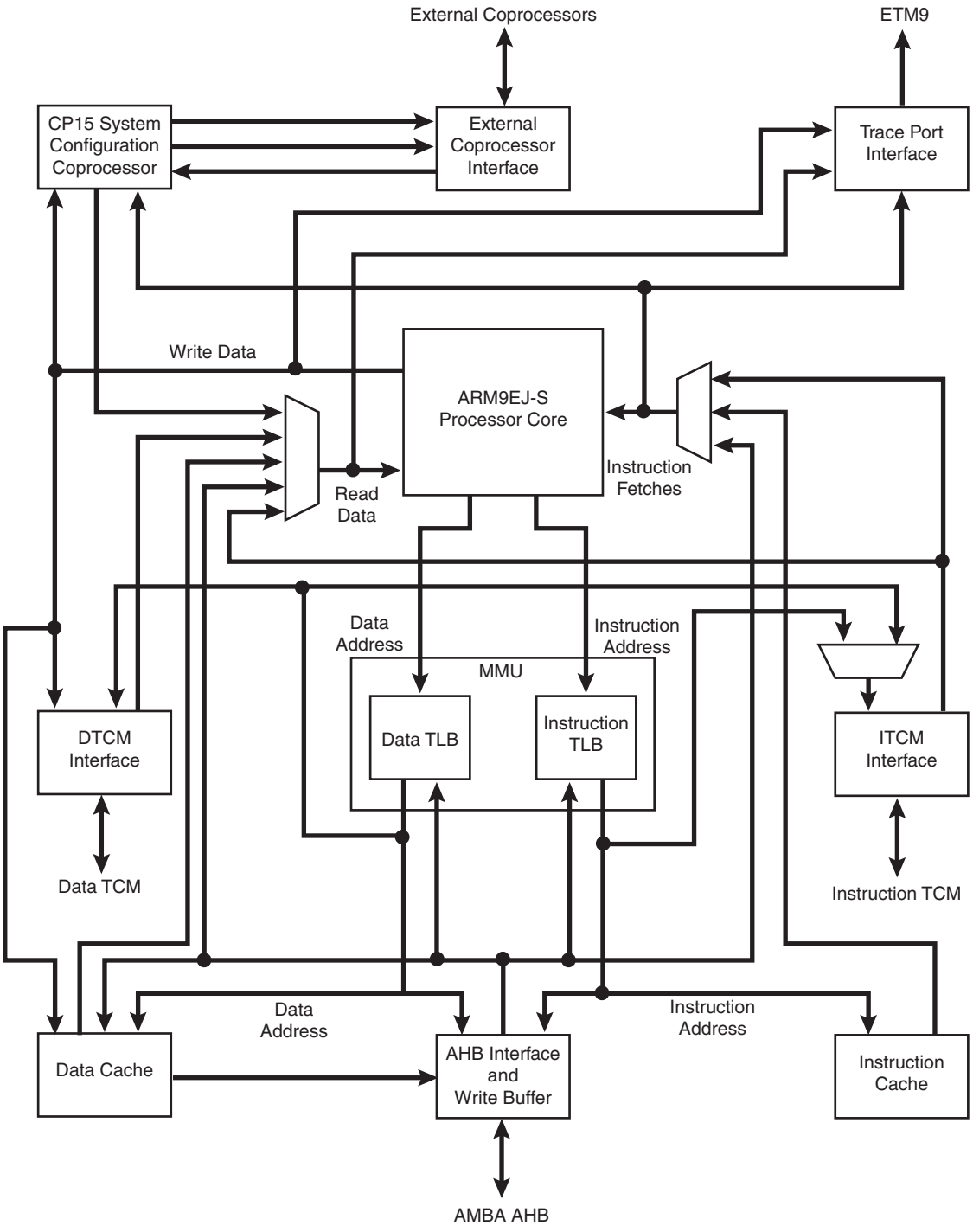

9.4 ARM9EJ-S Processor

9.4.1 ARM9EJ-S Operating States

The ARM9EJ-S processor can operate in three different states, each with a specific instruction set:

- ARM state: 32-bit, word-aligned ARM instructions.
- THUMB state: 16-bit, halfword-aligned Thumb instructions.
- Jazelle state: variable length, byte-aligned Jazelle instructions.

In Jazelle state, all instruction Fetches are in words.

9.4.2 Switching State

The operating state of the ARM9EJ-S core can be switched between:

- ARM state and THUMB state using the BX and BLX instructions, and loads to the PC
- ARM state and Jazelle state using the BXJ instruction

All exceptions are entered, handled and exited in ARM state. If an exception occurs in Thumb or Jazelle states, the processor reverts to ARM state. The transition back to Thumb or Jazelle states occurs automatically on return from the exception handler.

9.4.3 Instruction Pipelines

The ARM9EJ-S core uses two kinds of pipelines to increase the speed of the flow of instructions to the processor.

A five-stage (five clock cycles) pipeline is used for ARM and Thumb states. It consists of Fetch, Decode, Execute, Memory and Writeback stages.

A six-stage (six clock cycles) pipeline is used for Jazelle state It consists of Fetch, Jazelle/Decode (two clock cycles), Execute, Memory and Writeback stages.

9.4.4 Memory Access

The ARM9EJ-S core supports byte (8-bit), half-word (16-bit) and word (32-bit) access. Words must be aligned to four-byte boundaries, half-words must be aligned to two-byte boundaries and bytes can be placed on any byte boundary.

Because of the nature of the pipelines, it is possible for a value to be required for use before it has been placed in the register bank by the actions of an earlier instruction. The ARM9EJ-S control logic automatically detects these cases and stalls the core or forward data.

9.4.5 Jazelle Technology

The Jazelle technology enables direct and efficient execution of Java byte codes on ARM processors, providing high performance for the next generation of Java-powered wireless and embedded devices.

The new Java feature of ARM9EJ-S can be described as a hardware emulation of a JVM (Java Virtual Machine). Java mode will appear as another state: instead of executing ARM or Thumb instructions, it executes Java byte codes. The Java byte code decoder logic implemented in ARM9EJ-S decodes 95% of executed byte codes and turns them into ARM instructions without any overhead, while less frequently used byte codes are broken down into optimized sequences of ARM instructions. The hardware/software split is invisible to the programmer, invisible to the application and invisible to the operating system. All existing ARM registers are re-used in Jazelle state and all registers then have particular functions in this mode.

Minimum interrupt latency is maintained across both ARM state and Java state. Since byte codes execution can be restarted, an interrupt automatically triggers the core to switch from Java state to ARM state for the execution of the interrupt handler. This means that no special provision has to be made for handling interrupts while executing byte codes, whether in hardware or in software.

9.4.6 ARM9EJ-S Operating Modes

In all states, there are seven operation modes:

- User mode is the usual ARM program execution state. It is used for executing most application programs
- Fast Interrupt (FIQ) mode is used for handling fast interrupts. It is suitable for high-speed data transfer or channel process
- Interrupt (IRQ) mode is used for general-purpose interrupt handling
- Supervisor mode is a protected mode for the operating system
- Abort mode is entered after a data or instruction prefetch abort
- System mode is a privileged user mode for the operating system
- Undefined mode is entered when an undefined instruction exception occurs

Mode changes may be made under software control, or may be brought about by external interrupts or exception processing. Most application programs execute in User Mode. The non-user modes, known as privileged modes, are entered in order to service interrupts or exceptions or to access protected resources.

9.4.7 ARM9EJ-S Registers

The ARM9EJ-S core has a total of 37 registers.

- 31 general-purpose 32-bit registers
- 6 32-bit status registers

Table 9-1 shows all the registers in all modes.

Table 9-1. ARM9TDMI Modes and Registers Layout

User and System Mode	Supervisor Mode	Abort Mode	Undefined Mode	Interrupt Mode	Fast Interrupt Mode
R0	R0	R0	R0	R0	R0
R1	R1	R1	R1	R1	R1
R2	R2	R2	R2	R2	R2
R3	R3	R3	R3	R3	R3
R4	R4	R4	R4	R4	R4
R5	R5	R5	R5	R5	R5
R6	R6	R6	R6	R6	R6
R7	R7	R7	R7	R7	R7
R8	R8	R8	R8	R8	R8_FIQ
R9	R9	R9	R9	R9	R9_FIQ
R10	R10	R10	R10	R10	R10_FIQ
R11	R11	R11	R11	R11	R11_FIQ
R12	R12	R12	R12	R12	R12_FIQ
R13	R13_SVC	R13_ABORT	R13_UNDEF	R13_IRQ	R13_FIQ
R14	R14_SVC	R14_ABORT	R14_UNDEF	R14_IRQ	R14_FIQ
PC	PC	PC	PC	PC	PC
CPSR	CPSR	CPSR	CPSR	CPSR	CPSR

Table 9-1. ARM9TDMI Modes and Registers Layout (Continued)

User and System Mode	Supervisor Mode	Abort Mode	Undefined Mode	Interrupt Mode	Fast Interrupt Mode
	SPSR_SVC	SPSR_ABORT	SPSR_UNDEF	SPSR_IRQ	SPSR_FIQ

Mode-specific banked registers

The ARM state register set contains 16 directly-accessible registers, r0 to r15, and an additional register, the Current Program Status Register (CPSR). Registers r0 to r13 are general-purpose registers used to hold either data or address values. Register r14 is used as a Link register that holds a value (return address) of r15 when BL or BLX is executed. Register r15 is used as a program counter (PC), whereas the Current Program Status Register (CPSR) contains condition code flags and the current mode bits.

In privileged modes (FIQ, Supervisor, Abort, IRQ, Undefined), mode-specific banked registers (r8 to r14 in FIQ mode or r13 to r14 in the other modes) become available. The corresponding banked registers r14_fiq, r14_svc, r14_abt, r14_irq, r14_und are similarly used to hold the values (return address for each mode) of r15 (PC) when interrupts and exceptions arise, or when BL or BLX instructions are executed within interrupt or exception routines. There is another register called Saved Program Status Register (SPSR) that becomes available in privileged modes instead of CPSR. This register contains condition code flags and the current mode bits saved as a result of the exception that caused entry to the current (privileged) mode.

In all modes and due to a software agreement, register r13 is used as stack pointer.

The use and the function of all the registers described above should obey ARM Procedure Call Standard (APCS) which defines:

- Constraints on the use of registers
- Stack conventions
- Argument passing and result return

For more details, refer to ARM Software Development Kit.

The Thumb state register set is a subset of the ARM state set. The programmer has direct access to:

- Eight general-purpose registers r0-r7
- Stack pointer, SP
- Link register, LR (ARM r14)
- PC
- CPSR

There are banked registers SPs, LRs and SPSRs for each privileged mode (for more details see the ARM9EJ-S Technical Reference Manual, revision r1p2 page 2-12).

9.4.7.1 *Status Registers*

The ARM9EJ-S core contains one CPSR, and five SPSRs for exception handlers to use. The program status registers:

- hold information about the most recently performed ALU operation
- control the enabling and disabling of interrupts
- set the processor operation mode

Figure 9-2. Status Register Format

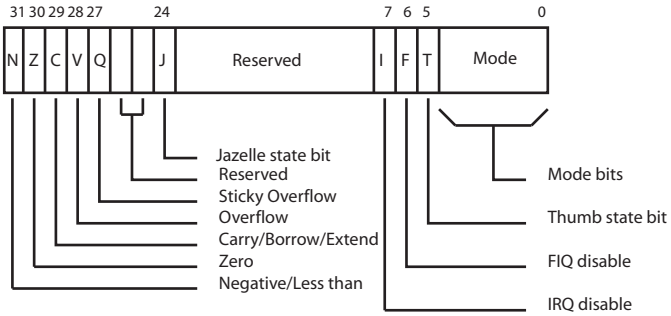

Figure 9-2 shows the status register format, where:

- N: Negative, Z: Zero, C: Carry, and V: Overflow are the four ALU flags
- The Sticky Overflow (Q) flag can be set by certain multiply and fractional arithmetic instructions like QADD, QDADD, QSUB, QDSUB, SMLAxy, and SMLAWy needed to achieve DSP operations.
  The Q flag is sticky in that, when set by an instruction, it remains set until explicitly cleared by an MSR instruction writing to the CPSR. Instructions cannot execute conditionally on the status of the Q flag.
- The J bit in the CPSR indicates when the ARM9EJ-S core is in Jazelle state, where:
  - J = 0: The processor is in ARM or Thumb state, depending on the T bit
  - J = 1: The processor is in Jazelle state.
- Mode: five bits to encode the current processor mode

9.4.7.2 *Exceptions*

9.4.7.3 *Exception Types and Priorities*

The ARM9EJ-S supports five types of exceptions. Each type drives the ARM9EJ-S in a privileged mode. The types of exceptions are:

- Fast interrupt (FIQ)
- Normal interrupt (IRQ)
- Data and Prefetched aborts (Abort)
- Undefined instruction (Undefined)
- Software interrupt and Reset (Supervisor)

When an exception occurs, the banked version of R14 and the SPSR for the exception mode are used to save the state.

More than one exception can happen at a time, therefore the ARM9EJ-S takes the arisen exceptions according to the following priority order:

- Reset (highest priority)
- Data Abort
- FIQ
- IRQ
- Prefetch Abort
- BKPT, Undefined instruction, and Software Interrupt (SWI) (Lowest priority)

The BKPT, or Undefined instruction, and SWI exceptions are mutually exclusive.

Note that there is one exception in the priority scheme: when FIQs are enabled and a Data Abort occurs at the same time as an FIQ, the ARM9EJ-S core enters the Data Abort handler, and proceeds immediately to FIQ vector. A normal return from the FIQ causes the Data Abort handler to resume execution. Data Aborts must have higher priority than FIQs to ensure that the transfer error does not escape detection.

9.4.7.4 *Exception Modes and Handling*

Exceptions arise whenever the normal flow of a program must be halted temporarily, for example, to service an interrupt from a peripheral.

When handling an ARM exception, the ARM9EJ-S core performs the following operations:

1. Preserves the address of the next instruction in the appropriate Link Register that corresponds to the new mode that has been entered. When the exception entry is from:
   - ARM and Jazelle states, the ARM9EJ-S copies the address of the next instruction into LR (current PC(r15) + 4 or PC + 8 depending on the exception).
   - THUMB state, the ARM9EJ-S writes the value of the PC into LR, offset by a value (current PC + 2, PC + 4 or PC + 8 depending on the exception) that causes the program to resume from the correct place on return.
2. Copies the CPSR into the appropriate SPSR.
3. Forces the CPSR mode bits to a value that depends on the exception.
4. Forces the PC to fetch the next instruction from the relevant exception vector.

The register r13 is also banked across exception modes to provide each exception handler with private stack pointer.

The ARM9EJ-S can also set the interrupt disable flags to prevent otherwise unmanageable nesting of exceptions.

When an exception has completed, the exception handler must move both the return value in the banked LR minus an offset to the PC and the SPSR to the CPSR. The offset value varies according to the type of exception. This action restores both PC and the CPSR.

The fast interrupt mode has seven private registers r8 to r14 (banked registers) to reduce or remove the requirement for register saving which minimizes the overhead of context switching.

The Prefetch Abort is one of the aborts that indicates that the current memory access cannot be completed. When a Prefetch Abort occurs, the ARM9EJ-S marks the prefetched instruction as invalid, but does not take the exception until the instruction reaches the Execute stage in the pipeline. If the instruction is not executed, for example because a branch occurs while it is in the pipeline, the abort does not take place.

The breakpoint (BKPT) instruction is a new feature of ARM9EJ-S that is destined to solve the problem of the Prefetch Abort. A breakpoint instruction operates as though the instruction caused a Prefetch Abort.
A breakpoint instruction does not cause the ARM9EJ-S to take the Prefetch Abort exception until the instruction reaches the Execute stage of the pipeline. If the instruction is not executed, for example because a branch occurs while it is in the pipeline, the breakpoint does not take place.

9.4.8 ARM Instruction Set Overview

The ARM instruction set is divided into:

- Branch instructions
- Data processing instructions
- Status register transfer instructions
- Load and Store instructions
- Coprocessor instructions
- Exception-generating instructions

ARM instructions can be executed conditionally. Every instruction contains a 4-bit condition code field (bits[31:28]).

For further details, see the ARM Technical Reference Manual.

Table 9-2 gives the ARM instruction mnemonic list.

Table 9-2. ARM Instruction Mnemonic List

Mnemonic	Operation	Mnemonic	Operation
MOV	Move	MVN	Move Not
ADD	Add	ADC	Add with Carry
SUB	Subtract	SBC	Subtract with Carry
RSB	Reverse Subtract	RSC	Reverse Subtract with Carry
CMP	Compare	CMN	Compare Negated
TST	Test	TEQ	Test Equivalence
AND	Logical AND	BIC	Bit Clear
EOR	Logical Exclusive OR	ORR	Logical (inclusive) OR
MUL	Multiply	MLA	Multiply Accumulate
SMULL	Sign Long Multiply	UMULL	Unsigned Long Multiply
SMLAL	Signed Long Multiply Accumulate	UMLAL	Unsigned Long Multiply Accumulate
MSR	Move to Status Register	MRS	Move From Status Register
B	Branch	BL	Branch and Link
BX	Branch and Exchange	SWI	Software Interrupt
LDR	Load Word	STR	Store Word
LDRSH	Load Signed Halfword		
LDRSB	Load Signed Byte		
LDRH	Load Half Word	STRH	Store Half Word
LDRB	Load Byte	STRB	Store Byte
LDRBT	Load Register Byte with Translation	STRBT	Store Register Byte with Translation
LDRT	Load Register with Translation	STRT	Store Register with Translation
LDM	Load Multiple	STM	Store Multiple
SWP	Swap Word	SWPB	Swap Byte
MCR	Move To Coprocessor	MRC	Move From Coprocessor
LDC	Load To Coprocessor	STC	Store From Coprocessor
CDP	Coprocessor Data Processing		

9.4.9 New ARM Instruction Set

.

Table 9-3. New ARM Instruction Mnemonic List

Mnemonic	Operation
BXJ	Branch and exchange to Java
BLX [(1)]	Branch, Link and exchange
SMLAxy	Signed Multiply Accumulate 16 * 16 bit
SMLAL	Signed Multiply Accumulate Long
SMLAWy	Signed Multiply Accumulate 32 * 16 bit
SMULxy	Signed Multiply 16 * 16 bit
SMULWy	Signed Multiply 32 * 16 bit
QADD	Saturated Add
QDADD	Saturated Add with Double
QSUB	Saturated subtract
QDSUB	Saturated Subtract with double

Mnemonic	Operation
MRRC	Move double from coprocessor
MCR2	Alternative move of ARM reg to coprocessor
MCRR	Move double to coprocessor
CDP2	Alternative Coprocessor Data Processing
BKPT	Breakpoint
PLD	Soft Preload, Memory prepare to load from address
STRD	Store Double
STC2	Alternative Store from Coprocessor
LDRD	Load Double
LDC2	Alternative Load to Coprocessor
CLZ	Count Leading Zeroes

Notes: 1. A Thumb BLX contains two consecutive Thumb instructions, and takes four cycles.

9.4.10 Thumb Instruction Set Overview

The Thumb instruction set is a re-encoded subset of the ARM instruction set.

The Thumb instruction set is divided into:

- Branch instructions
- Data processing instructions
- Load and Store instructions

- Load and Store multiple instructions
- Exception-generating instruction

Table 5 shows the Thumb instruction set, for further details, see the ARM Technical Reference Manual.

Table 9-4 gives the Thumb instruction mnemonic list.

Table 9-4. Thumb Instruction Mnemonic List

Mnemonic	Operation
MOV	Move
ADD	Add
SUB	Subtract
CMP	Compare
TST	Test
AND	Logical AND

Mnemonic	Operation
MVN	Move Not
ADC	Add with Carry
SBC	Subtract with Carry
CMN	Compare Negated
NEG	Negate
BIC	Bit Clear

Table 9-4. Thumb Instruction Mnemonic List (Continued)

Mnemonic	Operation
EOR	Logical Exclusive OR
LSL	Logical Shift Left
ASR	Arithmetic Shift Right
MUL	Multiply
B	Branch
BX	Branch and Exchange
LDR	Load Word
LDRH	Load Half Word
LDRB	Load Byte
LDRSH	Load Signed Halfword
LDMIA	Load Multiple
PUSH	Push Register to stack
BCC	Conditional Branch

Mnemonic	Operation
ORR	Logical (inclusive) OR
LSR	Logical Shift Right
ROR	Rotate Right
BLX	Branch, Link, and Exchange
BL	Branch and Link
SWI	Software Interrupt
STR	Store Word
STRH	Store Half Word
STRB	Store Byte
LDRSB	Load Signed Byte
STMIA	Store Multiple
POP	Pop Register from stack
BKPT	Breakpoint

9.5 CP15 Coprocessor

Coprocessor 15, or System Control Coprocessor CP15, is used to configure and control all the items in the list below:

- ARM9EJ-S
- Caches (ICache, DCache and write buffer)
- TCM
- MMU
- Other system options

To control these features, CP15 provides 16 additional registers. See Table 9-5.

Table 9-5. CP15 Registers

Register	Name	Read/Write
0	ID Code[1]	Read/Unpredictable
0	Cache type[1]	Read/Unpredictable
0	TCM status[1]	Read/Unpredictable
1	Control	Read/write
2	Translation Table Base	Read/write
3	Domain Access Control	Read/write
4	Reserved	None
5	Data fault Status[1]	Read/write
5	Instruction fault status[1]	Read/write
6	Fault Address	Read/write
7	Cache Operations	Read/Write
8	TLB operations	Unpredictable/Write
9	cache lockdown[2]	Read/write
9	TCM region	Read/write
10	TLB lockdown	Read/write
11	Reserved	None
12	Reserved	None
13	FCSE PID[1]	Read/write
13	Context ID[1]	Read/Write
14	Reserved	None
15	Test configuration	Read/Write

Notes: 1. Register locations 0,5, and 13 each provide access to more than one register. The register accessed depends on the value of the opcode_2 field.

2. Register location 9 provides access to more than one register. The register accessed depends on the value of the CRm field.

9.5.1 CP15 Registers Access

CP15 registers can only be accessed in privileged mode by:

- MCR (Move to Coprocessor from ARM Register) instruction is used to write an ARM register to CP15.
- MRC (Move to ARM Register from Coprocessor) instruction is used to read the value of CP15 to an ARM register.

Other instructions like CDP, LDC, STC can cause an undefined instruction exception.

The assembler code for these instructions is:

```
MCR/MRC{cond} p15, opcode_1, Rd, CRn, CRm, opcode_2.
```

The MCR, MRC instructions bit pattern is shown below:

31	30	29	28	27	26	25	24
cond				1	1	1	0
23	22	21	20	19	18	17	16
opcode_1			L	CRn			
15	14	13	12	11	10	9	8
Rd				1	1	1	1
7	6	5	4	3	2	1	0
opcode_2			1	CRm			

- **CRm[3:0]: Specified Coprocessor Action**

Determines specific coprocessor action. Its value is dependent on the CP15 register used. For details, refer to CP15 specific register behavior.

- **opcode_2[7:5]**

Determines specific coprocessor operation code. By default, set to 0.

- **Rd[15:12]: ARM Register**

Defines the ARM register whose value is transferred to the coprocessor. If R15 is chosen, the result is unpredictable.

- **CRn[19:16]: Coprocessor Register**

Determines the destination coprocessor register.

- **L: Instruction Bit**

0 = MCR instruction

1 = MRC instruction

- **opcode_1[23:20]: Coprocessor Code**

Defines the coprocessor specific code. Value is c15 for CP15.

- **cond [31:28]: Condition**

For more details, see Chapter 2 in ARM926EJ-S TRM.

9.6 Memory Management Unit (MMU)

The ARM926EJ-S processor implements an enhanced ARM architecture v5 MMU to provide virtual memory features required by operating systems like Symbian OS®, Windows CE®, and Linux®. These virtual memory features are memory access permission controls and virtual to physical address translations.

The Virtual Address generated by the CPU core is converted to a Modified Virtual Address (MVA) by the FCSE (Fast Context Switch Extension) using the value in CP15 register13. The MMU translates modified virtual addresses to physical addresses by using a single, two-level page table set stored in physical memory. Each entry in the set contains the access permissions and the physical address that correspond to the virtual address.

The first level translation tables contain 4096 entries indexed by bits [31:20] of the MVA. These entries contain a pointer to either a 1 MB section of physical memory along with attribute information (access permissions, domain, etc.) or an entry in the second level translation tables; coarse table and fine table.

The second level translation tables contain two subtables, coarse table and fine table. An entry in the coarse table contains a pointer to both large pages and small pages along with access permissions. An entry in the fine table contains a pointer to large, small and tiny pages.

Table 7 shows the different attributes of each page in the physical memory.

Table 9-6. Mapping Details

Mapping Name	Mapping Size	Access Permission By	Subpage Size
Section	1M byte	Section	-
Large Page	64K bytes	4 separated subpages	16K bytes
Small Page	4K bytes	4 separated subpages	1K byte
Tiny Page	1K byte	Tiny Page	-

The MMU consists of:

- Access control logic
- Translation Look-aside Buffer (TLB)
- Translation table walk hardware

9.6.1 Access Control Logic

The access control logic controls access information for every entry in the translation table. The access control logic checks two pieces of access information: domain and access permissions. The domain is the primary access control mechanism for a memory region; there are 16 of them. It defines the conditions necessary for an access to proceed. The domain determines whether the access permissions are used to qualify the access or whether they should be ignored.

The second access control mechanism is access permissions that are defined for sections and for large, small and tiny pages. Sections and tiny pages have a single set of access permissions whereas large and small pages can be associated with 4 sets of access permissions, one for each subpage (quarter of a page).

9.6.2 Translation Look-aside Buffer (TLB)

The Translation Look-aside Buffer (TLB) caches translated entries and thus avoids going through the translation process every time. When the TLB contains an entry for the MVA (Modified Virtual Address), the access control logic determines if the access is permitted and outputs the appropriate physical address corresponding to the MVA. If access is not permitted, the MMU signals the CPU core to abort.

If the TLB does not contain an entry for the MVA, the translation table walk hardware is invoked to retrieve the translation information from the translation table in physical memory.

9.6.3 Translation Table Walk Hardware

The translation table walk hardware is a logic that traverses the translation tables located in physical memory, gets the physical address and access permissions and updates the TLB.

The number of stages in the hardware table walking is one or two depending whether the address is marked as a section-mapped access or a page-mapped access.

There are three sizes of page-mapped accesses and one size of section-mapped access. Page-mapped accesses are for large pages, small pages and tiny pages. The translation process always begins with a level one fetch. A section-mapped access requires only a level one fetch, but a page-mapped access requires an additional level two fetch. For further details on the MMU, please refer to chapter 3 in ARM926EJ-S Technical Reference Manual.

9.6.4 MMU Faults

The MMU generates an abort on the following types of faults:

- Alignment faults (for data accesses only)
- Translation faults
- Domain faults
- Permission faults

The access control mechanism of the MMU detects the conditions that produce these faults. If the fault is a result of memory access, the MMU aborts the access and signals the fault to the CPU core.The MMU retains status and address information about faults generated by the data accesses in the data fault status register and fault address register. It also retains the status of faults generated by instruction fetches in the instruction fault status register.

The fault status register (register 5 in CP15) indicates the cause of a data or prefetch abort, and the domain number of the aborted access when it happens. The fault address register (register 6 in CP15) holds the MVA associated with the access that caused the Data Abort. For further details on MMU faults, please refer to chapter 3 in ARM926EJ-S Technical Reference Manual.

9.7 Caches and Write Buffer

The ARM926EJ-S contains a 32K Byte Instruction Cache (ICache), a 32K Byte Data Cache (DCache), and a write buffer. Although the ICache and DCache share common features, each still has some specific mechanisms.

The caches (ICache and DCache) are four-way set associative, addressed, indexed and tagged using the Modified Virtual Address (MVA), with a cache line length of eight words with two dirty bits for the DCache. The ICache and DCache provide mechanisms for cache lockdown, cache pollution control, and line replacement.

A new feature is now supported by ARM926EJ-S caches called allocate on read-miss commonly known as wrapping. This feature enables the caches to perform critical word first cache refilling. This means that when a request for a word causes a read-miss, the cache performs an AHB access. Instead of loading the whole line (eight words), the cache loads the critical word first, so the processor can reach it quickly, and then the remaining words, no matter where the word is located in the line.

The caches and the write buffer are controlled by the CP15 register 1 (Control), CP15 register 7 (cache operations) and CP15 register 9 (cache lockdown).

9.7.1 Instruction Cache (ICache)

The ICache caches fetched instructions to be executed by the processor. The ICache can be enabled by writing 1 to I bit of the CP15 Register 1 and disabled by writing 0 to this same bit.

When the MMU is enabled, all instruction fetches are subject to translation and permission checks. If the MMU is disabled, all instructions fetches are cachable, no protection checks are made and the physical address is flat-mapped to the modified virtual address. With the MVA use disabled, context switching incurs ICache cleaning and/or invalidating.

When the ICache is disabled, all instruction fetches appear on external memory (AHB) (see Tables 4-1 and 4-2 in page 4-4 in ARM926EJ-S TRM).

On reset, the ICache entries are invalidated and the ICache is disabled. For best performance, ICache should be enabled as soon as possible after reset.

9.7.2 Data Cache (DCache) and Write Buffer

ARM926EJ-S includes a DCache and a write buffer to reduce the effect of main memory bandwidth and latency on data access performance. The operations of DCache and write buffer are closely connected.

9.7.2.1 DCache

The DCache needs the MMU to be enabled. All data accesses are subject to MMU permission and translation checks. Data accesses that are aborted by the MMU do not cause linefills or data accesses to appear on the AMBA ASB interface. If the MMU is disabled, all data accesses are noncachable, nonbufferable, with no protection checks, and appear on the AHB bus. All addresses are flat-mapped, VA = MVA = PA, which incurs DCache cleaning and/or invalidating every time a context switch occurs.

The DCache stores the Physical Address Tag (PA Tag) from which every line was loaded and uses it when writing modified lines back to external memory. This means that the MMU is not involved in write-back operations.

Each line (8 words) in the DCache has two dirty bits, one for the first four words and the other one for the second four words. These bits, if set, mark the associated half-lines as dirty. If the cache line is replaced due to a linefill or a cache clean operation, the dirty bits are used to decide whether all, half or none is written back to memory.

DCache can be enabled or disabled by writing either 1 or 0 to bit C in register 1 of CP15 (see Tables 4-3 and 4-4 on page 4-5 in ARM926EJ-S TRM).

The DCache supports write-through and write-back cache operations, selected by memory region using the C and B bits in the MMU translation tables.

The DCache contains an eight data word entry, single address entry write-back buffer used to hold write-back data for cache line eviction or cleaning of dirty cache lines.

The Write Buffer can hold up to 16 words of data and four separate addresses. DCache and Write Buffer operations are closely connected as their configuration is set in each section by the page descriptor in the MMU translation table.

9.7.2.2 *Write Buffer*

The ARM926EJ-S contains a write buffer that has a 16-word data buffer and a four- address buffer. The write buffer is used for all writes to a bufferable region, write-through region and write-back region. It also allows to avoid stalling the processor when writes to external memory are performed. When a store occurs, data is written to the write buffer at core speed (high speed). The write buffer then completes the store to external memory at bus speed (typically slower than the core speed). During this time, the ARM9EJ-S processor can preform other tasks.

DCache and Write Buffer support write-back and write-through memory regions, controlled by C and B bits in each section and page descriptor within the MMU translation tables.

9.7.2.3 *Write-though Operation*

When a cache write hit occurs, the DCache line is updated. The updated data is then written to the write buffer which transfers it to external memory.

When a cache write miss occurs, a line, chosen by round robin or another algorithm, is stored in the write buffer which transfers it to external memory.

9.7.2.4 *Write-back Operation*

When a cache write hit occurs, the cache line or half line is marked as dirty, meaning that its contents are not up-to-date with those in the external memory.

When a cache write miss occurs, a line, chosen by round robin or another algorithm, is stored in the write buffer which transfers it to external memory.

9.8 Tightly-Coupled Memory Interface

9.8.1 TCM Description

The ARM926EJ-S processor features a Tightly-coupled Memory (TCM) interface, which enables separate instruction and data TCMs (ITCM and DTCM) to be directly reached by the processor. TCMs are used to store real-time and performance critical code, they also provide a DMA support mechanism. Unlike AHB accesses to external memories, accesses to TCMs are fast and deterministic and do not incur bus penalties.

The user has the possibility to independently configure each TCM size with values within the following ranges, [0K Byte, 64K Bytes] for ITCM size and [0K Byte, 64K Bytes] for DTCM size.

TCMs can be configured by two means: HMATRIX TCM register and TCM region register (register 9) in CP15 and both steps should be performed. HMATRIX TCM register sets TCM size whereas TCM region register (register 9) in CP15 maps TCMs and enables them.

The data side of the ARM9EJ-S core is able to access the ITCM. This is necessary to enable code to be loaded into the ITCM, for SWI and emulated instruction handlers, and for accesses to PC-relative literal pools.

9.8.2 Enabling and Disabling TCMs

Prior to any enabling step, the user should configure the TCM sizes in HMATRIX TCM register. Then enabling TCMs is performed by using TCM region register (register 9) in CP15. The user should use the same sizes as those put in HMATRIX TCM register. For further details and programming tips, please refer to chapter 2.3 in ARM926EJ-S TRM.

9.8.3 TCM Mapping

The TCMs can be located anywhere in the memory map, with a single region available for ITCM and a separate region available for DTCM. The TCMs are physically addressed and can be placed anywhere in physical address space. However, the base address of a TCM must be aligned to its size, and the DTCM and ITCM regions must not overlap. TCM mapping is performed by using TCM region register (register 9) in CP15. The user should input the right mapping address for TCMs.

9.9 Bus Interface Unit

The ARM926EJ-S features a Bus Interface Unit (BIU) that arbitrates and schedules AHB requests. The BIU implements a multi-layer AHB, based on the AHB-Lite protocol, that enables parallel access paths between multiple AHB masters and slaves in a system. This is achieved by using a more complex interconnection matrix and gives the benefit of increased overall bus bandwidth, and a more flexible system architecture.

The multi-master bus architecture has a number of benefits:

- It allows the development of multi-master systems with an increased bus bandwidth and a flexible architecture.
- Each AHB layer becomes simple because it only has one master, so no arbitration or master-to-slave muxing is required. AHB layers, implementing AHB-Lite protocol, do not have to support request and grant, nor do they have to support retry and split transactions.
- The arbitration becomes effective when more than one master wants to access the same slave simultaneously.

9.9.1 Supported Transfers

The ARM926EJ-S processor performs all AHB accesses as single word, bursts of four words, or bursts of eight words. Any ARM9EJ-S core request that is not 1, 4, 8 words in size is split into packets of these sizes. Note that the Atmel bus is AHB-Lite protocol compliant, hence it does not support split and retry requests.

Table 8 gives an overview of the supported transfers and different kinds of transactions they are used for.

Table 9-7. Supported Transfers

HBurst[2:0]	Description	
SINGLE	Single transfer	Single transfer of word, half word, or byte: • Data write (NCNB, NCB, WT, or WB that has missed in DCache) • Data read (NCNB or NCB) • NC instruction fetch (prefetched and non-prefetched) • Page table walk read
INCR4	Four-word incrementing burst	Half-line cache write-back, Instruction prefetch, if enabled. Four-word burst NCNB, NCB, WT, or WB write.
INCR8	Eight-word incrementing burst	Full-line cache write-back, eight-word burst NCNB, NCB, WT, or WB write.
WRAP8	Eight-word wrapping burst	Cache linefill

9.9.2 Thumb Instruction Fetches

All instructions fetches, regardless of the state of ARM9EJ-S core, are made as 32-bit accesses on the AHB. If the ARM9EJ-S is in Thumb state, then two instructions can be fetched at a time.

9.9.3 Address Alignment

The ARM926EJ-S BIU performs address alignment checking and aligns AHB addresses to the necessary boundary. 16-bit accesses are aligned to halfword boundaries, and 32-bit accesses are aligned to word boundaries.

10. SAM9G45 Debug and Test

10.1 Description

The SAM9G45 features a number of complementary debug and test capabilities. A common JTAG/ICE (In-Circuit Emulator) port is used for standard debugging functions, such as downloading code and single-stepping through programs. The Debug Unit provides a two-pin UART that can be used to upload an application into internal SRAM. It manages the interrupt handling of the internal COMMTX and COMMRX signals that trace the activity of the Debug Communication Channel.

A set of dedicated debug and test input/output pins gives direct access to these capabilities from a PC-based test environment.

10.2 Embedded Characteristics

- ARM926 Real-time In-circuit Emulator
  - Two real-time Watchpoint Units
  - Two Independent Registers: Debug Control Register and Debug Status Register
  - Test Access Port Accessible through JTAG Protocol
  - Debug Communications Channel
- Debug Unit
  - Two-pin UART
  - Debug Communication Channel Interrupt Handling
  - Chip ID Register
- IEEE1149.1 JTAG Boundary-scan on All Digital Pins.

10.3 Block Diagram

Figure 10-1. Debug and Test Block Diagram

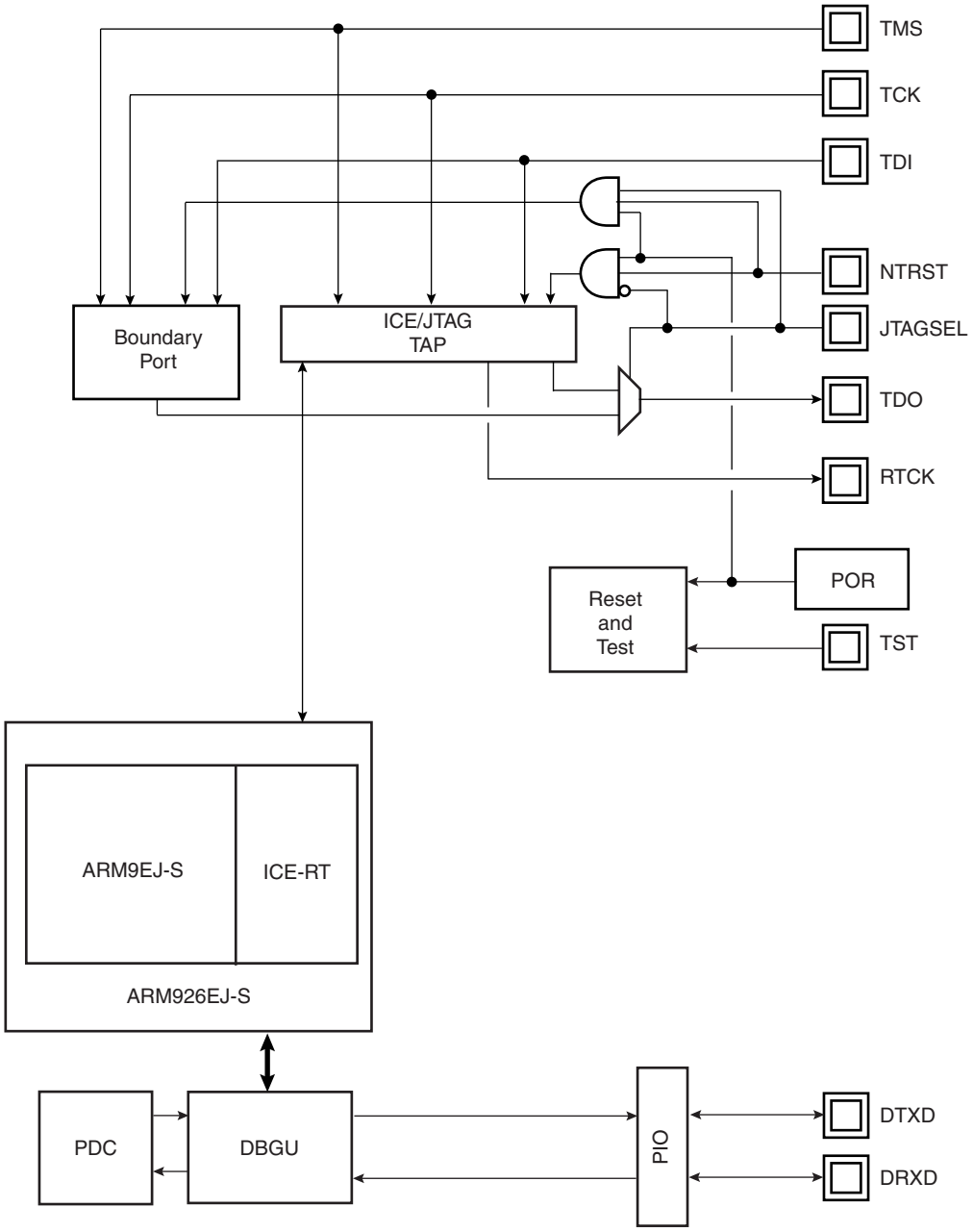

TAP: Test Access Port

10.4 Application Examples

10.4.1 Debug Environment

Figure 10-2 on page 53 shows a complete debug environment example. The ICE/JTAG interface is used for standard debugging functions, such as downloading code and single-stepping through the program. A software debugger running on a personal computer provides the user interface for configuring a Trace Port interface utilizing the ICE/JTAG interface.

Figure 10-2. Application Debug and Trace Environment Example

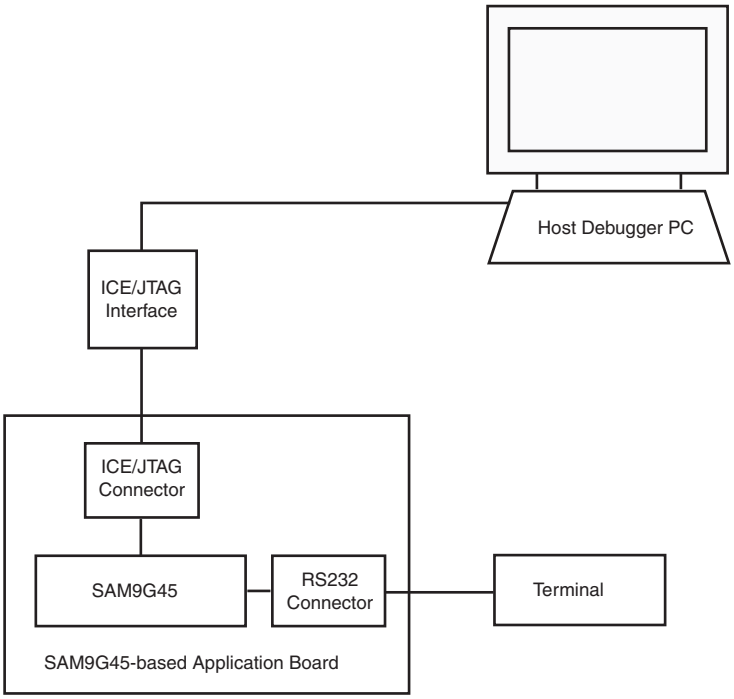

10.4.2 Test Environment

Figure 10-3 on page 54 shows a test environment example. Test vectors are sent and interpreted by the tester. In this example, the “board in test” is designed using a number of JTAG-compliant devices. These devices can be connected to form a single scan chain.

Figure 10-3. Application Test Environment Example

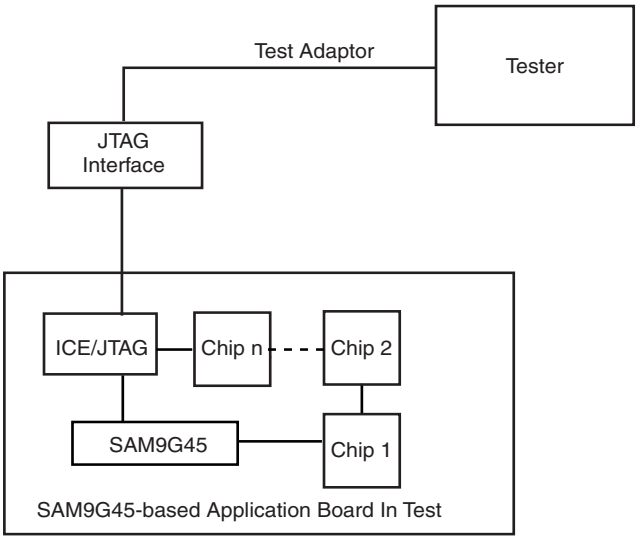

10.5 Debug and Test Pin Description

Table 10-1. Debug and Test Pin List

Pin Name	Function	Type	Active Level
Reset/Test			
NRST	Microcontroller Reset	Input/Output	Low
TST	Test Mode Select	Input	High
ICE and JTAG			
NTRST	Test Reset Signal	Input	Low
TCK	Test Clock	Input	
TDI	Test Data In	Input	
TDO	Test Data Out	Output	
TMS	Test Mode Select	Input	
RTCK	Returned Test Clock	Output	
JTAGSEL	JTAG Selection	Input	
Debug Unit			
DRXD	Debug Receive Data	Input	
DTXD	Debug Transmit Data	Output	

10.6 Functional Description

10.6.1 Test Pin

One dedicated pin, TST, is used to define the device operating mode. The user must make sure that this pin is tied at low level to ensure normal operating conditions. Other values associated with this pin are reserved for manufacturing test.

10.6.2 EmbeddedICE

The ARM9EJ-S EmbeddedICE-RT™ is supported via the ICE/JTAG port. It is connected to a host computer via an ICE interface. Debug support is implemented using an ARM9EJ-S core embedded within the ARM926EJ-S. The internal state of the ARM926EJ-S is examined through an ICE/JTAG port which allows instructions to be serially inserted into the pipeline of the core without using the external data bus. Therefore, when in debug state, a store-multiple (STM) can be inserted into the instruction pipeline. This exports the contents of the ARM9EJ-S registers. This data can be serially shifted out without affecting the rest of the system.

There are two scan chains inside the ARM9EJ-S processor which support testing, debugging, and programming of the EmbeddedICE-RT. The scan chains are controlled by the ICE/JTAG port.

EmbeddedICE mode is selected when JTAGSEL is low. It is not possible to switch directly between ICE and JTAG operations. A chip reset must be performed after JTAGSEL is changed.

For further details on the EmbeddedICE-RT, see the ARM document:

ARM9EJ-S Technical Reference Manual (DDI 0222A).

10.6.3 JTAG Signal Description

TMS is the Test Mode Select input which controls the transitions of the test interface state machine.

TDI is the Test Data Input line which supplies the data to the JTAG registers (Boundary Scan Register, Instruction Register, or other data registers).

TDO is the Test Data Output line which is used to serially output the data from the JTAG registers to the equipment controlling the test. It carries the sampled values from the boundary scan chain (or other JTAG registers) and propagates them to the next chip in the serial test circuit.

NTRST (optional in IEEE Standard 1149.1) is a Test-ReSeT input which is mandatory in ARM cores and used to reset the debug logic. On Atmel ARM926EJ-S-based cores, NTRST is a Power On Reset output. It is asserted on power on. If necessary, the user can also reset the debug logic with the NTRST pin assertion during 2.5 MCK periods.

TCK is the Test ClocK input which enables the test interface. TCK is pulsed by the equipment controlling the test and not by the tested device. It can be pulsed at any frequency. Note the maximum JTAG clock rate on ARM926EJ-S cores is 1/6th the clock of the CPU. This gives 5.45 kHz maximum initial JTAG clock rate for an ARM9E running from the 32.768 kHz slow clock.

RTCK is the Return Test Clock. Not an IEEE Standard 1149.1 signal added for a better clock handling by emulators. From some ICE Interface probes, this return signal can be used to synchronize the TCK clock and take not care about the given ratio between the ICE Interface clock and system clock equal to 1/6th. This signal is only available in JTAG ICE Mode and not in boundary scan mode.

10.6.4 Debug Unit

The Debug Unit provides a two-pin (DXRD and TXRD) USART that can be used for several debug and trace purposes and offers an ideal means for in-situ programming solutions and debug monitor communication. Moreover, the association with two peripheral data controller channels permits packet handling of these tasks with processor time reduced to a minimum.

The Debug Unit also manages the interrupt handling of the COMMTX and COMMRX signals that come from the ICE and that trace the activity of the Debug Communication Channel.The Debug Unit allows blockage of access to the system through the ICE interface.

A specific register, the Debug Unit Chip ID Register, gives information about the product version and its internal configuration.

The SAM9G45 Debug Unit Chip ID value is 0x819B 05A2 and the extended ID is 0x00000004 on 32-bit width.

For further details on the Debug Unit, see the Debug Unit section.

10.6.5 IEEE 1149.1 JTAG Boundary Scan

IEEE 1149.1 JTAG Boundary Scan allows pin-level access independent of the device packaging technology.

IEEE 1149.1 JTAG Boundary Scan is enabled when JTAGSEL is high. The SAMPLE, EXTEST and BYPASS functions are implemented. In ICE debug mode, the ARM processor responds with a non-JTAG chip ID that identifies the processor to the ICE system. This is not IEEE 1149.1 JTAG-compliant.

It is not possible to switch directly between JTAG and ICE operations. A chip reset must be performed after JTAGSEL is changed.

A Boundary-scan Descriptor Language (BSDL) file is provided to set up test.

10.6.6 JID Code Register

Access: Read-only

31	30	29	28	27	26	25	24
VERSION				PART NUMBER			

23	22	21	20	19	18	17	16
PART NUMBER							

15	14	13	12	11	10	9	8
PART NUMBER				MANUFACTURER IDENTITY			

7	6	5	4	3	2	1	0
MANUFACTURER IDENTITY							1

- **VERSION[31:28]: Product Version Number**

Set to 0x0.

- **PART NUMBER[27:12]: Product Part Number**

Product part Number is 5B27

- **MANUFACTURER IDENTITY[11:1]**

Set to 0x01F.

Bit[0] required by IEEE Std. 1149.1.

Set to 0x1.

JTAG ID Code value is 05B2_703F.

11. Boot Strategies

The system always boots at address 0x0. To ensure maximum boot possibilities the memory layout can be changed with two parameters.

- REMAP allows the user to layout the internal SRAM bank to 0x0 to ease the development. This is done by software once the system has boot.
- BMS allows the user to layout to 0x0, when convenient, the ROM or an external memory. This is done by hardware at reset.

Note: All the memory blocks can always be seen at their specified base addresses that are not concerned by these parameters.

The SAM9G45 manages a boot memory that depends on the level on the BMS pin at reset. The internal memory area mapped between address 0x0 and 0x000F FFFF is reserved to this effect.

If BMS is detected at 0, the boot memory is the memory connected on the Chip Select 0 of the External Bus Interface.

- Boot on on-chip RC
- Boot with the default configuration for the Static Memory Controller, byte select mode, 16-bit data bus, Read/Write controlled by Chip Select, allows boot on 16-bit non-volatile memory.

For optimization purpose, nothing else is done. To speed up the boot sequence user programmed software should perform a complete configuration:

- Enable the 32768 Hz oscillator if best accuracy is needed
- Program the PMC (main oscillator enable or bypass mode)
- Program and Start the PLL
- Reprogram the SMC setup, cycle, hold, mode timings registers for EBI CS0 to adapt them to the new clock
- Switch the system clock to the new value

If BMS is detected at 1, the boot memory is the embedded ROM and the boot program described below is executed.

11.1 Boot Program

The Boot Program is contained in the embedded ROM. It is also called: “Rom Code” or “First level bootloader”. At power on, if the BMS pin is detected at 1, the boot memory is the embedded ROM and the Boot Program is executed.

The Boot Program consists of several steps. First, it performs device initialization. Then it attempts to boot from external non volatile memories (NVM). And finally, if no valid program is found in NVM, it executes a monitor called SAM-BA® Monitor.

11.2 Flow Diagram

The Boot Program implements the algorithm shown below in Figure 11-1.

Figure 11-1. Boot Program Algorithm Flow Diagram

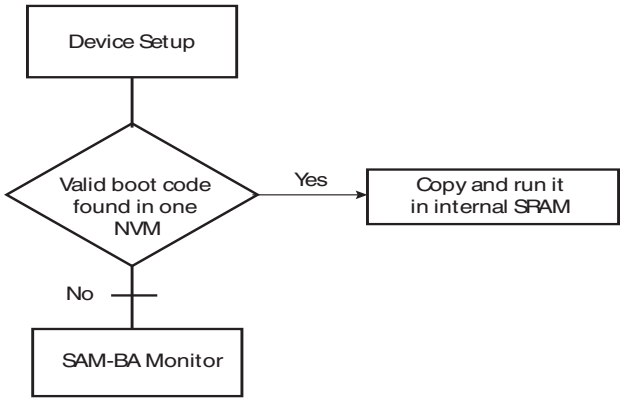

11.3 Device Initialization

11.3.1 Clock at Start Up

At boot start up, the processor clock (PCK) and the master clock (MCK) are found on the slow clock. The slow clock can be an external 32 kHz crystal oscillator or the internal RC oscillator. By default the slow clock is the internal RC oscillator. Its frequency is not precise and is between 20 kHz and 40 kHz. Its start up is much faster than an external 32 kHz quartz. If a battery supplies the backup power and if the external 32 kHz clock was previously started up and selected, the slow clock at boot is the external 32 kHz quartz oscillator. Refer to the Slow Clock Crystal Oscillator description in the Clock Generator section of the datasheet.

11.3.2 Initialization Sequence

Initialization follows the steps described below:

1. **Stack setup** for ARM supervisor mode.

2. **Main Oscillator Detection:** (External crystal or external clock on XIN). The Main Oscillator is disabled at startup (MOSCEN = 0). First it is bypassed (OSCBYPASS set at 1). Then the MAINRDY bit is polled. Since this bit is raised, the Main Clock Frequency field is analyzed (MAINF). If the value is bigger than 16, an external clock connected on XIN is detected. If not, an external quartz connected between XIN and XOUT (whose frequency is unknown at this moment) is detected.

3. **Main Oscillator Enabling**: if an external clock is connected on XIN, the Main Oscillator does not need to be started. Otherwise, the OSCBYPASS bit is not set. The Main Oscillator is enabled (MOSCEN = 1) with the maximum start-up time and the MOSC bit is polled to wait for stabilization.

4. **Main Oscillator Selection**: the Master Clock source is switched from Slow Clock to the Main Oscillator without prescaler. The PMC Status Register is polled to wait for MCK Ready. PCK and MCK are now the Main Oscillator clock.

5. **C variable initialization:** non zero-initialized data are initialized in RAM (copy from ROM to RAM). Zero-initialized data are set to 0 in RAM.

6. PLLA initialization: PLLA is configured to allow communication on the USB link for the SAM-BA Monitor. Its configuration depends on the Main Oscillator source (external clock or crystal) and on its frequency.

Table 11-1. External Clock and Crystal Frequencies allowed for Boot Sequence (in MHz)

Description	4	12	28	Other
Boot on External Memories	Yes	Yes	Yes	No
SAM-BA Monitor through DBGU	Yes	Yes	Yes	No
SAM-BA Monitor through USB	No	Yes	No	No

11.4 NVM Boot

11.4.1 NVM Bootloader Program Description

Figure 11-2. NVM bootloader program diagram

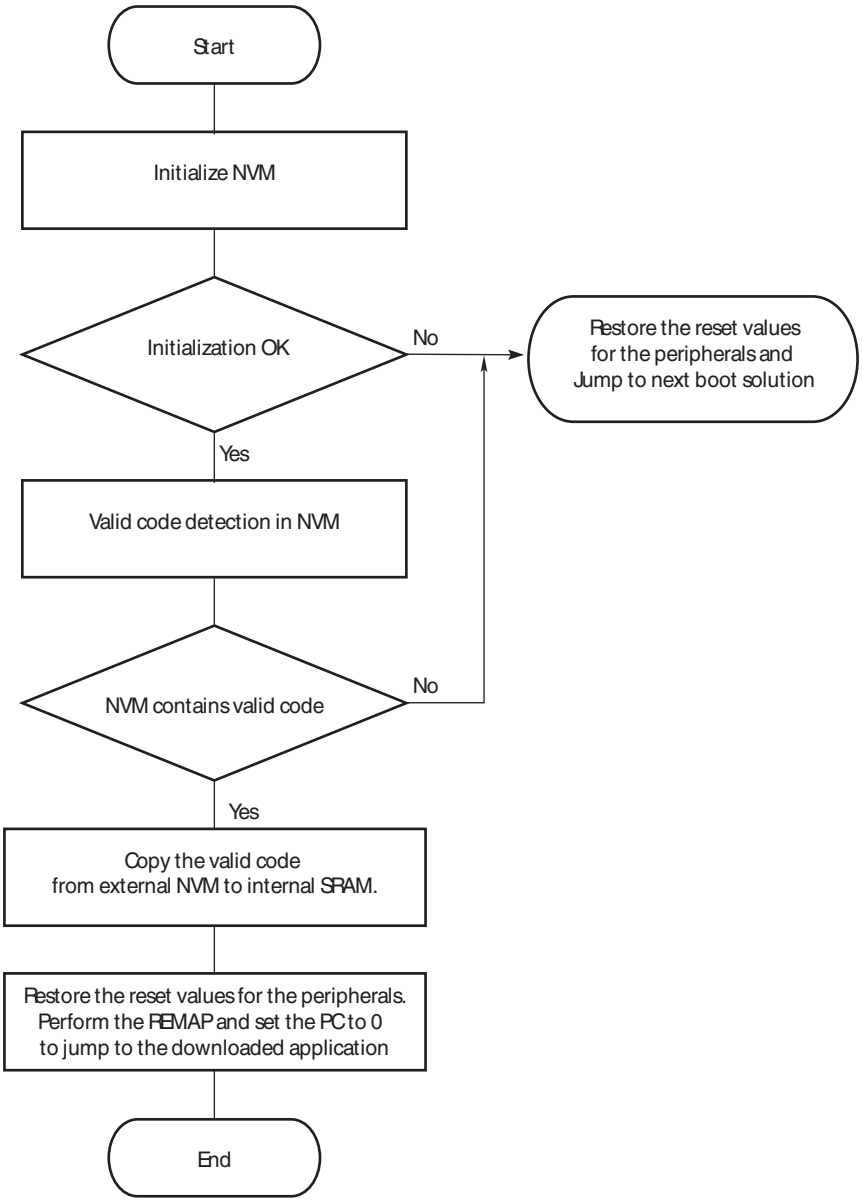

Figure 11-3. Remap Action after Download Completion

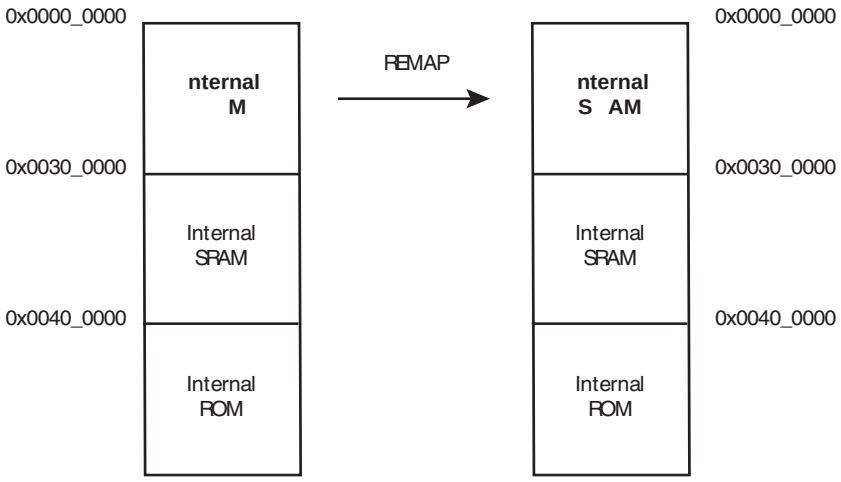

The NVM bootloader program initializes the NVM. It initializes the required PIO. It sets the right peripheral depending on the NVM and tries to access the memory. If the initialization fails, it restores the reset values for the PIO and peripherals and then the next NVM bootloader program is executed.

If the initialization is successful, the NVM bootloader program reads the beginning of the NVM and determines if the NVM contains valid code.

If the NVM does not contain valid code, the NVM bootloader program restores the reset value for the peripherals and then the next NVM bootloader program is executed.

If valid code is found, this code is loaded from NVM into internal SRAM and executed by branching at address 0x0000_0000 after remap. This code may be the application code or a second-level bootloader. All the calls to functions are PC relative and do not use absolute addresses.

11.4.2 Valid Code Detection

There are two kinds of valid code detection. Depending on the NVM bootloader, either one or both of them is used.

11.4.2.1 ARM Exception Vectors Check

The NVM bootloader program reads and analyzes the first 28 bytes corresponding to the first seven ARM exception vectors. Except for the sixth vector, these bytes must implement the ARM instructions for either branch or load PC with PC relative addressing.

Figure 11-4. LDR Opcode

31 28	27 24	23 20	19 16	15 12	11 0
1 1 1 0	0 1 I P	U 1 W 0	Rn	Rd	O set

Figure 11-5. B Opcode

31 28	27 24	23 0
1 1 1 0	1 0 1 0	O set (24 bits)

Unconditional instruction: 0xE for bits 31 to 28

Load PC with PC relative addressing instruction:

- Rn = Rd = PC = 0xF
- I==0 (12-bit immediate value)
- P==1 (pre-indexed)
- U offset added (U==1) or subtracted (U==0)
- W==1

The sixth vector, at offset 0x14, contains the size of the image to download. The user must replace this vector with his/her own vector. This information is described below.

Figure 11-6. Structure of the ARM Vector 6

31	0
Size of the code to download in bytes	

The value has to be smaller than 60 Kbytes. 60 Kbytes is the maximum size for a valid code. This size is the internal SRAM size minus the stack size used by the ROM Code at the end of the internal SRAM.

Example

An example of valid vectors follows:

```
00   ea000006  B      0x20
04   eaffffe   B      0x04
08   ea00002f  B      _main
0c   eaffffe   B      0x0c
10   eaffffe   B      0x10
14   00001234  B      0x14      <- Code size = 4660 bytes < 60 Kbytes
18   eaffffe   B      0x18
```

11.4.2.2 boot.bin file check

The NVM bootloader program looks for a boot.bin file in the root directory of a FAT12/16/32 formatted NVM Flash.

11.4.3 NVM Bootloader Sequence

Figure 11-7. NVM Bootloader Sequence Diagram

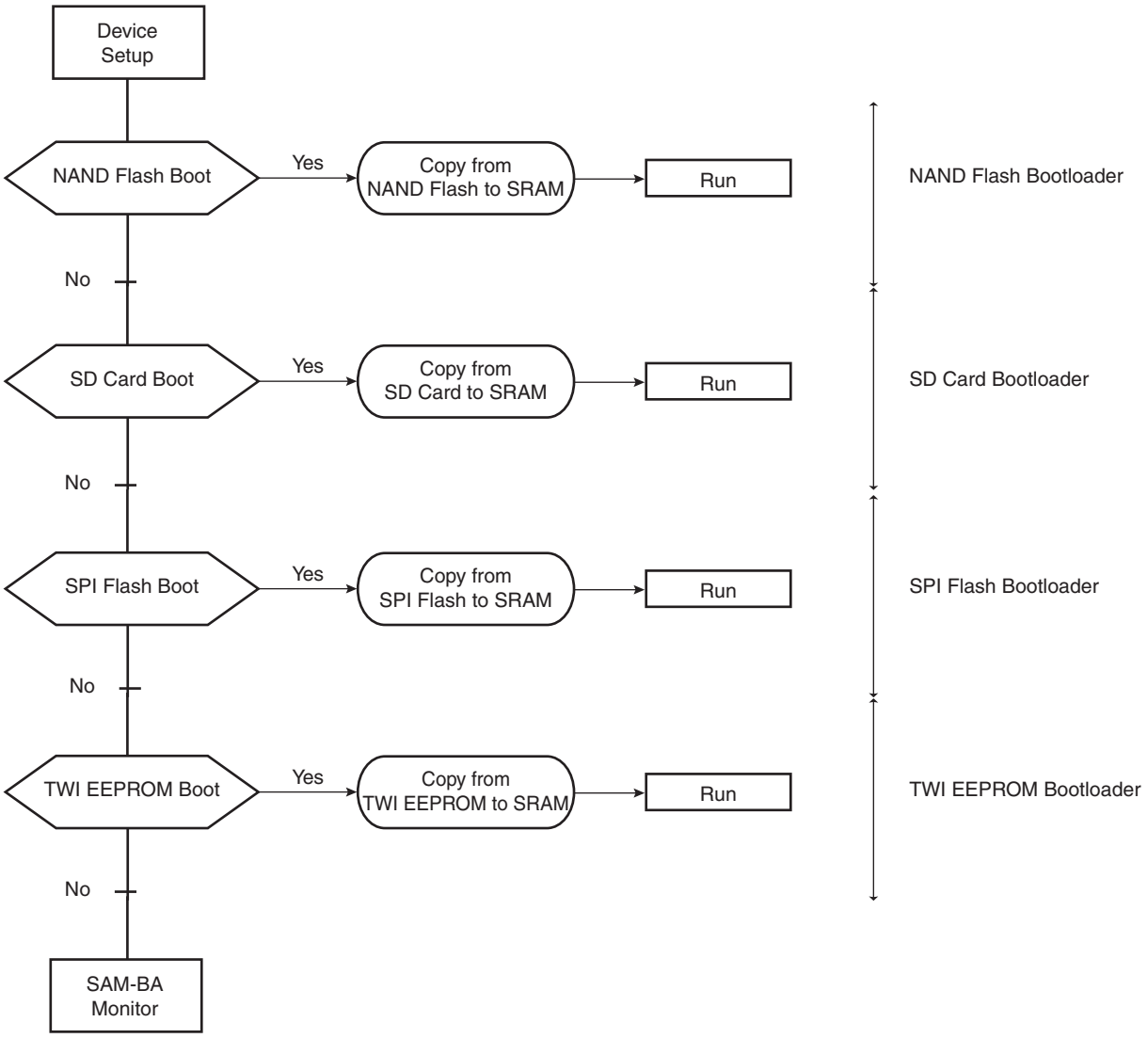

11.4.3.1 NAND Flash Boot

The NAND Flash bootloader program uses the EBI CS3. It uses both valid code detections. First it searches a boot.bin file. Then it analyzes the ARM exception vectors.

The first block must be guaranteed by the manufacturer. There is no ECC check.

After NAND Flash interface configuration, the Manufacturer ID is read. If it is different from 0xFF, the Device ID is read, else, the NAND Flash boot is aborted. The Boot program contains a list of SLC small block Device ID with their characteristics (size, bus width, voltage) (see Table 11-2). If the device ID is not found in this list, the NAND Flash device is considered as an SLC large block and its characteristics are obtained by reading the Extended Device ID byte 3.

Supported NAND Flash Devices

The supported SLC small block NAND Flash devices that are described below inTable 11-2.

Table 11-2. Supported SLC Small Block NAND Flash

Device ID	Size (MBytes)	PageSize (Bytes)	BlockSsize (Bytes)	Bus Width	Voltage (V)
0x6E	1	256	4096	8	5
0x64	2	256	4096	8	5
0x6B	4	512	8196	8	5
0xE8	1	256	4096	8	3.3
0xEC	1	256	4096	8	3.3
0xEA	2	256	4096	8	3.3
0xE3	4	512	8196	8	3.3
0xE5	4	512	8196	8	3.3
0xD6	8	512	8196	8	3.3
0xE6	8	512	8196	8	3.3
0x33	16	512	16384	8	1.8
0x73	16	512	16384	8	3.3
0x43	16	512	16384	16	1.8
0x53	16	512	16384	16	3.3
0x45	32	512	16384	16	1.8
0x55	32	512	16384	16	3.3
0x36	64	512	16384	8	1.8
0x76	64	512	16384	8	3.3
0x46	64	512	16384	16	1.8
0x56	64	512	16384	16	3.3
0x78	128	512	16384	8	1.8
0x79	128	512	16384	8	3.3
0x72	128	512	16384	16	1.8
0x74	128	512	16384	16	3.3

The NAND Flash boot also supports all the SLC large block NAND Flash devices.

11.4.3.2 SD Card Boot

The SD Card bootloader uses MCI0. It uses only one valid code detection. It searches a boot.bin file.

Supported SD Card devices

SD Card Boot supports all SD Card memories compliant with SD Memory Card Specification V2.0. This includes SDHC cards.

11.4.3.3 SPI Flash Boot

Two kinds of SPI Flash are supported, SPI Serial Flash and SPI DataFlash.

The SPI Flash bootloader tries to boot on SPI0 Chip Select 0, first looking for SPI Serial flash, and then for SPI DataFlash.

It uses only one valid code detection: analysis of ARM exception vectors.

The SPI Flash read is done thanks to a Continuous Read command from address 0x0. This command is 0xE8 for DataFlash and 0x0B for Serial Flash devices.

Supported DataFlash Devices

The SPI Flash Boot program supports all Atmel DataFlash devices.

Table 11-3. DataFlash Device

Device	Density	Page Size (bytes)	Number of Pages
AT45DB011	1 Mbit	264	512
AT45DB021	2 Mbits	264	1024
AT45DB041	4 Mbits	264	2048
AT45DB081	8 Mbits	264	4096
AT45DB161	16 Mbits	528	4096
AT45DB321	32 Mbits	528	8192
AT45DB642	64 Mbits	1056	8192

Supported Serial Flash Devices

The SPI Flash Boot program supports all Serial Flash devices.

11.4.3.4 TWI EEPROM Boot

The TWI EEPROM Bootloader uses the TWI0. It uses only one valid code detection. It analyzes the ARM exception vectors.

Supported TWI EEPROM Devices

TWI EEPROM Boot supports all I^2C-compatible TWI EEPROM memories using 7 bits device address 0x50.

11.4.4 Hardware and Software Constraints

The NVM drivers use several PIOs in peripheral mode to communicate with devices. Care must be taken when these PIOs are used by the application. The devices connected could be unintentionally driven at boot time, and electrical conflicts between output pins used by the NVM drivers and the connected devices may occur.

To assure correct functionality, it is recommended to plug in critical devices to other pins not used by NVM.

Table 11-4 contains a list of pins that are driven during the boot program execution. These pins are driven during the boot sequence for a period of less than 1 second if no correct boot program is found.

Before performing the jump to the application in internal SRAM, all the PIOs and peripherals used in the boot program are set to their reset state.

Table 11-4. PIO Driven during Boot Program Execution

NVM Bootloader	Peripheral	Pin	PIO Line
NAND	EBI CS3 SMC	NANDCS	PIOC14
	EBI CS3 SMC	NAND ALE	A21
	EBI CS3 SMC	NAND CLE	A22
	EBI CS3 SMC	Cmd/Addr/Data	D[16:0]

Table 11-4. PIO Driven during Boot Program Execution

NVM Bootloader	Peripheral	Pin	PIO Line
SD Card	MCI0	MCI0_CK	PIOA0
	MCI0	MCI0_CD	PIOA1
	MCI0	MCI0_D0	PIOA2
	MCI0	MCI0_D1	PIOA3
	MCI0	MCI0_D2	PIOA4
	MCI0	MCI0_D3	PIOA5
SPI Flash	SPI0	MOSI	PIOB1
	SPI0	MISO	PIOB0
	SPI0	SPCK	PIOB2
	SPI0	NPCS0	PIOB3
TWI0 EEPROM	TWI0	TWD0	PIOA20
	TWI0	TWCK0	PIOA21
SAM-BA Monitor	DBGU	DRXD	PIOB12
	DBGU	DTXD	PIOB13

11.5 SAM-BA Monitor

If no valid code has been found in NVM during the NVM bootloader sequence, the SAM-BA Monitor program is launched.

The SAM-BA Monitor principle is to:

- Initialize DBGU and USB
- Check if USB Device enumeration has occurred.
- Check if characters have been received on the DBGU.
- Once the communication interface is identified, the application runs in an infinite loop waiting for different commands as listed in Table .

Figure 11-8. SAM-BA Monitor Diagram

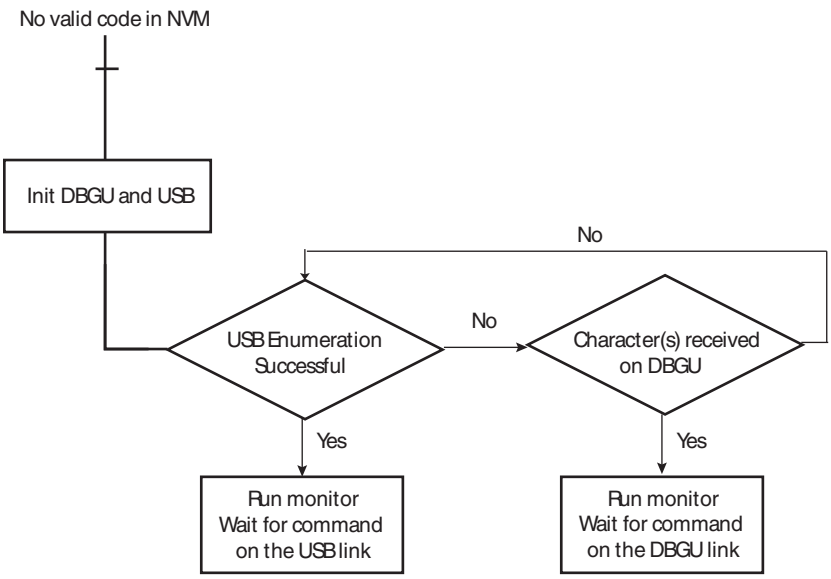

11.5.1 Command List

Table 11-5. Commands Available through the SAM-BA Monitor

Command	Action	Argument(s)	Example
N	Set normal mode	No argument	**N**#
T	Set terminal mode	No argument	**T**#
O	Write a byte	Address, Value#	**O**200001,CA#
o	Read a byte	Address,#	**o**200001,#
H	Write a half word	Address, Value#	**H**200002,CAFE#
h	Read a half word	Address,#	**h**200002,#
W	Write a word	Address, Value#	**W**200000,CAFEDECA#
w	Read a word	Address,#	**w**200000,#
S	Send a file	Address,#	**S**200000,#
R	Receive a file	Address, NbOfBytes#	**R**200000,1234#
G	Go	Address#	**G**200200#
V	Display version	No argument	**V**#

- Mode commands:
  - Normal mode configures SAM-BA Monitor to send / receive data in binary format,
  - Terminal mode configures SAM-BA Monitor to send / receive data in ascii format.
- Write commands: Write a byte (**O**), a halfword (**H**) or a word (**W**) to the target.
  - *Address*: Address in hexadecimal.
  - *Value*: Byte, halfword or word to write in hexadecimal.
  - *Output*: ‘>’.
- Read commands: Read a byte (**o**), a halfword (**h**) or a word (**w**) from the target.

– *Address*: Address in hexadecimal

– *Output*: The byte, halfword or word read in hexadecimal following by ‘>’

- Send a file (**S**): Send a file to a specified address

  – *Address*: Address in hexadecimal

  – *Output*: ‘>’.

Note: There is a time-out on this command which is reached when the prompt ‘>’ appears before the end of the command execution.

- Receive a file (**R**): Receive data into a file from a specified address

  – *Address*: Address in hexadecimal

  – *NbOfBytes*: Number of bytes in hexadecimal to receive

  – *Output*: ‘>’

- Go (**G**): Jump to a specified address and execute the code

  – *Address*: Address to jump in hexadecimal

  – *Output*: ‘>’once returned from the program execution. If the executed program does not handle the link register at its entry and does not return, the prompt will not be displayed.

- Get Version (**V**): Return the Boot Program version

  – *Output*: version, date and time of ROM code followed by the prompt: ‘>’.

11.5.2 DBGU Serial Port

Communication is performed through the DBGU serial port initialized to 115200 Baud, 8 bits of data, no parity, 1 stop bit.

11.5.2.1 Supported External Crystal/External Clocks

The SAM-BA Monitor supports a frequency of 12 MHz to allow DBGU communication for both external crystal and external clock.

11.5.2.2 Xmodem Protocol

The Send and Receive File commands use the Xmodem protocol to communicate. Any terminal performing this protocol can be used to send the application file to the target. The size of the binary file to send depends on the SRAM size embedded in the product. In all cases, the size of the binary file must be lower than the SRAM size because the Xmodem protocol requires some SRAM memory in order to work.

The Xmodem protocol supported is the 128-byte length block. This protocol uses a two-character CRC-16 to guarantee detection of a maximum bit error.

Xmodem protocol with CRC is accurate provided both sender and receiver report successful transmission. Each block of the transfer looks like:

<SOH><blk #><255-blk #><--128 data bytes--><checksum> in which:

– <SOH> = 01 hex

– <blk #> = binary number, starts at 01, increments by 1, and wraps 0FFH to 00H (not to 01)

– <255-blk #> = 1’s complement of the blk#.

– <checksum> = 2 bytes CRC16

Figure 11-9 shows a transmission using this protocol.

Figure 11-9. Xmodem Transfer Example

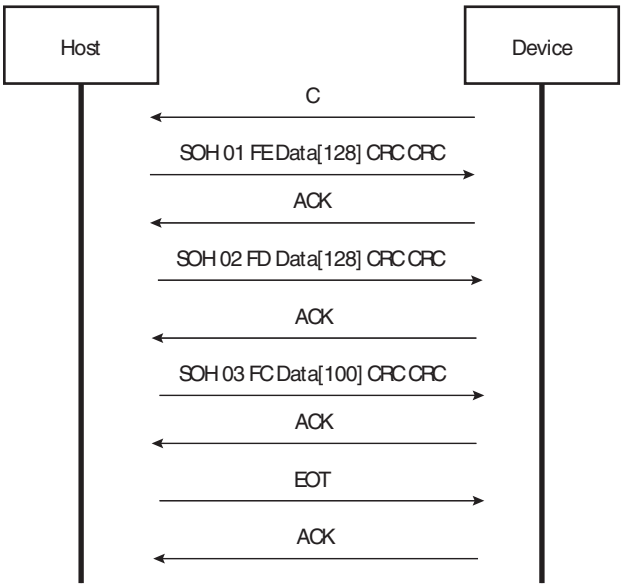

11.5.3 USB Device Port

11.5.3.1 Supported external crystal / external clocks

The only frequency supported by SAM-BA Monitor to allow USB communication is a 12 MHz crystal or external clock.

11.5.3.2 USB class

The device uses the USB communication device class (CDC) drivers to take advantage of the installed PC RS-232 software to talk over the USB. The CDC class is implemented in all releases of Windows®, from Windows 98SE® to Windows XP®. The CDC document, available at www.usb.org, describes how to implement devices such as ISDN modems and virtual COM ports.

The Vendor ID is Atmel's vendor ID 0x03EB. The product ID is 0x6124. These references are used by the host operating system to mount the correct driver. On Windows systems, the INF files contain the correspondence between vendor ID and product ID.

11.5.3.3 Enumeration Process

The USB protocol is a master/slave protocol. The host starts the enumeration, sending requests to the device through the control endpoint. The device handles standard requests as defined in the USB Specification.

Table 11-6. Handled Standard Requests

Request	Definition
GET_DESCRIPTOR	Returns the current device configuration value.
SET_ADDRESS	Sets the device address for all future device access.
SET_CONFIGURATION	Sets the device configuration.
GET_CONFIGURATION	Returns the current device configuration value.
GET_STATUS	Returns status for the specified recipient.
SET_FEATURE	Used to set or enable a specific feature.
CLEAR_FEATURE	Used to clear or disable a specific feature.

The device also handles some class requests defined in the CDC class.

Table 11-7. Handled Class Requests

Request	Definition
SET_LINE_CODING	Configures DTE rate, stop bits, parity and number of character bits.
GET_LINE_CODING	Requests current DTE rate, stop bits, parity and number of character bits.
SET_CONTROL_LINE_STATE	RS-232 signal used to tell the DCE device the DTE device is now present.

Unhandled requests are STALLed.

11.5.3.4 Communication Endpoints

There are two communication endpoints and endpoint 0 is used for the enumeration process. Endpoint 1 is a 64-byte Bulk OUT endpoint and endpoint 2 is a 64-byte Bulk IN endpoint. SAM-BA Boot commands are sent by the host through endpoint 1. If required, the message is split by the host into several data payloads by the host driver.

If the command requires a response, the host can send IN transactions to pick up the response.

12. Reset Controller (RSTC)

12.1 Description

The Reset Controller (RSTC), based on power-on reset cells, handles all the resets of the system without any external components. It reports which reset occurred last.

The Reset Controller also drives independently or simultaneously the external reset and the peripheral and processor resets.

12.2 Embedded Characteristics

The Reset Controller is based on two Power-on-Reset cells, one on VDDBU and one on VDDCORE.

The Reset Controller is capable to return to the software the source of the last reset, either a general reset (VDDBU rising), a wake-up reset (VDDCORE rising), a software reset, a user reset or a watchdog reset.

The Reset Controller controls the internal resets of the system and the NRST pin. The NRST pin is bidirectional. It is handled by the on-chip reset controller and can be driven low to provide a reset signal to the external components or asserted low externally to reset the microcontroller. It will reset the Core and the peripherals except the Backup region. There is no constraint on the length of the reset pulse and the reset controller can guarantee a minimum pulse length.

The NRST pin integrates a permanent pull-up resistor to VDDIOP0 of about 100 kΩ. NRST is an open drain output.

The configuration of the Reset Controller is saved as supplied on VDDBU.

12.3 Block Diagram

Figure 12-1. Reset Controller Block Diagram

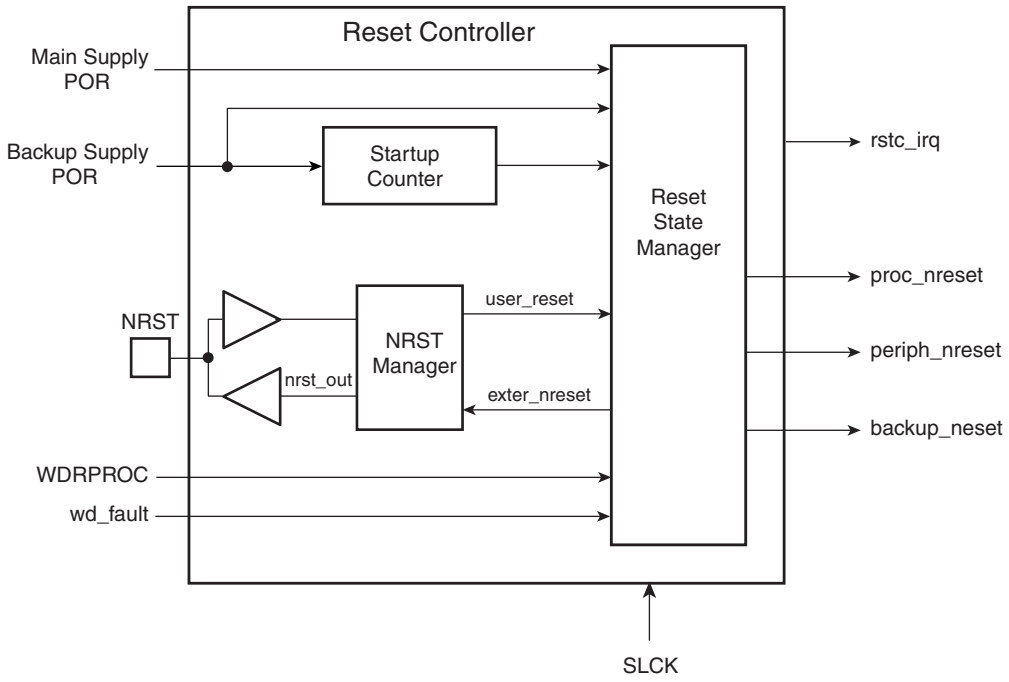

12.4 Functional Description

12.4.1 Reset Controller Overview

The Reset Controller is made up of an NRST Manager, a Startup Counter and a Reset State Manager. It runs at Slow Clock and generates the following reset signals:

- proc_nreset: Processor reset line. It also resets the Watchdog Timer.
- backup_nreset: Affects all the peripherals powered by VDDBU.
- periph_nreset: Affects the whole set of embedded peripherals.
- nrst_out: Drives the NRST pin.

These reset signals are asserted by the Reset Controller, either on external events or on software action. The Reset State Manager controls the generation of reset signals and provides a signal to the NRST Manager when an assertion of the NRST pin is required.

The NRST Manager shapes the NRST assertion during a programmable time, thus controlling external device resets.

The startup counter waits for the complete crystal oscillator startup. The wait delay is given by the crystal oscillator startup time maximum value that can be found in the section Crystal Oscillator Characteristics in the Electrical Characteristics section of the product documentation.

The Reset Controller Mode Register (RSTC_MR), allowing the configuration of the Reset Controller, is powered with VDDBU, so that its configuration is saved as long as VDDBU is on.

12.4.2 NRST Manager

The NRST Manager samples the NRST input pin and drives this pin low when required by the Reset State Manager. Figure 12-2 shows the block diagram of the NRST Manager.

Figure 12-2. NRST Manager

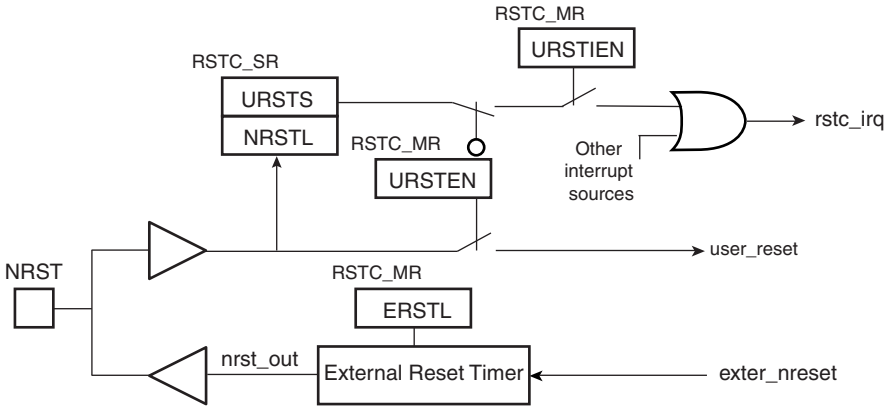

12.4.2.1 *NRST Signal or Interrupt*

The NRST Manager samples the NRST pin at Slow Clock speed. When the line is detected low, a User Reset is reported to the Reset State Manager.

However, the NRST Manager can be programmed to not trigger a reset when an assertion of NRST occurs. Writing the bit URSTEN at 0 in RSTC_MR disables the User Reset trigger.

The level of the pin NRST can be read at any time in the bit NRSTL (NRST level) in RSTC_SR. As soon as the pin NRST is asserted, the bit URSTS in RSTC_SR is set. This bit clears only when RSTC_SR is read.

The Reset Controller can also be programmed to generate an interrupt instead of generating a reset. To do so, the bit URSTIEN in RSTC_MR must be written at 1.

12.4.2.2 NRST External Reset Control

The Reset State Manager asserts the signal ext_nreset to assert the NRST pin. When this occurs, the “nrst_out” signal is driven low by the NRST Manager for a time programmed by the field ERSTL in RSTC_MR. This assertion duration, named EXTERNAL_RESET_LENGTH, lasts $2^{(ERSTL+1)}$ Slow Clock cycles. This gives the approximate duration of an assertion between 60 µs and 2 seconds. Note that ERSTL at 0 defines a two-cycle duration for the NRST pulse.

This feature allows the Reset Controller to shape the NRST pin level, and thus to guarantee that the NRST line is driven low for a time compliant with potential external devices connected on the system reset.

As the field is within RSTC_MR, which is backed-up, this field can be used to shape the system power-up reset for devices requiring a longer startup time than the Slow Clock Oscillator.

12.4.3 BMS Sampling

The product matrix manages a boot memory that depends on the level on the BMS pin at reset. The BMS signal is sampled three slow clock cycles after the Core Power-On-Reset output rising edge.

Figure 12-3. BMS Sampling

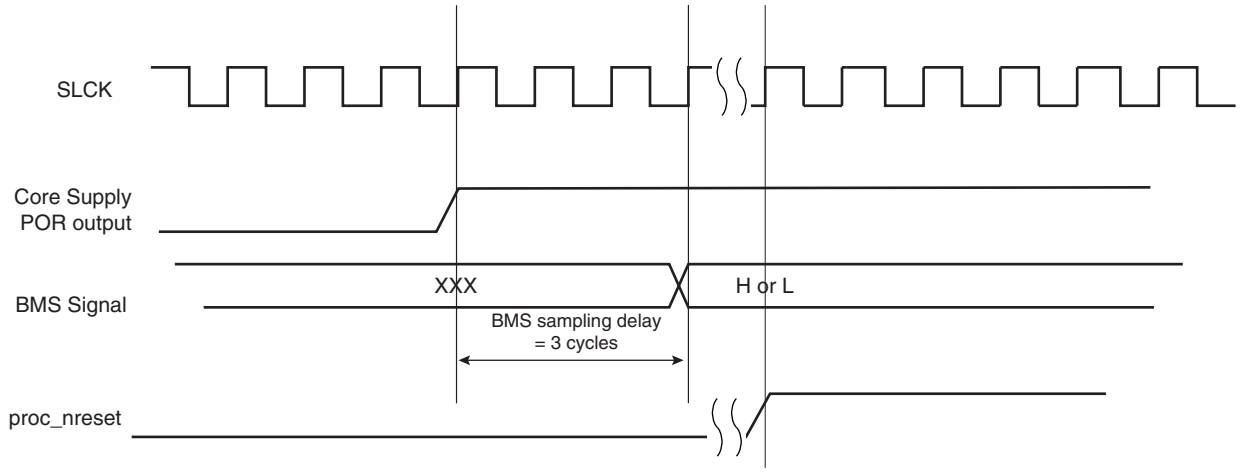

12.4.4 Reset States

The Reset State Manager handles the different reset sources and generates the internal reset signals. It reports the reset status in the field RSTTYP of the Status Register (RSTC_SR). The update of the field RSTTYP is performed when the processor reset is released.

12.4.4.1 General Reset

A general reset occurs when VDDBU and VDDCORE are powered on. The backup supply POR cell output rises and is filtered with a Startup Counter, which operates at Slow Clock. The purpose of this counter is to make sure the Slow Clock oscillator is stable before starting up the device. The length of startup time is hardcoded to comply with the Slow Clock Oscillator startup time.

After this time, the processor clock is released at Slow Clock and all the other signals remain valid for 3 cycles for proper processor and logic reset. Then, all the reset signals are released and the field RSTTYP in RSTC_SR reports a General Reset. As the RSTC_MR is reset, the NRST line rises 2 cycles after the backup_nreset, as ERSTL defaults at value 0x0.

When VDDBU is detected low by the Backup Supply POR Cell, all resets signals are immediately asserted, even if the Main Supply POR Cell does not report a Main Supply shutdown.

VDDBU only activates the backup_nreset signal.

The backup_nreset must be released so that any other reset can be generated by VDDCORE (Main Supply POR output).

Figure 12-4 shows how the General Reset affects the reset signals.

Figure 12-4. General Reset State

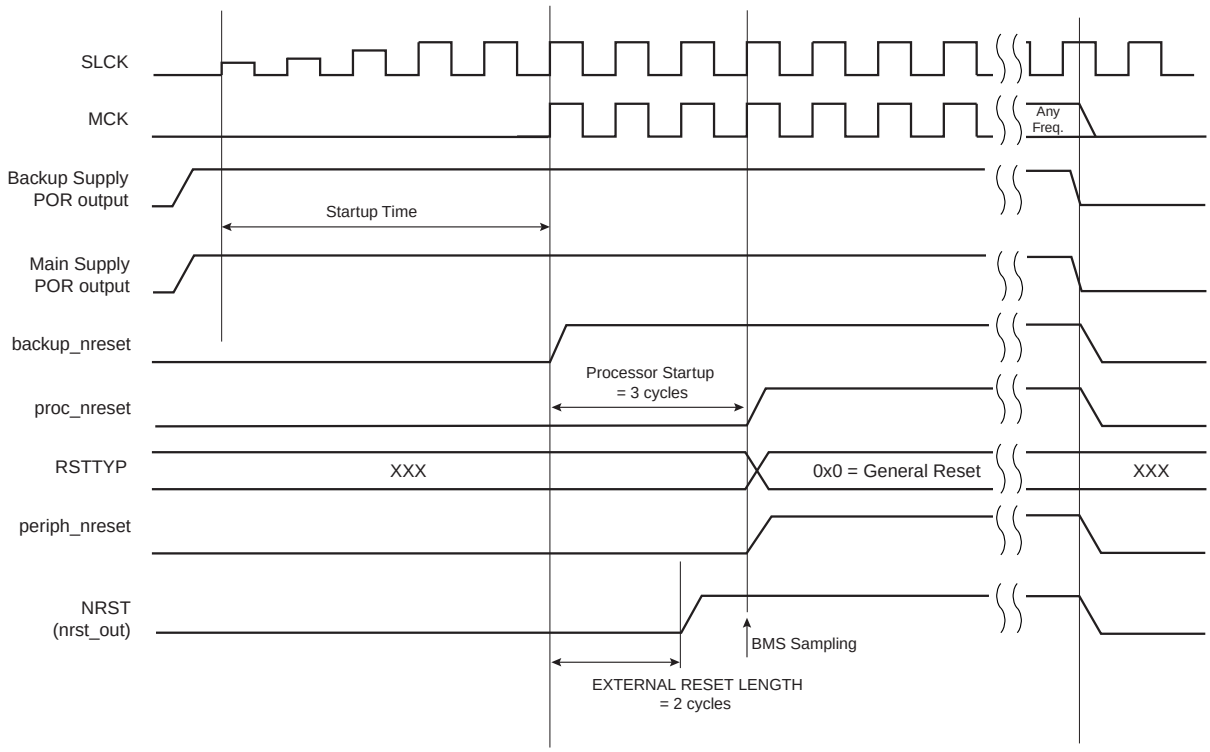

12.4.4.2 Wake-up Reset

The Wake-up Reset occurs when the Main Supply is down. When the Main Supply POR output is active, all the reset signals are asserted except backup_nreset. When the Main Supply powers up, the POR output is resynchronized on Slow Clock. The processor clock is then re-enabled during 3 Slow Clock cycles, depending on the requirements of the ARM processor.

At the end of this delay, the processor and other reset signals rise. The field RSTTYP in RSTC_SR is updated to report a Wake-up Reset.

The “nrst_out” remains asserted for EXTERNAL_RESET_LENGTH cycles. As RSTC_MR is backed-up, the programmed number of cycles is applicable.

When the Main Supply is detected falling, the reset signals are immediately asserted. This transition is synchronous with the output of the Main Supply POR.

Figure 12-5. Wake-up State

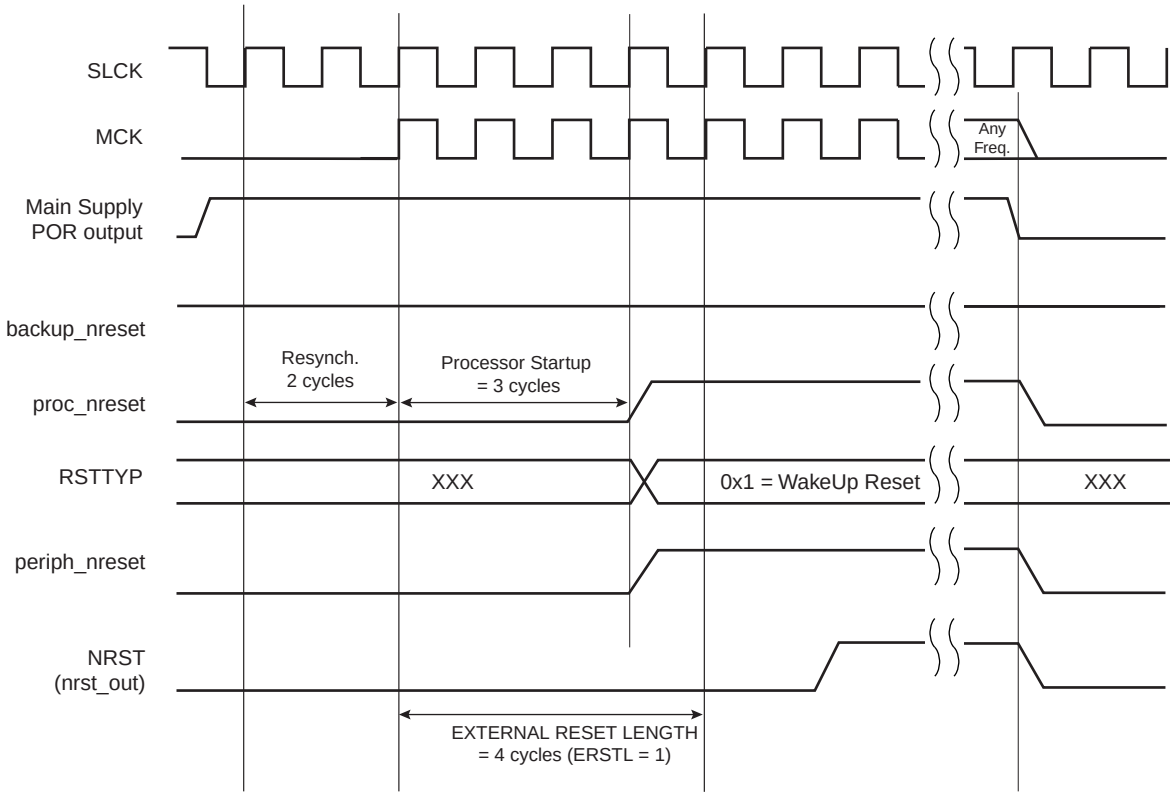

12.4.4.3 User Reset

The User Reset is entered when a low level is detected on the NRST pin and the bit URSTEN in RSTC_MR is at 1. The NRST input signal is resynchronized with SLCK to insure proper behavior of the system.

The User Reset is entered as soon as a low level is detected on NRST. The Processor Reset and the Peripheral Reset are asserted.

The User Reset is left when NRST rises, after a two-cycle resynchronization time and a 3-cycle processor startup. The processor clock is re-enabled as soon as NRST is confirmed high.

When the processor reset signal is released, the RSTTYP field of the Status Register (RSTC_SR) is loaded with the value 0x4, indicating a User Reset.

The NRST Manager guarantees that the NRST line is asserted for EXTERNAL_RESET_LENGTH Slow Clock cycles, as programmed in the field ERSTL. However, if NRST does not rise after EXTERNAL_RESET_LENGTH because it is driven low externally, the internal reset lines remain asserted until NRST actually rises.

Figure 12-6. User Reset State

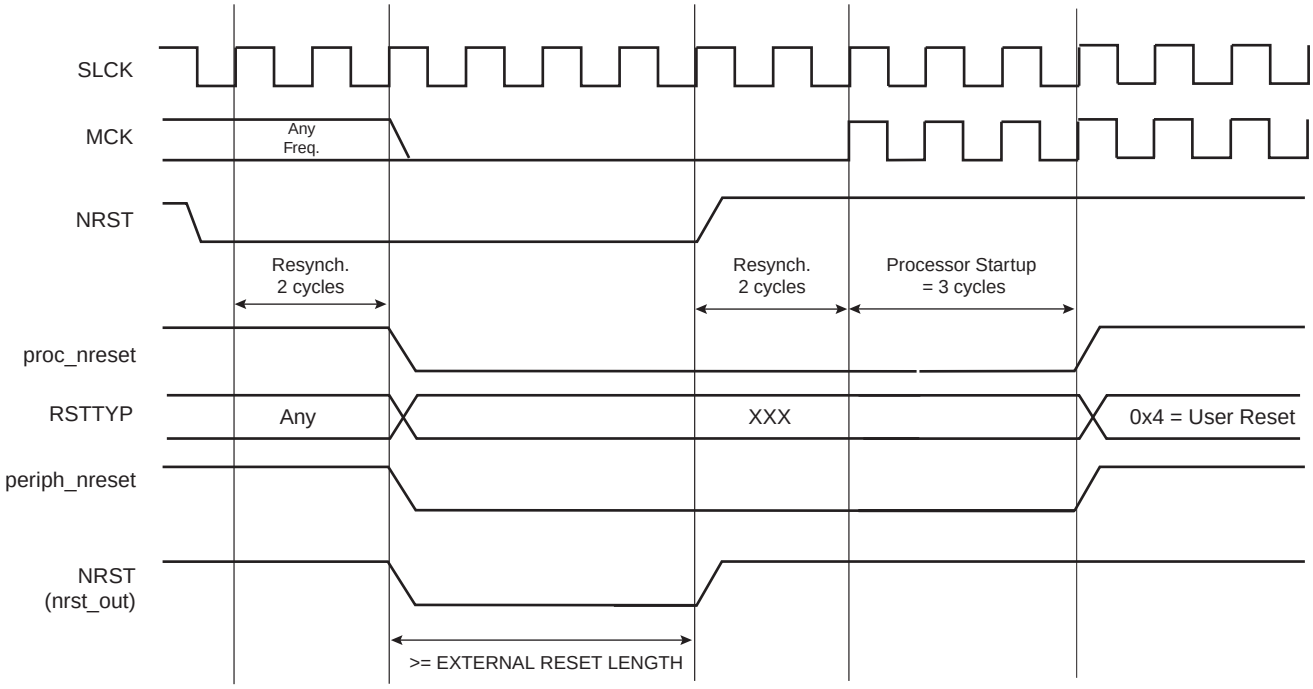

12.4.4.4 Software Reset

The Reset Controller offers several commands used to assert the different reset signals. These commands are performed by writing the Control Register (RSTC_CR) with the following bits at 1:

- PROCRST: Writing PROCRST at 1 resets the processor and the watchdog timer.
- PERRST: Writing PERRST at 1 resets all the embedded peripherals, including the memory system, and, in particular, the Remap Command. The Peripheral Reset is generally used for debug purposes.
  Except for Debug purposes, PERRST must always be used in conjunction with PROCRST (PERRST and PROCRST set both at 1 simultaneously.)
- EXTRST: Writing EXTRST at 1 asserts low the NRST pin during a time defined by the field ERSTL in the Mode Register (RSTC_MR).

The software reset is entered if at least one of these bits is set by the software. All these commands can be performed independently or simultaneously. The software reset lasts 3 Slow Clock cycles.

The internal reset signals are asserted as soon as the register write is performed. This is detected on the Master Clock (MCK). They are released when the software reset is left, i.e.; synchronously to SLCK.

If EXTRST is set, the nrst_out signal is asserted depending on the programming of the field ERSTL. However, the resulting falling edge on NRST does not lead to a User Reset.

If and only if the PROCRST bit is set, the Reset Controller reports the software status in the field RSTTYP of the Status Register (RSTC_SR). Other Software Resets are not reported in RSTTYP.

As soon as a software operation is detected, the bit SRCMP (Software Reset Command in Progress) is set in the Status Register (RSTC_SR). It is cleared as soon as the software reset is left. No other software reset can be performed while the SRCMP bit is set, and writing any value in RSTC_CR has no effect.

Figure 12-7. Software Reset

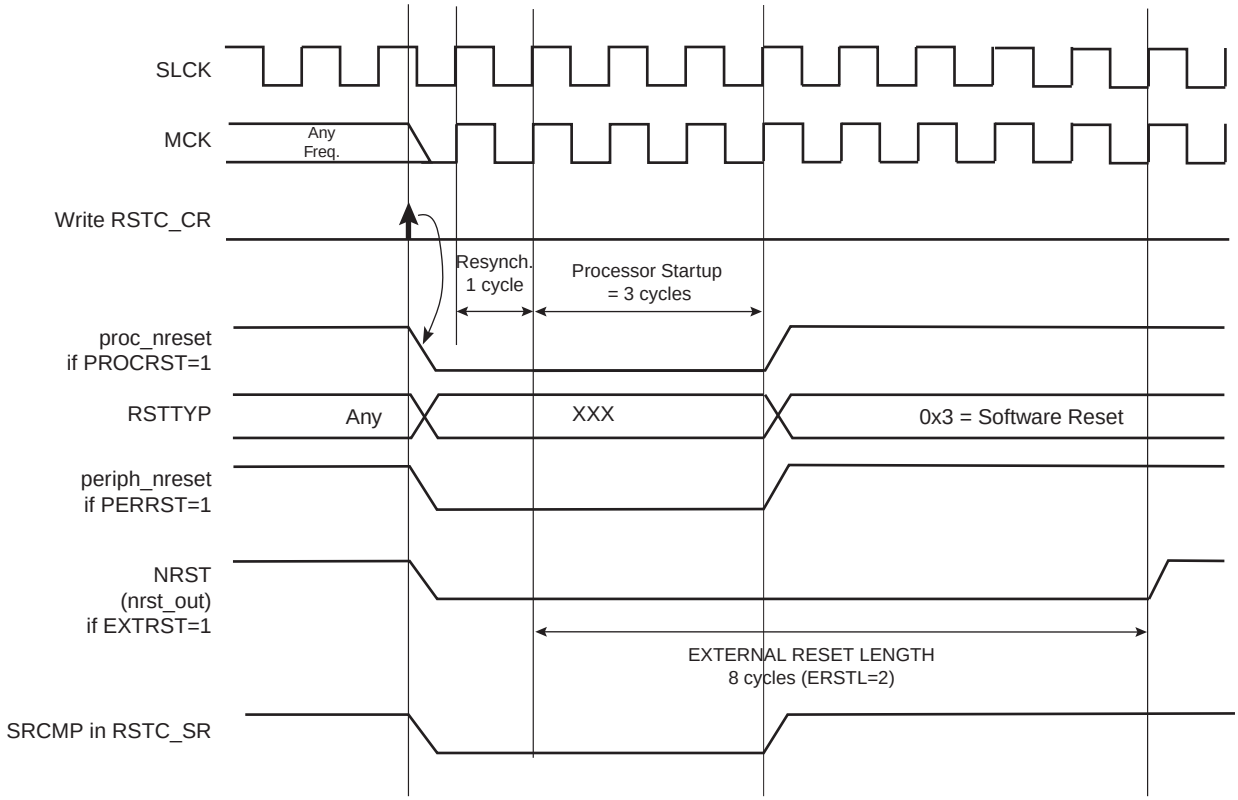

12.4.4.5 *Watchdog Reset*

The Watchdog Reset is entered when a watchdog fault occurs. This state lasts 3 Slow Clock cycles.

When in Watchdog Reset, assertion of the reset signals depends on the WDRPROC bit in WDT_MR:

- If WDRPROC is 0, the Processor Reset and the Peripheral Reset are asserted. The NRST line is also asserted, depending on the programming of the field ERSTL. However, the resulting low level on NRST does not result in a User Reset state.
- If WDRPROC = 1, only the processor reset is asserted.

The Watchdog Timer is reset by the proc_nreset signal. As the watchdog fault always causes a processor reset if WDRSTEN is set, the Watchdog Timer is always reset after a Watchdog Reset, and the Watchdog is enabled by default and with a period set to a maximum.

When the WDRSTEN in WDT_MR bit is reset, the watchdog fault has no impact on the reset controller.

Figure 12-8. Watchdog Reset

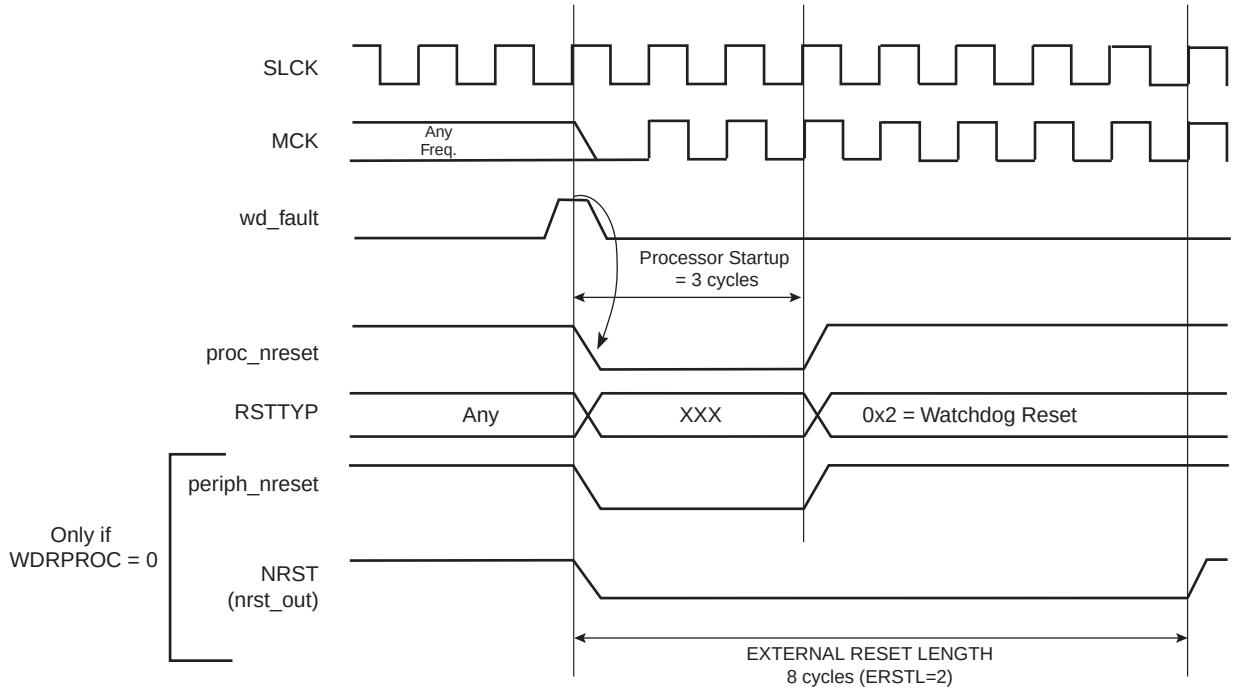

12.4.5 Reset State Priorities

The Reset State Manager manages the following priorities between the different reset sources, given in descending order:

- Backup Reset
- Wake-up Reset
- Watchdog Reset
- Software Reset
- User Reset

Particular cases are listed below:

- When in User Reset:
  - A watchdog event is impossible because the Watchdog Timer is being reset by the proc_nreset signal.
  - A software reset is impossible, since the processor reset is being activated.
- When in Software Reset:
  - A watchdog event has priority over the current state.
  - The NRST has no effect.
- When in Watchdog Reset:
  - The processor reset is active and so a Software Reset cannot be programmed.
  - A User Reset cannot be entered.

12.4.6 Reset Controller Status Register

The Reset Controller status register (RSTC_SR) provides several status fields:

- RSTTYP field: This field gives the type of the last reset, as explained in previous sections.
- SRCMP bit: This field indicates that a Software Reset Command is in progress and that no further software reset should be performed until the end of the current one. This bit is automatically cleared at the end of the current software reset.
- NRSTL bit: The NRSTL bit of the Status Register gives the level of the NRST pin sampled on each MCK rising edge.
- URSTS bit: A high-to-low transition of the NRST pin sets the URSTS bit of the RSTC_SR register. This transition is also detected on the Master Clock (MCK) rising edge (see Figure 12-9). If the User Reset is disabled (URSTEN = 0) and if the interruption is enabled by the URSTIEN bit in the RSTC_MR register, the URSTS bit triggers an interrupt. Reading the RSTC_SR status register resets the URSTS bit and clears the interrupt.

Figure 12-9. Reset Controller Status and Interrupt

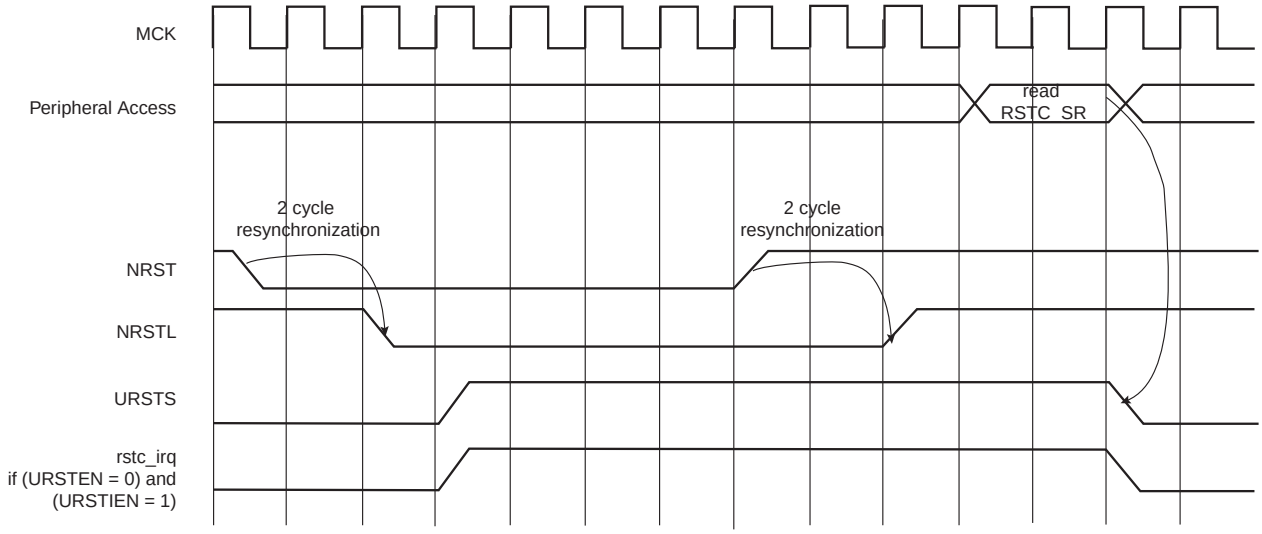

12.5 Reset Controller (RSTC) User Interface

Table 12-1. Register Mapping

Offset	Register	Name	Access	Reset	Backup Reset
0x00	Control Register	RSTC_CR	Write-only	-	
0x04	Status Register	RSTC_SR	Read-only	0x0000_0001	0x0000_0000
0x08	Mode Register	RSTC_MR	Read-write	-	0x0000_0001

Note: 1. The reset value of RSTC_SR either reports a General Reset or a Wake-up Reset depending on last rising power supply.

12.5.1 Reset Controller Control Register

Name: RSTC_CR

Address: 0xFFFFFD00

Access Type: Write-only

31	30	29	28	27	26	25	24
KEY							

23	22	21	20	19	18	17	16
–	–	–	–	–	–	–	–

15	14	13	12	11	10	9	8
–	–	–	–	–	–		–

7	6	5	4	3	2	1	0
–	–	–	–	EXTRST	PERRST	–	PROCRST

- **PROCRST: Processor Reset**

0 = No effect.

1 = If KEY is correct, resets the processor.

- **PERRST: Peripheral Reset**

0 = No effect.

1 = If KEY is correct, resets the peripherals.

- **EXTRST: External Reset**

0 = No effect.

1 = If KEY is correct, asserts the NRST pin.

- **KEY: Password**

Should be written at value 0xA5. Writing any other value in this field aborts the write operation.

12.5.2 Reset Controller Status Register

Name: RSTC_SR

Address: 0xFFFFFD04

Access Type: Read-only

31	30	29	28	27	26	25	24
–	–	–	–	–	–	–	–

23	22	21	20	19	18	17	16
–	–	–	–	–	–	SRCMP	NRSTL

15	14	13	12	11	10	9	8
–	–	–	–	–	RSTTYP		

7	6	5	4	3	2	1	0
–	–	–	–	–	–	–	URSTS

- **URSTS: User Reset Status**

0 = No high-to-low edge on NRST happened since the last read of RSTC_SR.

1 = At least one high-to-low transition of NRST has been detected since the last read of RSTC_SR.

- **RSTTYP: Reset Type**

Reports the cause of the last processor reset. Reading this RSTC_SR does not reset this field.

RSTTYP			Reset Type	Comments
0	0	0	General Reset	Both VDDCORE and VDDBU rising
0	0	1	Wake Up Reset	VDDCORE rising
0	1	0	Watchdog Reset	Watchdog fault occurred
0	1	1	Software Reset	Processor reset required by the software
1	0	0	User Reset	NRST pin detected low

- **NRSTL: NRST Pin Level**

Registers the NRST Pin Level at Master Clock (MCK).

- **SRCMP: Software Reset Command in Progress**

0 = No software command is being performed by the reset controller. The reset controller is ready for a software command.

1 = A software reset command is being performed by the reset controller. The reset controller is busy.

12.5.3 Reset Controller Mode Register

Name: RSTC_MR

Address: 0xFFFFFD08

Access Type: Read-write

31	30	29	28	27	26	25	24
KEY							

23	22	21	20	19	18	17	16
–	–	–	–	–	–	–	

15	14	13	12	11	10	9	8
–	–	–	–	ERSTL			

7	6	5	4	3	2	1	0
–	–		URSTIEN	–	–	–	URSTEN

- **URSTEN: User Reset Enable**

0 = The detection of a low level on the pin NRST does not generate a User Reset.

1 = The detection of a low level on the pin NRST triggers a User Reset.

- **URSTIEN: User Reset Interrupt Enable**

0 = USRTS bit in RSTC_SR at 1 has no effect on rstc_irq.

1 = USRTS bit in RSTC_SR at 1 asserts rstc_irq if URSTEN = 0.

- **ERSTL: External Reset Length**

This field defines the external reset length. The external reset is asserted during a time of $2^{(ERSTL+1)}$ Slow Clock cycles. This allows assertion duration to be programmed between 60 µs and 2 seconds.

- **KEY: Password**

Should be written at value 0xA5. Writing any other value in this field aborts the write operation.

13. Real-time Timer (RTT)

13.1 Description

The Real-time Timer (RTT) is built around a 32-bit counter and used to count elapsed seconds. It generates a periodic interrupt and/or triggers an alarm on a programmed value.

13.2 Embedded Characteristics

- Real-Time Timer, allowing backup of time with different accuracies
  - 32-bit Free-running back-up Counter
  - Integrates a 16-bit programmable prescaler running on slow clock
  - Alarm Register capable to generate a wake-up of the system through the Shut Down Controller

13.3 Block Diagram

Figure 13-1. Real-time Timer

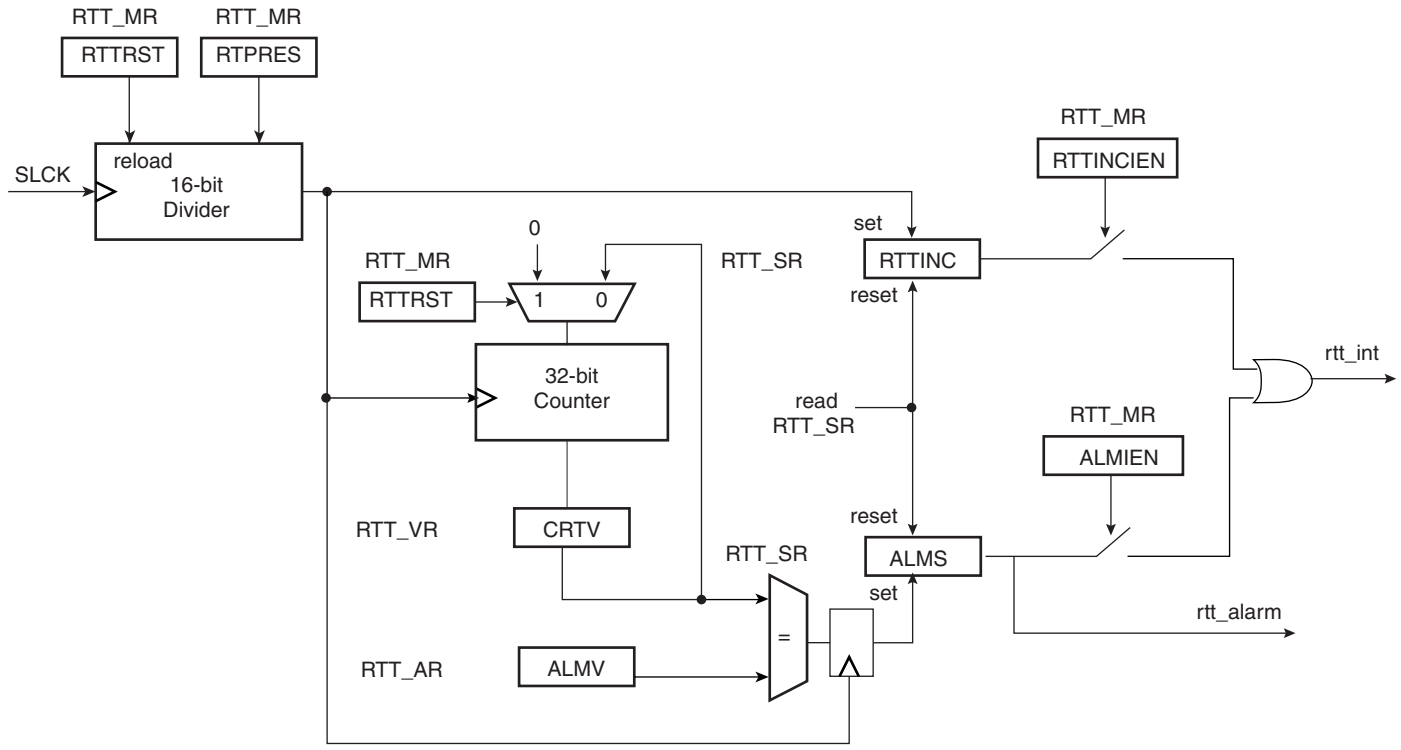

13.4 Functional Description

The Real-time Timer is used to count elapsed seconds. It is built around a 32-bit counter fed by Slow Clock divided by a programmable 16-bit value. The value can be programmed in the field RTPRES of the Real-time Mode Register (RTT_MR).

Programming RTPRES at 0x00008000 corresponds to feeding the real-time counter with a 1 Hz signal (if the Slow Clock is 32.768 kHz). The 32-bit counter can count up to 2^{32} seconds, corresponding to more than 136 years, then roll over to 0.

The Real-time Timer can also be used as a free-running timer with a lower time-base. The best accuracy is achieved by writing RTPRES to 3. Programming RTPRES to 1 or 2 is possible, but may result in losing status events because the status register is cleared two Slow Clock cycles after read. Thus if the RTT is configured to trigger an interrupt, the interrupt occurs during 2 Slow Clock cycles after reading RTT_SR. To prevent several executions of the interrupt handler, the interrupt must be disabled in the interrupt handler and re-enabled when the status register is clear.

The Real-time Timer value (CRTV) can be read at any time in the register RTT_VR (Real-time Value Register). As this value can be updated asynchronously from the Master Clock, it is advisable to read this register twice at the same value to improve accuracy of the returned value.

The current value of the counter is compared with the value written in the alarm register RTT_AR (Real-time Alarm Register). If the counter value matches the alarm, the bit ALMS in RTT_SR is set. The alarm register is set to its maximum value, corresponding to 0xFFFF_FFFF, after a reset.

The bit RTTINC in RTT_SR is set each time the Real-time Timer counter is incremented. This bit can be used to start a periodic interrupt, the period being one second when the RTPRES is programmed with 0x8000 and Slow Clock equal to 32.768 Hz.

Reading the RTT_SR status register resets the RTTINC and ALMS fields.

Writing the bit RTTRST in RTT_MR immediately reloads and restarts the clock divider with the new programmed value. This also resets the 32-bit counter.

Note: Because of the asynchronism between the Slow Clock (SCLK) and the System Clock (MCK):
1) The restart of the counter and the reset of the RTT_VR current value register is effective only 2 slow clock cycles after the write of the RTTRST bit in the RTT_MR register.
2) The status register flags reset is taken into account only 2 slow clock cycles after the read of the RTT_SR (Status Register).

Figure 13-2. RTT Counting

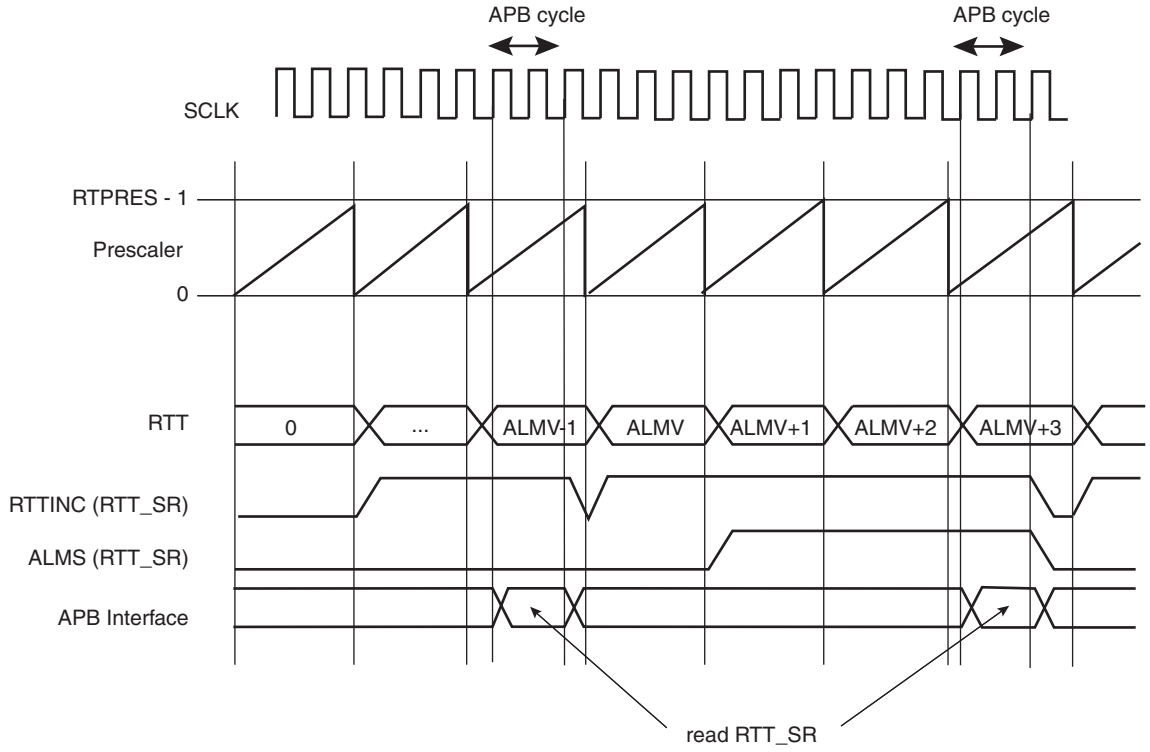

13.5 Real-time Timer (RTT) User Interface

Table 13-1. Register Mapping

Offset	Register	Name	Access	Reset
0x00	Mode Register	RTT_MR	Read-write	0x0000_8000
0x04	Alarm Register	RTT_AR	Read-write	0xFFFF_FFFF
0x08	Value Register	RTT_VR	Read-only	0x0000_0000
0x0C	Status Register	RTT_SR	Read-only	0x0000_0000

13.5.1 Real-time Timer Mode Register

Register Name: RTT_MR

Address: 0xFFFFFD20

Access Type: Read/Write

31	30	29	28	27	26	25	24
–	–	–	–	–	–	–	–

23	22	21	20	19	18	17	16
–	–	–	–	–	RTTRST	RTTINCIEN	ALMIEN

15	14	13	12	11	10	9	8
RTPRES							

7	6	5	4	3	2	1	0
RTPRES							

- **RTPRES: Real-time Timer Prescaler Value**

Defines the number of SLCK periods required to increment the Real-time timer. RTPRES is defined as follows:

RTPRES = 0: The prescaler period is equal to 2^{16}.

RTPRES ≠ 0: The prescaler period is equal to RTPRES.

- **ALMIEN: Alarm Interrupt Enable**

0 = The bit ALMS in RTT_SR has no effect on interrupt.

1 = The bit ALMS in RTT_SR asserts interrupt.

- **RTTINCIEN: Real-time Timer Increment Interrupt Enable**

0 = The bit RTTINC in RTT_SR has no effect on interrupt.

1 = The bit RTTINC in RTT_SR asserts interrupt.

- **RTTRST: Real-time Timer Restart**

1 = Reloads and restarts the clock divider with the new programmed value. This also resets the 32-bit counter.

13.5.2 Real-time Timer Alarm Register

Register Name: RTT_AR

Address: 0xFFFFFD24

Access Type: Read/Write

31	30	29	28	27	26	25	24
ALMV							

23	22	21	20	19	18	17	16
ALMV							

15	14	13	12	11	10	9	8
ALMV							

7	6	5	4	3	2	1	0
ALMV							

- **ALMV: Alarm Value**

Defines the alarm value (ALMV+1) compared with the Real-time Timer.

13.5.3 Real-time Timer Value Register

Register Name: RTT_VR

Address: 0xFFFFFD28

Access Type: Read-only

31	30	29	28	27	26	25	24
CRTV							

23	22	21	20	19	18	17	16
CRTV							

15	14	13	12	11	10	9	8
CRTV							

7	6	5	4	3	2	1	0
CRTV							

- **CRTV: Current Real-time Value**

Returns the current value of the Real-time Timer.

13.5.4 Real-time Timer Status Register

Register Name: RTT_SR

Address: 0xFFFFFD2C

Access Type: Read-only

31	30	29	28	27	26	25	24
–	–	–	–	–	–	–	–

23	22	21	20	19	18	17	16
–	–	–	–	–	–	–	–

15	14	13	12	11	10	9	8
–	–	–	–	–	–	–	–

7	6	5	4	3	2	1	0
–	–	–	–	–	–	RTTINC	ALMS

- **ALMS: Real-time Alarm Status**

0 = The Real-time Alarm has not occurred since the last read of RTT_SR.

1 = The Real-time Alarm occurred since the last read of RTT_SR.

- **RTTINC: Real-time Timer Increment**

0 = The Real-time Timer has not been incremented since the last read of the RTT_SR.

1 = The Real-time Timer has been incremented since the last read of the RTT_SR.

14. Real-time Clock (RTC)

14.1 Description

The Real-time Clock (RTC) peripheral is designed for very low power consumption.

It combines a complete time-of-day clock with alarm and a two-hundred-year Gregorian calendar, complemented by a programmable periodic interrupt. The alarm and calendar registers are accessed by a 32-bit data bus.

The time and calendar values are coded in binary-coded decimal (BCD) format. The time format can be 24-hour mode or 12-hour mode with an AM/PM indicator.

Updating time and calendar fields and configuring the alarm fields are performed by a parallel capture on the 32-bit data bus. An entry control is performed to avoid loading registers with incompatible BCD format data or with an incompatible date according to the current month/year/century.

14.2 Embedded Characteristics

- Low power consumption
- Full asynchronous design
- Two hundred year calendar
- Programmable Periodic Interrupt
- Alarm and update parallel load
- Control of alarm and update Time/Calendar Data In

14.3 Block Diagram

Figure 14-1. RTC Block Diagram

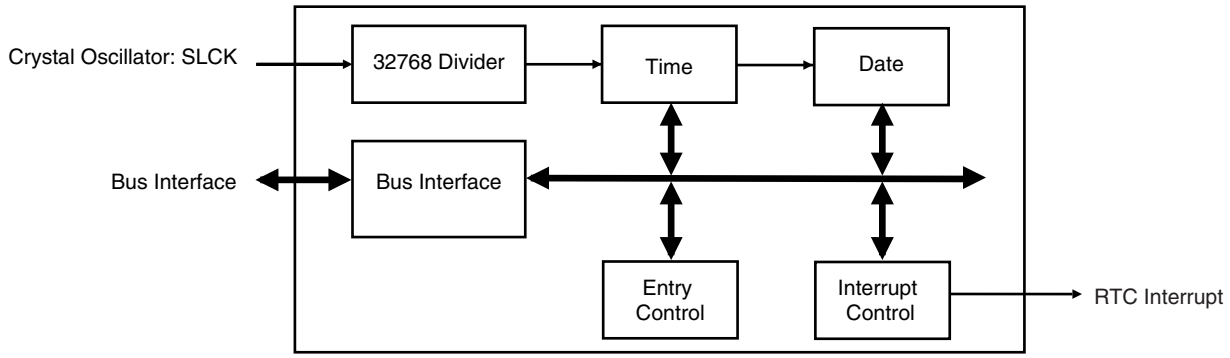

14.4 Product Dependencies

14.4.1 Power Management

The Real-time Clock is continuously clocked at 32768 Hz. The Power Management Controller has no effect on RTC behavior.

14.4.2 Interrupt

The RTC Interrupt is connected to interrupt source 1 (IRQ1) of the advanced interrupt controller. This interrupt line is due to the OR-wiring of the system peripheral interrupt lines (System Timer, Real Time Clock, Power Management Controller, Memory Controller, etc.). When a system interrupt occurs, the service routine must first determine the cause of the interrupt. This is done by reading the status registers of the above system peripherals successively.

14.5 Functional Description

The RTC provides a full binary-coded decimal (BCD) clock that includes century (19/20), year (with leap years), month, date, day, hours, minutes and seconds.

The valid year range is 1900 to 2099, a two-hundred-year Gregorian calendar achieving full Y2K compliance.

The RTC can operate in 24-hour mode or in 12-hour mode with an AM/PM indicator.

Corrections for leap years are included (all years divisible by 4 being leap years, including year 2000). This is correct up to the year 2099.

After a general reset (a backup reset), the calendar is initialized to Thursday, January 1, 1998.

14.5.1 Reference Clock

The reference clock is Slow Clock (SLCK). It can be driven internally or by an external 32.768 kHz crystal.

During low power modes of the processor (idle mode), the oscillator runs and power consumption is critical. The crystal selection has to take into account the current consumption for power saving and the frequency drift due to temperature effect on the circuit for time accuracy.

14.5.2 Timing

The RTC is updated in real time at one-second intervals in normal mode for the counters of seconds, at one-minute intervals for the counter of minutes and so on.

Due to the asynchronous operation of the RTC with respect to the rest of the chip, to be certain that the value read in the RTC registers (century, year, month, date, day, hours, minutes, seconds) are valid and stable, it is necessary to read these registers twice. If the data is the same both times, then it is valid. Therefore, a minimum of two and a maximum of three accesses are required.

14.5.3 Alarm

The RTC has five programmable fields: month, date, hours, minutes and seconds.

Each of these fields can be enabled or disabled to match the alarm condition:

- If all the fields are enabled, an alarm flag is generated (the corresponding flag is asserted and an interrupt generated if enabled) at a given month, date, hour/minute/second.
- If only the “seconds” field is enabled, then an alarm is generated every minute.

Depending on the combination of fields enabled, a large number of possibilities are available to the user ranging from minutes to 365/366 days.

14.5.4 Error Checking

Verification on user interface data is performed when accessing the century, year, month, date, day, hours, minutes, seconds and alarms. A check is performed on illegal BCD entries such as illegal date of the month with regard to the year and century configured.

If one of the time fields is not correct, the data is not loaded into the register/counter and a flag is set in the validity register. The user can not reset this flag. It is reset as soon as an acceptable value is programmed. This avoids any further side effects in the hardware. The same procedure is done for the alarm.

The following checks are performed:

1. Century (check if it is in range 19 - 20)
2. Year (BCD entry check)
3. Date (check range 01 - 31)
4. Month (check if it is in BCD range 01 - 12, check validity regarding “date”)
5. Day (check range 1 - 7)
6. Hour (BCD checks: in 24-hour mode, check range 00 - 23 and check that AM/PM flag is not set if RTC is set in 24-hour mode; in 12-hour mode check range 01 - 12)
7. Minute (check BCD and range 00 - 59)
8. Second (check BCD and range 00 - 59)

Note: If the 12-hour mode is selected by means of the RTC_MODE register, a 12-hour value can be programmed and the returned value on RTC_TIME will be the corresponding 24-hour value. The entry control checks the value of the AM/PM indicator (bit 22 of RTC_TIME register) to determine the range to be checked.

14.5.5 Updating Time/Calendar

To update any of the time/calendar fields, the user must first stop the RTC by setting the corresponding field in the Control Register. Bit UPDTIM must be set to update time fields (hour, minute, second) and bit UPDCAL must be set to update calendar fields (century, year, month, date, day).

Then the user must poll or wait for the interrupt (if enabled) of bit ACKUPD in the Status Register. Once the bit reads 1, it is mandatory to clear this flag by writing the corresponding bit in RTC_SCCR. The user can now write to the appropriate Time and Calendar register.

Once the update is finished, the user must reset (0) UPDTIM and/or UPDCAL in the Control

When entering programming mode of the calendar fields, the time fields remain enabled. When entering the programming mode of the time fields, both time and calendar fields are stopped. This is due to the location of the calendar logic circuity (downstream for low-power considerations). It is highly recommended to prepare all the fields to be updated before entering programming mode. In successive update operations, the user must wait at least one second after resetting the UPDTIM/UPDCAL bit in the RTC_CR (Control Register) before setting these bits again. This is done by waiting for the SEC flag in the Status Register before setting UPDTIM/UPDCAL bit. After resetting UPDTIM/UPDCAL, the SEC flag must also be cleared.

Figure 14-2. Update Sequence

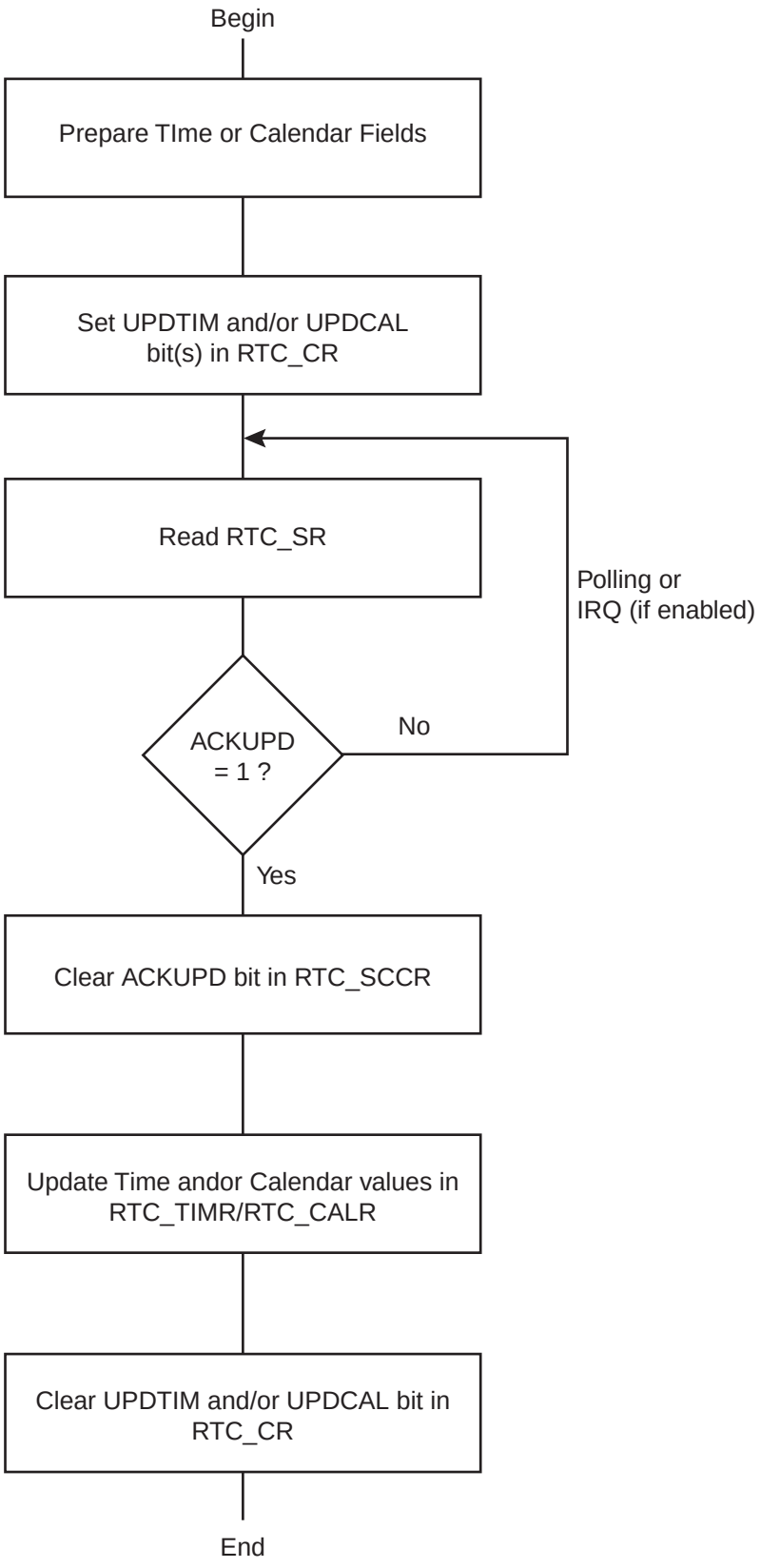

14.6 Real-time Clock (RTC) User Interface

Table 14-1. Register Mapping

Offset	Register	Name	Access	Reset
0x00	Control Register	RTC_CR	Read-write	0x0
0x04	Mode Register	RTC_MR	Read-write	0x0
0x08	Time Register	RTC_TIMR	Read-write	0x0
0x0C	Calendar Register	RTC_CALR	Read-write	0x01210720
0x10	Time Alarm Register	RTC_TIMALR	Read-write	0x0
0x14	Calendar Alarm Register	RTC_CALALR	Read-write	0x01010000
0x18	Status Register	RTC_SR	Read-only	0x0
0x1C	Status Clear Command Register	RTC_SCCR	Write-only	---
0x20	Interrupt Enable Register	RTC_IER	Write-only	---
0x24	Interrupt Disable Register	RTC_IDR	Write-only	---
0x28	Interrupt Mask Register	RTC_IMR	Read-only	0x0
0x2C	Valid Entry Register	RTC_VER	Read-only	0x0

14.6.1 RTC Control Register

Name: RTC_CR

Address: 0xFFFFFDB0

Access Type: Read-write

31	30	29	28	27	26	25	24
–	–	–	–	–	–	–	–

23	22	21	20	19	18	17	16
–	–	–	–	–	–	CALEVSEL	

15	14	13	12	11	10	9	8
–	–	–	–	–	–	TIMEVSEL	

7	6	5	4	3	2	1	0
–	–	–	–	–	–	UPDCAL	UPDTIM

- **UPDTIM: Update Request Time Register**

0 = No effect.

1 = Stops the RTC time counting.

Time counting consists of second, minute and hour counters. Time counters can be programmed once this bit is set and acknowledged by the bit ACKUPD of the Status Register.

- **UPDCAL: Update Request Calendar Register**

0 = No effect.

1 = Stops the RTC calendar counting.

Calendar counting consists of day, date, month, year and century counters. Calendar counters can be programmed once this bit is set.

- **TIMEVSEL: Time Event Selection**

The event that generates the flag TIMEV in RTC_SR (Status Register) depends on the value of TIMEVSEL.

0 = Minute change.

1 = Hour change.

2 = Every day at midnight.

3 = Every day at noon.

- **CALEVSEL: Calendar Event Selection**

The event that generates the flag CALEV in RTC_SR depends on the value of CALEVSEL.

0 = Week change (every Monday at time 00:00:00).

1 = Month change (every 01 of each month at time 00:00:00).

2, 3 = Year change (every January 1 at time 00:00:00).

14.6.2 RTC Mode Register

Name: RTC_MR

Address: 0xFFFFFDB4

Access Type: Read-write

31	30	29	28	27	26	25	24
–	–	–	–	–	–	–	–
23	22	21	20	19	18	17	16
–	–	–	–	–	–	–	–
15	14	13	12	11	10	9	8
–	–	–	–	–	–	–	–
7	6	5	4	3	2	1	0
–	–	–	–	–	–	–	HRMOD

- **HRMOD: 12-/24-hour Mode**

0 = 24-hour mode is selected.

1 = 12-hour mode is selected.

All non-significant bits read zero.

14.6.3 RTC Time Register

Name: RTC_TIMR

Address: 0xFFFFFDB8

Access Type: Read-write

31	30	29	28	27	26	25	24
–	–	–	–	–	–	–	–

23	22	21	20	19	18	17	16
–	AMPM	HOUR					

15	14	13	12	11	10	9	8
–	MIN						

7	6	5	4	3	2	1	0
–	SEC						

- **SEC: Current Second**

The range that can be set is 0 - 59 (BCD).

The lowest four bits encode the units. The higher bits encode the tens.

- **MIN: Current Minute**

The range that can be set is 0 - 59 (BCD).

The lowest four bits encode the units. The higher bits encode the tens.

- **HOUR: Current Hour**

The range that can be set is 1 - 12 (BCD) in 12-hour mode or 0 - 23 (BCD) in 24-hour mode.

- **AMPM: Ante Meridiem Post Meridiem Indicator**

This bit is the AM/PM indicator in 12-hour mode.

0 = AM.

1 = PM.

All non-significant bits read zero.

14.6.4 RTC Calendar Register

Name: RTC_CALR

Address: 0xFFFFFDBC

Access Type: Read-write

31	30	29	28	27	26	25	24
–	–	DATE					

23	22	21	20	19	18	17	16
DAY			MONTH				

15	14	13	12	11	10	9	8
YEAR							

7	6	5	4	3	2	1	0
–	CENT						

- **CENT: Current Century**

The range that can be set is 19 - 20 (BCD).

The lowest four bits encode the units. The higher bits encode the tens.

- **YEAR: Current Year**

The range that can be set is 00 - 99 (BCD).

The lowest four bits encode the units. The higher bits encode the tens.

- **MONTH: Current Month**

The range that can be set is 01 - 12 (BCD).

The lowest four bits encode the units. The higher bits encode the tens.

- **DAY: Current Day in Current Week**

The range that can be set is 1 - 7 (BCD).

The coding of the number (which number represents which day) is user-defined as it has no effect on the date counter.

- **DATE: Current Day in Current Month**

The range that can be set is 01 - 31 (BCD).

The lowest four bits encode the units. The higher bits encode the tens.

All non-significant bits read zero.

14.6.5 RTC Time Alarm Register

Name: RTC_TIMALR

Address: 0xFFFFFDC0

Access Type: Read-write

31	30	29	28	27	26	25	24
–	–	–	–	–	–	–	–

23	22	21	20	19	18	17	16
HOUREN	AMPM	HOUR					

15	14	13	12	11	10	9	8
MINEN	MIN						

7	6	5	4	3	2	1	0
SECEN	SEC						

- **SEC: Second Alarm**

This field is the alarm field corresponding to the BCD-coded second counter.

- **SECEN: Second Alarm Enable**

0 = The second-matching alarm is disabled.

1 = The second-matching alarm is enabled.

- **MIN: Minute Alarm**

This field is the alarm field corresponding to the BCD-coded minute counter.

- **MINEN: Minute Alarm Enable**

0 = The minute-matching alarm is disabled.

1 = The minute-matching alarm is enabled.

- **HOUR: Hour Alarm**

This field is the alarm field corresponding to the BCD-coded hour counter.

- **AMPM: AM/PM Indicator**

This field is the alarm field corresponding to the BCD-coded hour counter.

- **HOUREN: Hour Alarm Enable**

0 = The hour-matching alarm is disabled.

1 = The hour-matching alarm is enabled.

14.6.6 RTC Calendar Alarm Register

Name: RTC_CALALR

Address: 0xFFFFFDC4

Access Type: Read-write

31	30	29	28	27	26	25	24
DATEEN	–	DATE					

23	22	21	20	19	18	17	16
MTHEN	–	–	MONTH				

15	14	13	12	11	10	9	8
–	–	–	–	–	–	–	–

7	6	5	4	3	2	1	0
–	–	–	–	–	–	–	–

- **MONTH: Month Alarm**

This field is the alarm field corresponding to the BCD-coded month counter.

- **MTHEN: Month Alarm Enable**

0 = The month-matching alarm is disabled.

1 = The month-matching alarm is enabled.

- **DATE: Date Alarm**

This field is the alarm field corresponding to the BCD-coded date counter.

- **DATEEN: Date Alarm Enable**

0 = The date-matching alarm is disabled.

1 = The date-matching alarm is enabled.

14.6.7 RTC Status Register

Name: RTC_SR

Address: 0xFFFFFDC8

Access Type: Read-only

31	30	29	28	27	26	25	24
–	–	–	–	–	–	–	–

23	22	21	20	19	18	17	16
–	–	–	–	–	–	–	–

15	14	13	12	11	10	9	8
–	–	–	–	–	–	–	–

7	6	5	4	3	2	1	0
–	–	–	CALEV	TIMEV	SEC	ALARM	ACKUPD

- **ACKUPD: Acknowledge for Update**

0 = Time and calendar registers cannot be updated.

1 = Time and calendar registers can be updated.

- **ALARM: Alarm Flag**

0 = No alarm matching condition occurred.

1 = An alarm matching condition has occurred.

- **SEC: Second Event**

0 = No second event has occurred since the last clear.

1 = At least one second event has occurred since the last clear.

- **TIMEV: Time Event**

0 = No time event has occurred since the last clear.

1 = At least one time event has occurred since the last clear.

The time event is selected in the TIMEVSEL field in RTC_CTRL (Control Register) and can be any one of the following events: minute change, hour change, noon, midnight (day change).

- **CALEV: Calendar Event**

0 = No calendar event has occurred since the last clear.

1 = At least one calendar event has occurred since the last clear.

The calendar event is selected in the CALEVSEL field in RTC_CR and can be any one of the following events: week change, month change and year change.

14.6.8 RTC Status Clear Command Register

Name: RTC_SCCR

Address: 0xFFFFFDCC

Access Type: Write-only

31	30	29	28	27	26	25	24
–	–	–	–	–	–	–	–
23	22	21	20	19	18	17	16
–	–	–	–	–	–	–	–
15	14	13	12	11	10	9	8
–	–	–	–	–	–	–	–
7	6	5	4	3	2	1	0
–	–	–	CALCLR	TIMCLR	SECCLR	ALRCLR	ACKCLR

- **ACKCLR: Acknowledge Clear**

0 = No effect.

1 = Clears corresponding status flag in the Status Register (RTC_SR).

- **ALRCLR: Alarm Clear**

0 = No effect.

1 = Clears corresponding status flag in the Status Register (RTC_SR).

- **SECCLR: Second Clear**

0 = No effect.

1 = Clears corresponding status flag in the Status Register (RTC_SR).

- **TIMCLR: Time Clear**

0 = No effect.

1 = Clears corresponding status flag in the Status Register (RTC_SR).

- **CALCLR: Calendar Clear**

0 = No effect.

1 = Clears corresponding status flag in the Status Register (RTC_SR).

14.6.9 RTC Interrupt Enable Register

Name: RTC_IER

Address: 0xFFFFFDD0

Access Type: Write-only

31	30	29	28	27	26	25	24
–	–	–	–	–	–	–	–
23	22	21	20	19	18	17	16
–	–	–	–	–	–	–	–
15	14	13	12	11	10	9	8
–	–	–	–	–	–	–	–
7	6	5	4	3	2	1	0
–	–	–	CALEN	TIMEN	SECEN	ALREN	ACKEN

- **ACKEN: Acknowledge Update Interrupt Enable**

0 = No effect.

1 = The acknowledge for update interrupt is enabled.

- **ALREN: Alarm Interrupt Enable**

0 = No effect.

1 = The alarm interrupt is enabled.

- **SECEN: Second Event Interrupt Enable**

0 = No effect.

1 = The second periodic interrupt is enabled.

- **TIMEN: Time Event Interrupt Enable**

0 = No effect.

1 = The selected time event interrupt is enabled.

- **CALEN: Calendar Event Interrupt Enable**

0 = No effect.

- 1 = The selected calendar event interrupt is enabled.

14.6.10 RTC Interrupt Disable Register

Name: RTC_IDR

Address: 0xFFFFFDD4

Access Type: Write-only

31	30	29	28	27	26	25	24
–	–	–	–	–	–	–	–

23	22	21	20	19	18	17	16
–	–	–	–	–	–	–	–

15	14	13	12	11	10	9	8
–	–	–	–	–	–	–	–

7	6	5	4	3	2	1	0
–	–	–	CALDIS	TIMDIS	SECDIS	ALRDIS	ACKDIS

- **ACKDIS: Acknowledge Update Interrupt Disable**

0 = No effect.

1 = The acknowledge for update interrupt is disabled.

- **ALRDIS: Alarm Interrupt Disable**

0 = No effect.

1 = The alarm interrupt is disabled.

- **SECDIS: Second Event Interrupt Disable**

0 = No effect.

1 = The second periodic interrupt is disabled.

- **TIMDIS: Time Event Interrupt Disable**

0 = No effect.

1 = The selected time event interrupt is disabled.

- **CALDIS: Calendar Event Interrupt Disable**

0 = No effect.

1 = The selected calendar event interrupt is disabled.

14.6.11 RTC Interrupt Mask Register

Name: RTC_IMR

Address: 0xFFFFFDD8

Access Type: Read-only

31	30	29	28	27	26	25	24
–	–	–	–	–	–	–	–

23	22	21	20	19	18	17	16
–	–	–	–	–	–	–	–

15	14	13	12	11	10	9	8
–	–	–	–	–	–	–	–

7	6	5	4	3	2	1	0
–	–	–	CAL	TIM	SEC	ALR	ACK

- **ACK: Acknowledge Update Interrupt Mask**

0 = The acknowledge for update interrupt is disabled.

1 = The acknowledge for update interrupt is enabled.

- **ALR: Alarm Interrupt Mask**

0 = The alarm interrupt is disabled.

1 = The alarm interrupt is enabled.

- **SEC: Second Event Interrupt Mask**

0 = The second periodic interrupt is disabled.

1 = The second periodic interrupt is enabled.

- **TIM: Time Event Interrupt Mask**

0 = The selected time event interrupt is disabled.

1 = The selected time event interrupt is enabled.

- **CAL: Calendar Event Interrupt Mask**

0 = The selected calendar event interrupt is disabled.

1 = The selected calendar event interrupt is enabled.

14.6.12 RTC Valid Entry Register

Name: RTC_VER

Address: 0xFFFFFDDC

Access Type: Read-only

31	30	29	28	27	26	25	24
–	–	–	–	–	–	–	–

23	22	21	20	19	18	17	16
–	–	–	–	–	–	–	–

15	14	13	12	11	10	9	8
–	–	–	–	–	–	–	–

7	6	5	4	3	2	1	0
–	–	–	–	NVCALALR	NVTIMALR	NVCAL	NVTIM

- **NVTIM: Non-valid Time**

0 = No invalid data has been detected in RTC_TIMR (Time Register).

1 = RTC_TIMR has contained invalid data since it was last programmed.

- **NVCAL: Non-valid Calendar**

0 = No invalid data has been detected in RTC_CALR (Calendar Register).

1 = RTC_CALR has contained invalid data since it was last programmed.

- **NVTIMALR: Non-valid Time Alarm**

0 = No invalid data has been detected in RTC_TIMALR (Time Alarm Register).

1 = RTC_TIMALR has contained invalid data since it was last programmed.

- **NVCALALR: Non-valid Calendar Alarm**

0 = No invalid data has been detected in RTC_CALALR (Calendar Alarm Register).

1 = RTC_CALALR has contained invalid data since it was last programmed.

15. Periodic Interval Timer (PIT)

15.1 Description

The Periodic Interval Timer (PIT) provides the operating system's scheduler interrupt. It is designed to offer maximum accuracy and efficient management, even for systems with long response time.

15.2 Embedded Characteristics

- Includes a 20-bit Periodic Counter, with less than 1µs accuracy
- Includes a 12-bit Interval Overlay Counter
- Real Time OS or Linux/WinCE compliant tick generator

15.3 Block Diagram

Figure 15-1. Periodic Interval Timer

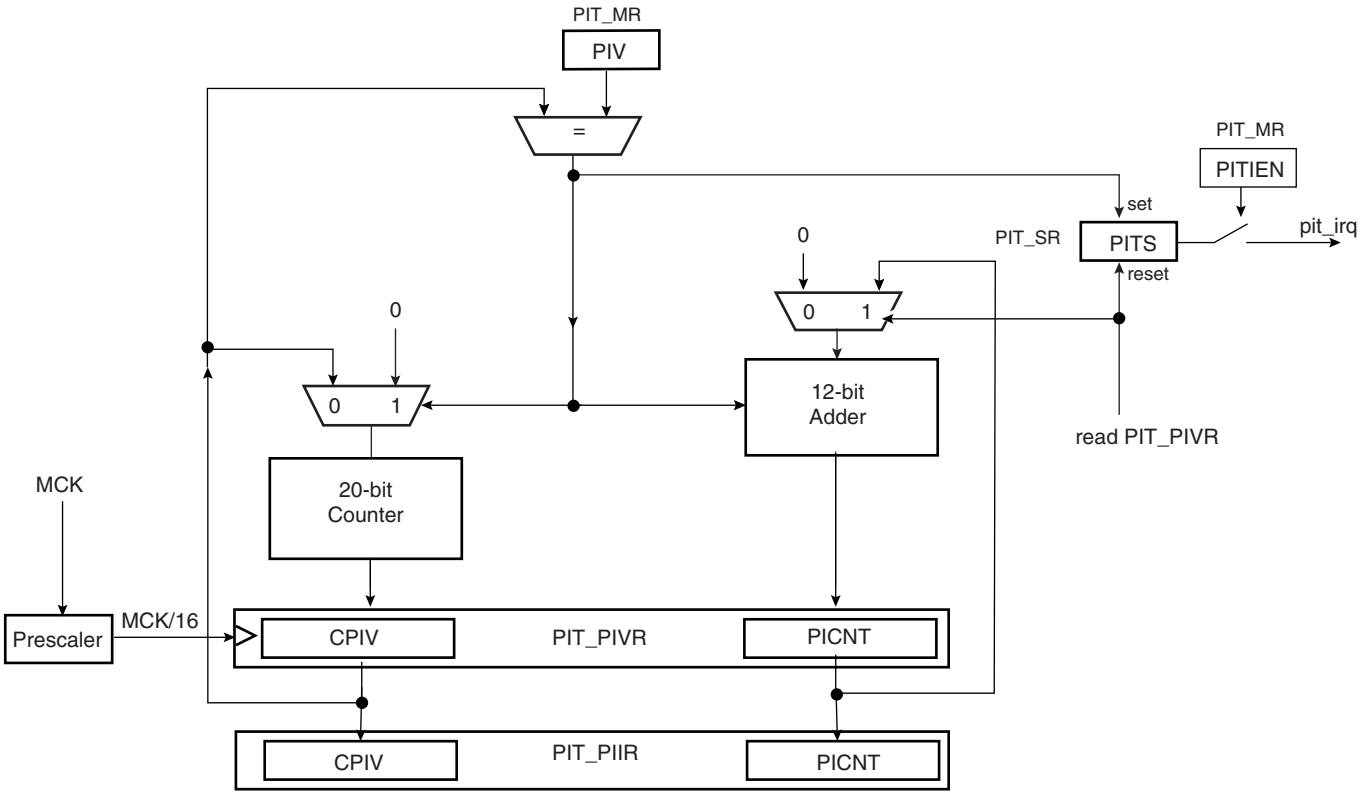

15.4 Functional Description

The Periodic Interval Timer aims at providing periodic interrupts for use by operating systems.

The PIT provides a programmable overflow counter and a reset-on-read feature. It is built around two counters: a 20-bit CPIV counter and a 12-bit PICNT counter. Both counters work at Master Clock /16.

The first 20-bit CPIV counter increments from 0 up to a programmable overflow value set in the field PIV of the Mode Register (PIT_MR). When the counter CPIV reaches this value, it resets to 0 and increments the Periodic Interval Counter, PICNT. The status bit PITS in the Status Register (PIT_SR) rises and triggers an interrupt, provided the interrupt is enabled (PITIEN in PIT_MR).

Writing a new PIV value in PIT_MR does not reset/restart the counters.

When CPIV and PICNT values are obtained by reading the Periodic Interval Value Register (PIT_PIVR), the overflow counter (PICNT) is reset and the PITS is cleared, thus acknowledging the interrupt. The value of PICNT gives the number of periodic intervals elapsed since the last read of PIT_PIVR.

When CPIV and PICNT values are obtained by reading the Periodic Interval Image Register (PIT_PIIR), there is no effect on the counters CPIV and PICNT, nor on the bit PITS. For example, a profiler can read PIT_PIIR without clearing any pending interrupt, whereas a timer interrupt clears the interrupt by reading PIT_PIVR.

The PIT may be enabled/disabled using the PITEN bit in the PIT_MR register (disabled on reset). The PITEN bit only becomes effective when the CPIV value is 0. Figure 15-2 illustrates the PIT counting. After the PIT Enable bit is reset (PITEN= 0), the CPIV goes on counting until the PIV value is reached, and is then reset. PIT restarts counting, only if the PITEN is set again.

The PIT is stopped when the core enters debug state.

Figure 15-2. Enabling/Disabling PIT with PITEN

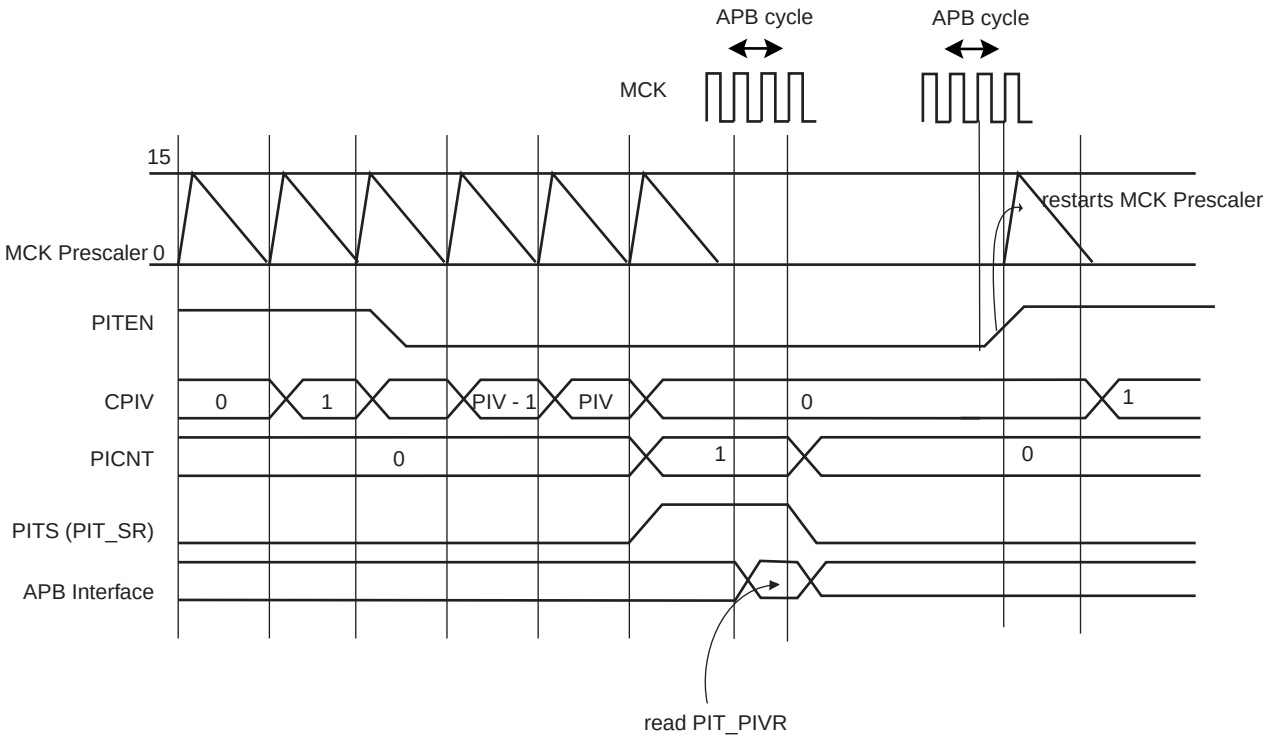

15.5 Periodic Interval Timer (PIT) User Interface

Table 15-1. Register Mapping

Offset	Register	Name	Access	Reset
0x00	Mode Register	PIT_MR	Read-write	0x000F_FFFF
0x04	Status Register	PIT_SR	Read-only	0x0000_0000
0x08	Periodic Interval Value Register	PIT_PIVR	Read-only	0x0000_0000
0x0C	Periodic Interval Image Register	PIT_PIIR	Read-only	0x0000_0000

15.5.1 Periodic Interval Timer Mode Register

Register Name: PIT_MR

Address: 0xFFFFFD30

Access Type: Read/Write

31	30	29	28	27	26	25	24
–	–	–	–	–	–	PITIEN	PITEN

23	22	21	20	19	18	17	16
–	–	–	–	PIV			

15	14	13	12	11	10	9	8
PIV							

7	6	5	4	3	2	1	0
PIV							

- **PIV: Periodic Interval Value**

Defines the value compared with the primary 20-bit counter of the Periodic Interval Timer (CPIV). The period is equal to (PIV + 1).

- **PITEN: Period Interval Timer Enabled**

0 = The Periodic Interval Timer is disabled when the PIV value is reached.

1 = The Periodic Interval Timer is enabled.

- **PITIEN: Periodic Interval Timer Interrupt Enable**

0 = The bit PITS in PIT_SR has no effect on interrupt.

1 = The bit PITS in PIT_SR asserts interrupt.

15.5.2 Periodic Interval Timer Status Register

Register Name: PIT_SR

Address: 0xFFFFFD34

Access Type: Read-only

31	30	29	28	27	26	25	24
–	–	–	–	–	–	–	–

23	22	21	20	19	18	17	16
–	–	–	–	–	–	–	–

15	14	13	12	11	10	9	8
–	–	–	–	–	–	–	–

7	6	5	4	3	2	1	0
–	–	–	–	–	–	–	PITS

- **PITS: Periodic Interval Timer Status**

0 = The Periodic Interval timer has not reached PIV since the last read of PIT_PIVR.

1 = The Periodic Interval timer has reached PIV since the last read of PIT_PIVR.

15.5.3 Periodic Interval Timer Value Register

Register Name: PIT_PIVR

Address: 0xFFFFFD38

Access Type: Read-only

31	30	29	28	27	26	25	24
PICNT							

23	22	21	20	19	18	17	16
PICNT				CPIV			

15	14	13	12	11	10	9	8
CPIV							

7	6	5	4	3	2	1	0
CPIV							

Reading this register clears PITS in PIT_SR.

- **CPIV: Current Periodic Interval Value**

Returns the current value of the periodic interval timer.

- **PICNT: Periodic Interval Counter**

Returns the number of occurrences of periodic intervals since the last read of PIT_PIVR.

15.5.4 Periodic Interval Timer Image Register

Register Name: PIT_PIIR

Address: 0xFFFFFD3C

Access Type: Read-only

31	30	29	28	27	26	25	24
PICNT							

23	22	21	20	19	18	17	16
PICNT				CPIV			

15	14	13	12	11	10	9	8
CPIV							

7	6	5	4	3	2	1	0
CPIV							

- **CPIV: Current Periodic Interval Value**

Returns the current value of the periodic interval timer.

- **PICNT: Periodic Interval Counter**

Returns the number of occurrences of periodic intervals since the last read of PIT_PIVR.

16. Watchdog Timer (WDT)

16.1 Description

The Watchdog Timer can be used to prevent system lock-up if the software becomes trapped in a deadlock. It features a 12-bit down counter that allows a watchdog period of up to 16 seconds (slow clock at 32.768 kHz). It can generate a general reset or a processor reset only. In addition, it can be stopped while the processor is in debug mode or idle mode.

16.2 Embedded Characteristics

- 16-bit key-protected only-once-Programmable Counter
- Windowed, prevents the processor to be in a dead-lock on the watchdog access

16.3 Block Diagram

Figure 16-1. Watchdog Timer Block Diagram

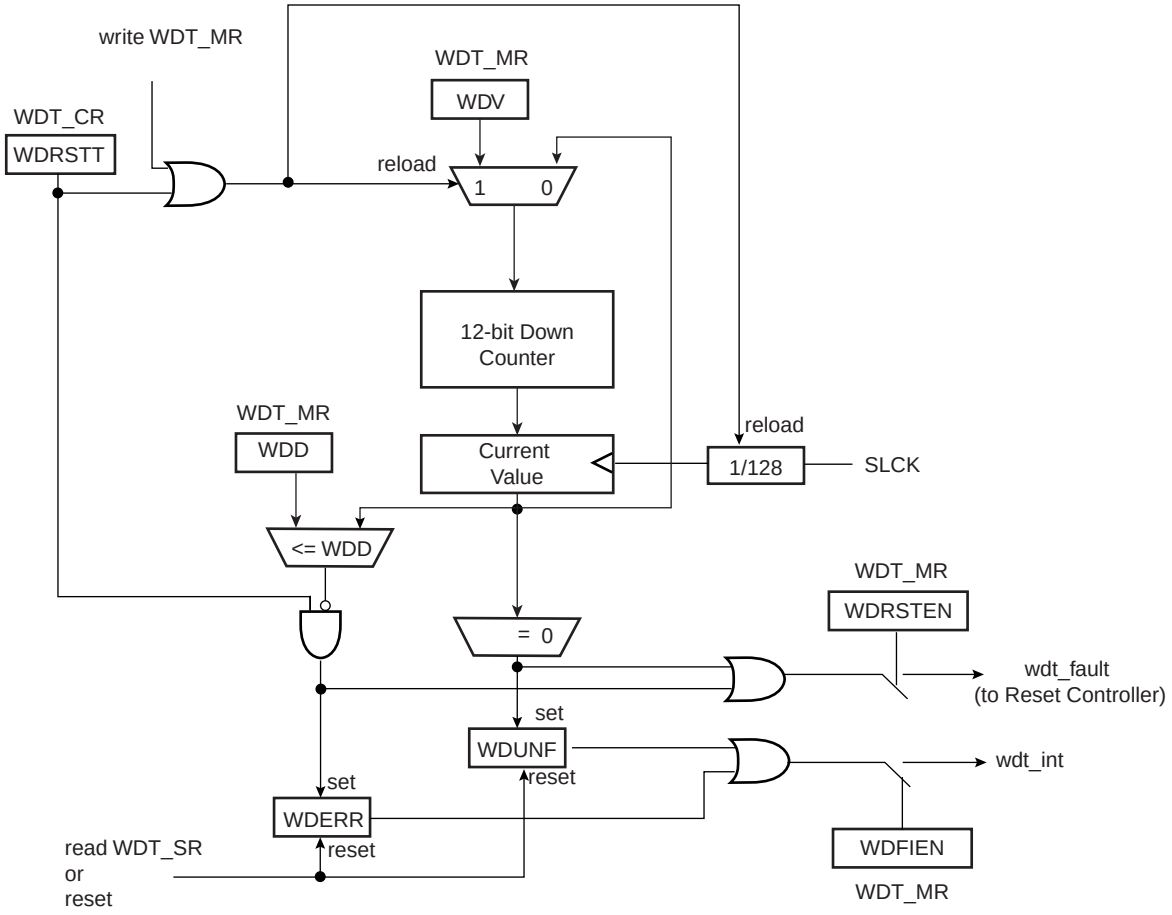

16.4 Functional Description

The Watchdog Timer can be used to prevent system lock-up if the software becomes trapped in a deadlock. It is supplied with VDDCORE. It restarts with initial values on processor reset.

The Watchdog is built around a 12-bit down counter, which is loaded with the value defined in the field WDV of the Mode Register (WDT_MR). The Watchdog Timer uses the Slow Clock divided by 128 to establish the maximum Watchdog period to be 16 seconds (with a typical Slow Clock of 32.768 kHz).

After a Processor Reset, the value of WDV is 0xFFF, corresponding to the maximum value of the counter with the external reset generation enabled (field WDRSTEN at 1 after a Backup Reset). This means that a default Watchdog is running at reset, i.e., at power-up. The user must either disable it (by setting the WDDIS bit in WDT_MR) if he does not expect to use it or must reprogram it to meet the maximum Watchdog period the application requires.

The Watchdog Mode Register (WDT_MR) can be written only once. Only a processor reset resets it. Writing the WDT_MR register reloads the timer with the newly programmed mode parameters.

In normal operation, the user reloads the Watchdog at regular intervals before the timer underflow occurs, by writing the Control Register (WDT_CR) with the bit WDRSTT to 1. The Watchdog counter is then immediately reloaded from WDT_MR and restarted, and the Slow Clock 128 divider is reset and restarted. The WDT_CR register is write-protected. As a result, writing WDT_CR without the correct hard-coded key has no effect. If an underflow does occur, the “wdt_fault” signal to the Reset Controller is asserted if the bit WDRSTEN is set in the Mode Register (WDT_MR). Moreover, the bit WDUNF is set in the Watchdog Status Register (WDT_SR).

To prevent a software deadlock that continuously triggers the Watchdog, the reload of the Watchdog must occur while the Watchdog counter is within a window between 0 and WDD, WDD is defined in the WatchDog Mode Register WDT_MR.

Any attempt to restart the Watchdog while the Watchdog counter is between WDV and WDD results in a Watchdog error, even if the Watchdog is disabled. The bit WDERR is updated in the WDT_SR and the “wdt_fault” signal to the Reset Controller is asserted.

Note that this feature can be disabled by programming a WDD value greater than or equal to the WDV value. In such a configuration, restarting the Watchdog Timer is permitted in the whole range [0; WDV] and does not generate an error. This is the default configuration on reset (the WDD and WDV values are equal).

The status bits WDUNF (Watchdog Underflow) and WDERR (Watchdog Error) trigger an interrupt, provided the bit WDFIEN is set in the mode register. The signal “wdt_fault” to the reset controller causes a Watchdog reset if the WDRSTEN bit is set as already explained in the reset controller programmer Datasheet. In that case, the processor and the Watchdog Timer are reset, and the WDERR and WDUNF flags are reset.

If a reset is generated or if WDT_SR is read, the status bits are reset, the interrupt is cleared, and the “wdt_fault” signal to the reset controller is deasserted.

Writing the WDT_MR reloads and restarts the down counter.

While the processor is in debug state or in idle mode, the counter may be stopped depending on the value programmed for the bits WDIDLEHLT and WDDBGHLT in the WDT_MR.

Figure 16-2. Watchdog Behavior

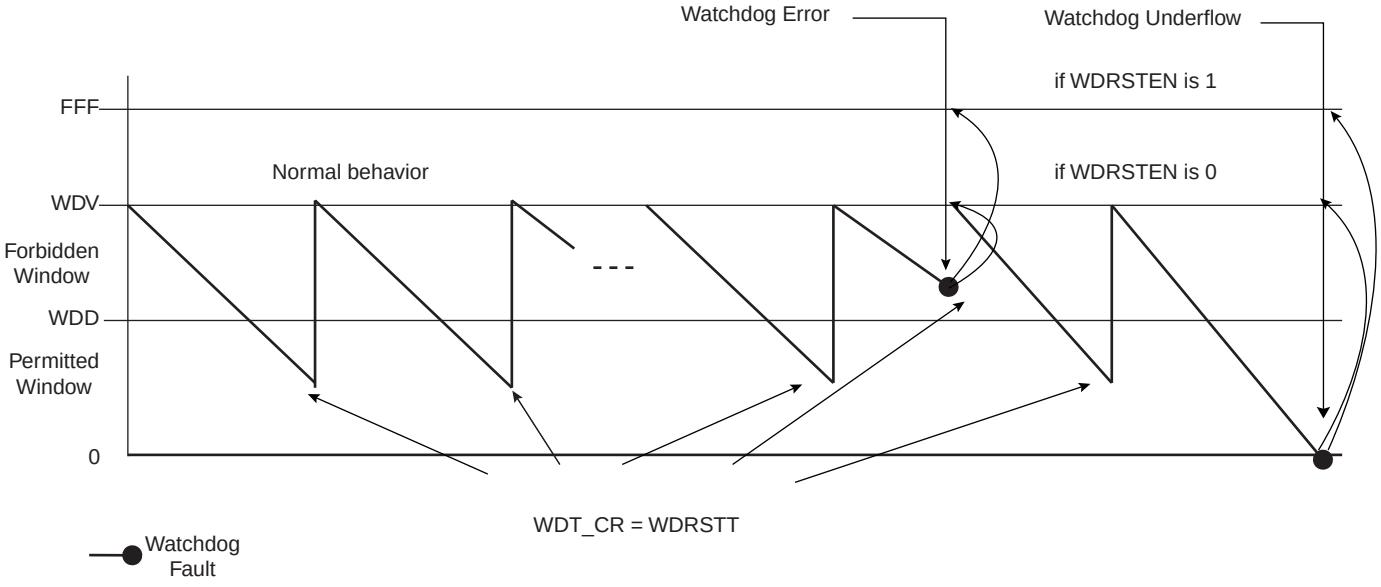

16.5 Watchdog Timer (WDT) User Interface

Table 16-1. Register Mapping

Offset	Register	Name	Access	Reset
0x00	Control Register	WDT_CR	Write-only	-
0x04	Mode Register	WDT_MR	Read-write Once	0x3FFF_2FFF
0x08	Status Register	WDT_SR	Read-only	0x0000_0000

16.5.1 Watchdog Timer Control Register

Register Name: WDT_CR

Address: 0xFFFFFD40

Access Type: Write-only

31	30	29	28	27	26	25	24
KEY							

23	22	21	20	19	18	17	16
–	–	–	–	–	–	–	–

15	14	13	12	11	10	9	8
–	–	–	–	–	–	–	–

7	6	5	4	3	2	1	0
–	–	–	–	–	–	–	WDRSTT

- **WDRSTT: Watchdog Restart**

0: No effect.

1: Restarts the Watchdog.

- **KEY: Password**

Should be written at value 0xA5. Writing any other value in this field aborts the write operation.

16.5.2 Watchdog Timer Mode Register

Register Name: WDT_MR

Address: 0xFFFFFD44

Access Type: Read-write Once

31	30	29	28	27	26	25	24
		WDIDLEHLT	WDDBGHLT	WDD			

23	22	21	20	19	18	17	16
WDD							

15	14	13	12	11	10	9	8
WDDIS	WDRPROC	WDRSTEN	WDFIEN	WDV			

7	6	5	4	3	2	1	0
WDV							

- **WDV: Watchdog Counter Value**

Defines the value loaded in the 12-bit Watchdog Counter.

- **WDFIEN: Watchdog Fault Interrupt Enable**

0: A Watchdog fault (underflow or error) has no effect on interrupt.

1: A Watchdog fault (underflow or error) asserts interrupt.

- **WDRSTEN: Watchdog Reset Enable**

0: A Watchdog fault (underflow or error) has no effect on the resets.

1: A Watchdog fault (underflow or error) triggers a Watchdog reset.

- **WDRPROC: Watchdog Reset Processor**

0: If WDRSTEN is 1, a Watchdog fault (underflow or error) activates all resets.

1: If WDRSTEN is 1, a Watchdog fault (underflow or error) activates the processor reset.

- **WDD: Watchdog Delta Value**

Defines the permitted range for reloading the Watchdog Timer.

If the Watchdog Timer value is less than or equal to WDD, writing WDT_CR with WDRSTT = 1 restarts the timer.

If the Watchdog Timer value is greater than WDD, writing WDT_CR with WDRSTT = 1 causes a Watchdog error.

- **WDDBGHLT: Watchdog Debug Halt**

0: The Watchdog runs when the processor is in debug state.

1: The Watchdog stops when the processor is in debug state.

- **WDIDLEHLT: Watchdog Idle Halt**

0: The Watchdog runs when the system is in idle mode.

1: The Watchdog stops when the system is in idle state.

- **WDDIS: Watchdog Disable**

0: Enables the Watchdog Timer.

1: Disables the Watchdog Timer.

16.5.3 Watchdog Timer Status Register

Register Name: WDT_SR

Address: 0xFFFFFD48

Access Type: Read-only

31	30	29	28	27	26	25	24
–	–	–	–	–	–	–	–

23	22	21	20	19	18	17	16
–	–	–	–	–	–	–	–

15	14	13	12	11	10	9	8
–	–	–	–	–	–	–	–

7	6	5	4	3	2	1	0
–	–	–	–	–	–	WDERR	WDUNF

- **WDUNF: Watchdog Underflow**

0: No Watchdog underflow occurred since the last read of WDT_SR.

1: At least one Watchdog underflow occurred since the last read of WDT_SR.

- **WDERR: Watchdog Error**

0: No Watchdog error occurred since the last read of WDT_SR.

1: At least one Watchdog error occurred since the last read of WDT_SR.

17. Shutdown Controller (SHDWC)

17.1 Description

The Shutdown Controller controls the power supplies VDDIO and VDDCORE and the wake-up detection on debounced input lines.

17.2 Embedded Characteristics

The Shut Down Controller is supplied on VDDBU and allows a software-controllable shut down of the system through the pin SHDN. An input change of the WKUP pin or an alarm releases the SHDN pin, and thus wakes up the system power supply.

17.3 Block Diagram

Figure 17-1. Shutdown Controller Block Diagram

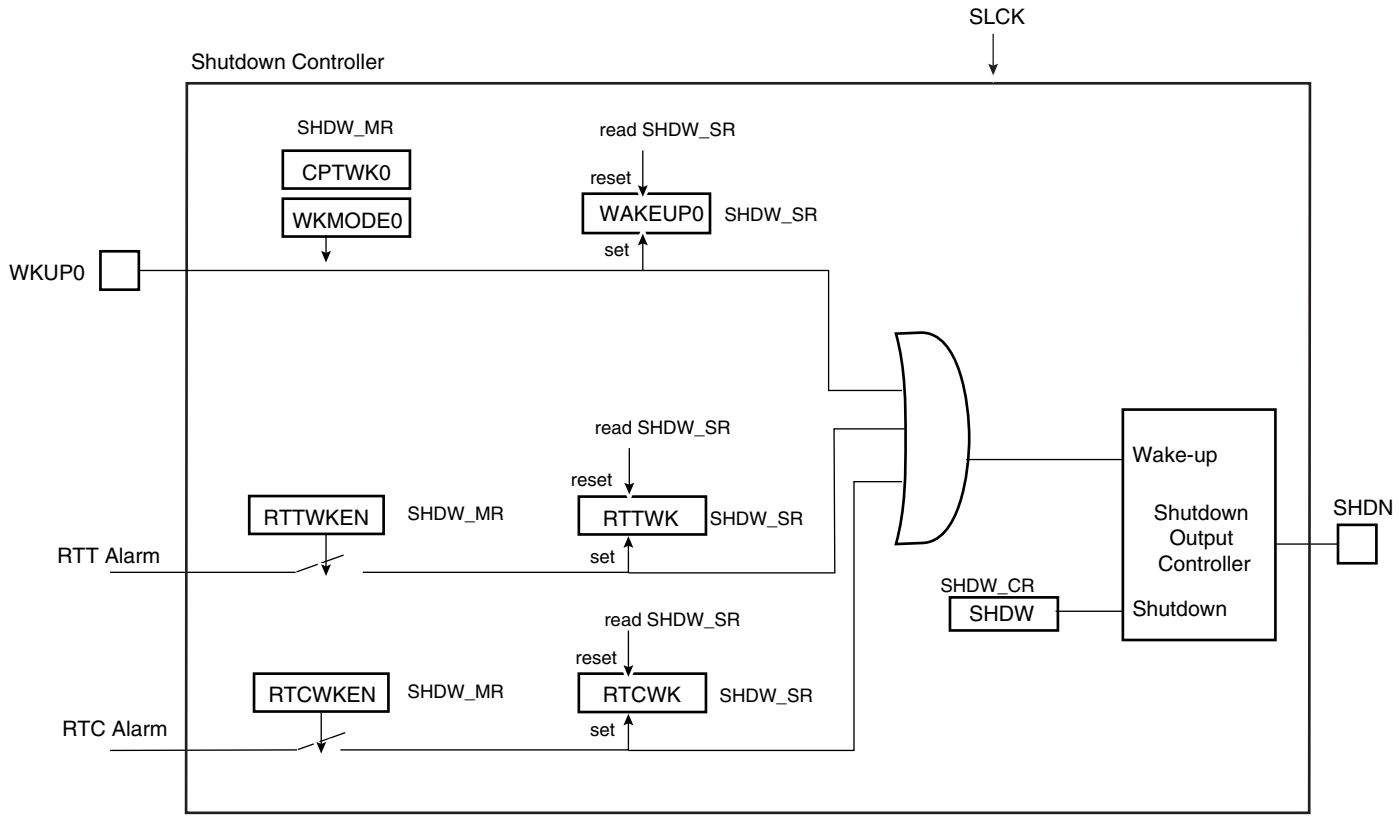

17.4 I/O Lines Description

Table 17-1. I/O Lines Description

Name	Description	Type
WKUP0	Wake-up 0 input	Input
SHDN	Shutdown output	Output

17.5 Product Dependencies

17.5.1 Power Management

The Shutdown Controller is continuously clocked by Slow Clock. The Power Management Controller has no effect on the behavior of the Shutdown Controller.

17.6 Functional Description

The Shutdown Controller manages the main power supply. To do so, it is supplied with VDDBU and manages wake-up input pins and one output pin, SHDN.

A typical application connects the pin SHDN to the shutdown input of the DC/DC Converter providing the main power supplies of the system, and especially VDDCORE and/or VDDIO. The wake-up inputs (WKUP0) connect to any push-buttons or signal that wake up the system.

The software is able to control the pin SHDN by writing the Shutdown Control Register (SHDW_CR) with the bit SHDW at 1. The shutdown is taken into account only 2 slow clock cycles after the write of SHDW_CR. This register is password-protected and so the value written should contain the correct key for the command to be taken into account. As a result, the system should be powered down.

A level change on WKUP0 is used as wake-up. Wake-up is configured in the Shutdown Mode Register (SHDW_MR). The transition detector can be programmed to detect either a positive or negative transition or any level change on WKUP0. The detection can also be disabled. Programming is performed by defining WKMODE0.

Moreover, a debouncing circuit can be programmed for WKUP0. The debouncing circuit filters pulses on WKUP0 shorter than the programmed number of 16 SLCK cycles in CPTWK0 of the SHDW_MR register. If the programmed level change is detected on a pin, a counter starts. When the counter reaches the value programmed in the corresponding field, CPTWK0, the SHDN pin is released. If a new input change is detected before the counter reaches the corresponding value, the counter is stopped and cleared. WAKEUP0 of the Status Register (SHDW_SR) reports the detection of the programmed events on WKUP0 with a reset after the read of SHDW_SR.

The Shutdown Controller can be programmed so as to activate the wake-up using the RTT alarm (the detection of the rising edge of the RTT alarm is synchronized with SLCK). This is done by writing the SHDW_MR register using the RTTWKEN fields. When enabled, the detection of the RTT alarm is reported in the RTTWK bit of the SHDW_SR Status register. It is reset after the read of SHDW_SR. When using the RTT alarm to wake up the system, the user must ensure that the RTT alarm status flag is cleared before shutting down the system. Otherwise, no rising edge of the status flag may be detected and the wake-up fails.

The Shutdown Controller can be programmed so as to activate the wake-up using the RTC alarm (the detection of the rising edge of the RTC alarm is synchronized with SLCK). This is done by writing the SHDW_MR register using the RTCWKEN field. When enabled, the detection of the RTC alarm is reported in the RTCWK bit of the SHDW_SR Status register. It is reset after the read of SHDW_SR. When using the RTC alarm to wake up the system, the user must ensure that the RTC alarm status flag is cleared before shutting down the system. Otherwise, no rising edge of the status flag may be detected and the wake-up fails fail.

17.7 Shutdown Controller (SHDWC) User Interface

Table 17-2. Register Mapping

Offset	Register	Name	Access	Reset
0x00	Shutdown Control Register	SHDW_CR	Write-only	-
0x04	Shutdown Mode Register	SHDW_MR	Read-write	0x0000_0003
0x08	Shutdown Status Register	SHDW_SR	Read-only	0x0000_0000

17.7.1 Shutdown Control Register

Register Name: SHDW_CR

Address: 0xFFFFFD10

Access Type: Write-only

31	30	29	28	27	26	25	24
KEY							

23	22	21	20	19	18	17	16
–	–	–	–	–	–	–	–

15	14	13	12	11	10	9	8
–	–	–	–	–	–	–	–

7	6	5	4	3	2	1	0
–	–	–	–	–	–	–	SHDW

- **SHDW: Shutdown Command**

0 = No effect.

1 = If KEY is correct, asserts the SHDN pin.

- **KEY: Password**

Should be written at value 0xA5. Writing any other value in this field aborts the write operation.

17.7.2 Shutdown Mode Register

Register Name: SHDW_MR

Address: 0xFFFFFD14

Access Type: Read/Write

31	30	29	28	27	26	25	24
–	–	–	–	–	–	–	–

23	22	21	20	19	18	17	16
–	–	–	–	–	–	RTCWKEN	RTTWKEN

15	14	13	12	11	10	9	8
–				–	–	–	

7	6	5	4	3	2	1	0
CPTWK0				–	–	WKMODE0	

- **WKMODE0: Wake-up Mode 0**

WKMODE[1:0]		Wake-up Input Transition Selection
0	0	None. No detection is performed on the wake-up input
0	1	Low to high level
1	0	High to low level
1	1	Both levels change

- **CPTWK0: Counter on Wake-up 0**

Defines the number of 16 Slow Clock cycles, the level detection on the corresponding input pin shall last before the wake-up event occurs. Because of the internal synchronization of WKUP0, the SHDN pin is released (CPTWK x 16 + 1) Slow Clock cycles after the event on WKUP.

- **RTTWKEN: Real-time Timer Wake-up Enable**

0 = The RTT Alarm signal has no effect on the Shutdown Controller.

1 = The RTT Alarm signal forces the de-assertion of the SHDN pin.

- **RTCWKEN: Real-time Clock Wake-up Enable**

0 = The RTC Alarm signal has no effect on the Shutdown Controller.

1 = The RTC Alarm signal forces the de-assertion of the SHDN pin.

17.7.3 Shutdown Status Register

Register Name: SHDW_SR

Address: 0xFFFFFD18

Access Type: Read-only

31	30	29	28	27	26	25	24
–	–	–	–	–	–	–	–

23	22	21	20	19	18	17	16
–	–	–	–	–	–	RTCWK	RTTWK

15	14	13	12	11	10	9	8
–	–	–	–	–	–	–	–

7	6	5	4	3	2	1	0
–	–	–	–	–	–	–	WAKEUP0

- **WAKEUP0: Wake-up 0 Status**

0 = No wake-up event occurred on the corresponding wake-up input since the last read of SHDW_SR.

1 = At least one wake-up event occurred on the corresponding wake-up input since the last read of SHDW_SR.

- **RTTWK: Real-time Timer Wake-up**

0 = No wake-up alarm from the RTT occurred since the last read of SHDW_SR.

1 = At least one wake-up alarm from the RTT occurred since the last read of SHDW_SR.

- **RTCWK: Real-time Clock Wake-up**

0 = No wake-up alarm from the RTC occurred since the last read of SHDW_SR.

1 = At least one wake-up alarm from the RTC occurred since the last read of SHDW_SR.

18. General Purpose Backup Registers (GPBR)

18.1 Description

The System Controller embeds Four general-purpose backup registers.

18.2 Embedded Characteristics

- Four 32-bit general-purpose backup registers

18.3 General Purpose Backup Registers (GPBR) User Interface

Table 18-1. Register Mapping

Offset	Register	Name	Access	Reset
0x0	General Purpose Backup Register 0	SYS_GPBR0	Read-write	–
...	...	...	...	...
0xc	General Purpose Backup Register 3	SYS_GPBR3	Read-write	–

18.3.0.1 General Purpose Backup Register x

Name: SYS_GPBRx

Addresses: 0xFFFFFD60 [0], 0xFFFFFD64 [1], 0xFFFFFD68 [2], 0xFFFFFD6C [3]

Type: Read-write

31	30	29	28	27	26	25	24
GPBR_VALUEx							

23	22	21	20	19	18	17	16
GPBR_VALUEx							

15	14	13	12	11	10	9	8
GPBR_VALUEx							

7	6	5	4	3	2	1	0
GPBR_VALUEx							

- **GPBR_VALUEx: Value of GPBR x**

19. Bus Matrix (MATRIX)

19.1 Description

The Bus Matrix implements a multi-layer AHB, based on the AHB-Lite protocol, that enables parallel access paths between multiple AHB masters and slaves in a system, thus increasing the overall bandwidth. The Bus Matrix interconnects up to 16 AHB masters to up to 16 AHB slaves. The normal latency to connect a master to a slave is one cycle except for the default master of the accessed slave which is connected directly (zero cycle latency).

The Bus Matrix user interface is compliant with ARM Advanced Peripheral Bus and provides a Chip Configuration User Interface with Registers that allow the Bus Matrix to support application specific features.

19.2 Embedded Characteristics

- 12-layer Matrix, handling requests from 11 masters
- Programmable Arbitration strategy
  - Fixed-priority Arbitration
  - Round-Robin Arbitration, either with no default master, last accessed default master or fixed default master
- Burst Management
  - Breaking with Slot Cycle Limit Support
  - Undefined Burst Length Support
- One Address Decoder provided per Master
- Boot Mode Select
  - Non-volatile Boot Memory can be internal ROM or external memory on EBI_NCS0
  - Selection is made by General purpose NVM bit sampled at reset
- Remap Command
  - Allows Remapping of an Internal SRAM in Place of the Boot Non-Volatile Memory (ROM or External Flash)
  - Allows Handling of Dynamic Exception Vectors

19.2.1 Matrix Masters

The Bus Matrix of the SAM9G45 manages Masters, thus each master can perform an access concurrently with others, depending on whether the slave it accesses is available.

Each Master has its own decoder, which can be defined specifically for each master. In order to simplify the addressing, all the masters have the same decodings.

Table 19-1. List of Bus Matrix Masters

Master 0	ARM926™ Instruction
Master 1	ARM926 Data
Master 2	Peripheral DMA Controller (PDC)
Master 3	USB HOST OHCI
Master 4	DMA
Master 5	DMA
Master 6	ISI Controller DMA
Master 7	LCD DMA

Table 19-1. List of Bus Matrix Masters (Continued)

Master 8	Ethernet MAC DMA
Master 9	USB Device High Speed DMA
Master 10	USB Host High Speed EHCI DMA
Master 11	Reserved

19.2.2 Matrix Slaves

Each Slave has its own arbiter, thus allowing a different arbitration per Slave to be programmed.

Table 19-2. List of Bus Matrix Slaves

Slave 0	Internal SRAM
Slave 1	Internal ROM
	USB OHCI
	USB EHCI
	UDP High Speed RAM
	LCD User Interface
	Reserved
Slave 2	DDR Port 0
Slave 3	DDR Port 1
Slave 4	DDR Port 2
Slave 5	DDR Port 3
Slave 6	External Bus Interface
Slave 7	Internal Peripherals

19.2.3 Masters to Slaves Access

All the Masters can normally access all the Slaves. However, some paths do not make sense, such as allowing access from the Ethernet MAC to the internal peripherals. Thus, these paths are forbidden or simply not wired, and shown as “-” in the following tables.

The four DDR ports are connected differently according to the application device.

The user can disable the DDR multi-port in the DDR multi-port Register (bit DDRMP_DIS) in the Chip Configuration User Interface.

- When the DDR multi-port is enabled (DDRMP_DIS=0), the ARM instruction and data are respectively connected to DDR Port 0 and DDR Port 1. The other masters share DDR Port 2 and DDR Port 3.
- When the DDR multi-port is disabled (DDRMP_DIS=1), DDR Port 1 is dedicated to the LCD controller. The remaining masters share DDR Port 2 and DDR Port 3.

Figure 19-1. DDR Multi-port

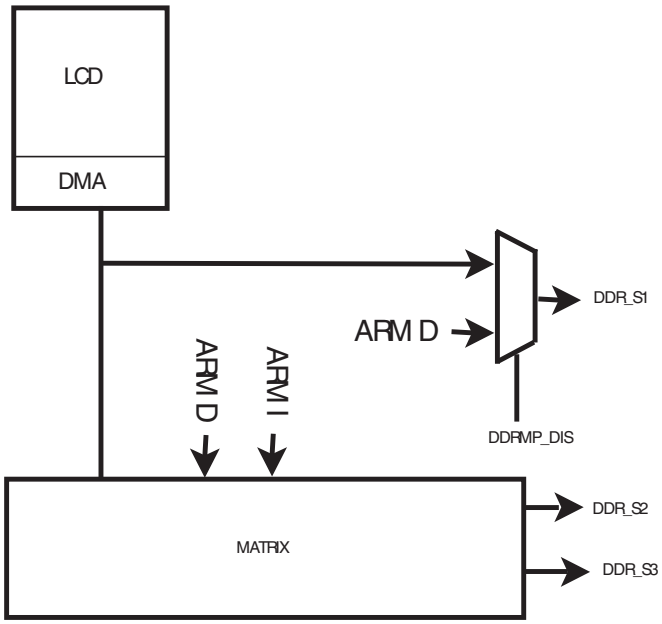

.

Table 19-3. Masters to Slaves Access DDRMP_DIS = 0

Master		0	1	2	3	4 & 5	6	7	8	9	10	11
Slave		ARM 926 Instr.	ARM 926 Data	PDC	USB Host OHCI	DMA	ISI DMA	LCD DMA	Ethernet MAC	USB Device HS	USB Host EHCI	Reserved
0	Internal SRAM 0	X	X	X	X	X	X	-	X	X	X	-
1	Internal ROM	X	X	X	-	-	-	-	-	X	-	-
	UHP OHCI	X	X	-	-	-	-	-	-	-	-	-
	UHP EHCI	X	X	-	-	-	-	-	-	-	-	-
	LCD User Int.	X	X	-	-	-	-	-	-	-	-	-
	UDPHS RAM	X	X	-	-	-	-	-	-	-	-	-
	Reserved	X	X	-	-	-	-	-	-	-	-	-
2	DDR Port 0	X	-	-	-	-	-	-	-	-	-	-
3	DDR Port 1	-	X	-	-	-	-	-	-	-	-	-
4	DDR Port 2	-	-	X	X	X	X	-	X	X	X	X
5	DDR Port 3	-	-	X	X	X	X	X	X	X	X	-
6	EBI	X	X	X	X	X	X	X	X	X	X	X
7	Internal Periph.	X	X	X	-	X	-	-	-	-	-	-

Table 19-4. Masters to Slaves Access with DDRMP_DIS = 1 (default)

Master		0	1	2	3	4 & 5	6	7	8	9	10	11
Slave		ARM 926 Instr.	ARM 926 Data	PDC	USB HOST OHCI	DMA	ISI DMA	LCD DMA	Ethernet MAC	USB Device HS	USB Host EHCI	Reserved
0	Internal SRAM 0	X	X	X	X	X	X	-	X	X	X	-
1	Internal ROM	X	X	X	-	-	-	-	-	X	-	-
	UHP OHCI	X	X	-	-	-	-	-	-	-	-	-
	UHP EHCI	X	X	-	-	-	-	-	-	-	-	-
	LCD User Int.	X	X	-	-	-	-	-	-	-	-	-
	UDPHS RAM	X	X	-	-	-	-	-	-	-	-	-
	Reserved	X	X	-	-	-	-	-	-	-	-	-
2	DDR Port 0	-	-	-	-	-	-	-	-	-	-	X
3	DDR Port 1	-	-	-	-	-	-	X	-	-	-	-
4	DDR Port 2	X	-	X	X	X	X	-	X	X	X	-
5	DDR Port 3	-	X	X	X	X	X	-	X	X	X	-
6	EBI	X	X	X	X	X	X	X	X	X	X	X
7	Internal Periph.	X	X	X	-	X	-	-	-	-	-	-

Table 19-5 summarizes the Slave Memory Mapping for each connected Master, depending on the Remap status (RCBx bit in Bus Matrix Master Remap Control Register MATRIX_MRCR) and the BMS state at reset.

Table 19-5. Internal Memory Mapping

	Master		
Slave Base Address	RCBx = 0		RCBx = 1
	BMS = 1	BMS = 0	
0x0000 0000	Internal ROM	EBI NCS0	Internal SRAM

19.3 Memory Mapping

The Bus Matrix provides one decoder for every AHB master interface. The decoder offers each AHB master several memory mappings. In fact, depending on the product, each memory area may be assigned to several slaves. Booting at the same address while using different AHB slaves (i.e. external RAM, internal ROM or internal Flash, etc.) becomes possible.

The Bus Matrix user interface provides Master Remap Control Register (MATRIX_MRCR) that performs remap action for every master independently.

19.4 Special Bus Granting Mechanism

The Bus Matrix provides some speculative bus granting techniques in order to anticipate access requests from some masters. This mechanism reduces latency at first access of a burst or single transfer as long as the slave is free from any other master access, but does not provide any benefit as soon as the slave is continuously accessed by more than one master, since arbitration is pipelined and then has no negative effect on the slave bandwidth or access latency.

This bus granting mechanism sets a different default master for every slave.

At the end of the current access, if no other request is pending, the slave remains connected to its associated default master. A slave can be associated with three kinds of default masters: no default master, last access master and fixed default master.

To change from one kind of default master to another, the Bus Matrix user interface provides the Slave Configuration Registers, one for each slave, that set a default master for each slave. The Slave Configuration Register contains two fields: DEFMSTR_TYPE and FIXED_DEFMSTR. The 2-bit DEFMSTR_TYPE field selects the default master type (no default, last access master, fixed default master), whereas the 4-bit FIXED_DEFMSTR field selects a fixed default master provided that DEFMSTR_TYPE is set to fixed default master. Please refer to Section 19.7.2 “Bus Matrix Slave Configuration Registers” on page 141.

19.4.1 No Default Master

After the end of the current access, if no other request is pending, the slave is disconnected from all masters. No Default Master suits low-power mode.

This configuration incurs one latency clock cycle for the first access of a burst after bus Idle. Arbitration without default master may be used for masters that perform significant bursts or several transfers with no Idle in between, or if the slave bus bandwidth is widely used by one or more masters.

This configuration provides no benefit on access latency or bandwidth when reaching maximum slave bus throughput whatever is the number of requesting masters.

19.4.2 Last Access Master

After the end of the current access, if no other request is pending, the slave remains connected to the last master that performed an access request.

This allows the Bus Matrix to remove the one latency cycle for the last master that accessed the slave. Other non privileged masters still get one latency clock cycle if they want to access the same slave. This technique is useful for masters that mainly perform single accesses or short bursts with some Idle cycles in between.

This configuration provides no benefit on access latency or bandwidth when reaching maximum slave bus throughput whatever is the number of requesting masters.

19.4.3 Fixed Default Master

After the end of the current access, if no other request is pending, the slave connects to its fixed default master. Unlike last access master, the fixed master does not change unless the user modifies it by a software action (field FIXED_DEFMSTR of the related MATRIX_SCFG).

This allows the Bus Matrix arbiters to remove the one latency clock cycle for the fixed default master of the slave. Every request attempted by this fixed default master will not cause any arbitration latency whereas other non privileged masters will still get one latency cycle. This technique is useful for a master that mainly perform single accesses or short bursts with some Idle cycles in between.

This configuration provides no benefit on access latency or bandwidth when reaching maximum slave bus throughput whatever is the number of requesting masters.

19.5 Arbitration

The Bus Matrix provides an arbitration mechanism that reduces latency when conflict cases occur, i.e. when two or more masters try to access the same slave at the same time. One arbiter per AHB slave is provided, thus arbitrating each slave differently.

The Bus Matrix provides the user with the possibility of choosing between 2 arbitration types or mixing them for each slave:

1. Round-Robin Arbitration (default)
2. Fixed Priority Arbitration

The resulting algorithm may be complemented by selecting a default master configuration for each slave.

When a re-arbitration must be done, specific conditions apply. See Section 19.5.1 “Arbitration Scheduling” on page 134.

19.5.1 Arbitration Scheduling

Each arbiter has the ability to arbitrate between two or more different master requests. In order to avoid burst breaking and also to provide the maximum throughput for slave interfaces, arbitration may only take place during the following cycles:

1. Idle Cycles: When a slave is not connected to any master or is connected to a master which is not currently accessing it.
2. Single Cycles: When a slave is currently doing a single access.
3. End of Burst Cycles: When the current cycle is the last cycle of a burst transfer. For defined length burst, predicted end of burst matches the size of the transfer but is managed differently for undefined length burst. See “Undefined Length Burst Arbitration” on page 135
4. Slot Cycle Limit: When the slot cycle counter has reached the limit value indicating that the current master access is too long and must be broken. See “Slot Cycle Limit Arbitration” on page 135.

19.5.1.1 Undefined Length Burst Arbitration

In order to optimize AHB burst lengths and arbitration, it may be interesting to set a maximum for undefined length bursts (INCR). The Bus Matrix provides specific logic in order to re-arbitrate before the end of the INCR transfer. A predicted end of burst is used as a defined length burst transfer and can be selected from among the following Undefined Length Burst Type (ULBT) possibilities:

1. Unlimited: No predicted end of burst is generated and therefore INCR burst transfer will not be broken by this way, but will be able to complete unless broken at the Slot Cycle Limit. This is normally the default and should be let as is in order to be able to allow full 1 Kilobyte AHB intra-boundary 256-beat word bursts performed by some ATMEL AHB masters.
2. 1-beat bursts: Predicted end of burst is generated at each single transfer inside the INCR transfer.
3. 4-beat bursts: Predicted end of burst is generated at the end of each 4-beat boundary inside INCR transfer.
4. 8-beat bursts: Predicted end of burst is generated at the end of each 8-beat boundary inside INCR transfer.
5. 16-beat bursts: Predicted end of burst is generated at the end of each 16-beat boundary inside INCR transfer.
6. 32-beat bursts: Predicted end of burst is generated at the end of each 32-beat boundary inside INCR transfer.
7. 64-beat bursts: Predicted end of burst is generated at the end of each 64-beat boundary inside INCR transfer.
8. 128-beat bursts: Predicted end of burst is generated at the end of each 128-beat boundary inside INCR transfer.

Use of undefined length 16-beat bursts or less is discouraged since this generally decreases significantly overall bus bandwidth due to arbitration and slave latencies at each first access of a burst.

If the master does not permanently and continuously request the same slave or has an intrinsically limited average throughput, the ULBT should be let at its default unlimited value, knowing that the AHB specification natively limits all word bursts to 256 beats and double-word bursts to 128 beats because of its 1 Kilobyte address boundaries.

Unless duly needed the ULBT should be let to its default 0 value for power saving.

This selection can be done through the field ULBT of the Master Configuration Registers (MATRIX_MCFG).

19.5.1.2 Slot Cycle Limit Arbitration

The Bus Matrix contains specific logic to break long accesses, such as back to back undefined length bursts or very long bursts on a very slow slave (e.g., an external low speed memory). At each arbitration time a counter is loaded with the value previously written in the SLOT_CYCLE field of the related Slave Configuration Register (MATRIX_SCFG) and decreased at each clock cycle. When the counter elapses, the arbiter has the ability to re-arbitrate at the end of the current AHB bus access cycle.

Unless some master has a very tight access latency constraint which could lead to data overflow or underflow due to a badly undersized internal fifo with respect to its throughput, the Slot Cycle Limit should be disabled (SLOT_CYCLE = 0) or let to its default maximum value in order not to inefficiently break long bursts performed by some ATMEL masters.

However, the Slot Cycle Limit should not be disabled in the very particular case of a master capable of accessing the slave by performing back to back undefined length bursts shorter than the number of ULBT beats with no Idle cycle in between, since in this case the arbitration could be frozen all along the bursts sequence.

In most cases this feature is not needed and should be disabled for power saving.

Warning: This feature cannot prevent any slave from locking its access indefinitely.

19.5.2 Arbitration Priority Scheme

The bus Matrix arbitration scheme is organized in priority pools.

Round-Robin priority is used inside the highest and lowest priority pools, whereas fix level priority is used between priority pools and inside the intermediate priority pools.

For each slave, each master x is assigned to one of the slave priority pools through the Priority Registers for Slaves (MxPR fields of MATRIX_PRAS and MATRIX_PRBS). When evaluating masters requests, this programmed priority level always takes precedence.

After reset, all the masters are belonging to the lowest priority pool (MxPR = 0) and so are granted bus access in a true Round-Robin fashion.

The highest priority pool must be specifically reserved for masters requiring very low access latency. If more than one master belong to this pool, these will be granted bus access in a biased Round-Robin fashion which allow tight and deterministic maximum access latency from AHB bus request. In fact, at worst, any currently high priority master request will be granted after the current bus master access is ended and the other high priority pool masters, if any, have been granted once each.

The lowest priority pool shares the remaining bus bandwidth between AHB Masters.

Intermediate priority pools allow fine priority tuning. Typically, a moderately latency critical master or a bandwidth only critical master will use such a priority level. The higher the priority level (MxPR value), the higher the master priority.

All combination of MxPR values are allowed for all masters and slaves. For example some masters might be assigned to the highest priority pool (round-robin) and the remaining masters to the lowest priority pool (round-robin), with no master for intermediate fix priority levels.

If more than one master is requesting the slave bus, whatever are the respective masters priorities, no master will be granted the slave bus for two consecutive runs. A master can only get back to back grants as long as it is the only requesting master.

19.5.2.1 Fixed Priority Arbitration

This arbitration algorithm is the first and only applied between masters from distinct priority pools. It is also used inside priority pools other than the highest and lowest ones (intermediate priority pools).

It allows the Bus Matrix arbiters to dispatch the requests from different masters to the same slave by using the fixed priority defined by the user in the MxPR field for each master inside the MATRIX_PRAS and MATRIX_PRBS Priority Registers. If two or more master requests are active at the same time, the master with the highest priority number MxPR is serviced first.

Inside intermediate priority pools, if two or more master requests with the same priority are active at the same time, the master with the highest number is serviced first.

19.5.2.2 Round-Robin Arbitration

This algorithm is only used inside the highest and lowest priority pools. It allows the Bus Matrix arbiters to dispatch the requests from different masters to the same slave in a fair way. If two or more master requests are active at the same time inside the priority pool, they are serviced in a round-robin increasing master number order.

19.6 Write Protect Registers

To prevent any single software error that may corrupt MATRIX behavior, the entire MATRIX address space from address offset 0x000 to 0x1FC can be write-protected by setting the WPEN bit in the MATRIX Write Protect Mode Register (MATRIX_WPMR).

If a write access to anywhere in the MATRIX address space from address offset 0x000 to 0x1FC is detected, then the WPVS flag in the MATRIX Write Protect Status Register (MATRIX_WPSR) is set and the field WPVSRC indicates in which register the write access has been attempted.

The WPVS flag is reset by writing the MATRIX Write Protect Mode Register (MATRIX_WPMR) with the appropriate access key WPKEY.

The protected registers are:

"Bus Matrix Master Configuration Registers"

"Bus Matrix Slave Configuration Registers"

"Bus Matrix Priority Registers A For Slaves"

"Bus Matrix Priority Registers B For Slaves"

"Bus Matrix Master Remap Control Register"

19.7 Bus Matrix (MATRIX) User Interface

Table 19-6. Register Mapping

Offset	Register	Name	Access	Reset
0x0000	Master Configuration Register 0	MATRIX_MCFG0	Read-write	0x00000001
0x0004	Master Configuration Register 1	MATRIX_MCFG1	Read-write	0x00000000
0x0008	Master Configuration Register 2	MATRIX_MCFG2	Read-write	0x00000000
0x000C	Master Configuration Register 3	MATRIX_MCFG3	Read-write	0x00000000
0x0010	Master Configuration Register 4	MATRIX_MCFG4	Read-write	0x00000000
0x0014	Master Configuration Register 5	MATRIX_MCFG5	Read-write	0x00000000
0x0018	Master Configuration Register 6	MATRIX_MCFG6	Read-write	0x00000000
0x001C	Master Configuration Register 7	MATRIX_MCFG7	Read-write	0x00000000
0x0020	Master Configuration Register 8	MATRIX_MCFG8	Read-write	0x00000000
0x0024	Master Configuration Register 9	MATRIX_MCFG9	Read-write	0x00000000
0x0028	Master Configuration Register 10	MATRIX_MCFG10	Read-write	0x00000000
0x002C - 0x003C	Reserved	–	–	–
0x0040	Slave Configuration Register 0	MATRIX_SCFG0	Read-write	0x000001FF
0x0044	Slave Configuration Register 1	MATRIX_SCFG1	Read-write	0x000001FF
0x0048	Slave Configuration Register 2	MATRIX_SCFG2	Read-write	0x000001FF
0x004C	Slave Configuration Register 3	MATRIX_SCFG3	Read-write	0x000001FF
0x0050	Slave Configuration Register 4	MATRIX_SCFG4	Read-write	0x000001FF
0x0054	Slave Configuration Register 5	MATRIX_SCFG5	Read-write	0x000001FF
0x0058	Slave Configuration Register 6	MATRIX_SCFG6	Read-write	0x000001FF
0x005C	Slave Configuration Register 7	MATRIX_SCFG7	Read-write	0x000001FF
0x0060 - 0x007C	Reserved	–	–	–
0x0080	Priority Register A for Slave 0	MATRIX_PRAS0	Read-write	0x00000000
0x0084	Priority Register B for Slave 0	MATRIX_PRBS0	Read-write	0x00000000
0x0088	Priority Register A for Slave 1	MATRIX_PRAS1	Read-write	0x00000000
0x008C	Priority Register B for Slave 1	MATRIX_PRBS1	Read-write	0x00000000
0x0090	Priority Register A for Slave 2	MATRIX_PRAS2	Read-write	0x00000000
0x0094	Priority Register B for Slave 2	MATRIX_PRBS2	Read-write	0x00000000
0x0098	Priority Register A for Slave 3	MATRIX_PRAS3	Read-write	0x00000000
0x009C	Priority Register B for Slave 3	MATRIX_PRBS3	Read-write	0x00000000
0x00A0	Priority Register A for Slave 4	MATRIX_PRAS4	Read-write	0x00000000
0x00A4	Priority Register B for Slave 4	MATRIX_PRBS4	Read-write	0x00000000
0x00A8	Priority Register A for Slave 5	MATRIX_PRAS5	Read-write	0x00000000
0x00AC	Priority Register B for Slave 5	MATRIX_PRBS5	Read-write	0x00000000
0x00B0	Priority Register A for Slave 6	MATRIX_PRAS6	Read-write	0x00000000
0x00B4	Priority Register B for Slave 6	MATRIX_PRBS6	Read-write	0x00000000

Table 19-6. Register Mapping (Continued)

Offset	Register	Name	Access	Reset
0x00B8	Priority Register A for Slave 7	MATRIX_PRAS7	Read-write	0x00000000
0x00BC	Priority Register B for Slave 7	MATRIX_PRBS7	Read-write	0x00000000
0x00C0 - 0x00FC	Reserved	–	–	–
0x0100	Master Remap Control Register	MATRIX_MRCR	Read-write	0x00000000
0x0104 - 0x010C	Reserved	–	–	–
0x0110 - 0x01E0	Chip Configuration Registers	–	–	–
0x01E4	Write Protect Mode Register	MATRIX_WPMR	Read-write	0x00000000
0x01E8	Write Protect Status Register	MATRIX_WPSR	Read-only	0x00000000

19.7.1 Bus Matrix Master Configuration Registers

Name: MATRIX_MCFG0...MATRIX_MCFG10

Address: 0xFFFFEA00

Access: Read-write

31	30	29	28	27	26	25	24
–	–	–	–	–	–	–	–

23	22	21	20	19	18	17	16
–	–	–	–	–	–	–	–

15	14	13	12	11	10	9	8
–	–	–	–	–	–	–	–

7	6	5	4	3	2	1	0
–	–	–	–	–	ULBT		

This register can only be written if the WPEN bit is cleared in the "Write Protect Mode Register" .

- **ULBT: Undefined Length Burst Type**

0: Unlimited Length Burst

No predicted end of burst is generated and therefore INCR bursts coming from this master can only be broken if the Slave Slot Cycle Limit is reached. If the Slot Cycle Limit is not reached, the burst is normally completed by the master, at the latest, on the next AHB 1 Kbyte address boundary, allowing up to 256-beat word bursts or 128-beat double-word bursts.

1: Single Access

The undefined length burst is treated as a succession of single accesses, allowing re-arbitration at each beat of the INCR burst.

2: 4-beat Burst

The undefined length burst is split into 4-beat bursts, allowing re-arbitration at each 4-beat burst end.

3: 8-beat Burst

The undefined length burst is split into 8-beat bursts, allowing re-arbitration at each 8-beat burst end.

4: 16-beat Burst

The undefined length burst is split into 16-beat bursts, allowing re-arbitration at each 16-beat burst end.

5: 32-beat Burst

The undefined length burst is split into 32-beat bursts, allowing re-arbitration at each 32-beat burst end.

6: 64-beat Burst

The undefined length burst is split into 64-beat bursts, allowing re-arbitration at each 64-beat burst end.

7: 128-beat Burst

The undefined length burst is split into 128-beat bursts, allowing re-arbitration at each 128-beat burst end.

Unless duly needed the ULBT should be let to its default 0 value for power saving.

19.7.2 Bus Matrix Slave Configuration Registers

Name: MATRIX_SCFG0...MATRIX_SCFG7

Address: 0xFFFFEA40

Access: Read-write

31	30	29	28	27	26	25	24
–	–	–	–	–	–	–	–

23	22	21	20	19	18	17	16
–	–	FIXED_DEFMSTR				DEFMSTR_TYPE	

15	14	13	12	11	10	9	8
–	–	–	–	–	–	–	SLOT_CYCLE

7	6	5	4	3	2	1	0
SLOT_CYCLE							

This register can only be written if the WPEN bit is cleared in the “Write Protect Mode Register” .

- **SLOT_CYCLE: Maximum Bus Grant Duration for Masters**

When SLOT_CYCLE AHB clock cycles have elapsed since the last arbitration, a new arbitration takes place so as to let an other master access this slave. If an other master is requesting the slave bus, then the current master burst is broken.

If SLOT_CYCLE = 0, the Slot Cycle Limit feature is disabled and bursts always complete unless broken according to the ULBT.

This limit has been placed in order to enforce arbitration so as to meet potential latency constraints of masters waiting for slave access or in the particular case of a master performing back to back undefined length bursts indefinitely freezing the arbitration.

This limit must not be small. Unreasonably small values break every burst and the Bus Matrix arbitrates without performing any data transfer. The default maximum value is usually an optimal conservative choice.

In most cases this feature is not needed and should be disabled for power saving.

See “Slot Cycle Limit Arbitration” on page 135 for details.

- **DEFMSTR_TYPE: Default Master Type**

0: No Default Master

At the end of the current slave access, if no other master request is pending, the slave is disconnected from all masters.

This results in a one clock cycle latency for the first access of a burst transfer or for a single access.

1: Last Default Master

At the end of the current slave access, if no other master request is pending, the slave stays connected to the last master having accessed it.

This results in not having one clock cycle latency when the last master tries to access the slave again.

2: Fixed Default Master

At the end of the current slave access, if no other master request is pending, the slave connects to the fixed master the number that has been written in the FIXED_DEFMSTR field.

This results in not having one clock cycle latency when the fixed master tries to access the slave again.

- **FIXED_DEFMSTR: Fixed Default Master**

This is the number of the Default Master for this slave. Only used if DEFMSTR_TYPE is 2. Specifying the number of a master which is not connected to the selected slave is equivalent to setting DEFMSTR_TYPE to 0.

19.7.3 Bus Matrix Priority Registers A For Slaves

Name: MATRIX_PRAS0...MATRIX_PRAS7

Addresses: 0xFFFFEA80 [0], 0xFFFFEA88 [1], 0xFFFFEA90 [2], 0xFFFFEA98 [3], 0xFFFFEAA0 [4], 0xFFFFEAA8 [5], 0xFFFFEAB0 [6], 0xFFFFEAB8 [7]

Access: Read-write

31	30	29	28	27	26	25	24
–	–	M7PR		–	–	M6PR	

23	22	21	20	19	18	17	16
–	–	M5PR		–	–	M4PR	

15	14	13	12	11	10	9	8
–	–	M3PR		–	–	M2PR	

7	6	5	4	3	2	1	0
–	–	M1PR		–	–	M0PR	

This register can only be written if the WPEN bit is cleared in the “Write Protect Mode Register” .

- **MxPR: Master x Priority**

Fixed priority of Master x for accessing the selected slave. The higher the number, the higher the priority.

All the masters programmed with the same MxPR value for the slave make up a priority pool.

Round-Robin arbitration is used inside the lowest (MxPR = 0) and highest (MxPR = 3) priority pools.

Fixed priority is used inside intermediate priority pools (MxPR = 1) and (MxPR = 2).

See Section 19.5.2 “Arbitration Priority Scheme” for details.

19.7.4 Bus Matrix Priority Registers B For Slaves

Name: MATRIX_PRBS0...MATRIX_PRBS7

Addresses: 0xFFFFEA84 [0], 0xFFFFEA8C [1], 0xFFFFEA94 [2], 0xFFFFEA9C [3], 0xFFFFEAA4 [4], 0xFFFFEAAC [5], 0xFFFFEAB4 [6], 0xFFFFEABC [7]

Access: Read-write

31	30	29	28	27	26	25	24
–	–	–	–	–	–	–	–

23	22	21	20	19	18	17	16
–	–	–	–	–	–	–	–

15	14	13	12	11	10	9	8
–	–	–	–	–		M10PR	

7	6	5	4	3	2	1	0
–	–	M9PR		–	–	M8PR	

This register can only be written if the WPEN bit is cleared in the “Write Protect Mode Register” .

- **MxPR: Master x Priority**

Fixed priority of Master x for accessing the selected slave. The higher the number, the higher the priority.

All the masters programmed with the same MxPR value for the slave make up a priority pool.

Round-Robin arbitration is used inside the lowest (MxPR = 0) and highest (MxPR = 3) priority pools.

Fixed priority is used inside intermediate priority pools (MxPR = 1) and (MxPR = 2).

See Section 19.5.2 “Arbitration Priority Scheme” for details.

19.7.5 Bus Matrix Master Remap Control Register

Name: MATRIX_MRCR

Address: 0xFFFFEB00

Access: Read-write

31	30	29	28	27	26	25	24
–	–	–	–	–	–	–	–

23	22	21	20	19	18	17	16
–	–	–	–	–	–	–	–

15	14	13	12	11	10	9	8
–	–	–	–	–	RCB10	RCB9	RCB8

7	6	5	4	3	2	1	0
RCB7	RCB6	RCB5	RCB4	RCB3	RCB2	RCB1	RCB0

This register can only be written if the WPEN bit is cleared in the “Write Protect Mode Register” .

- **RCB: Remap Command Bit for Master x**

0: Disable remapped address decoding for the selected Master

1: Enable remapped address decoding for the selected Master

19.7.6 Chip Configuration User Interface

Table 19-7. Chip Configuration User Interface

Offset	Register	Name	Access	Reset
0x0110	Bus Matrix TCM Configuration Register	CCFG_TCMR	Read-write	0x00000000
0x0114	Reserved	–	–	–
0x0118	DDR Multi-Port Register	CCFG_DDRMPR	Read-write	0x00000001
0x011C - 0x0124	Reserved	–	–	–
0x0128	EBI Chip Select Assignment Register	CCFG_EBICSA	Read-write	0x00070000
0x012C - 0x01FC	Reserved	–	–	–

19.7.6.1 Bus Matrix TCM Configuration Register

Name: CCFG_TCMR

Access: Read-write

Reset: 0x0000_0000

31	30	29	28	27	26	25	24
–	–	–	–	–	–	–	–

23	22	21	20	19	18	17	16
–	–	–	–	–	–	–	–

15	14	13	12	11	10	9	8
–	–	–	–	TCM_NWS	–	–	–

7	6	5	4	3	2	1	0
DTCM_SIZE				ITCM_SIZE			

- **ITCM_SIZE: Size of ITCM enabled memory block**

000: 0 Kbyte (No ITCM Memory)

110: 32 Kbyte

Others: Reserved

- **DTCM_SIZE: Size of DTCM enabled memory block**

000: 0 Kbyte (No DTCM Memory)

110: 32 Kbyte

111: 64 Kbyte

Others: Reserved

- **TCM_NWS: TCM Wait State**

0: no TCM Wait State

1: 1 TCM Wait State (only for ration 3:1 or 4:1)

19.7.6.2 Bus Matrix DDR Multi-Port Register

Register Name: CCFG_DDRMPR

Access Type: Read-write

Reset: 0x0000_0001

31	30	29	28	27	26	25	24
–	–	–	–	–	–	–	–

23	22	21	20	19	18	17	16
–	–	–	–	–	–	–	–

15	14	13	12	11	10	9	8
–	–	–	–	–	–	–	–

7	6	5	4	3	2	1	0
–	–	–	–	–	–	–	DDRMP_DIS

- **DDRMP_DIS: DDR Multi-Port Disable**

0: Multi-Port is enabled

1: Multi-Port is disabled

19.7.6.3 EBI Chip Select Assignment Register

Name: CCFG_EBICSA

Access: Read-write

Reset: 0x00070000

31	30	29	28	27	26	25	24
–	–	–	–	–	–	–	–

23	22	21	20	19	18	17	16
–	–	–	–	–	DDR_DRIVE	EBI_DRIVE	

15	14	13	12	11	10	9	8
–	–	–	–	–	–	–	EBI_DBPUC

7	6	5	4	3	2	1	0
–	–	EBI_CS5A	EBI_CS4A	EBI_CS3A	–	EBI_CS1A	–

- **EBI_CS1A: EBI Chip Select 1 Assignment**

0 = EBI Chip Select 1 is assigned to the Static Memory Controller.

1 = EBI Chip Select 1 is assigned to the SDRAM Controller.

- **EBI_CS3A: EBI Chip Select 3 Assignment**

0 = EBI Chip Select 3 is only assigned to the Static Memory Controller and EBI_NCS3 behaves as defined by the SMC.

1 = EBI Chip Select 3 is assigned to the Static Memory Controller and the SmartMedia Logic is activated.

- **EBI_CS4A: EBI Chip Select 4 Assignment**

0 = EBI Chip Select 4 is only assigned to the Static Memory Controller and EBI_NCS4 behaves as defined by the SMC.

1 = EBI Chip Select 4 is assigned to the Static Memory Controller and the Compact Flash Logic Slot 0 is activated.

- **EBI_CS5A: EBI Chip Select 5 Assignment**

0 = EBI Chip Select 5 is only assigned to the Static Memory Controller and EBI_NCS5 behaves as defined by the SMC.

1 = EBI Chip Select 5 is assigned to the Static Memory Controller and the Compact Flash Logic Slot 1 is activated.

- **EBI_DBPUC: EBI Data Bus Pull-Up Configuration**

0 = EBI D0 - D15 Data Bus bits are internally pulled-up to the VDDIOM1 power supply.

1 = EBI D0 - D15 Data Bus bits are not internally pulled-up.

- **EBI_DRIVE: EBI I/O Drive Configuration**

This allows to avoid overshoots and give the best performances according to the bus load and external memories.

Value	Drive configuration	Conditions
00	optimized for 1.8V powered memories with Low Drive	Maximum load capacitance < 30 pF
01	optimized for 3.3V powered memories with Low Drive	Maximum load capacitance < 30 pF
10	optimized for 1.8V powered memories with High Drive	Maximum load capacitance < 55 pF
11	optimized for 3.3V powered memories with High Drive	Maximum load capacitance < 55 pF

- **DDR_DRIVE: DDR2 dedicated port I/O slew rate selection**

This allows to avoid overshoots and give the best performances according to the bus load and external memories.

0 = Low Drive, optimized for load capacitance < 30 pF.

1 = High Drive, optimized for load capacitance < 55 pF.

Note: This concerns only stand-alone DDR controller.

19.7.7 Write Protect Mode Register

Name: MATRIX_WPMR

Address: 0xFFFFEBE4

Access: Read-write

31	30	29	28	27	26	25	24
WPKEY							

23	22	21	20	19	18	17	16
WPKEY							

15	14	13	12	11	10	9	8
WPKEY							

7	6	5	4	3	2	1	0
–	–	–	–	–	–	–	WPEN

For more details on MATRIX_WPMR, refer to Section 19.6 “Write Protect Registers” on page 137.

- **WPEN: Write Protect ENable**

0 = Disables the Write Protect if WPKEY corresponds to 0x4D4154 (“MAT” in ASCII).

1 = Enables the Write Protect if WPKEY corresponds to 0x4D4154 (“MAT” in ASCII).

Protects the entire MATRIX address space from address offset 0x000 to 0x1FC.

- **WPKEY: Write Protect KEY** (Write-only)

Should be written at value 0x4D4154 (“MAT” in ASCII). Writing any other value in this field aborts the write operation of the WPEN bit. Always reads as 0.

19.7.8 Write Protect Status Register

Name: MATRIX_WPSR

Address: 0xFFFFEBE8

Access: Read-only

31	30	29	28	27	26	25	24
–	–	–	–	–	–	–	–

23	22	21	20	19	18	17	16
WPVSRC							

15	14	13	12	11	10	9	8
WPVSRC							

7	6	5	4	3	2	1	0
–	–	–	–	–	–	–	WPVS

For more details on MATRIX_WPSR, refer to Section 19.6 “Write Protect Registers” on page 137.

- **WPVS: Write Protect Violation Status**

0: No Write Protect Violation has occurred since the last write of the MATRIX_WPMR.

1: At least one Write Protect Violation has occurred since the last write of the MATRIX_WPMR.

- **WPVSRC: Write Protect Violation Source**

When WPVS is active, this field indicates the register address offset in which a write access has been attempted.

Otherwise it reads as 0.

20. External Memories

The product embeds two DDRSDR controllers: DDRSDRC0 and DDRSDRC1.

Figure 20-1. DDRSDR Controllers

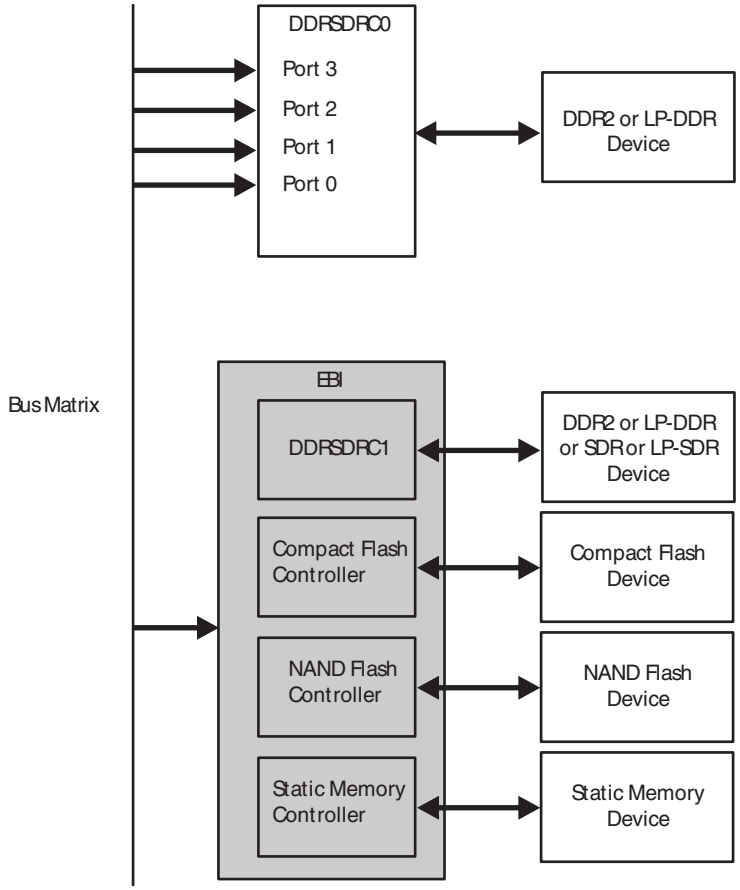

- DDRSDRC0 is a multi-port DDRSDR controller, standalone. It supports only DDR2 and LP-DDR devices. Its user interface is located at 0xFFFFE600.
- DDRSDRC1 is a single-port DDRSDR controller, embedded in EBI. It supports DDR2, LPDDR, SDR and LP-SDR devices. Its user interface is located at 0xFFFFE400.

Both are described in the SDR SDRAM Controller (DDRSDRC) section.

All references to SDR and LPSDR must be ignored for DDRSDRC0, multi-port DDRSDR controller.

All references to multi-port must be ignored for DDRSDRC1, DDRSDR controller embedded in EBI.

20.1 DDRSDRC0 Multi-port DDRSDR Controller

20.1.1 Description

The DDR2 Controller is dedicated to 4-port DDR2/LPDDR support. Data transfers are performed through a 16-bit data bus on one chip select. The DDR2 Controller operates with 1.8V Power Supply (VDDIOM0).

20.1.2 Embedded Characteristics

20.1.2.1 DDR2/LPDDR Controller

Four AHB Interfaces, Management of All Accesses Maximizes Memory Bandwidth and Minimizes Transaction Latency.

- Supports AHB Transfers:
  - Word, Half Word, Byte Access.
- Supports DDR-SDRAM 2, LPDDR
- Numerous Configurations Supported
  - 2K, 4K, 8K, 16K Row Address Memory Parts
  - DDR2 with Four Internal Banks
  - DDR2/LPDDR with 16-bit Data Path
  - One Chip Select for DDR2/LPDDR Device (256 Mbytes Address Space)
- Programming Facilities
  - Multibank Ping-pong Access (Up to 4 Banks Opened at Same Time = Reduces Average Latency of Transactions)
  - Timing Parameters Specified by Software
  - Automatic Refresh Operation, Refresh Rate is Programmable
  - Automatic Update of DS, TCR and PASR Parameters
- Energy-saving Capabilities
  - Self-refresh, Power-down and Deep Power Modes Supported
- Power-up Initialization by Software
- CAS Latency of 2, 3 Supported
- Reset function supported (DDR2)
- Auto Precharge Command Not Used
- On Die Termination not supported
- OCD mode not supported

20.1.3 DDR2 Controller Block Diagram

Figure 20-2. Organization of the DDR2

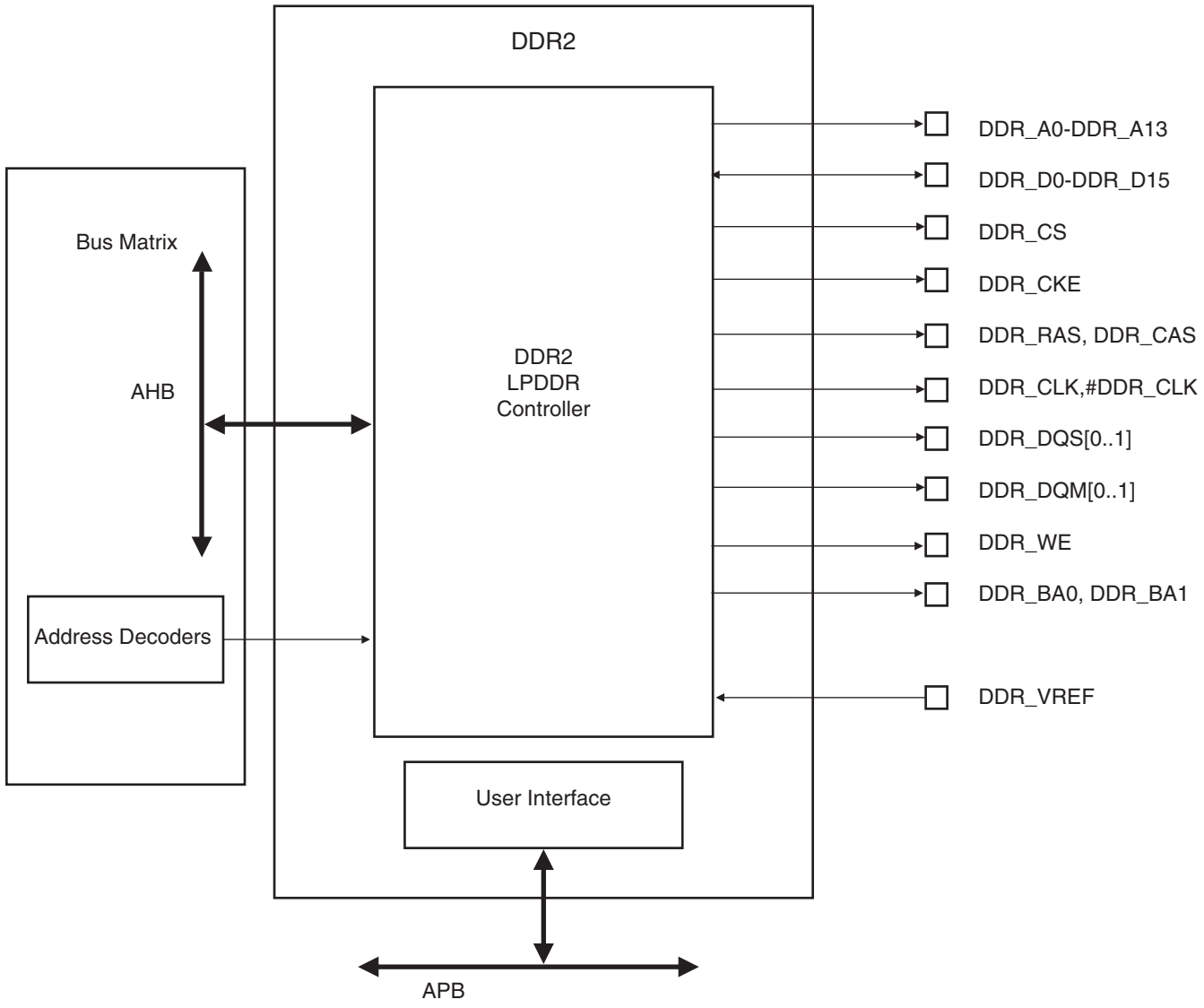

20.1.4 I/O Lines Description

Table 20-1. DDR2 I/O Lines Description

Name	Function	Type	Active Level
DDR2/LPDDR Controller			
DDR_D0 - DDR_D15	Data Bus	I/O	
DDR_A0 - DDR_A13	Address Bus	Output	
DDR_DQM0 - DDR_DQM1	Data Mask	Output	
DDR_DQS0 - DDR_DQS1	Data Strobe	Output	
DDR_VREF	Reference Voltage for DDR2 operations, typically 0.9V	Input	
DDR_CS	Chip Select	Output	Low
DDR_CLK - DDR_CLK#	DDR2 Differential Clock	Output	
DDR_CKE	Clock enable	Output	High
DDR_RAS	Row signal	Output	Low
DDR_CAS	Column signal	Output	Low
DDR_WE	Write enable	Output	Low
DDR_BA0 - DDR_BA1	Bank Select	Output	

20.1.5 Product Dependencies

The pins used for interfacing the DDR2 memory are not multiplexed with the PIO lines.

20.1.6 Implementation Example

The following hardware configuration is given for illustration only. The user should refer to the memory manufacturer web site to check current device availability.

20.1.6.1 2x8-bit DDR2

Hardware Configuration

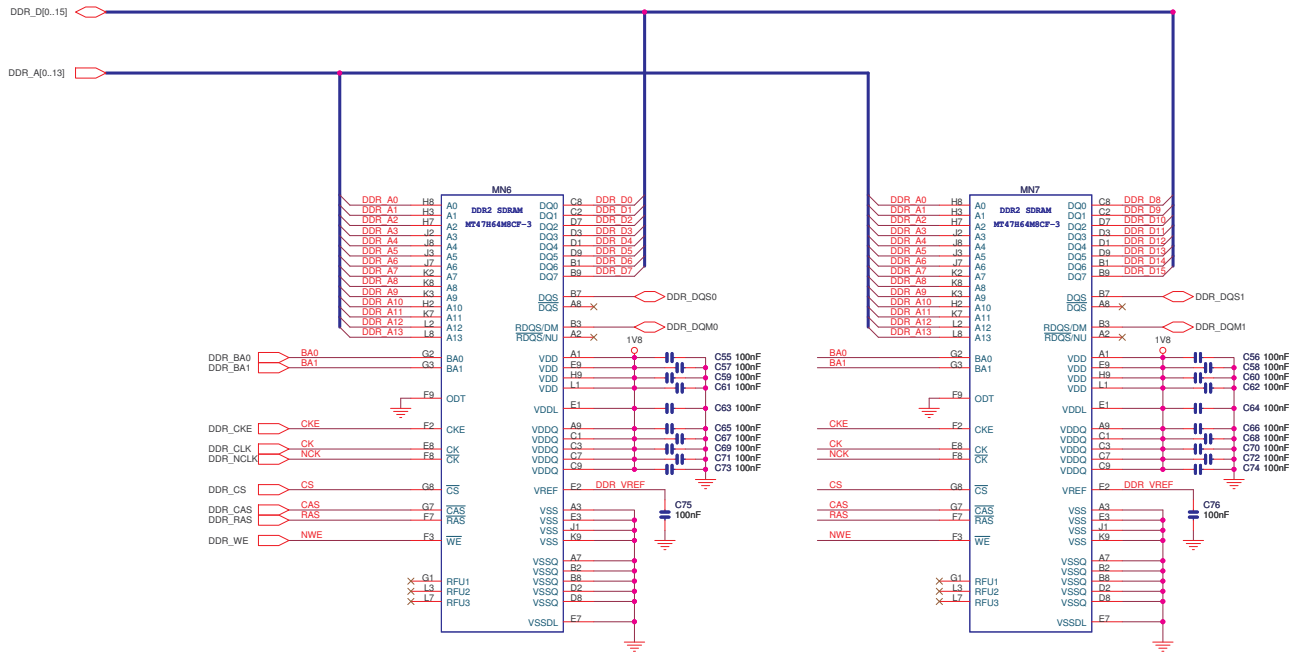

Software Configuration

The following configuration has to be performed:

- Initialize the DDR2 Controller depending on the DDR2 device and system bus frequency.

The DDR2 initialization sequence is described in the sub-section “DDR2 Device Initialization” of the DDRSDRC section.

20.2 External Bus Interface (EBI)

20.2.1 Description

The External Bus Interface (EBI) is designed to ensure the successful data transfer between several external devices and the embedded Memory Controller of an ARM-based device.

The Static Memory, DDR, SDRAM and ECC Controllers are all featured external Memory Controllers on the EBI. These external Memory Controllers are capable of handling several types of external memory and peripheral devices, such as SRAM, PROM, EPROM, EEPROM, Flash, DDR2 and SDRAM. The EBI operates with 1.8V or 3.3V Power Supply (VDDIOM1).

The EBI also supports the CompactFlash and the NAND Flash protocols via integrated circuitry that greatly reduces the requirements for external components. Furthermore, the EBI handles data transfers with up to six external devices, each assigned to six address spaces defined by the embedded Memory Controller. Data transfers are performed through a 16-bit or 32-bit data bus, an address bus of up to 26 bits, up to six chip select lines (NCS[5:0]) and several control pins that are generally multiplexed between the different external Memory Controllers.

20.2.2 Embedded Characteristics

The SAM9G45 features an External Bus Interface to interface to a wide range of external memories and to any parallel peripheral.

20.2.2.1 External Bus Interface

- Integrates Three External Memory Controllers:
  - Static Memory Controller
  - DDR2/SDRAM Controller
  - SLC Nand Flash ECC Controller
- Additional logic for NAND Flash and CompactFlash
- Optional Full 32-bit External Data Bus
- Up to 26-bit Address Bus (up to 64 MBytes linear per chip select)
- Up to 6 chip selects, Configurable Assignment:
  - Static Memory Controller on NCS0
  - DDR2/SDRAM Controller (SDCS) or Static Memory Controller on NCS1
  - Static Memory Controller on NCS2
  - Static Memory Controller on NCS3, Optional NAND Flash support
  - Static Memory Controller on NCS4 - NCS5, Optional CompactFlash^{M} support

20.2.2.2 Static Memory Controller

- 8-, 16- or 32-bit Data Bus
- Multiple Access Modes supported
  - Byte Write or Byte Select Lines
  - Asynchronous read in Page Mode supported (4- up to 32-byte page size)
- Multiple device adaptability
  - Control signals programmable setup, pulse and hold time for each Memory Bank
- Multiple Wait State Management
  - Programmable Wait State Generation
  - External Wait Request

  - Programmable Data Float Time
- Slow Clock mode supported

20.2.2.3 DDR2/SDR Controller

- Supports DDR/LPDDR, SDR-SDRAM and LPSDR
- Numerous Configurations Supported
  - 2K, 4K, 8K, 16K Row Address Memory Parts
  - SDRAM with Four Internal Banks
  - SDR-SDRAM with 16- or 32- bit Data Path
  - DDR2/LPDDR with 16- bit Data Path
  - One Chip Select for SDRAM Device (256 Mbyte Address Space)
- Programming Facilities
  - Multibank Ping-pong Access (Up to 4 Banks Opened at Same Time = Reduces Average Latency of Transactions)
  - Timing Parameters Specified by Software
  - Automatic Refresh Operation, Refresh Rate is Programmable
  - Automatic Update of DS, TCR and PASR Parameters (LPSDR)
- Energy-saving Capabilities
  - Self-refresh, Power-down and Deep Power Modes Supported
- SDRAM Power-up Initialization by Software
- CAS Latency of 2, 3 Supported
- Auto Precharge Command Not Used
- SDR-SDRAM with 16-bit Datapath and Eight Columns Not Supported
  - Clock Frequency Change in Precharge Power-down Mode Not Supported

20.2.2.4 NAND Flash Error Corrected Code Controller

- Tracking the accesses to a NAND Flash device by triggering on the corresponding chip select
- Single bit error correction and 2-bit Random detection.
- Automatic Hamming Code Calculation while writing
  - ECC value available in a register
- Automatic Hamming Code Calculation while reading
  - Error Report, including error flag, correctable error flag and word address being detected erroneous
  - Support 8- or 16-bit NAND Flash devices with 512-, 1024-, 2048- or 4096-bytes pages

20.2.3 EBI Block Diagram

Figure 20-3. Organization of the External Bus Interface

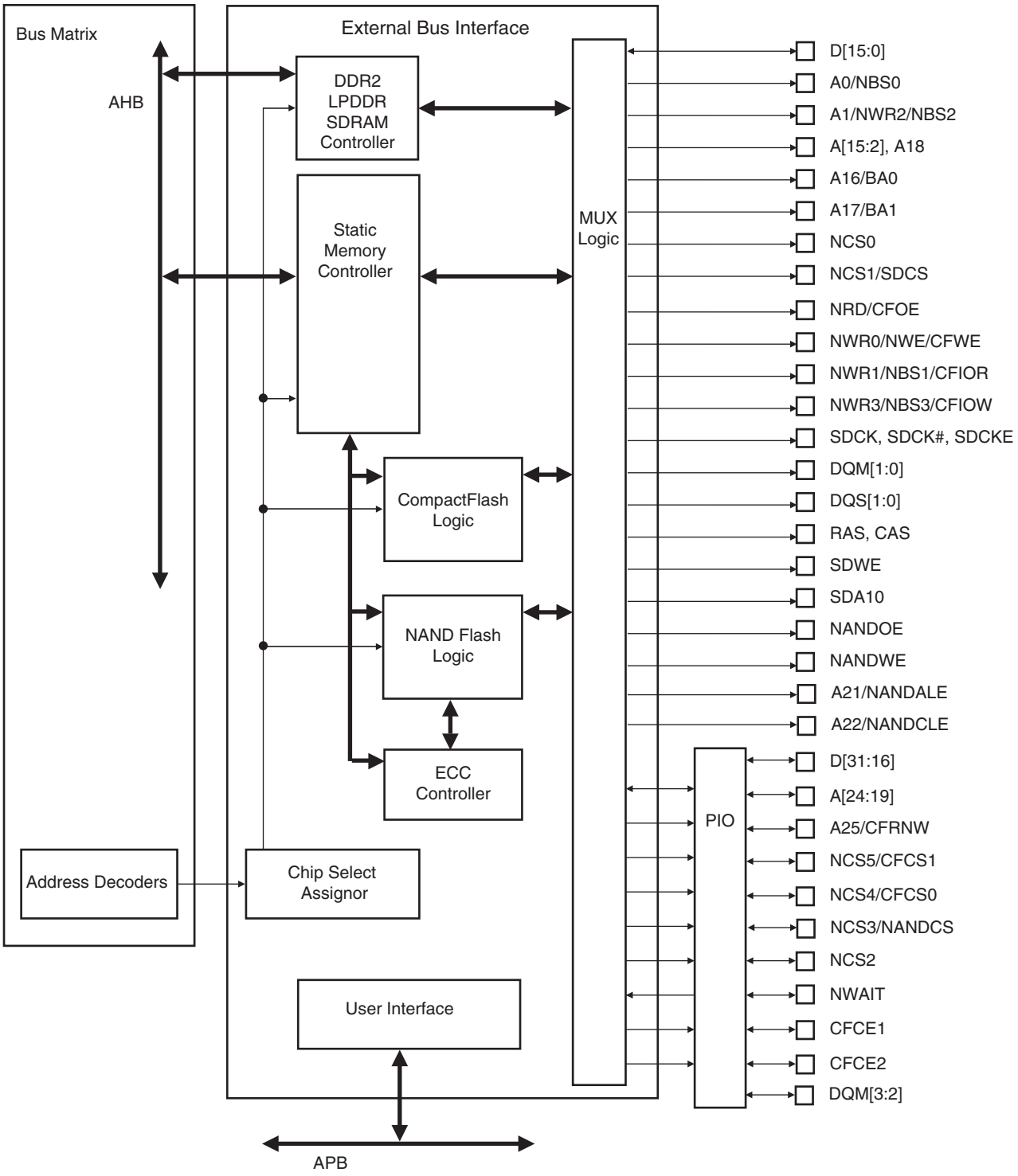

20.2.4 I/O Lines Description

Table 20-2. EBI I/O Lines Description

Name	Function	Type	Active Level
EBI			
EBI_D0 - EBI_D31	Data Bus	I/O	
EBI_A0 - EBI_A25	Address Bus	Output	
EBI_NWAIT	External Wait Signal	Input	Low
SMC			
EBI_NCS0 - EBI_NCS5	Chip Select Lines	Output	Low
EBI_NWR0 - EBI_NWR3	Write Signals	Output	Low
EBI_NRD	Read Signal	Output	Low
EBI_NWE	Write Enable	Output	Low
EBI_NBS0 - EBI_NBS3	Byte Mask Signals	Output	Low
EBI for NAND Flash Support			
EBI_NANDCS	NAND Flash Chip Select Line	Output	Low
EBI_NANDOE	NAND Flash Output Enable	Output	Low
EBI_NANDWE	NAND Flash Write Enable	Output	Low
DDR2/SDRAM Controller			
EBI_SDCK, EBI_SDCK#	DDR2/SDRAM Differential Clock	Output	
EBI_SDCKE	DDR2/SDRAM Clock Enable	Output	High
EBI_SDCS	DDR2/SDRAM Controller Chip Select Line	Output	Low
EBI_BA0 - EBI_BA1	Bank Select	Output	
EBI_SDWE	DDR2/SDRAM Write Enable	Output	Low
EBI_RAS - EBI_CAS	Row and Column Signal	Output	Low
EBI_SDA10	SDRAM Address 10 Line	Output	

The connection of some signals through the MUX logic is not direct and depends on the Memory Controller in use at the moment.

Table 20-3 on page 161 details the connections between the two Memory Controllers and the EBI pins.

Table 20-3. EBI Pins and Memory Controllers I/O Lines Connections

EBIx Pins	SDRAM I/O Lines	SMC I/O Lines
EBI_NWR1/NBS1/CFIOR	NBS1	NWR1
EBI_A0/NBS0	Not Supported	SMC_A0
EBI_A1/NBS2/NWR2	Not Supported	SMC_A1
EBI_A[11:2]	SDRAMC_A[9:0]	SMC_A[11:2]
EBI_SDA10	SDRAMC_A10	Not Supported
EBI_A12	Not Supported	SMC_A12
EBI_A[14:13]	SDRAMC_A[12:11]	SMC_A[14:13]
EBI_A[25:15]	Not Supported	SMC_A[25:15]
EBI_D[31:0]	D[31:0]	D[31:0]

20.2.5 Application Example

20.2.5.1 Hardware Interface

Table 20-4 on page 162 details the connections to be applied between the EBI pins and the external devices for each Memory Controller.

Table 20-4. EBI Pins and External Static Devices Connections

Signals: EBI_	Pins of the Interfaced Device					
	8-bit Static Device	**2 x 8-bit Static Devices**	**16-bit Static Device**	**4 x 8-bit Static Devices**	**2 x 16-bit Static Devices**	**32-bit Static Device**
Controller	**SMC**					
D0 - D7	D0 - D7	D0 - D7	D0 - D7	D0 - D7	D0 - D7	D0 - D7
D8 - D15	–	D8 - D15	D8 - D15	D8 - D15	D8 - 15	D8 - 15
D16 - D23	–	–	–	D16 - D23	D16 - D23	D16 - D23
D24 - D31	–	–	–	D24 - D31	D24 - D31	D24 - D31
A0/NBS0	A0	–	NLB	–	NLB(3)	BE0
A1/NWR2/NBS2	A1	A0	A0	WE(2)	NLB(4)	BE2
A2 - A22	A[2:22]	A[1:21]	A[1:21]	A[0:20]	A[0:20]	A[0:20]
A23 - A25(5)	A[23:25]	A[22:24]	A[22:24]	A[21:23]	A[21:23]	A[21:23]
NCS0	CS	CS	CS	CS	CS	CS
NCS1/DDRSDCS	CS	CS	CS	CS	CS	CS
NCS2	CS	CS	CS	CS	CS	CS
NCS3/NANDCS	CS	CS	CS	CS	CS	CS
NCS4/CFCS0	CS	CS	CS	CS	CS	CS
NCS5/CFCS1	CS	CS	CS	CS	CS	CS
NRD/CFOE	OE	OE	OE	OE	OE	OE
NWR0/NWE	WE	WE(1)	WE	WE(2)	WE	WE
NWR1/NBS1	–	WE(1)	NUB	WE(2)	NUB(3)	BE1
NWR3/NBS3	–	–	–	WE(2)	NUB(4)	BE3

Notes: 1. NWR1 enables upper byte writes. NWR0 enables lower byte writes.

1. NWRx enables corresponding byte x writes. (x = 0,1,2 or 3)
2. NBS0 and NBS1 enable respectively lower and upper bytes of the lower 16-bit word.
3. NBS2 and NBS3 enable respectively lower and upper bytes of the upper 16-bit word.

Table 20-5. EBI Pins and External Device Connections

Signals: EBI_	Pins of the Interfaced Device				
	DDR2/LPDDR	SDRAM	CompactFlash	CompactFlash True IDE Mode	NAND Flash
Controller	**DDRC**	**SDRAMC**	**SMC**		
D0 - D7	D0 - D7	D0 - D7	D0 - D7	D0 - D7	I/O0-I/O7
D8 - D15	D8 - D15	D8 - D15	D8 - 15	D8 - 15	I/O8-I/O15[4]
D16 - D31	–	D16 - D31	–	–	–
A0/NBS0	–	–	A0	A0	–
A1/NWR2/NBS2	–	–	A1	A1	–
DQM0-DQM3	DQM0-DQM3	DQM0-DQM3	–	–	–
DQS0-DQM1	DQS0-DQS1	–	–	–	–
A2 - A10	A[0:8]	A[0:8]	A[2:10]	A[2:10]	–
A11	A9	A9	–	–	–
SDA10	A10	A10	–	–	–
A12	–	–	–	–	–
A13 - A14	A[11:12]	A[11:12]	–	–	–
A15	A13	A13	–	–	–
A16/BA0	BA0	BA0	–	–	–
A17/BA1	BA1	BA1	–	–	–
A18 - A20	–	–	–	–	–
A21/NANDALE	–	–	–	–	ALE
A22/NANDCLE	–	–	REG	REG	CLE
A23 - A24	–	–	–	–	–
A25	–	–	CFRNW[1]	CFRNW[1]	–
NCS0	–	–	–	–	–
NCS1/DDRSDCS	DDRCS	SDCS	–	–	–
NCS2	–	–	–	–	–
NCS3/NANDCS	–	–	–	–	CE[3]
NCS4/CFCS0	–	–	CFCS0[1]	CFCS0[1]	–
NCS5/CFCS1	–	–	CFCS1[1]	CFCS1[1]	–
NANDOE	–	–	–	–	OE
NANDWE	–	–	–	–	WE
NRD/CFOE	–	–	OE	–	–
NWR0/NWE/CFWE	–	–	WE	WE	–
NWR1/NBS1/CFIOR	–	–	IOR	IOR	–
NWR3/NBS3/CFIOW	–	–	IOW	IOW	–
CFCE1	–	–	CE1	CS0	–
CFCE2	–	–	CE2	CS1	–
SDCK	CK	CLK	–	–	–
SDCK#	CK#	–	–	–	–
SDCKE	CKE	CKE	–	–	–
RAS	RAS	RAS	–	–	–
CAS	CAS	CAS	–	–	–
SDWE	WE	WE	–	–	–

Table 20-5. EBI Pins and External Device Connections (Continued)

Signals: EBI_	Pins of the Interfaced Device				
	DDR2/LPDDR	SDRAM	CompactFlash	CompactFlash True IDE Mode	NAND Flash
Controller	**DDRC**	**SDRAMC**	**SMC**		
NWAIT[5]	–	–	WAIT	WAIT	–
Pxx[2]	–	–	CD1 or CD2	CD1 or CD2	–
Pxx[2]	–	–	–	–	CE[3]
Pxx[2]	–	–	–	–	RDY

Notes:
1. Not directly connected to the CompactFlash slot. Permits the control of the bidirectional buffer between the EBI data bus and the CompactFlash slot.
2. Any PIO line.
3. CE connection depends on the NAND Flash.
   For standard NAND Flash devices, it must be connected to any free PIO line.
   For "CE don't care" NAND Flash devices, it can be either connected to NCS3/NANDCS or to any free PIO line.
4. I/O8 - !/O15 pins used only for 16-bit NANDFlash device.
5. EBI_NWAIT signal is multiplexed with PC15.

20.2.5.2 Connection Examples

Figure 20-4 shows an example of connections between the EBI and external devices.

Figure 20-4. EBI Connections to Memory Devices

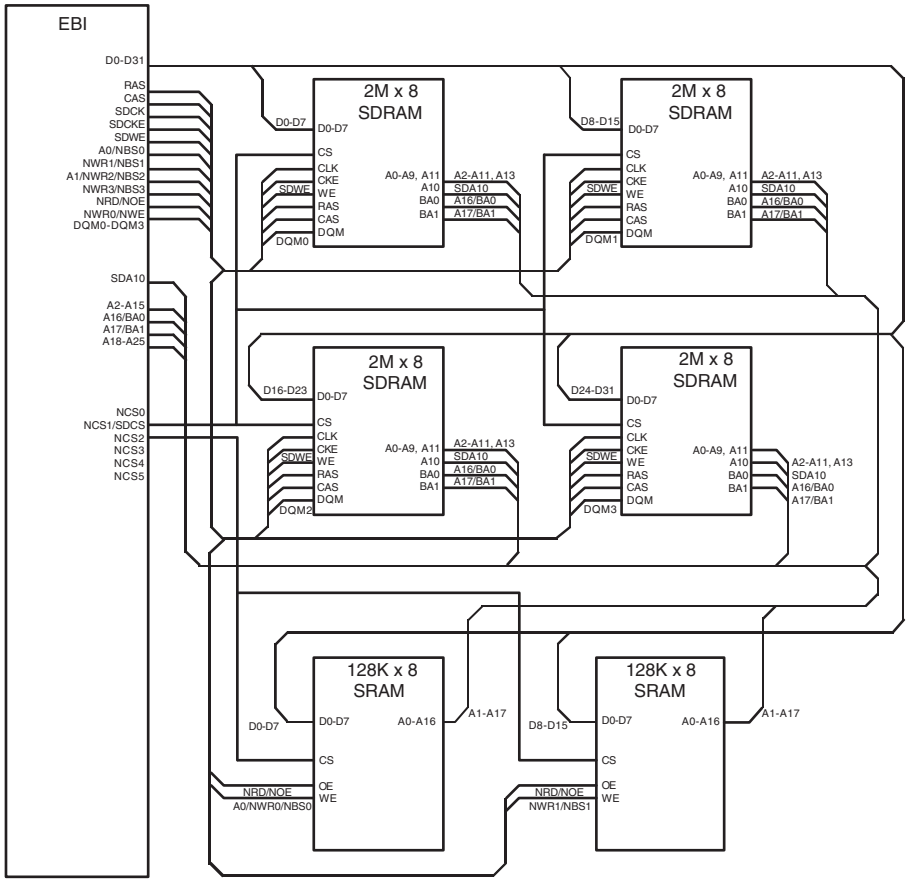

20.2.6 Product Dependencies

20.2.6.1 I/O Lines

The pins used for interfacing the External Bus Interface may be multiplexed with the PIO lines. The programmer must first program the PIO controller to assign the External Bus Interface pins to their peripheral function. If I/O lines of the External Bus Interface are not used by the application, they can be used for other purposes by the PIO Controller.

20.2.7 Functional Description

The EBI transfers data between the internal AHB Bus (handled by the Bus Matrix) and the external memories or peripheral devices. It controls the waveforms and the parameters of the external address, data and control buses and is composed of the following elements:

- The Static Memory Controller (SMC)
- The DDR2/SDRAM Controller (DDR2SDRAMC)
- The ECC Controller (ECC)
- A chip select assignment feature that assigns an AHB address space to the external devices
- A multiplex controller circuit that shares the pins between the different Memory Controllers
- Programmable CompactFlash support logic
- Programmable NAND Flash support logic

20.2.7.1 Bus Multiplexing

The EBI offers a complete set of control signals that share the 32-bit data lines, the address lines of up to 26 bits and the control signals through a multiplex logic operating in function of the memory area requests.

Multiplexing is specifically organized in order to guarantee the maintenance of the address and output control lines at a stable state while no external access is being performed. Multiplexing is also designed to respect the data float times defined in the Memory Controllers. Furthermore, refresh cycles of the DDR2 and SDRAM are executed independently by the DDR2SDRAM Controller without delaying the other external Memory Controller accesses.

20.2.7.2 Pull-up Control

The EBI_CSA registers in the Chip Configuration User Interface permit enabling of on-chip pull-up resistors on the data bus lines not multiplexed with the PIO Controller lines. The pull-up resistors are enabled after reset. Setting the EBIx_DBPUC bit disables the pull-up resistors on the D0 to D15 lines. Enabling the pull-up resistor on the D16-D31 lines can be performed by programming the appropriate PIO controller.

20.2.7.3 Static Memory Controller

For information on the Static Memory Controller, refer to the Static Memory Controller section.

20.2.7.4 DDR2SDRAM Controller

For information on the DDR2SDRAM Controller, refer to the DDR2SDRAMC section.

20.2.7.5 ECC Controller

For information on the ECC Controller, refer to the ECC section.

20.2.7.6 CompactFlash Support

The External Bus Interface 0 integrates circuitry that interfaces to CompactFlash devices.

The CompactFlash logic is driven by the Static Memory Controller (SMC) on the NCS4 and/or NCS5 address space. Programming the EBI_CS4A and/or EBI_CS5A bit of the EBI_CSA Register in the Chip Configuration User Interface to the appropriate value enables this logic. (For details on this register, refer to the Chip Configuration

User Interface in the Bus Matrix Section.) Access to an external CompactFlash device is then made by accessing the address space reserved to NCS4 and/or NCS5 (i.e., between 0x5000 0000 and 0x5FFF FFFF for NCS4 and between 0x6000 0000 and 0x6FFF FFFF for NCS5).

All CompactFlash modes (Attribute Memory, Common Memory, I/O and True IDE) are supported but the signals _IOIS16 (I/O and True IDE modes) and _ATA SEL (True IDE mode) are not handled.

I/O Mode, Common Memory Mode, Attribute Memory Mode and True IDE Mode

Within the NCS4 and/or NCS5 address space, the current transfer address is used to distinguish I/O mode, common memory mode, attribute memory mode and True IDE mode.

The different modes are accessed through a specific memory mapping as illustrated on Figure 20-5. A[23:21] bits of the transfer address are used to select the desired mode as described in Table 20-6 on page 166.

Figure 20-5. CompactFlash Memory Mapping

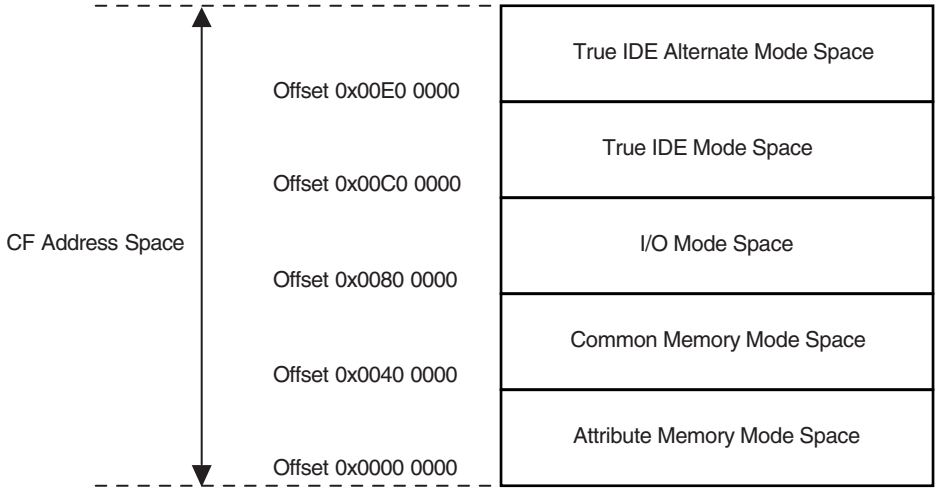

Note: The A22 pin is used to drive the REG signal of the CompactFlash Device (except in True IDE mode).

Table 20-6. CompactFlash Mode Selection

A[23:21]	Mode Base Address
000	Attribute Memory
010	Common Memory
100	I/O Mode
110	True IDE Mode
111	Alternate True IDE Mode

CFCE1 and CFCE2 Signals

To cover all types of access, the SMC must be alternatively set to drive 8-bit data bus or 16-bit data bus. The odd byte access on the D[7:0] bus is only possible when the SMC is configured to drive 8-bit memory devices on the corresponding NCS pin (NCS4 or NCS5). The Chip Select Register (DBW field in the corresponding Chip Select Register) of the NCS4 and/or NCS5 address space must be set as shown in Table 20-7 to enable the required access type.

NBS1 and NBS0 are the byte selection signals from SMC and are available when the SMC is set in Byte Select mode on the corresponding Chip Select.

The CFCE1 and CFCE2 waveforms are identical to the corresponding NCSx waveform. For details on these waveforms and timings, refer to the Static Memory Controller section.

Table 20-7. CFCE1 and CFCE2 Truth Table

Mode	CFCE2	CFCE1	DBW	Comment	SMC Access Mode
Attribute Memory	NBS1	NBS0	16 bits	Access to Even Byte on D[7:0]	Byte Select
Common Memory	NBS1	NBS0	16bits	Access to Even Byte on D[7:0] Access to Odd Byte on D[15:8]	Byte Select
	1	0	8 bits	Access to Odd Byte on D[7:0]	
I/O Mode	NBS1	NBS0	16 bits	Access to Even Byte on D[7:0] Access to Odd Byte on D[15:8]	Byte Select
	1	0	8 bits	Access to Odd Byte on D[7:0]	
True IDE Mode					
Task File	1	0	8 bits	Access to Even Byte on D[7:0] Access to Odd Byte on D[7:0]	
Data Register	1	0	16 bits	Access to Even Byte on D[7:0] Access to Odd Byte on D[15:8]	Byte Select
Alternate True IDE Mode					
Control Register Alternate Status Read	0	1	Don't Care	Access to Even Byte on D[7:0]	Don't Care
Drive Address	0	1	8 bits	Access to Odd Byte on D[7:0]	
Standby Mode or Address Space is not assigned to CF	1	1	–	–	–

Read/Write Signals

In I/O mode and True IDE mode, the CompactFlash logic drives the read and write command signals of the SMC on CFIOR and CFIOW signals, while the CFOE and CFWE signals are deactivated. Likewise, in common memory mode and attribute memory mode, the SMC signals are driven on the CFOE and CFWE signals, while the CFIOR and CFIOW are deactivated. Figure 20-6 on page 168 demonstrates a schematic representation of this logic.

Attribute memory mode, common memory mode and I/O mode are supported by setting the address setup and hold time on the NCS4 (and/or NCS5) chip select to the appropriate values. For details on these signal waveforms, please refer to the section: Setup and Hold Cycles of the Static Memory Controller section.

Figure 20-6. CompactFlash Read/Write Control Signals

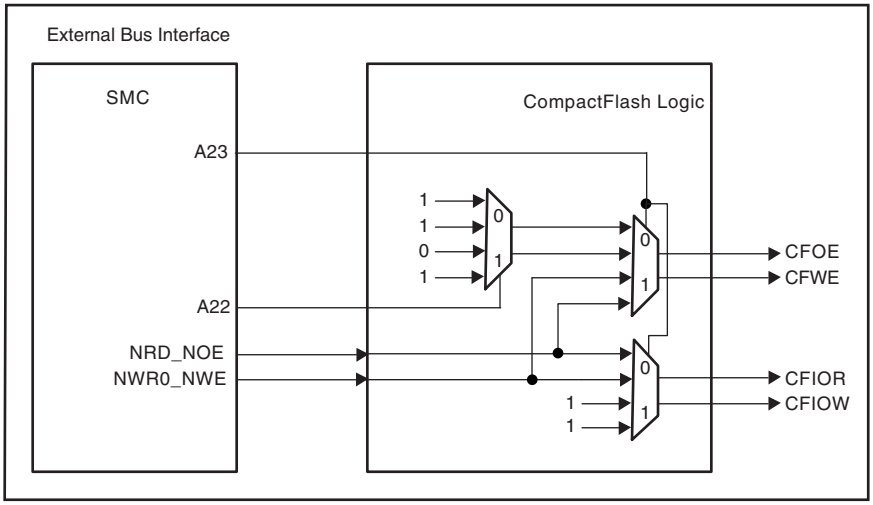

Table 20-8. CompactFlash Mode Selection

Mode Base Address	CFOE	CFWE	CFIOR	CFIOW
Attribute Memory Common Memory	NRD	NWR0_NWE	1	1
I/O Mode	1	1	NRD	NWR0_NWE
True IDE Mode	0	1	NRD	NWR0_NWE

Multiplexing of CompactFlash Signals on EBI Pins

Table 20-9 on page 168 and Table 20-10 on page 169 illustrate the multiplexing of the CompactFlash logic signals with other EBI signals on the EBI pins. The EBI pins in Table 20-9 are strictly dedicated to the CompactFlash interface as soon as the EBI_CS4A and/or EBI_CS5A field of the EBI_CSA Register in the Chip Configuration User Interface is set. These pins must not be used to drive any other memory devices.

The EBI pins in Table 20-10 on page 169 remain shared between all memory areas when the corresponding CompactFlash interface is enabled (EBI_CS4A = 1 and/or EBI_CS5A = 1)

.

Table 20-9. Dedicated CompactFlash Interface Multiplexing

Pins	CompactFlash Signals		EBI Signals	
	CS4A = 1	**CS5A = 1**	**CS4A = 0**	**CS5A = 0**
NCS4/CFCS0	CFCS0		NCS4	
NCS5/CFCS1		CFCS1		NCS5

Table 20-10. Shared CompactFlash Interface Multiplexing

Pins	Access to CompactFlash Device CompactFlash Signals	Access to Other EBI Devices EBI Signals
NRD/CFOE	CFOE	NRD
NWR0/NWE/CFWE	CFWE	NWR0/NWE
NWR1/NBS1/CFIOR	CFIOR	NWR1/NBS1
NWR3/NBS3/CFIOW	CFIOW	NWR3/NBS3
A25/CFRNW	CFRNW	A25

Application Example

Figure 20-7 on page 169 illustrates an example of a CompactFlash application. CFCS0 and CFRNW signals are not directly connected to the CompactFlash slot 0, but do control the direction and the output enable of the buffers between the EBI and the CompactFlash Device. The timing of the CFCS0 signal is identical to the NCS4 signal. Moreover, the CFRNW signal remains valid throughout the transfer, as does the address bus. The CompactFlash _WAIT signal is connected to the NWAIT input of the Static Memory Controller. For details on these waveforms and timings, refer to the Static Memory Controller Section.

Figure 20-7. CompactFlash Application Example

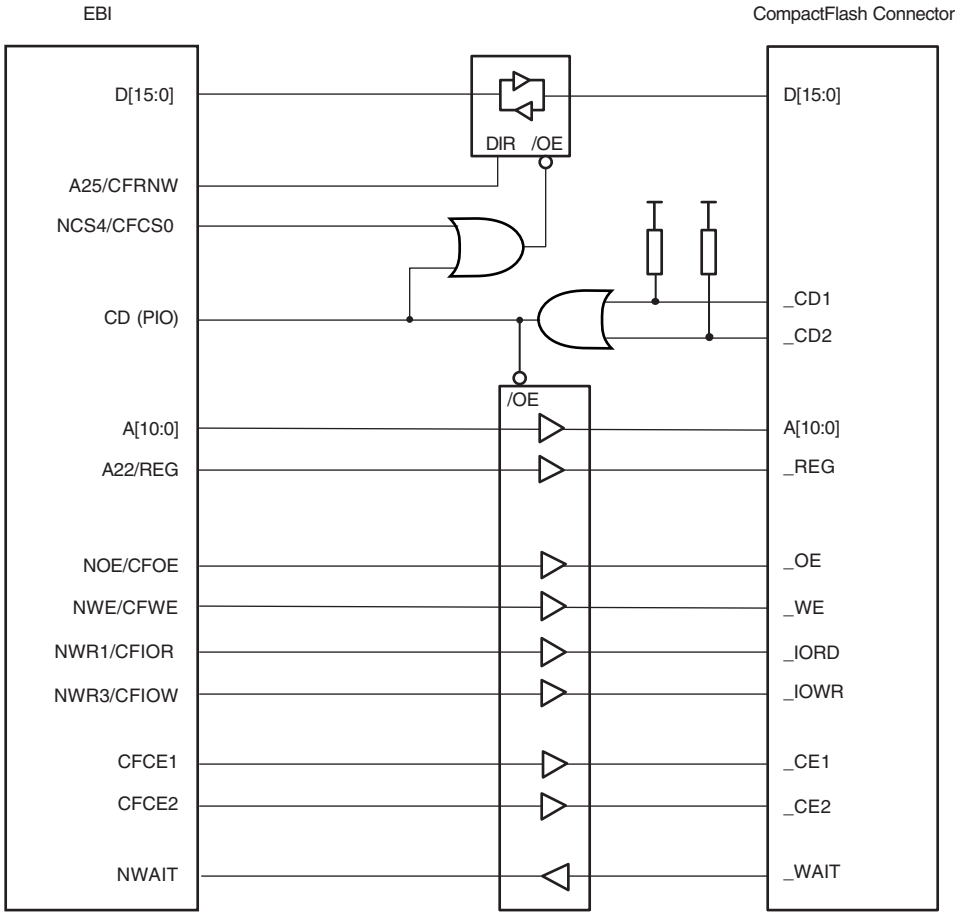

20.2.7.7 NAND Flash Support

External Bus Interfaces integrate circuitry that interfaces to NAND Flash devices.

External Bus Interface

The NAND Flash logic is driven by the Static Memory Controller on the NCS3 address space. Programming the EBI_CS3A field in the EBI_CSA Register in the Chip Configuration User Interface to the appropriate value enables the NAND Flash logic. For details on this register, refer to the Bus Matrix Section. Access to an external NAND Flash device is then made by accessing the address space reserved to NCS3 (i.e., between 0x4000 0000 and 0x4FFF FFFF).

The NAND Flash Logic drives the read and write command signals of the SMC on the NANDOE and NANDWE signals when the NCS3 signal is active. NANDOE and NANDWE are invalidated as soon as the transfer address fails to lie in the NCS3 address space. See Figure 20-8 on page 170 for more information. For details on these waveforms, refer to the Static Memory Controller section.

NAND Flash Signals

The address latch enable and command latch enable signals on the NAND Flash device are driven by address bits A22 and A21 of the EBI address bus. The command, address or data words on the data bus of the NAND Flash device are distinguished by using their address within the NCSx address space. The chip enable (CE) signal of the device and the ready/busy (R/B) signals are connected to PIO lines. The CE signal then remains asserted even when NCSx is not selected, preventing the device from returning to standby mode.

Figure 20-8. NAND Flash Application Example

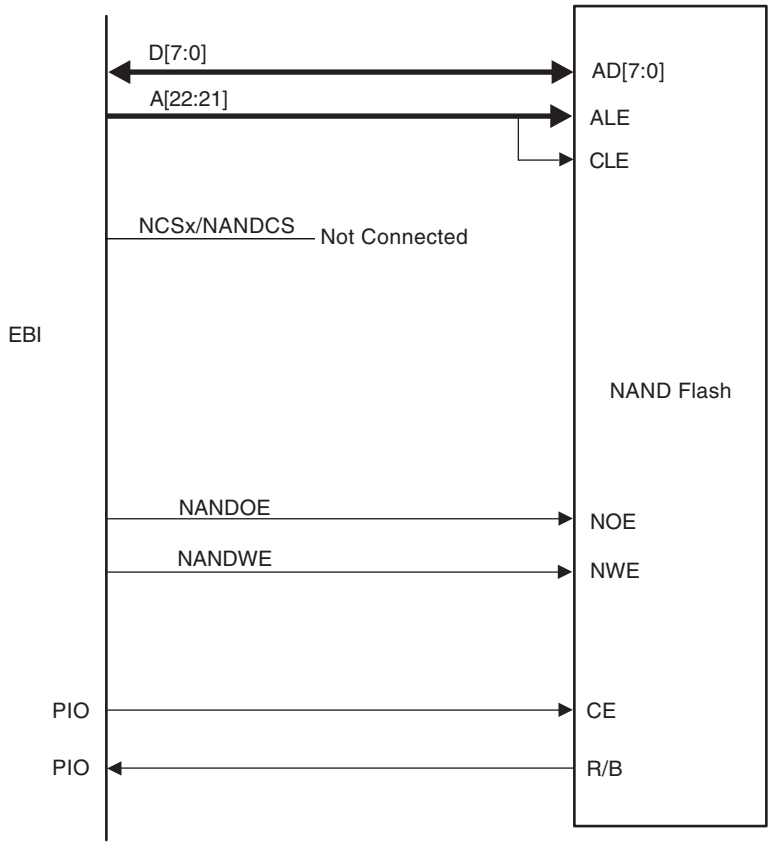

20.2.8 Implementation Examples

The following hardware configurations are given for illustration only. The user should refer to the memory manufacturer web site to check current device availability.

20.2.8.1 2x8-bit DDR2 on EBI

Hardware Configuration

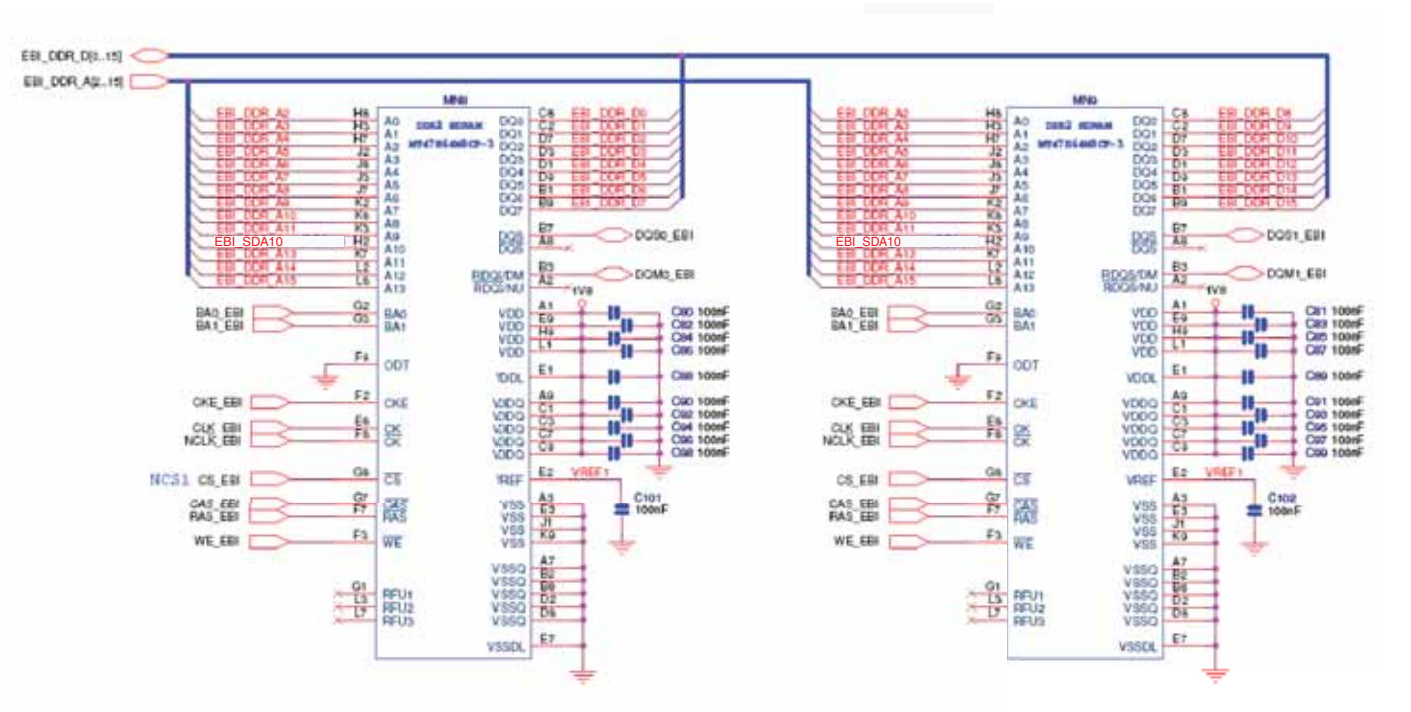

Software Configuration

- Assign EBI_CS1 to the DDR2 controller by setting the EBI_CS1A bit in the EBI Chip Select Register located in the bus matrix memory space.
- Initialize the DDR2 Controller depending on the DDR2 device and system bus frequency.

The DDR2 initialization sequence is described in the sub-section “DDR2 Device Initialization” of the DDRSDRC section.

20.2.8.2 16-bit LPDDR on EBI

Hardware Configuration

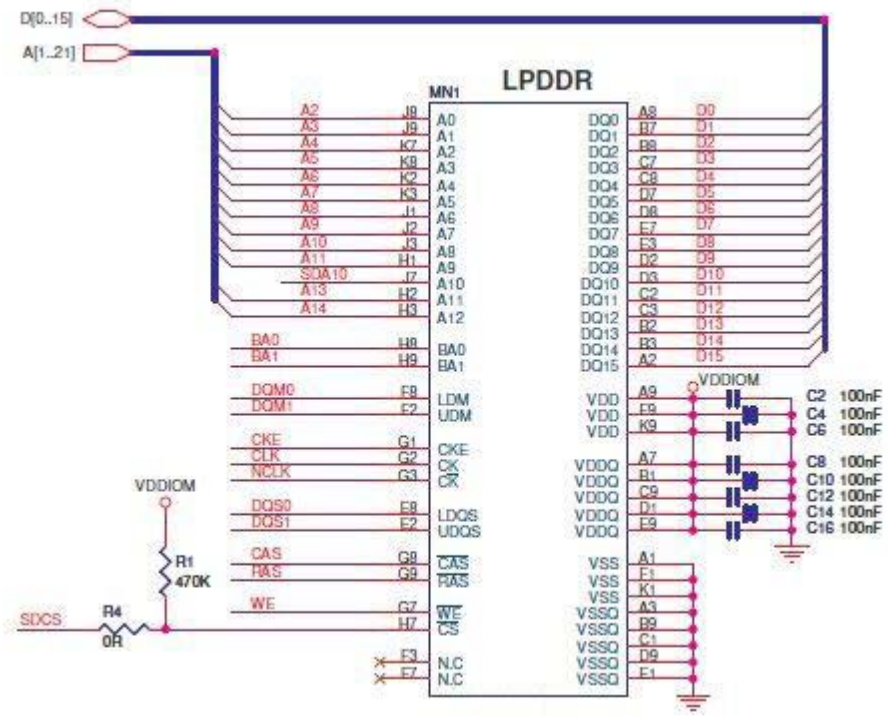

Software Configuration

The following configuration has to be performed:

- Assign EBI_CS1 to the DDR2 controller by setting the bit EBI_CS1A in the EBI Chip Select Register located in the bus matrix memory space.
- Initialize the DDR2 Controller depending on the LP-DDR device and system bus frequency.

The LP-DDR initialization sequence is described in the section “Low-power DDR1-SDRAM Initialization” in “DDR/SDR SDRAM Controller (DDRSDRC)”.

20.2.8.3 16-bit SDRAM

Hardware Configuration

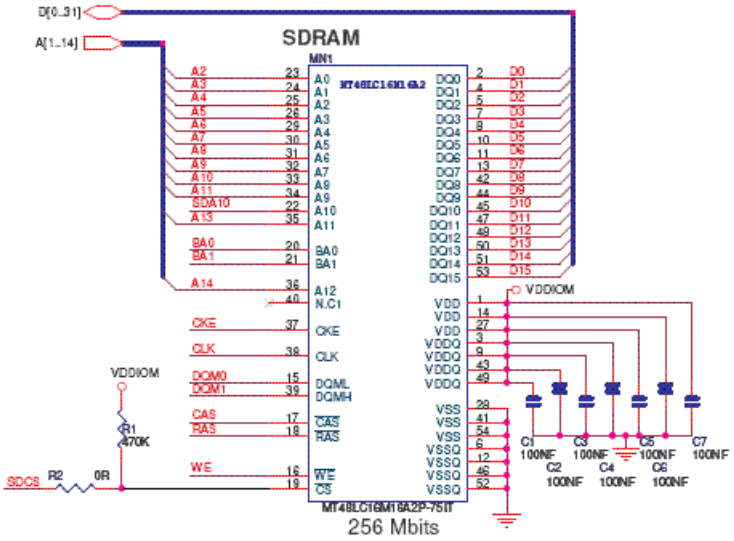

Software Configuration

The following configuration has to be performed:

- Assign the EBI CS1 to the SDRAM controller by setting the bit EBI_CS1A in the EBI Chip Select Assignment Register located in the bus matrix memory space.
- Initialize the SDRAM Controller depending on the SDRAM device and system bus frequency.

The Data Bus Width is to be programmed to 16 bits.

The SDRAM initialization sequence is described in the section “SDRAM Device Initialization” in “SDRAM Controller (SDRAMC)”.

20.2.8.4 2x16-bit SDRAM

Hardware Configuration

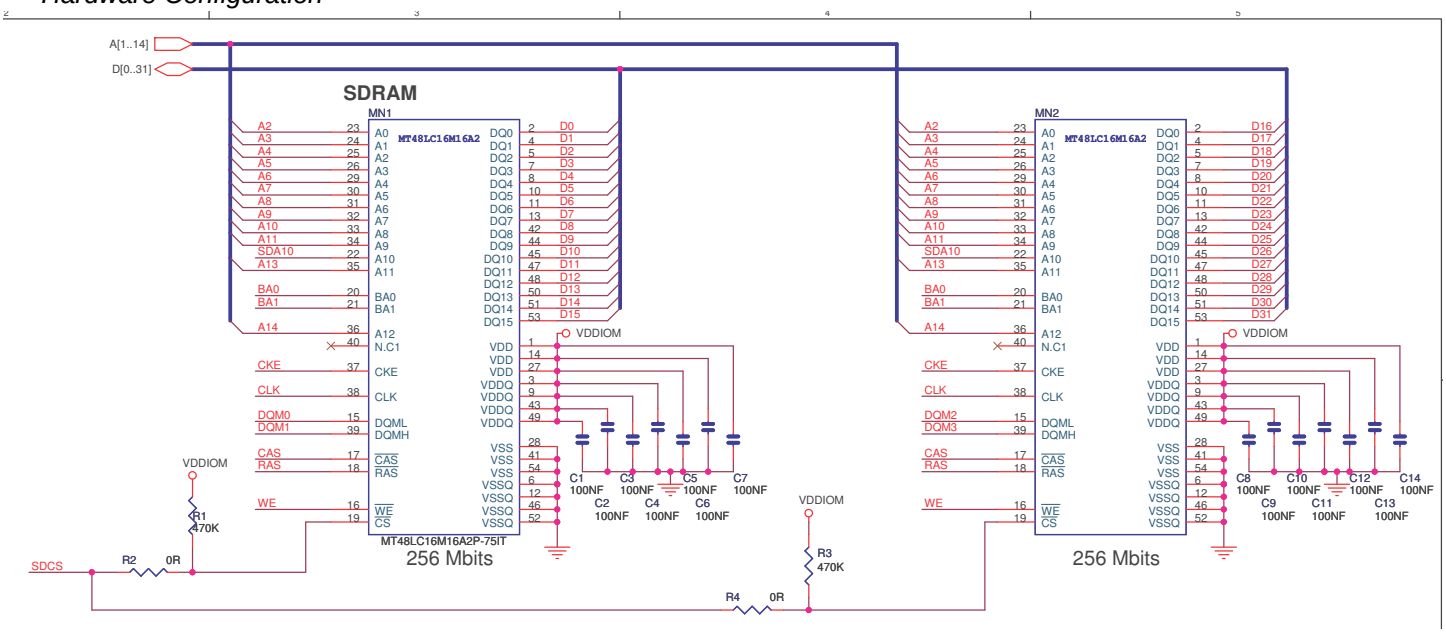

Software Configuration

The following configuration has to be performed:

- Assign the EBI CS1 to the SDRAM controller by setting the bit EBI_CS1A in the EBI Chip Select Assignment Register located in the bus matrix memory space.
- Initialize the SDRAM Controller depending on the SDRAM device and system bus frequency.

The Data Bus Width is to be programmed to 32 bits. The data lines D[16..31] are multiplexed with PIO lines and thus the dedicated PIOs must be programmed in peripheral mode in the PIO controller.

The SDRAM initialization sequence is described in the section “SDRAM Device Initialization” in “SDRAM Controller (SDRAMC)”.

20.2.8.5 8-bit NAND Flash

Hardware Configuration

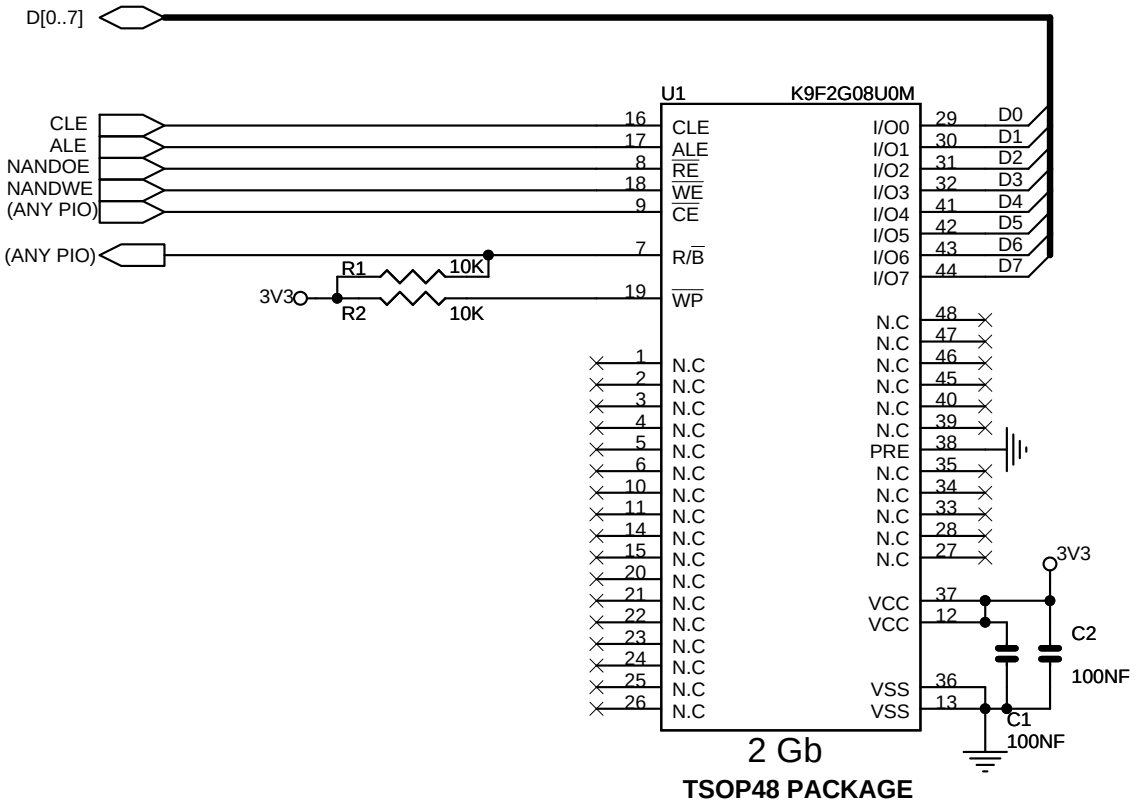

Software Configuration

The following configuration has to be performed:

- Assign the EBI CS3 to the NAND Flash by setting the bit EBI_CS3A in the EBI Chip Select Assignment Register located in the bus matrix memory space
- Reserve A21 / A22 for ALE / CLE functions. Address and Command Latches are controlled respectively by setting to 1 the address bit A21 and A22 during accesses.
- Configure a PIO line as an input to manage the Ready/Busy signal.
- Configure Static Memory Controller CS3 Setup, Pulse, Cycle and Mode accordingly to NAND Flash timings, the data bus width and the system bus frequency.

20.2.8.6 16-bit NAND Flash

Hardware Configuration

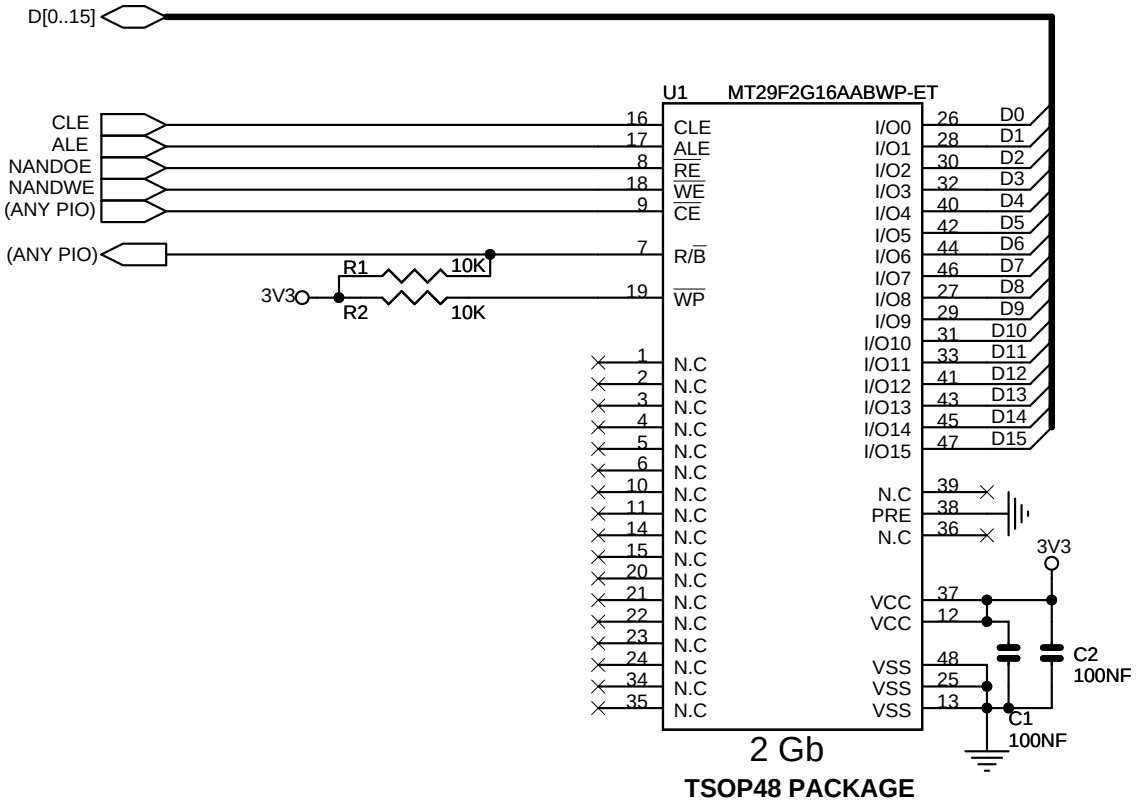

Software Configuration

The software configuration is the same as for an 8-bit NAND Flash except for the data bus width programmed in the mode register of the Static Memory Controller.

20.2.8.7 NOR Flash on NCS0

Hardware Configuration

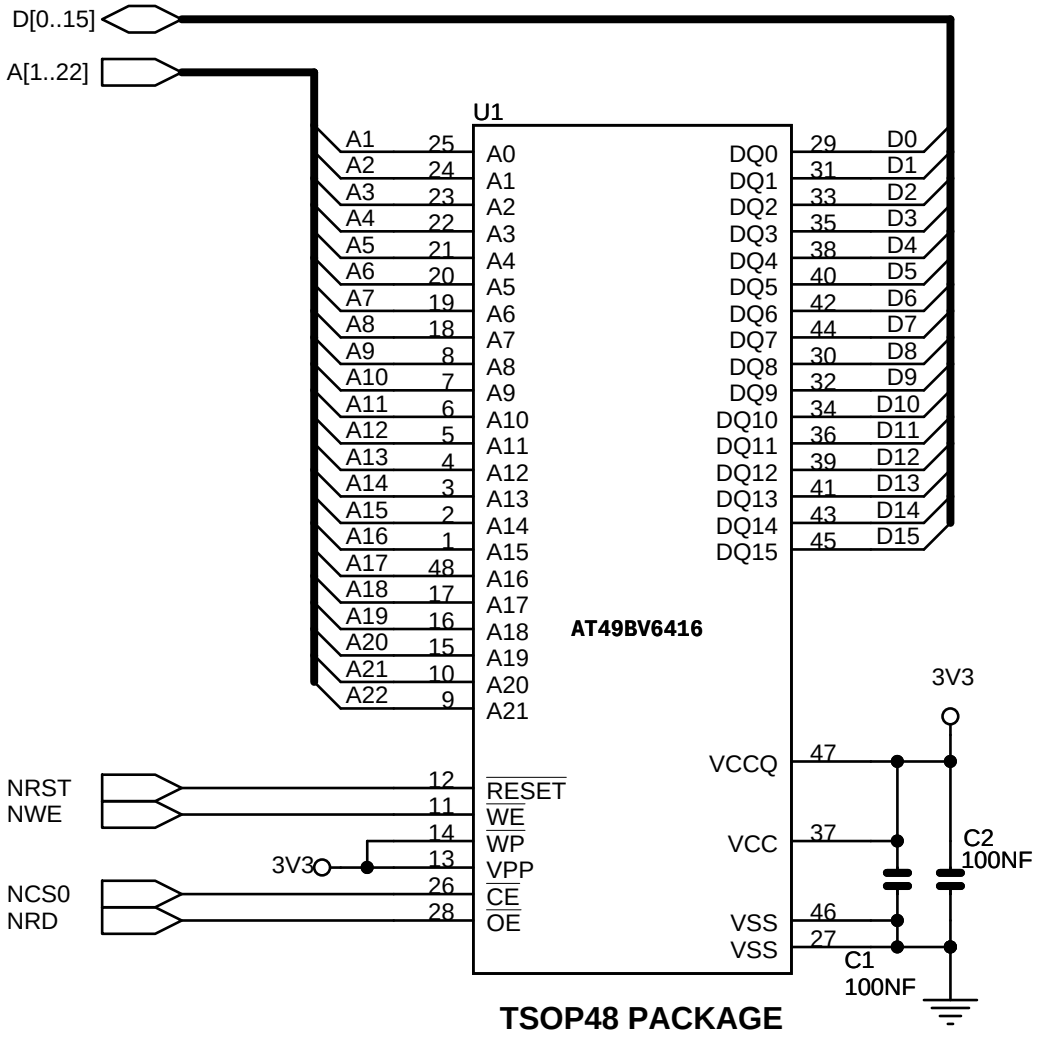

Software Configuration

The default configuration for the Static Memory Controller, byte select mode, 16-bit data bus, Read/Write controlled by Chip Select, allows boot on 16-bit non-volatile memory at slow clock.

For another configuration, configure the Static Memory Controller CS0 Setup, Pulse, Cycle and Mode depending on Flash timings and system bus frequency.

20.2.8.8 CompactFlash Hardware Configuration

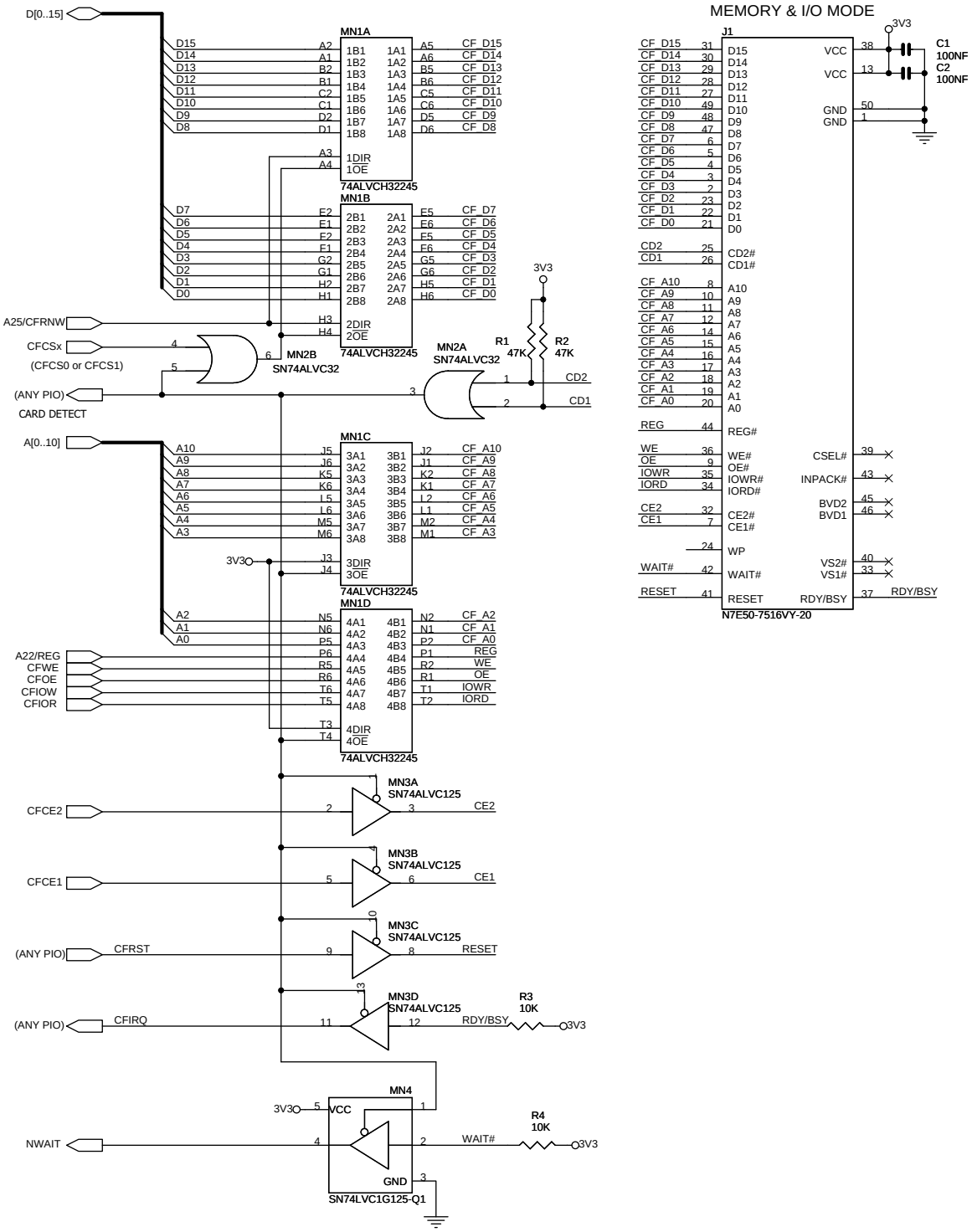

Software Configuration

The following configuration has to be performed:

- Assign the EBI CS4 and/or EBI_CS5 to the CompactFlash Slot 0 and/or Slot 1 by setting the bit EBI_CS4A and/or EBI_CS5A in the EBI Chip Select Assignment Register located in the bus matrix memory space.
- The address line A23 is to select I/O (A23=1) or Memory mode (A23=0) and the address line A22 for REG function.
- A22, A23, CFRNW, CFS0, CFCS1, CFCE1 and CFCE2 signals are multiplexed with PIO lines and thus the dedicated PIOs must be programmed in peripheral mode in the PIO controller.
- Configure a PIO line as an output for CFRST and two others as an input for CFIRQ and CARD DETECT functions respectively.
- Configure SMC CS4 and/or SMC_CS5 (for Slot 0 or 1) Setup, Pulse, Cycle and Mode accordingly to CompactFlash timings and system bus frequency.

20.2.8.9 CompactFlash True IDE Hardware Configuration

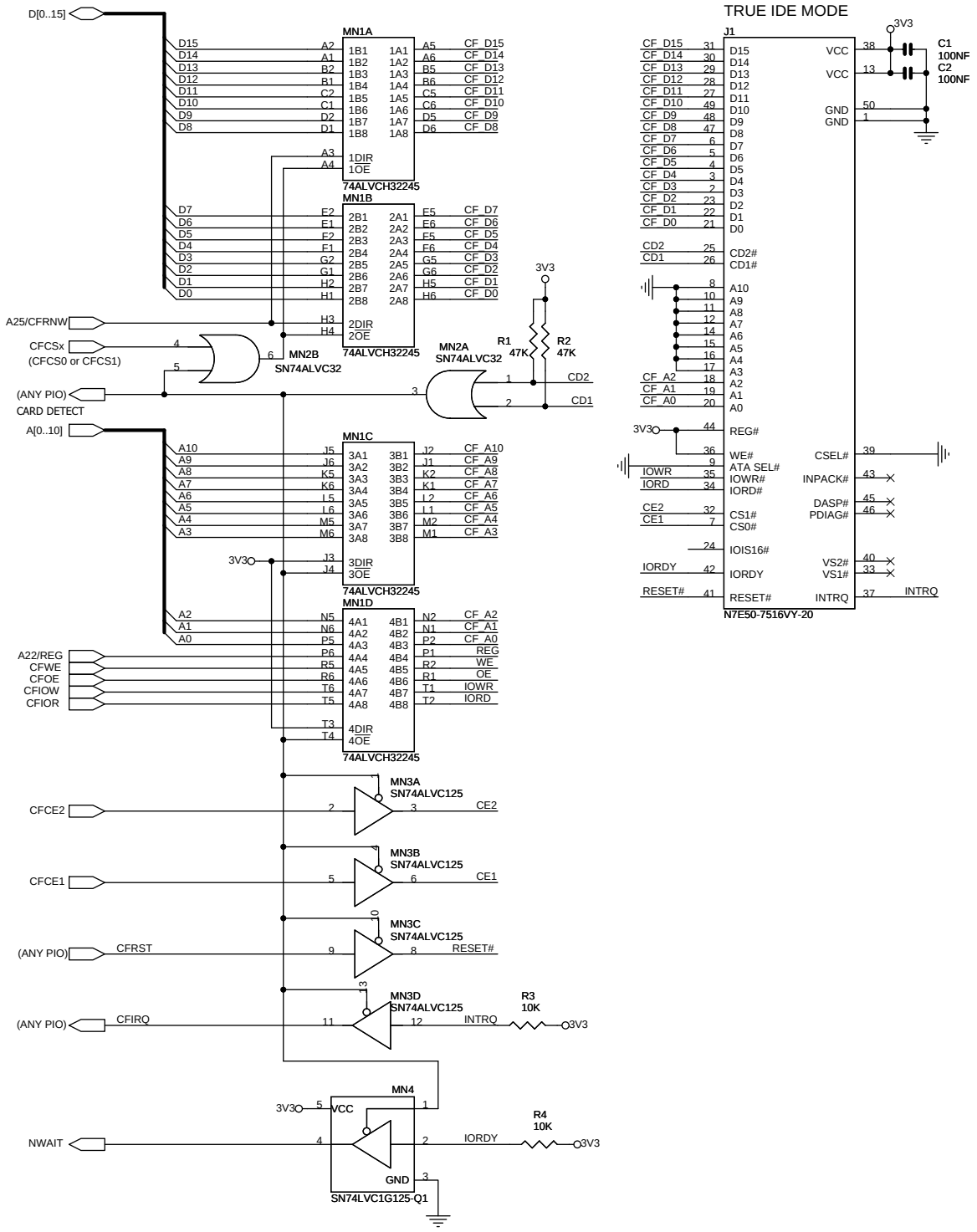

Software Configuration

The following configuration has to be performed:

- Assign the EBI CS4 and/or EBI_CS5 to the CompactFlash Slot 0 and/or Slot 1 by setting the bit EBI_CS4A and/or EBI_CS5A in the EBI Chip Select Assignment Register located in the bus matrix memory space.
- The address line A21 is to select Alternate True IDE (A21=1) or True IDE (A21=0) modes.
- A21, CFRNW, CFS0, CFCS1, CFCE1 and CFCE2 signals are multiplexed with PIO lines and thus the dedicated PIOs must be programmed in peripheral mode in the PIO controller.
- Configure a PIO line as an output for CFRST and two others as an input for CFIRQ and CARD DETECT functions respectively.
- Configure SMC CS4 and/or SMC_CS5 (for Slot 0 or 1) Setup, Pulse, Cycle and Mode accordingly to CompactFlash timings and system bus frequency.

20.2.9 Programmable I/O Lines Power Supplies and Drive Levels

The power supply pin VDDIOM1 accepts two voltage ranges. This allows the device to reach its maximum speed either out of 1.8V or 3.3V external memories.

The maximum speed is 133 MHz on the SDCK pin and #SDCK signals loaded with 10 pF. The load on data/address and control signals are 30 pF for power supply at 1.8V and 50 pF for power supply at 3.3V. The data lines frequency reaches 133 MHz in DDR2 mode. The other signals (control and address) do not go over 66 MHz.

The EBI I/Os accept two drive levels, HIGH and LOW. This allows to avoid overshoots and give the best performance according to the bus load and external memories. Refer to the EBI Chip Select Assignment Register for more details.

The voltage ranges and the drive level are determined by programming EBI_DRIVE field in the Chip Configuration registers located in the Matrix User Interface.

At reset the selected default drive level is High.

At reset, the selected voltage defaults to 3.3V typical and power supply pins can accept either 1.8V or 3.3V. The user must make sure to program the EBI voltage range before getting the device out of its Slow Clock Mode. The user must make sure to program the EBI voltage range before getting the device out of its Slow Clock Mode.

21. Static Memory Controller (SMC)

21.1 Description

The Static Memory Controller (SMC) generates the signals that control the access to the external memory devices or peripheral devices. It has 6 Chip Selects and a 26-bit address bus. The 32-bit data bus can be configured to interface with 8-, 16-, or 32-bit external devices. Separate read and write control signals allow for direct memory and peripheral interfacing. Read and write signal waveforms are fully parametrizable.

The SMC can manage wait requests from external devices to extend the current access. The SMC is provided with an automatic slow clock mode. In slow clock mode, it switches from user-programmed waveforms to slow-rate specific waveforms on read and write signals. The SMC supports asynchronous burst read in page mode access for page size up to 32 bytes.

21.2 I/O Lines Description

Table 21-1. I/O Line Description

Name	Description	Type	Active Level
NCS[7:0]	Static Memory Controller Chip Select Lines	Output	Low
NRD	Read Signal	Output	Low
NWR0/NWE	Write 0/Write Enable Signal	Output	Low
A0/NBS0	Address Bit 0/Byte 0 Select Signal	Output	Low
NWR1/NBS1	Write 1/Byte 1 Select Signal	Output	Low
A1/NWR2/NBS2	Address Bit 1/Write 2/Byte 2 Select Signal	Output	Low
NWR3/NBS3	Write 3/Byte 3 Select Signal	Output	Low
A[25:2]	Address Bus	Output	
D[31:0]	Data Bus	I/O	
NWAIT	External Wait Signal	Input	Low

21.3 Multiplexed Signals

Table 21-2. Static Memory Controller (SMC) Multiplexed Signals

Multiplexed Signals			Related Function
NWR0	NWE		Byte-write or byte-select access, see “Byte Write or Byte Select Access” on page 185
A0	NBS0		8-bit or 16-/32-bit data bus, see “Data Bus Width” on page 185
NWR1	NBS1		Byte-write or byte-select access see “Byte Write or Byte Select Access” on page 185
A1	NWR2	NBS2	8-/16-bit or 32-bit data bus, see “Data Bus Width” on page 185. Byte-write or byte-select access, see “Byte Write or Byte Select Access” on page 185
NWR3	NBS3		Byte-write or byte-select access see “Byte Write or Byte Select Access” on page 185

21.4 Application Example

21.4.1 Hardware Interface

Figure 21-1. SMC Connections to Static Memory Devices

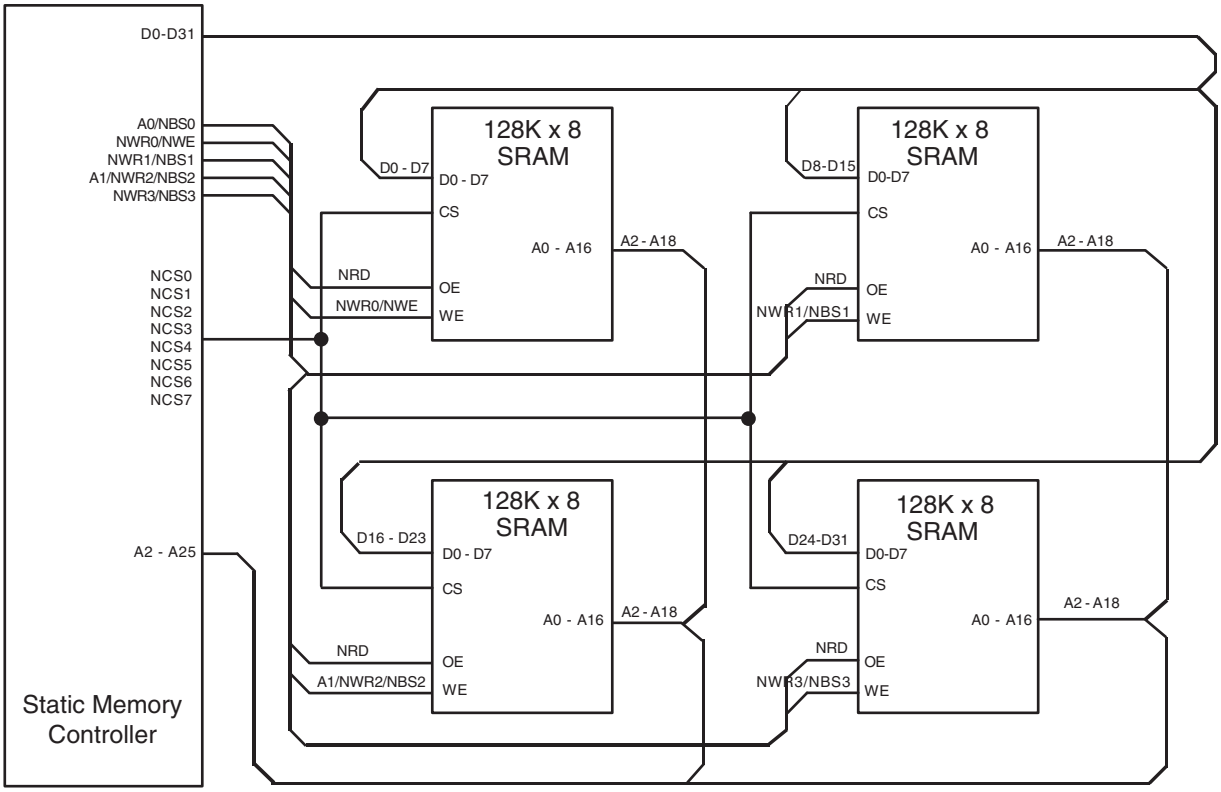

21.5 Product Dependencies

21.5.1 I/O Lines

The pins used for interfacing the Static Memory Controller may be multiplexed with the PIO lines. The programmer must first program the PIO controller to assign the Static Memory Controller pins to their peripheral function. If I/O Lines of the SMC are not used by the application, they can be used for other purposes by the PIO Controller.

21.6 External Memory Mapping

The SMC provides up to 26 address lines, A[25:0]. This allows each chip select line to address up to 64 Mbytes of memory.

If the physical memory device connected on one chip select is smaller than 64 Mbytes, it wraps around and appears to be repeated within this space. The SMC correctly handles any valid access to the memory device within the page (see Figure 21-2).

A[25:0] is only significant for 8-bit memory, A[25:1] is used for 16-bit memory, A[25:2] is used for 32-bit memory.

Figure 21-2. Memory Connections for Eight External Devices

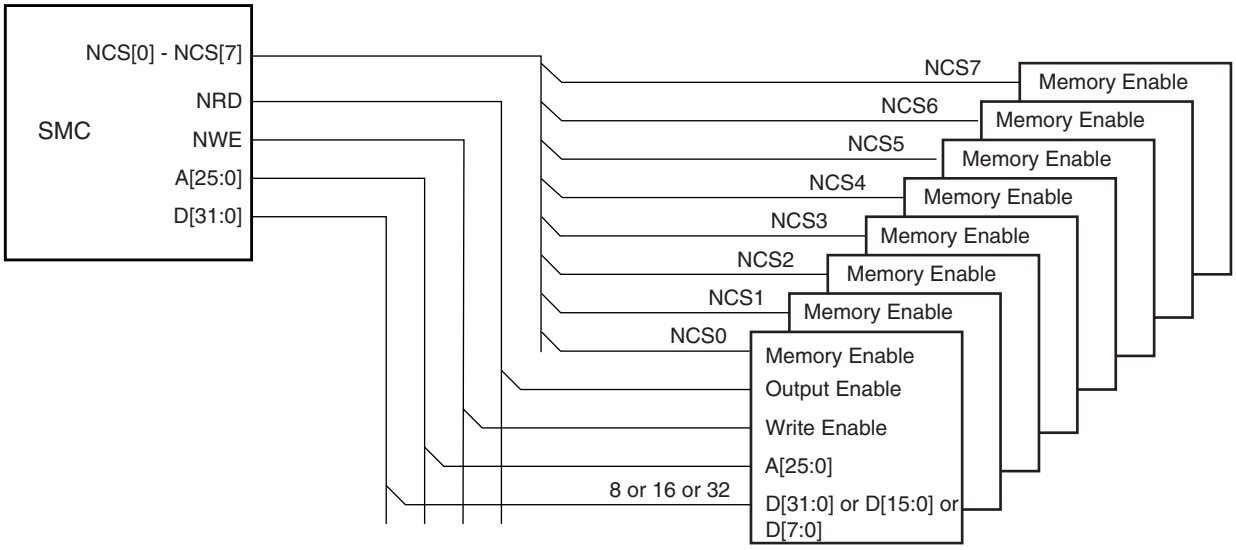

21.7 Connection to External Devices

21.7.1 Data Bus Width

A data bus width of 8, 16, or 32 bits can be selected for each chip select. This option is controlled by the field DBW in SMC_MODE (Mode Register) for the corresponding chip select.

Figure 21-3 shows how to connect a 512K x 8-bit memory on NCS2. Figure 21-4 shows how to connect a 512K x 16-bit memory on NCS2. Figure 21-5 shows two 16-bit memories connected as a single 32-bit memory

21.7.2 Byte Write or Byte Select Access

Each chip select with a 16-bit or 32-bit data bus can operate with one of two different types of write access: byte write or byte select access. This is controlled by the BAT field of the SMC_MODE register for the corresponding chip select.

Figure 21-3. Memory Connection for an 8-bit Data Bus

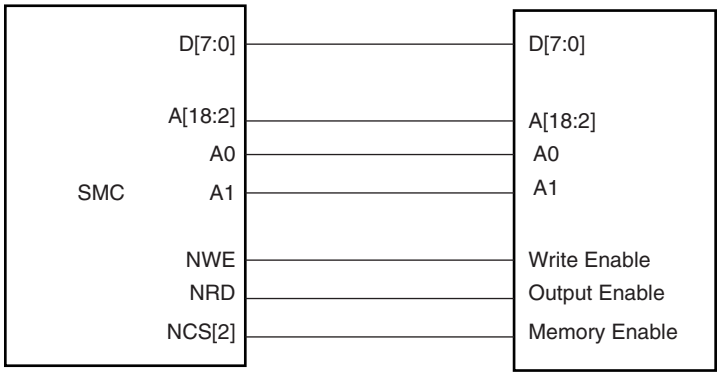

Figure 21-4. Memory Connection for a 16-bit Data Bus

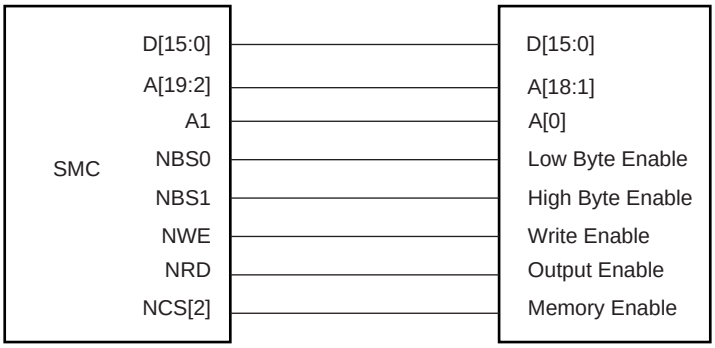

Figure 21-5. Memory Connection for a 32-bit Data Bus

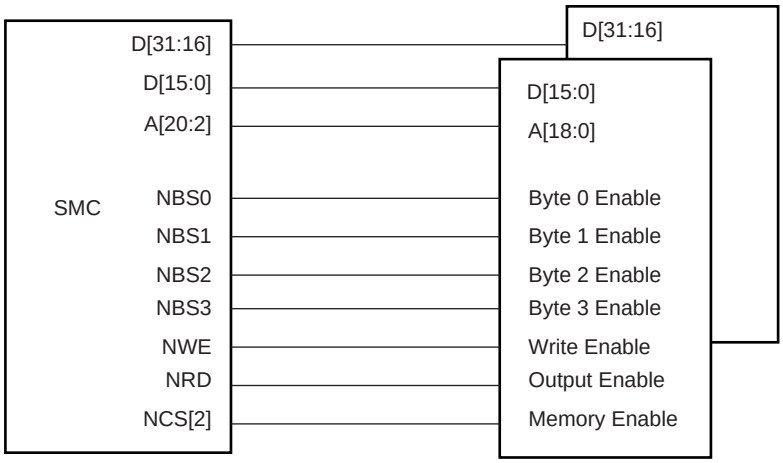

21.7.2.1 Byte Write Access

Byte write access supports one byte write signal per byte of the data bus and a single read signal.

Note that the SMC does not allow boot in Byte Write Access mode.

- For 16-bit devices: the SMC provides NWR0 and NWR1 write signals for respectively byte0 (lower byte) and byte1 (upper byte) of a 16-bit bus. One single read signal (NRD) is provided.

  Byte Write Access is used to connect 2 x 8-bit devices as a 16-bit memory.

- For 32-bit devices: NWR0, NWR1, NWR2 and NWR3, are the write signals of byte0 (lower byte), byte1, byte2 and byte 3 (upper byte) respectively. One single read signal (NRD) is provided.

  Byte Write Access is used to connect 4 x 8-bit devices as a 32-bit memory.

  Byte Write option is illustrated on Figure 21-6.

21.7.2.2 Byte Select Access

In this mode, read/write operations can be enabled/disabled at a byte level. One byte-select line per byte of the data bus is provided. One NRD and one NWE signal control read and write.

- For 16-bit devices: the SMC provides NBS0 and NBS1 selection signals for respectively byte0 (lower byte) and byte1 (upper byte) of a 16-bit bus.

  Byte Select Access is used to connect one 16-bit device.

- For 32-bit devices: NBS0, NBS1, NBS2 and NBS3, are the selection signals of byte0 (lower byte), byte1, byte2 and byte 3 (upper byte) respectively. Byte Select Access is used to connect two 16-bit devices.

Figure 21-7 shows how to connect two 16-bit devices on a 32-bit data bus in Byte Select Access mode, on NCS3 (BAT = Byte Select Access).

Figure 21-6. Connection of 2 x 8-bit Devices on a 16-bit Bus: Byte Write Option

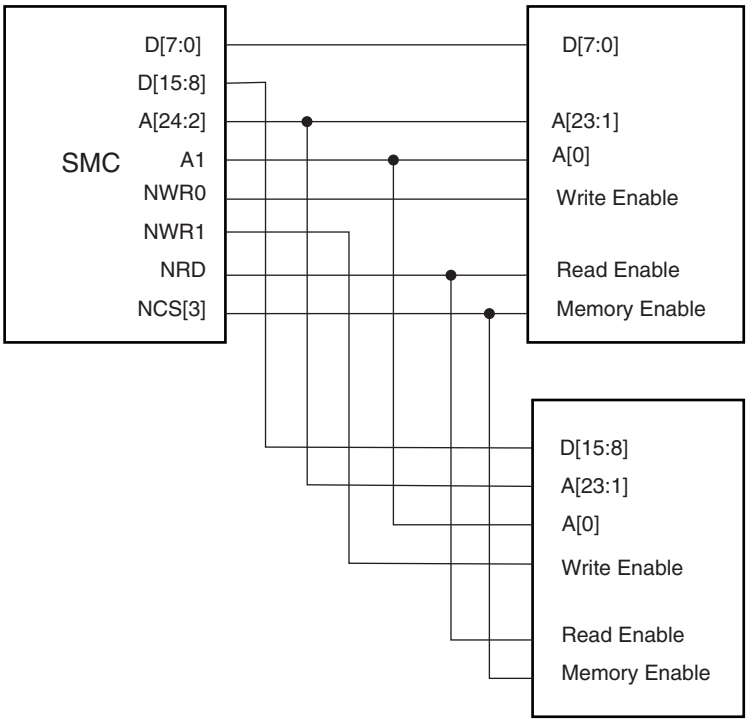

21.7.2.3 Signal Multiplexing

Depending on the BAT, only the write signals or the byte select signals are used. To save IOs at the external bus interface, control signals at the SMC interface are multiplexed. Table 21-3 shows signal multiplexing depending on the data bus width and the byte access type.

For 32-bit devices, bits A0 and A1 are unused. For 16-bit devices, bit A0 of address is unused. When Byte Select Option is selected, NWR1 to NWR3 are unused. When Byte Write option is selected, NBS0 to NBS3 are unused.

Figure 21-7. Connection of 2x16-bit Data Bus on a 32-bit Data Bus (Byte Select Option)

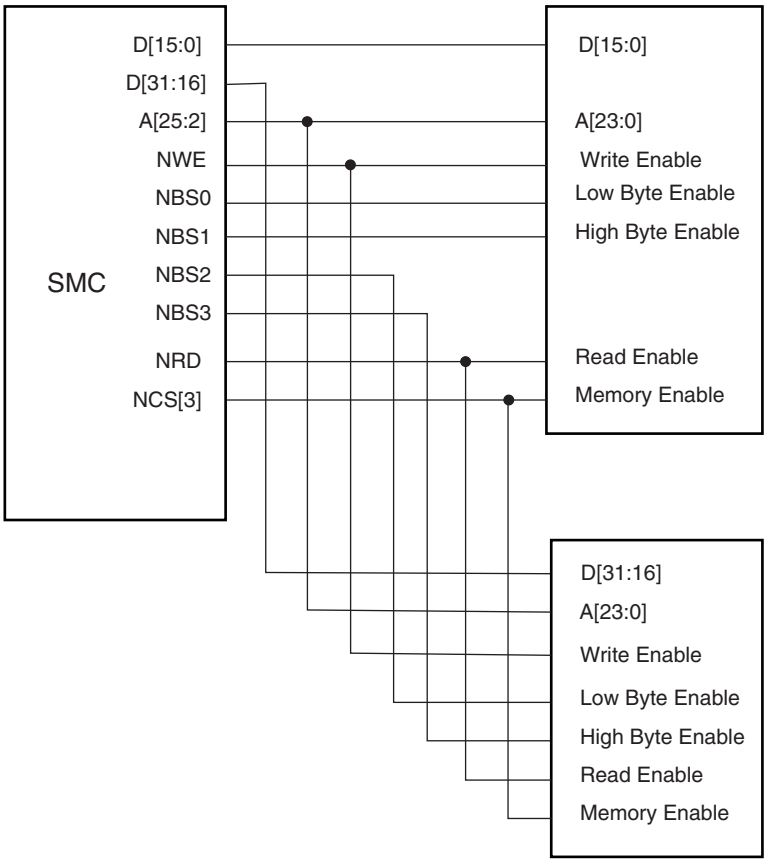

Table 21-3. SMC Multiplexed Signal Translation

Signal Name	32-bit Bus			16-bit Bus		8-bit Bus
Device Type	**1x32-bit**	**2x16-bit**	**4 x 8-bit**	**1x16-bit**	**2 x 8-bit**	**1 x 8-bit**
Byte Access Type (BAT)	Byte Select	Byte Select	Byte Write	Byte Select	Byte Write	
NBS0_A0	NBS0	NBS0		NBS0		A0
NWE_NWR0	NWE	NWE	NWR0	NWE	NWR0	NWE
NBS1_NWR1	NBS1	NBS1	NWR1	NBS1	NWR1	
NBS2_NWR2_A1	NBS2	NBS2	NWR2	A1	A1	A1
NBS3_NWR3	NBS3	NBS3	NWR3			

21.8 Standard Read and Write Protocols

In the following sections, the byte access type is not considered. Byte select lines (NBS0 to NBS3) always have the same timing as the A address bus. NWE represents either the NWE signal in byte select access type or one of the byte write lines (NWR0 to NWR3) in byte write access type. NWR0 to NWR3 have the same timings and protocol as NWE. In the same way, NCS represents one of the NCS[0..5] chip select lines.

21.8.1 Read Waveforms

The read cycle is shown on Figure 21-8.

The read cycle starts with the address setting on the memory address bus, i.e.:

{A[25:2], A1, A0} for 8-bit devices

{A[25:2], A1} for 16-bit devices

A[25:2] for 32-bit devices.

Figure 21-8. Standard Read Cycle

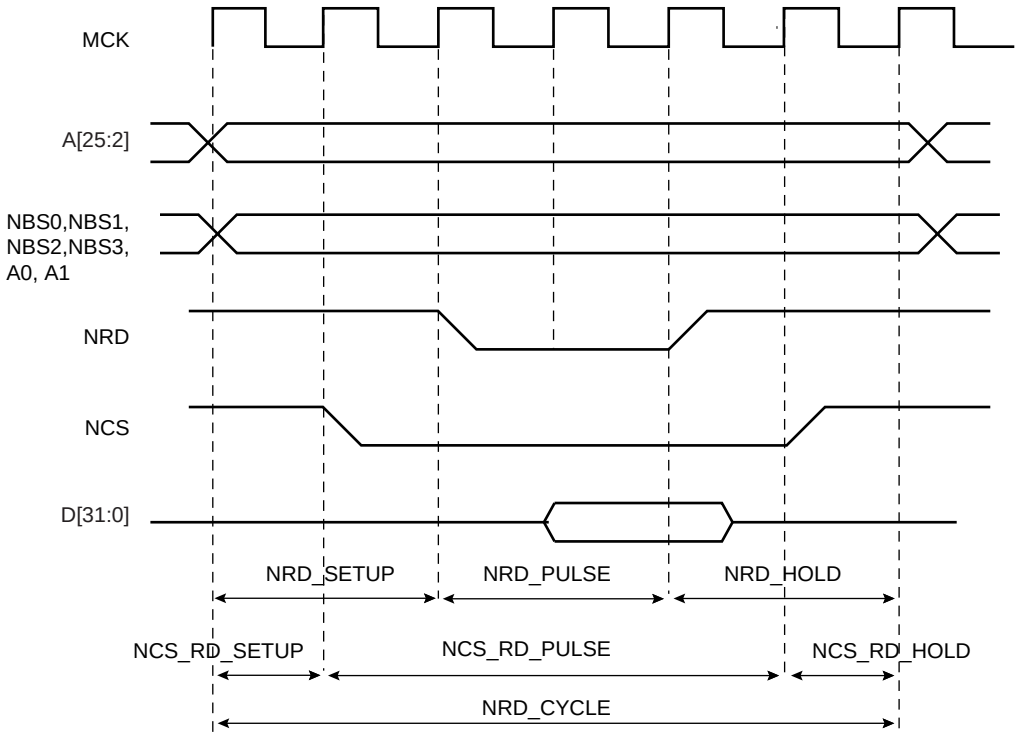

21.8.1.1 NRD Waveform

The NRD signal is characterized by a setup timing, a pulse width and a hold timing.

1. NRD_SETUP: the NRD setup time is defined as the setup of address before the NRD falling edge;
2. NRD_PULSE: the NRD pulse length is the time between NRD falling edge and NRD rising edge;
3. NRD_HOLD: the NRD hold time is defined as the hold time of address after the NRD rising edge.

21.8.1.2 NCS Waveform

Similarly, the NCS signal can be divided into a setup time, pulse length and hold time:

1. NCS_RD_SETUP: the NCS setup time is defined as the setup time of address before the NCS falling edge.
2. NCS_RD_PULSE: the NCS pulse length is the time between NCS falling edge and NCS rising edge;
3. NCS_RD_HOLD: the NCS hold time is defined as the hold time of address after the NCS rising edge.

21.8.1.3 Read Cycle

The NRD_CYCLE time is defined as the total duration of the read cycle, i.e., from the time where address is set on the address bus to the point where address may change. The total read cycle time is equal to:

NRD_CYCLE = NRD_SETUP + NRD_PULSE + NRD_HOLD

= NCS_RD_SETUP + NCS_RD_PULSE + NCS_RD_HOLD

All NRD and NCS timings are defined separately for each chip select as an integer number of Master Clock cycles. To ensure that the NRD and NCS timings are coherent, user must define the total read cycle instead of the hold timing. NRD_CYCLE implicitly defines the NRD hold time and NCS hold time as:

NRD_HOLD = NRD_CYCLE - NRD SETUP - NRD PULSE

NCS_RD_HOLD = NRD_CYCLE - NCS_RD_SETUP - NCS_RD_PULSE

21.8.1.4 Null Delay Setup and Hold

If null setup and hold parameters are programmed for NRD and/or NCS, NRD and NCS remain active continuously in case of consecutive read cycles in the same memory (see Figure 21-9).

Figure 21-9. No Setup, No Hold On NRD and NCS Read Signals

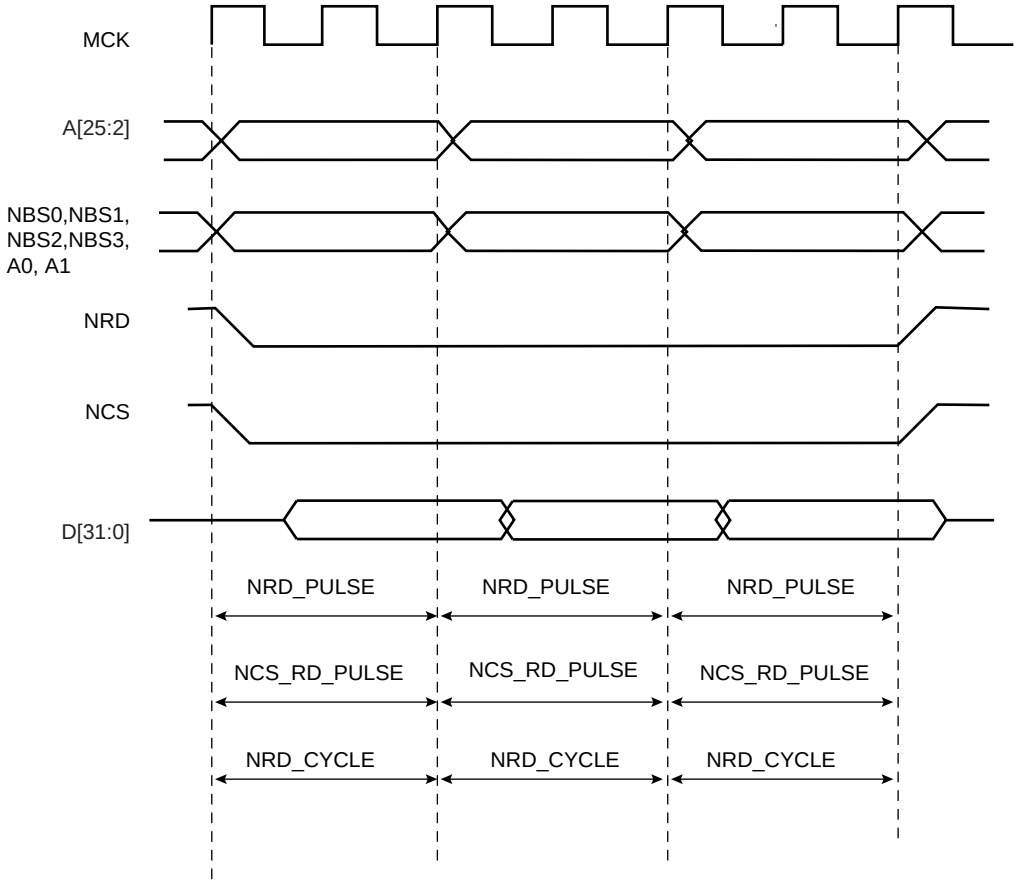

21.8.1.5 *Null Pulse*

Programming null pulse is not permitted. Pulse must be at least set to 1. A null value leads to unpredictable behavior.

21.8.2 Read Mode

As NCS and NRD waveforms are defined independently of one other, the SMC needs to know when the read data is available on the data bus. The SMC does not compare NCS and NRD timings to know which signal rises first. The READ_MODE parameter in the SMC_MODE register of the corresponding chip select indicates which signal of NRD and NCS controls the read operation.

21.8.2.1 *Read is Controlled by NRD (READ_MODE = 1):*

Figure 21-10 shows the waveforms of a read operation of a typical asynchronous RAM. The read data is available t_{PACC} after the falling edge of NRD, and turns to 'Z' after the rising edge of NRD. In this case, the READ_MODE must be set to 1 (read is controlled by NRD), to indicate that data is available with the rising edge of NRD. The SMC samples the read data internally on the rising edge of Master Clock that generates the rising edge of NRD, whatever the programmed waveform of NCS may be.

Figure 21-10. READ_MODE = 1: Data is sampled by SMC before the rising edge of NRD

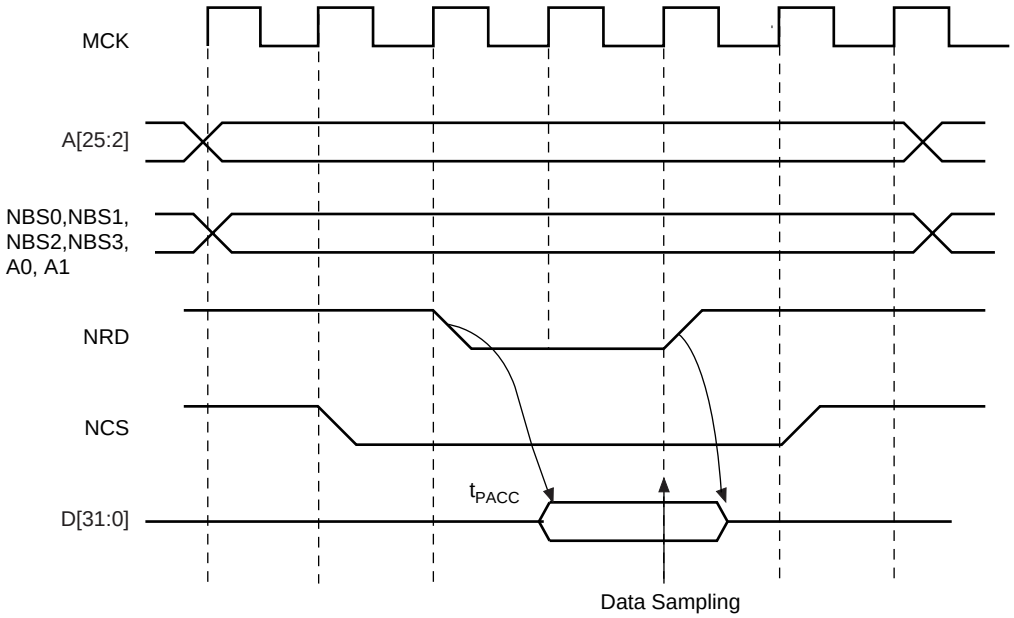

21.8.2.2 *Read is Controlled by NCS (READ_MODE = 0)*

Figure 21-11 shows the typical read cycle of an LCD module. The read data is valid t_{PACC} after the falling edge of the NCS signal and remains valid until the rising edge of NCS. Data must be sampled when NCS is raised. In that case, the READ_MODE must be set to 0 (read is controlled by NCS): the SMC internally samples the data on the rising edge of Master Clock that generates the rising edge of NCS, whatever the programmed waveform of NRD may be.

Figure 21-11. READ_MODE = 0: Data is sampled by SMC before the rising edge of NCS

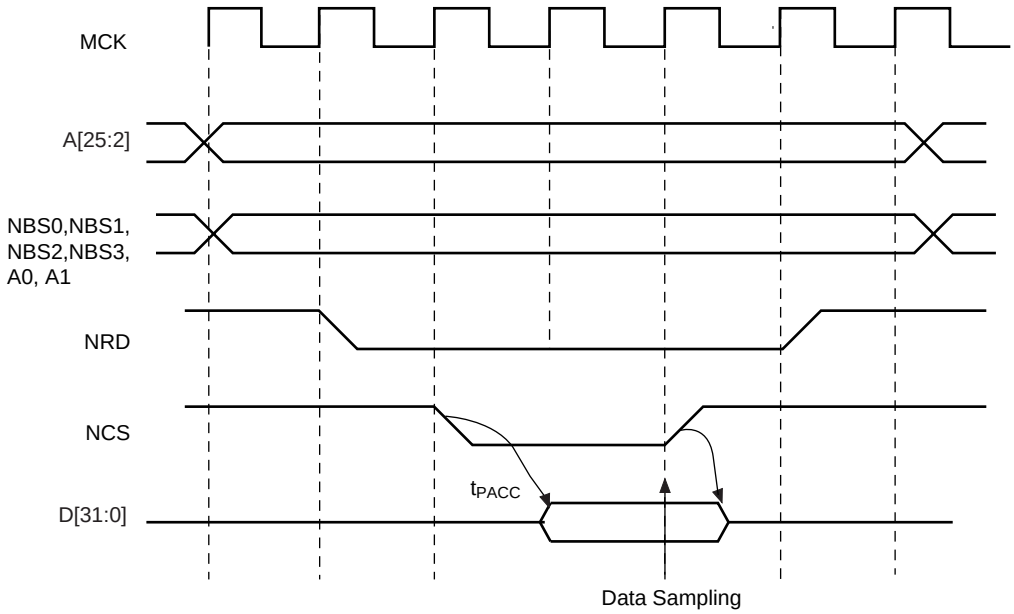

21.8.3 Write Waveforms

The write protocol is similar to the read protocol. It is depicted in Figure 21-12. The write cycle starts with the address setting on the memory address bus.

21.8.3.1 NWE Waveforms

The NWE signal is characterized by a setup timing, a pulse width and a hold timing.

1. NWE_SETUP: the NWE setup time is defined as the setup of address and data before the NWE falling edge;
2. NWE_PULSE: The NWE pulse length is the time between NWE falling edge and NWE rising edge;
3. NWE_HOLD: The NWE hold time is defined as the hold time of address and data after the NWE rising edge.

The NWE waveforms apply to all byte-write lines in Byte Write access mode: NWR0 to NWR3.

21.8.3.2 NCS Waveforms

The NCS signal waveforms in write operation are not the same that those applied in read operations, but are separately defined:

1. NCS_WR_SETUP: the NCS setup time is defined as the setup time of address before the NCS falling edge.
2. NCS_WR_PULSE: the NCS pulse length is the time between NCS falling edge and NCS rising edge;
3. NCS_WR_HOLD: the NCS hold time is defined as the hold time of address after the NCS rising edge.

Figure 21-12. Write Cycle

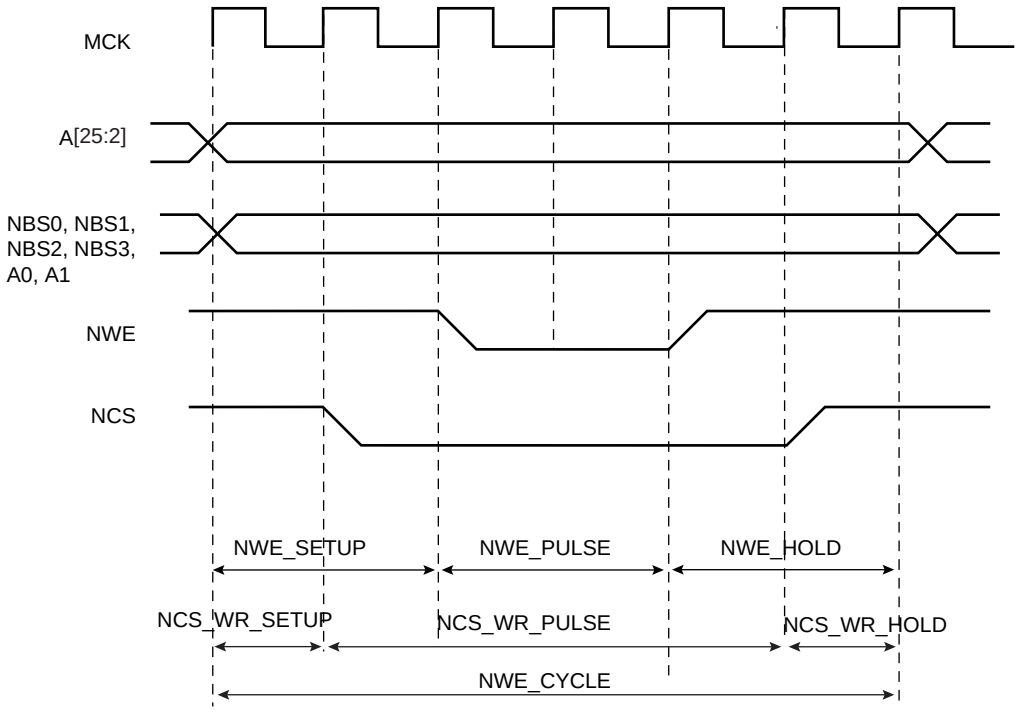

21.8.3.3 Write Cycle

The write_cycle time is defined as the total duration of the write cycle, that is, from the time where address is set on the address bus to the point where address may change. The total write cycle time is equal to:

NWE_CYCLE = NWE_SETUP + NWE_PULSE + NWE_HOLD

= NCS_WR_SETUP + NCS_WR_PULSE + NCS_WR_HOLD

All NWE and NCS (write) timings are defined separately for each chip select as an integer number of Master Clock cycles. To ensure that the NWE and NCS timings are coherent, the user must define the total write cycle instead of the hold timing. This implicitly defines the NWE hold time and NCS (write) hold times as:

NWE_HOLD = NWE_CYCLE - NWE_SETUP - NWE_PULSE

NCS_WR_HOLD = NWE_CYCLE - NCS_WR_SETUP - NCS_WR_PULSE

21.8.3.4 Null Delay Setup and Hold

If null setup parameters are programmed for NWE and/or NCS, NWE and/or NCS remain active continuously in case of consecutive write cycles in the same memory (see Figure 21-13). However, for devices that perform write operations on the rising edge of NWE or NCS, such as SRAM, either a setup or a hold must be programmed.

Figure 21-13. Null Setup and Hold Values of NCS and NWE in Write Cycle

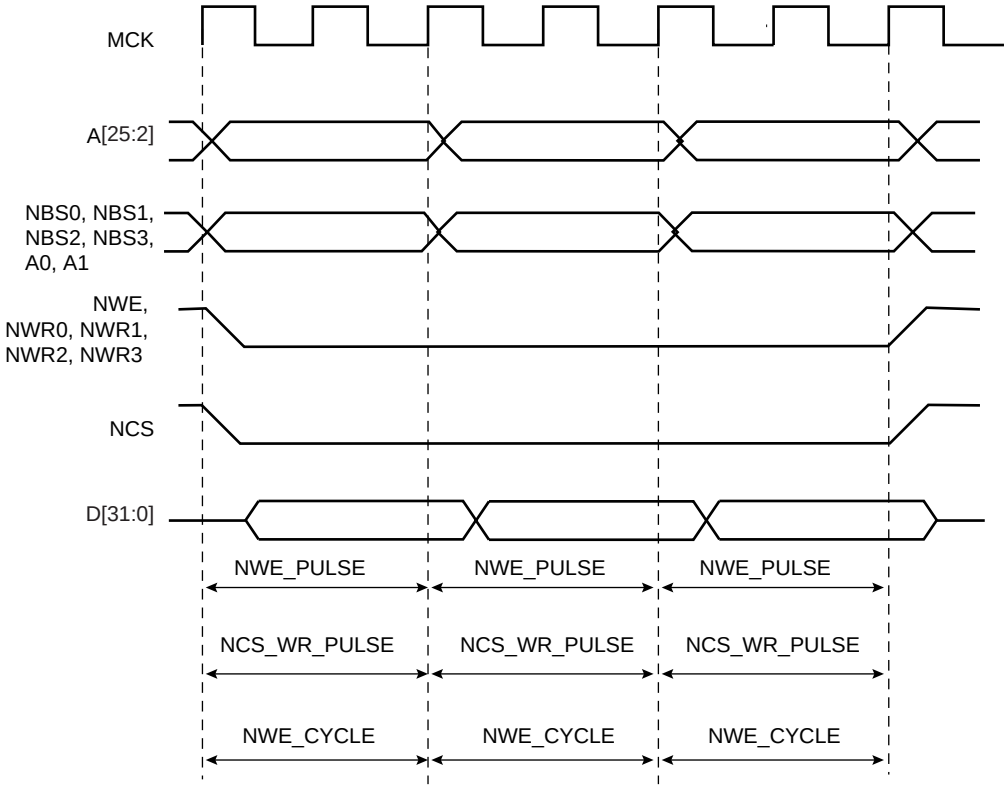

21.8.3.5 Null Pulse

Programming null pulse is not permitted. Pulse must be at least set to 1. A null value leads to unpredictable behavior.

21.8.4 Write Mode

The WRITE_MODE parameter in the SMC_MODE register of the corresponding chip select indicates which signal controls the write operation.

21.8.4.1 Write is Controlled by NWE (WRITE_MODE = 1):

Figure 21-14 shows the waveforms of a write operation with WRITE_MODE set to 1. The data is put on the bus during the pulse and hold steps of the NWE signal. The internal data buffers are turned out after the NWE_SETUP time, and until the end of the write cycle, regardless of the programmed waveform on NCS.

Figure 21-14. WRITE_MODE = 1. The write operation is controlled by NWE

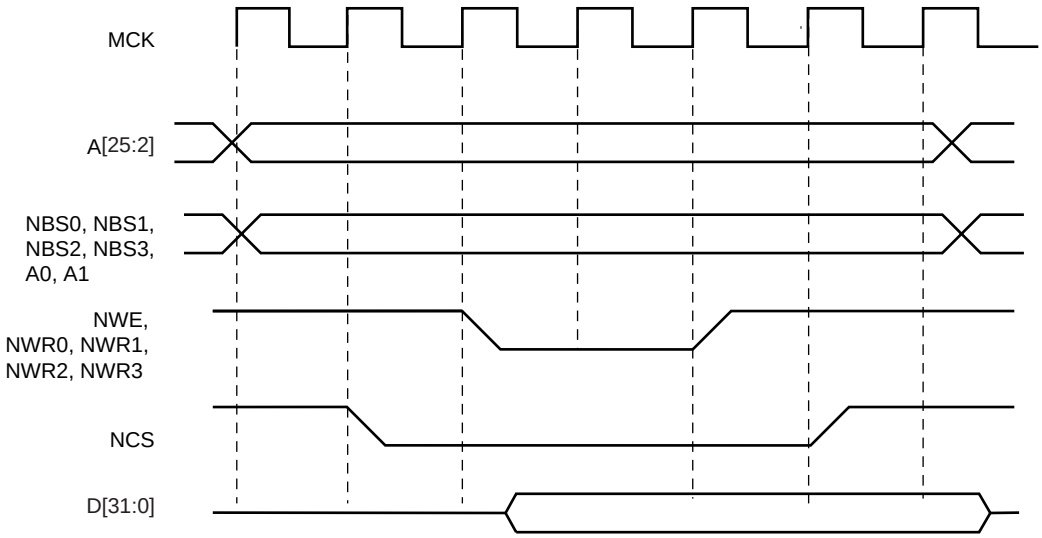

21.8.4.2 Write is Controlled by NCS (WRITE_MODE = 0)

Figure 21-15 shows the waveforms of a write operation with WRITE_MODE set to 0. The data is put on the bus during the pulse and hold steps of the NCS signal. The internal data buffers are turned out after the NCS_WR_SETUP time, and until the end of the write cycle, regardless of the programmed waveform on NWE.

Figure 21-15. WRITE_MODE = 0. The write operation is controlled by NCS

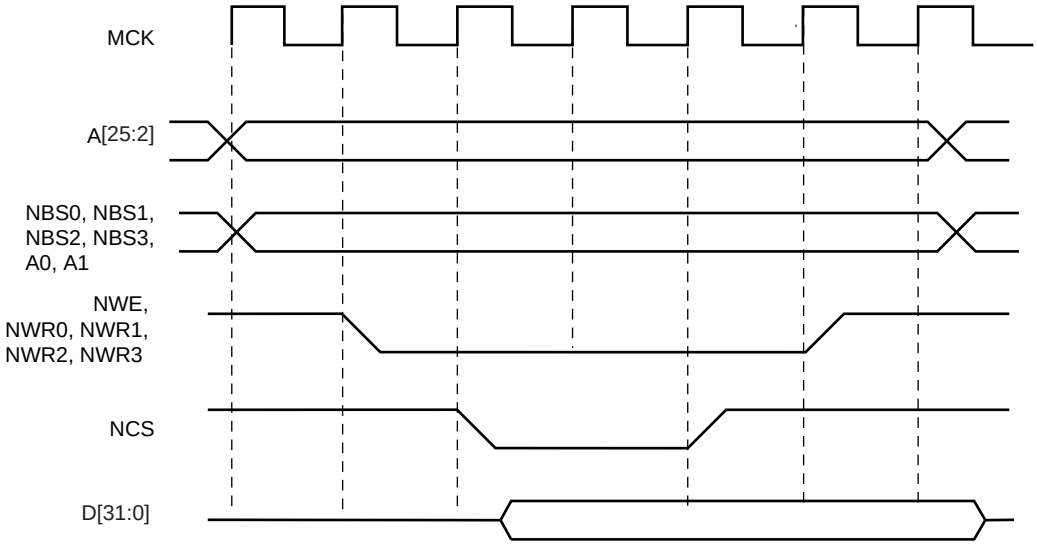

21.8.5 Coding Timing Parameters

All timing parameters are defined for one chip select and are grouped together in one SMC_REGISTER according to their type.

The SMC_SETUP register groups the definition of all setup parameters:

- NRD_SETUP, NCS_RD_SETUP, NWE_SETUP, NCS_WR_SETUP

The SMC_PULSE register groups the definition of all pulse parameters:

• NRD_PULSE, NCS_RD_PULSE, NWE_PULSE, NCS_WR_PULSE

The SMC_CYCLE register groups the definition of all cycle parameters:

• NRD_CYCLE, NWE_CYCLE

Table 21-4 shows how the timing parameters are coded and their permitted range.

Table 21-4. Coding and Range of Timing Parameters

Coded Value	Number of Bits	Effective Value	Permitted Range	
			Coded Value	Effective Value
setup [5:0]	6	128 x setup[5] + setup[4:0]	0 ≤ ≤ 31	0 ≤ ≤ 128+31
pulse [6:0]	7	256 x pulse[6] + pulse[5:0]	0 ≤ ≤ 63	0 ≤ ≤ 256+63
cycle [8:0]	9	256 x cycle[8:7] + cycle[6:0]	0 ≤ ≤ 127	0 ≤ ≤ 256+127 0 ≤ ≤ 512+127 0 ≤ ≤ 768+127

21.8.6 Reset Values of Timing Parameters

Table 21-8 gives the default value of timing parameters at reset.

21.8.7 Usage Restriction

The SMC does not check the validity of the user-programmed parameters. If the sum of SETUP and PULSE parameters is larger than the corresponding CYCLE parameter, this leads to unpredictable behavior of the SMC.

For read operations:

Null but positive setup and hold of address and NRD and/or NCS can not be guaranteed at the memory interface because of the propagation delay of theses signals through external logic and pads. If positive setup and hold values must be verified, then it is strictly recommended to program non-null values so as to cover possible skews between address, NCS and NRD signals.

For write operations:

If a null hold value is programmed on NWE, the SMC can guarantee a positive hold of address, byte select lines, and NCS signal after the rising edge of NWE. This is true for WRITE_MODE = 1 only. See "Early Read Wait State" on page 197.

For read and write operations: a null value for pulse parameters is forbidden and may lead to unpredictable behavior.

In read and write cycles, the setup and hold time parameters are defined in reference to the address bus. For external devices that require setup and hold time between NCS and NRD signals (read), or between NCS and NWE signals (write), these setup and hold times must be converted into setup and hold times in reference to the address bus.

21.9 Automatic Wait States

Under certain circumstances, the SMC automatically inserts idle cycles between accesses to avoid bus contention or operation conflict.

21.9.1 Chip Select Wait States

The SMC always inserts an idle cycle between 2 transfers on separate chip selects. This idle cycle ensures that there is no bus contention between the de-activation of one device and the activation of the next one.

During chip select wait state, all control lines are turned inactive: NBS0 to NBS3, NWR0 to NWR3, NCS[0..5], NRD lines are all set to 1.

Figure 21-16 illustrates a chip select wait state between access on Chip Select 0 and Chip Select 2.

Figure 21-16. Chip Select Wait State between a Read Access on NCS0 and a Write Access on NCS2

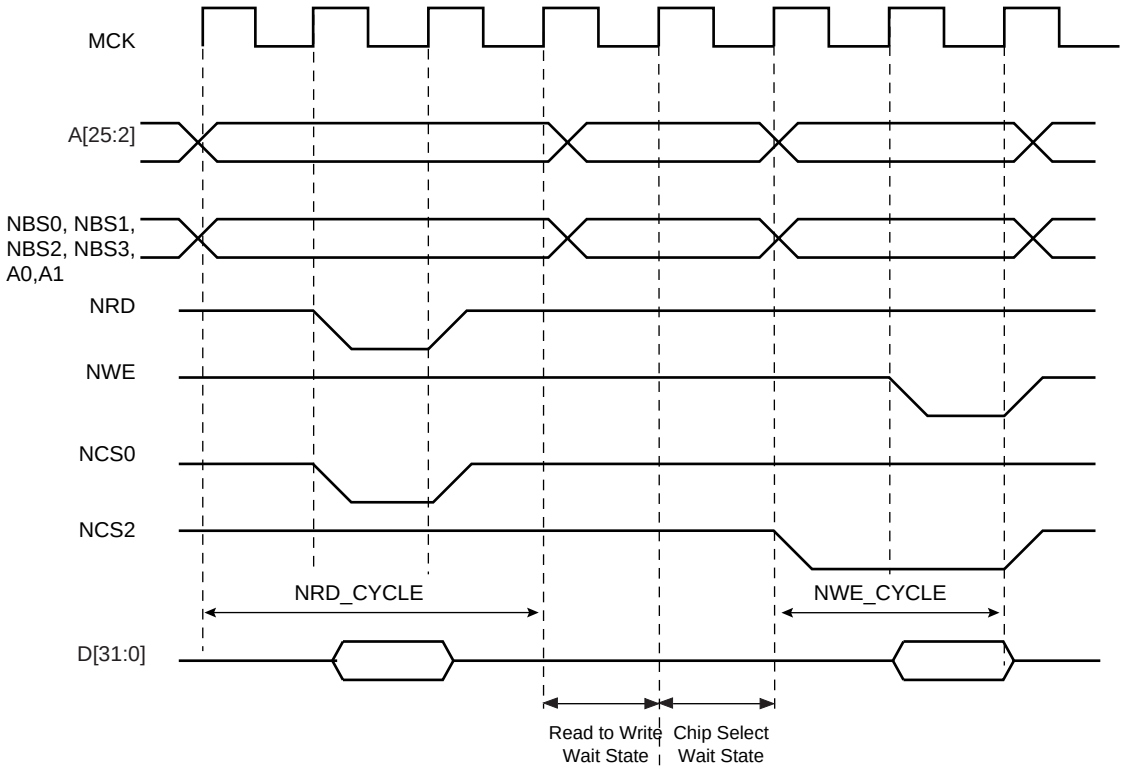

21.9.2 Early Read Wait State

In some cases, the SMC inserts a wait state cycle between a write access and a read access to allow time for the write cycle to end before the subsequent read cycle begins. This wait state is not generated in addition to a chip select wait state. The early read cycle thus only occurs between a write and read access to the same memory device (same chip select).

An early read wait state is automatically inserted if at least one of the following conditions is valid:

- if the write controlling signal has no hold time and the read controlling signal has no setup time (Figure 21-17).
- in NCS write controlled mode (WRITE_MODE = 0), if there is no hold timing on the NCS signal and the NCS_RD_SETUP parameter is set to 0, regardless of the read mode (Figure 21-18). The write operation must end with a NCS rising edge. Without an Early Read Wait State, the write operation could not complete properly.
- in NWE controlled mode (WRITE_MODE = 1) and if there is no hold timing (NWE_HOLD = 0), the feedback of the write control signal is used to control address, data, chip select and byte select lines. If the external write

control signal is not inactivated as expected due to load capacitances, an Early Read Wait State is inserted and address, data and control signals are maintained one more cycle. See Figure 21-19.

Figure 21-17. Early Read Wait State: Write with No Hold Followed by Read with No Setup

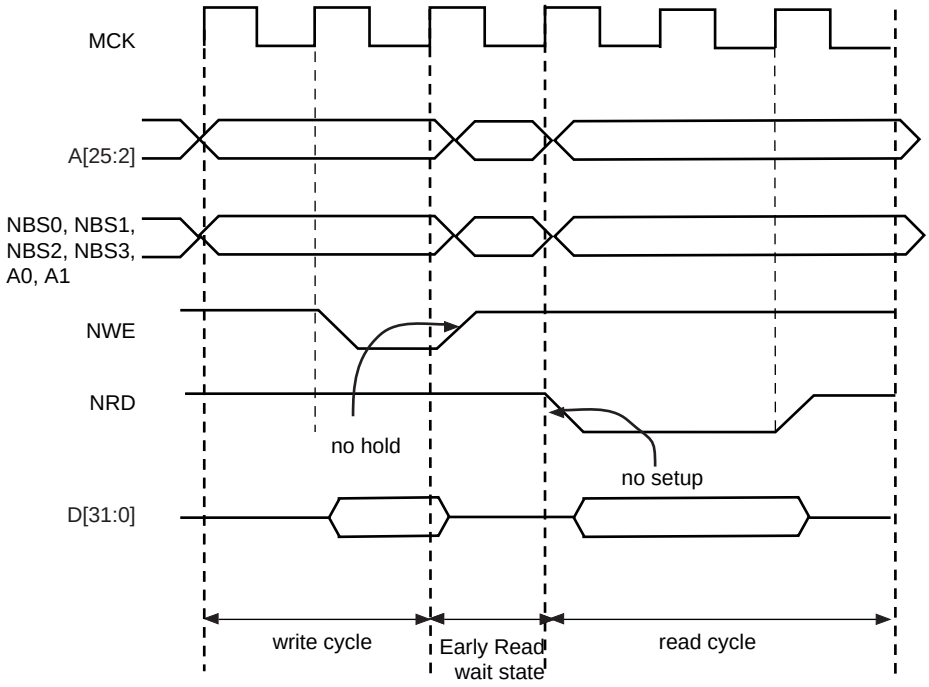

Figure 21-18. Early Read Wait State: NCS Controlled Write with No Hold Followed by a Read with No NCS Setup

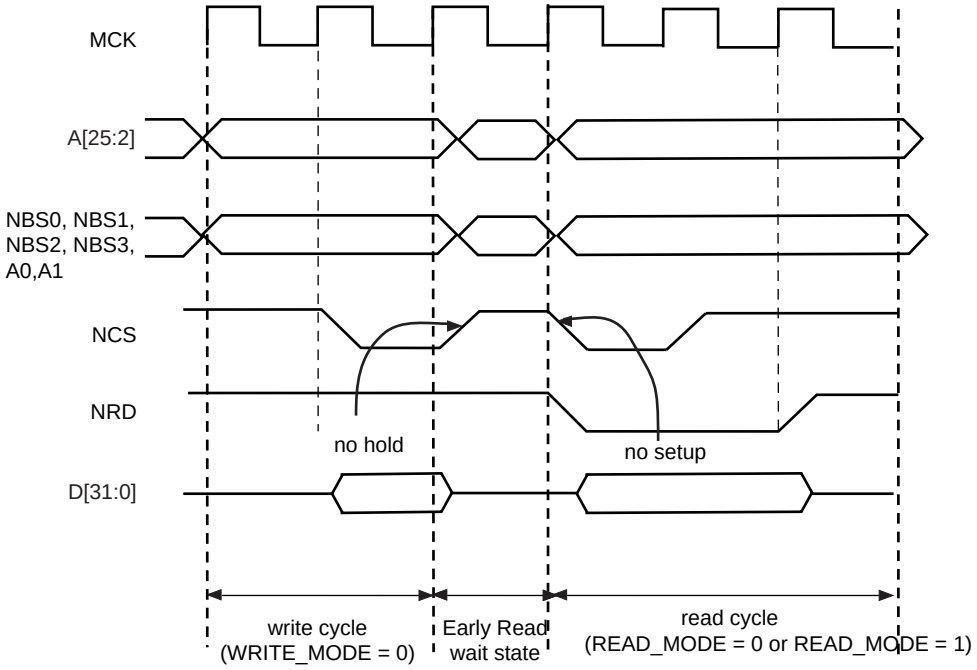

Figure 21-19. Early Read Wait State: NWE-controlled Write with No Hold Followed by a Read with one Set-up Cycle

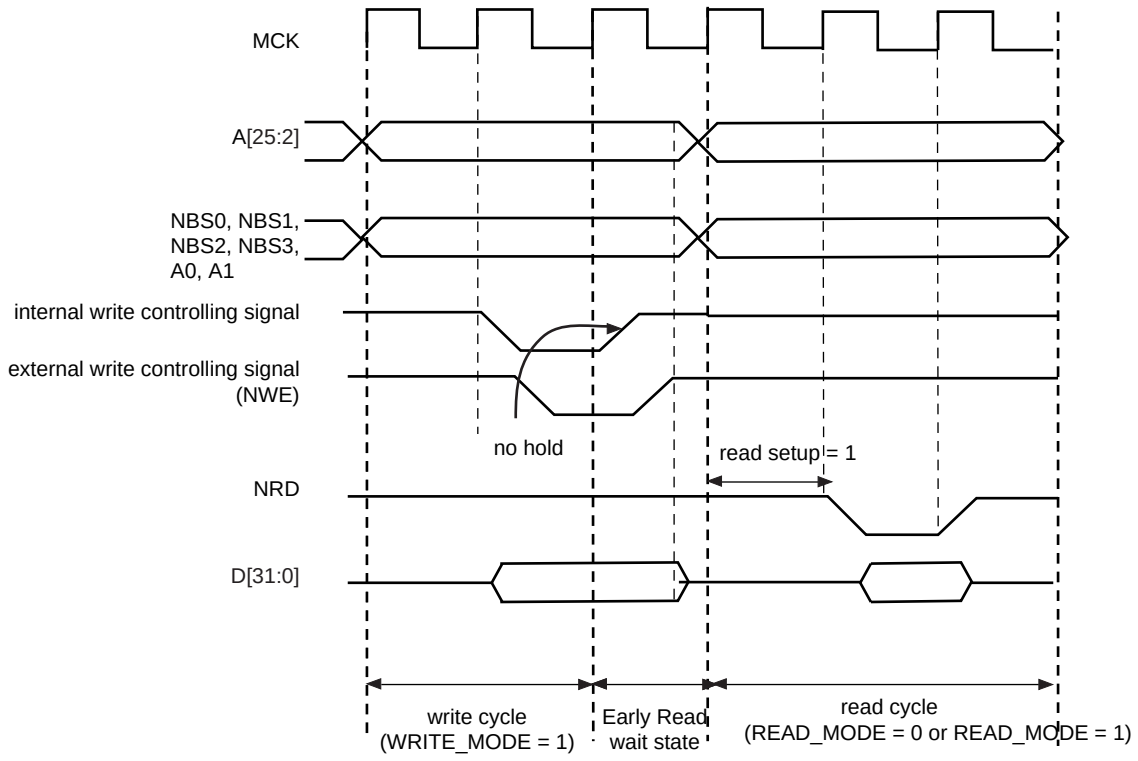

21.9.3 Reload User Configuration Wait State

The user may change any of the configuration parameters by writing the SMC user interface.

When detecting that a new user configuration has been written in the user interface, the SMC inserts a wait state before starting the next access. The so called “Reload User Configuration Wait State” is used by the SMC to load the new set of parameters to apply to next accesses.

The Reload Configuration Wait State is not applied in addition to the Chip Select Wait State. If accesses before and after re-programming the user interface are made to different devices (Chip Selects), then one single Chip Select Wait State is applied.

On the other hand, if accesses before and after writing the user interface are made to the same device, a Reload Configuration Wait State is inserted, even if the change does not concern the current Chip Select.

21.9.3.1 User Procedure

To insert a Reload Configuration Wait State, the SMC detects a write access to any SMC_MODE register of the user interface. If the user only modifies timing registers (SMC_SETUP, SMC_PULSE, SMC_CYCLE registers) in the user interface, he must validate the modification by writing the SMC_MODE, even if no change was made on the mode parameters.

The user must not change the configuration parameters of an SMC Chip Select (Setup, Pulse, Cycle, Mode) if accesses are performed on this CS during the modification. Any change of the Chip Select parameters, while fetching the code from a memory connected on this CS, may lead to unpredictable behavior. The instructions used to modify the parameters of an SMC Chip Select can be executed from the internal RAM or from a memory connected to another CS.

21.9.3.2 *Slow Clock Mode Transition*

A Reload Configuration Wait State is also inserted when the Slow Clock Mode is entered or exited, after the end of the current transfer (see “Slow Clock Mode” on page 211).

21.9.4 Read to Write Wait State

Due to an internal mechanism, a wait cycle is always inserted between consecutive read and write SMC accesses.

This wait cycle is referred to as a read to write wait state in this document.

This wait cycle is applied in addition to chip select and reload user configuration wait states when they are to be inserted. See Figure 21-16 on page 197.

21.10 Data Float Wait States

Some memory devices are slow to release the external bus. For such devices, it is necessary to add wait states (data float wait states) after a read access:

- Before starting a read access to a different external memory
- Before starting a write access to the same device or to a different external one.

The Data Float Output Time (t_{DF}) for each external memory device is programmed in the TDF_CYCLES field of the SMC_MODE register for the corresponding chip select. The value of TDF_CYCLES indicates the number of data float wait cycles (between 0 and 15) before the external device releases the bus, and represents the time allowed for the data output to go to high impedance after the memory is disabled.

Data float wait states do not delay internal memory accesses. Hence, a single access to an external memory with long t_{DF} will not slow down the execution of a program from internal memory.

The data float wait states management depends on the READ_MODE and the TDF_MODE fields of the SMC_MODE register for the corresponding chip select.

21.10.1 READ_MODE

Setting the READ_MODE to 1 indicates to the SMC that the NRD signal is responsible for turning off the tri-state buffers of the external memory device. The Data Float Period then begins after the rising edge of the NRD signal and lasts TDF_CYCLES MCK cycles.

When the read operation is controlled by the NCS signal (READ_MODE = 0), the TDF field gives the number of MCK cycles during which the data bus remains busy after the rising edge of NCS.

Figure 21-20 illustrates the Data Float Period in NRD-controlled mode (READ_MODE =1), assuming a data float period of 2 cycles (TDF_CYCLES = 2). Figure 21-21 shows the read operation when controlled by NCS (READ_MODE = 0) and the TDF_CYCLES parameter equals 3.

Figure 21-20. TDF Period in NRD Controlled Read Access (TDF = 2)

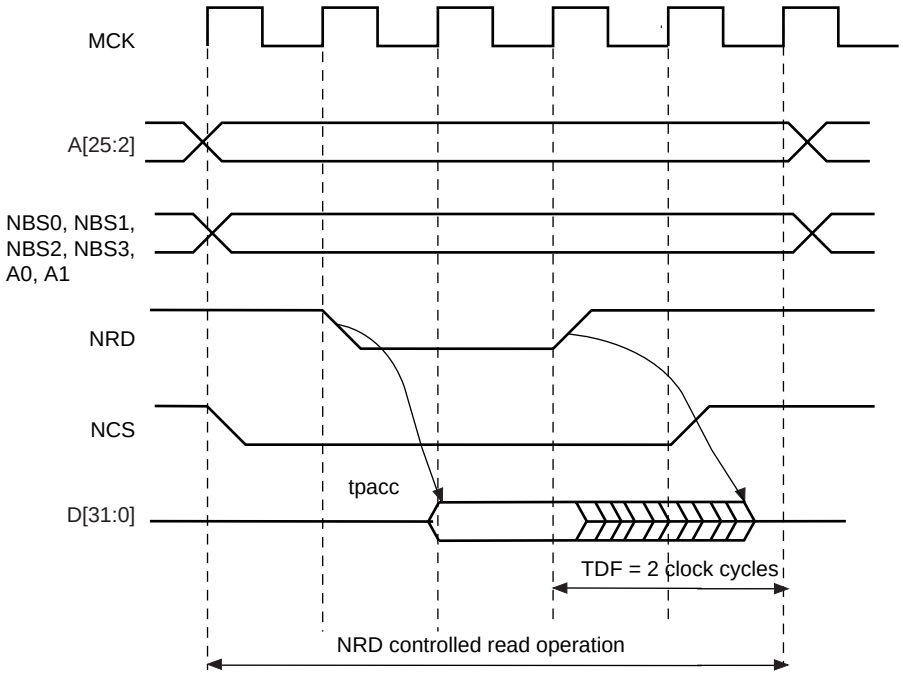

Figure 21-21. TDF Period in NCS Controlled Read Operation (TDF = 3)

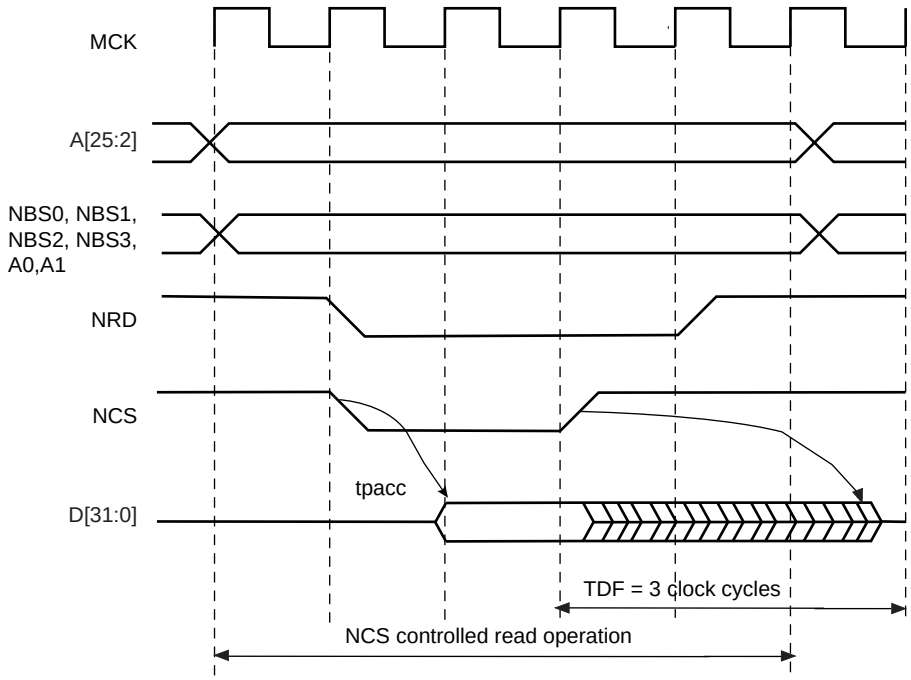

21.10.2 TDF Optimization Enabled (TDF_MODE = 1)

When the TDF_MODE of the SMC_MODE register is set to 1 (TDF optimization is enabled), the SMC takes advantage of the setup period of the next access to optimize the number of wait states cycle to insert.

Figure 21-22 shows a read access controlled by NRD, followed by a write access controlled by NWE, on Chip Select 0. Chip Select 0 has been programmed with:

NRD_HOLD = 4; READ_MODE = 1 (NRD controlled)

NWE_SETUP = 3; WRITE_MODE = 1 (NWE controlled)

TDF_CYCLES = 6; TDF_MODE = 1 (optimization enabled).

Figure 21-22. TDF Optimization: No TDF wait states are inserted if the TDF period is over when the next access begins

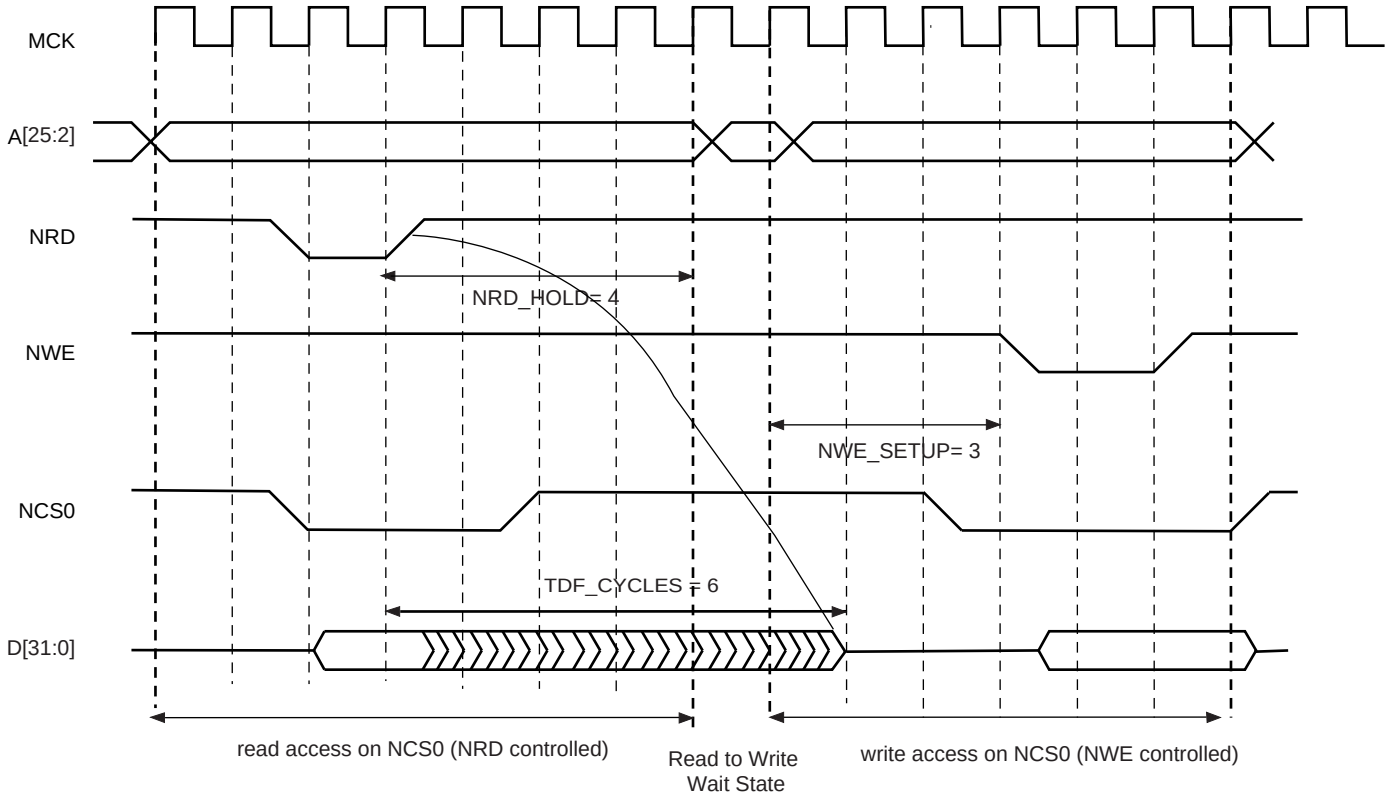

21.10.3 TDF Optimization Disabled (TDF_MODE = 0)

When optimization is disabled, tdf wait states are inserted at the end of the read transfer, so that the data float period is ended when the second access begins. If the hold period of the read1 controlling signal overlaps the data float period, no additional tdf wait states will be inserted.

Figure 21-23, Figure 21-24 and Figure 21-25 illustrate the cases:

- Read access followed by a read access on another chip select,
- Read access followed by a write access on another chip select,
- Read access followed by a write access on the same chip select,

with no TDF optimization.

Figure 21-23. TDF Optimization Disabled (TDF Mode = 0). TDF wait states between 2 read accesses on different chip selects

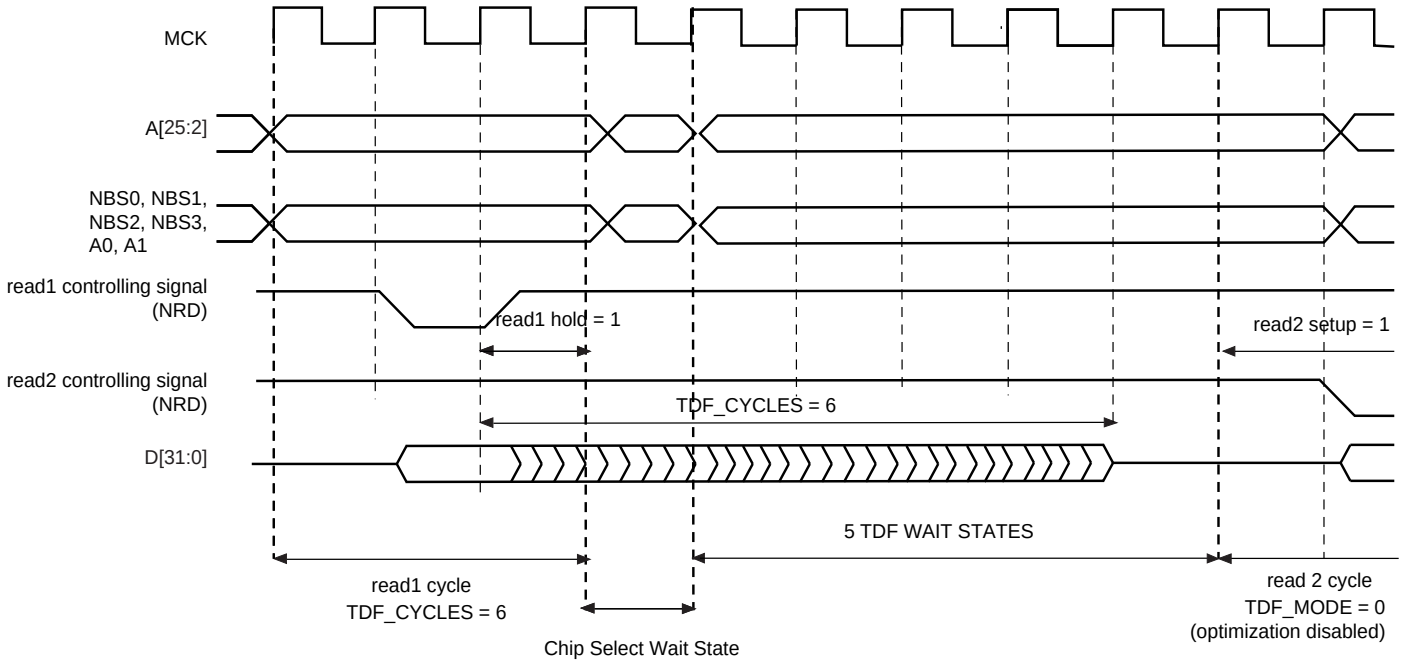

Figure 21-24. TDF Mode = 0: TDF wait states between a read and a write access on different chip selects

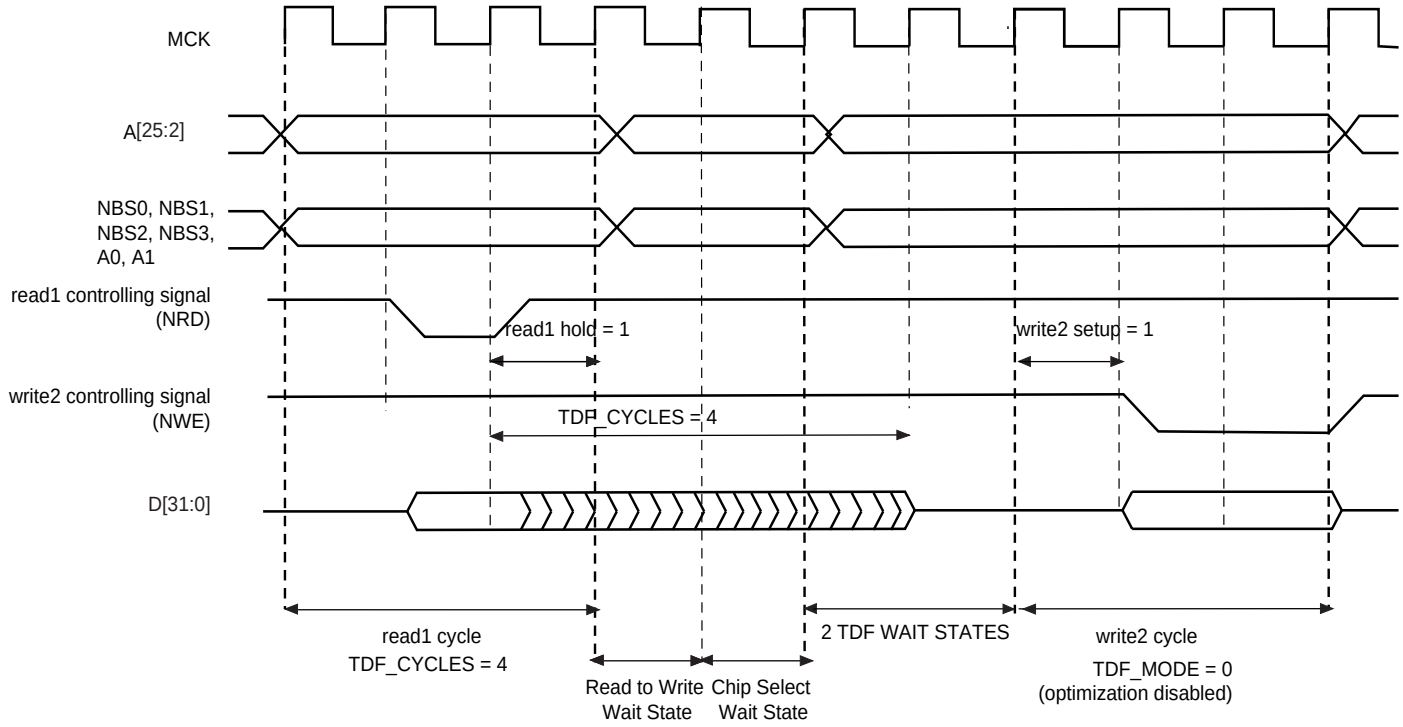

Figure 21-25. TDF Mode = 0: TDF wait states between read and write accesses on the same chip select

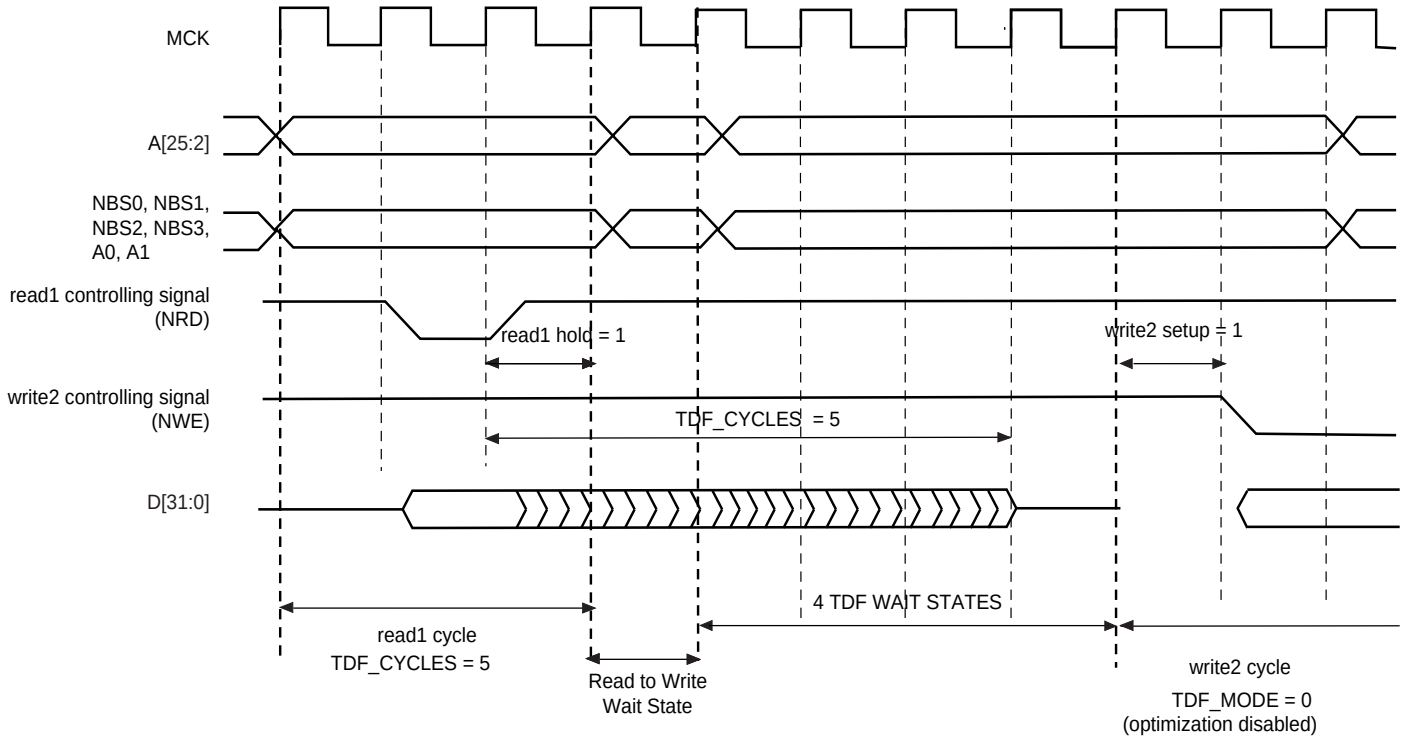

21.11 External Wait

Any access can be extended by an external device using the NWAIT input signal of the SMC. The EXNW_MODE field of the SMC_MODE register on the corresponding chip select must be set to either to “10” (frozen mode) or “11” (ready mode). When the EXNW_MODE is set to “00” (disabled), the NWAIT signal is simply ignored on the corresponding chip select. The NWAIT signal delays the read or write operation in regards to the read or write controlling signal, depending on the read and write modes of the corresponding chip select.

21.11.1 Restriction

When one of the EXNW_MODE is enabled, **it is mandatory to program at least one hold cycle for the read/write controlling signal. For that reason, the NWAIT signal cannot be used in Page Mode (“Asynchronous Page Mode” on page 214), or in Slow Clock Mode (“Slow Clock Mode” on page 211).**

The NWAIT signal is assumed to be a response of the external device to the read/write request of the SMC. Then NWAIT is examined by the SMC only in the pulse state of the read or write controlling signal. The assertion of the NWAIT signal outside the expected period has no impact on SMC behavior.

21.11.2 Frozen Mode

When the external device asserts the NWAIT signal (active low), and after internal synchronization of this signal, the SMC state is frozen, i.e., SMC internal counters are frozen, and all control signals remain unchanged. When the resynchronized NWAIT signal is deasserted, the SMC completes the access, resuming the access from the point where it was stopped. See Figure 21-26. This mode must be selected when the external device uses the NWAIT signal to delay the access and to freeze the SMC.

The assertion of the NWAIT signal outside the expected period is ignored as illustrated in Figure 21-27.

Figure 21-26. Write Access with NWAIT Assertion in Frozen Mode (EXNW_MODE = 10)

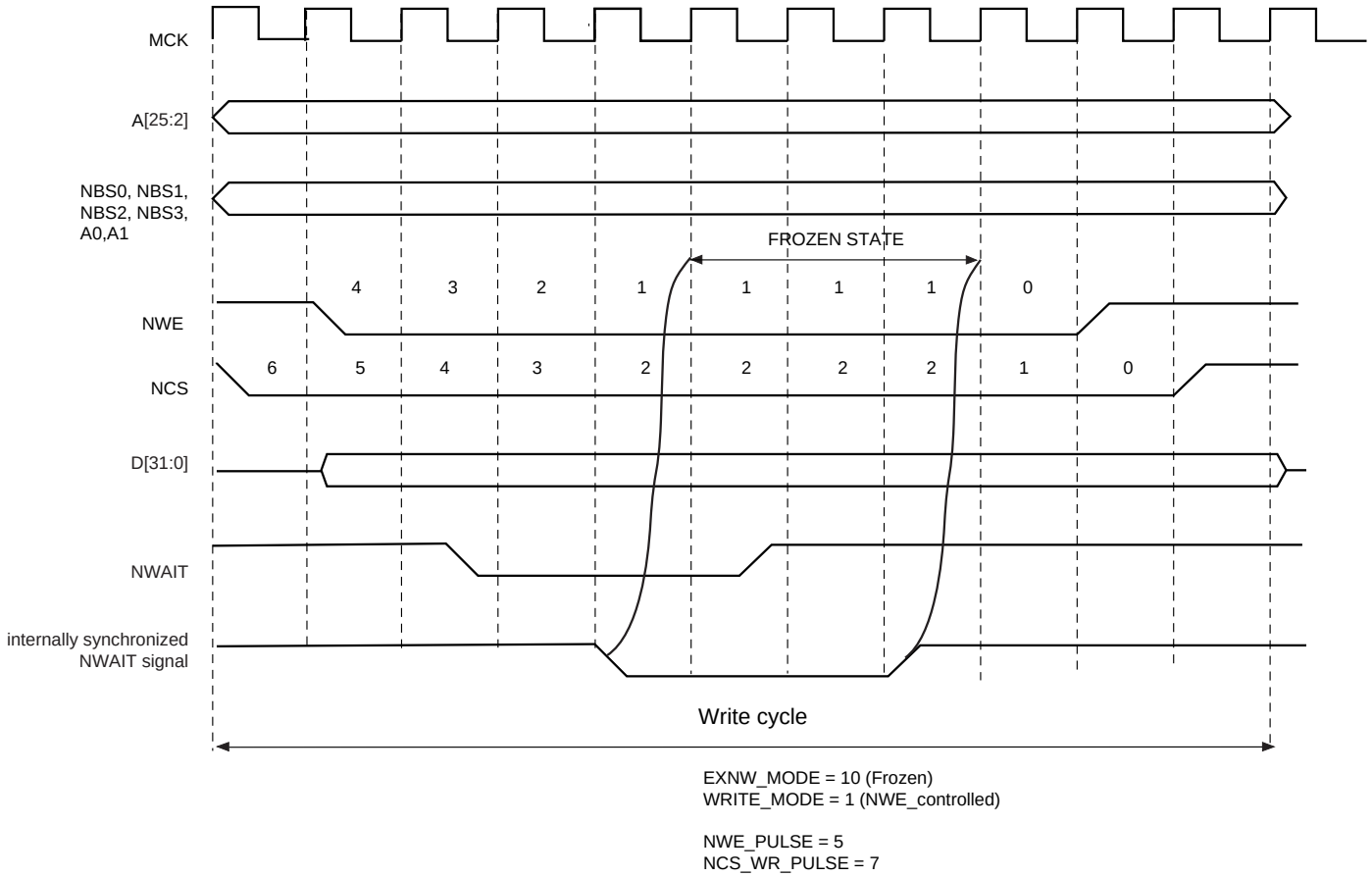

Figure 21-27. Read Access with NWAIT Assertion in Frozen Mode (EXNW_MODE = 10)

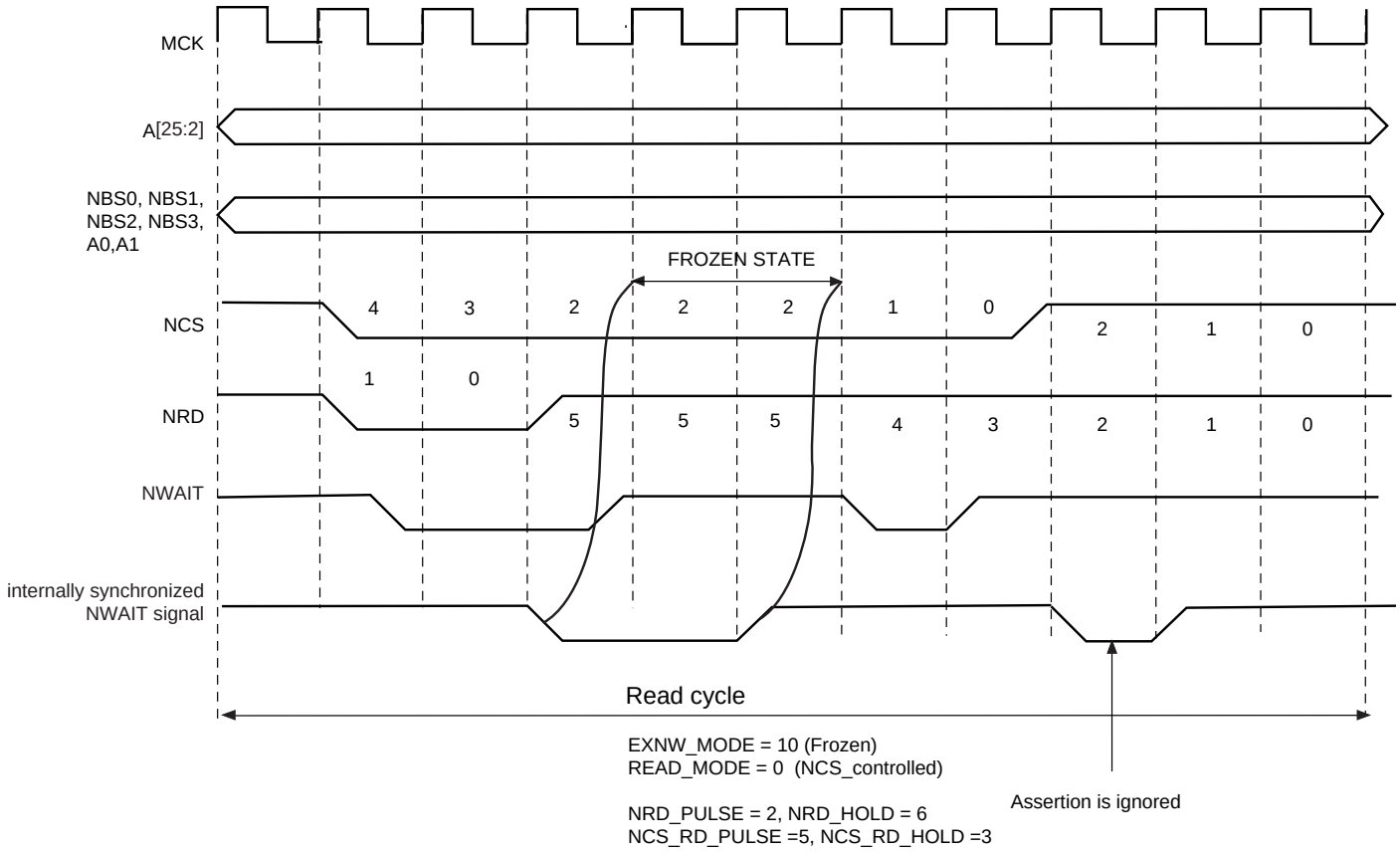

21.11.3 Ready Mode

In Ready mode (EXNW_MODE = 11), the SMC behaves differently. Normally, the SMC begins the access by down counting the setup and pulse counters of the read/write controlling signal. In the last cycle of the pulse phase, the resynchronized NWAIT signal is examined.

If asserted, the SMC suspends the access as shown in Figure 21-28 and Figure 21-29. After deassertion, the access is completed: the hold step of the access is performed.

This mode must be selected when the external device uses deassertion of the NWAIT signal to indicate its ability to complete the read or write operation.

If the NWAIT signal is deasserted before the end of the pulse, or asserted after the end of the pulse of the controlling read/write signal, it has no impact on the access length as shown in Figure 21-29.

Figure 21-28. NWAIT Assertion in Write Access: Ready Mode (EXNW_MODE = 11)

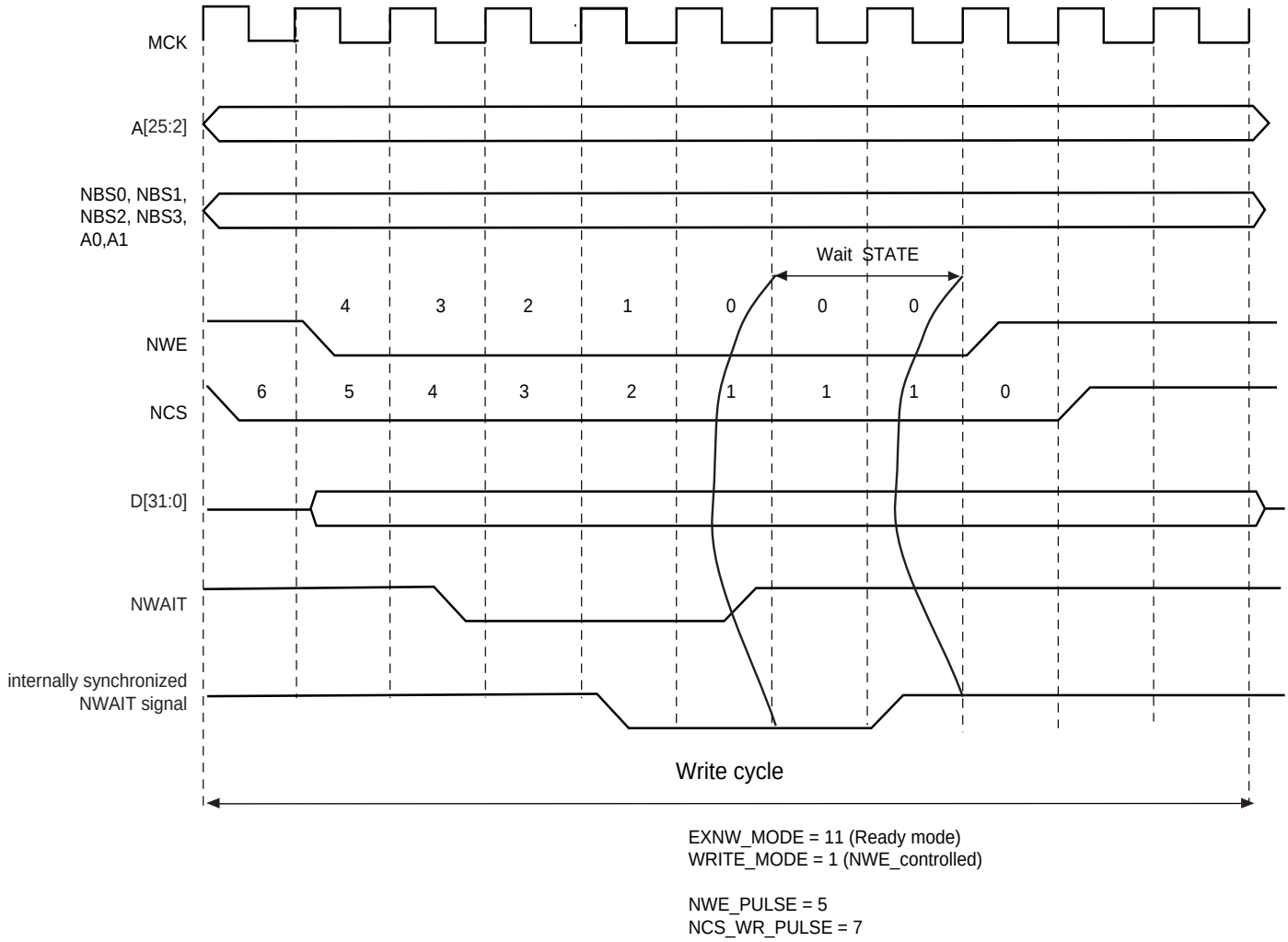

Figure 21-29. NWAIT Assertion in Read Access: Ready Mode (EXNW_MODE = 11)

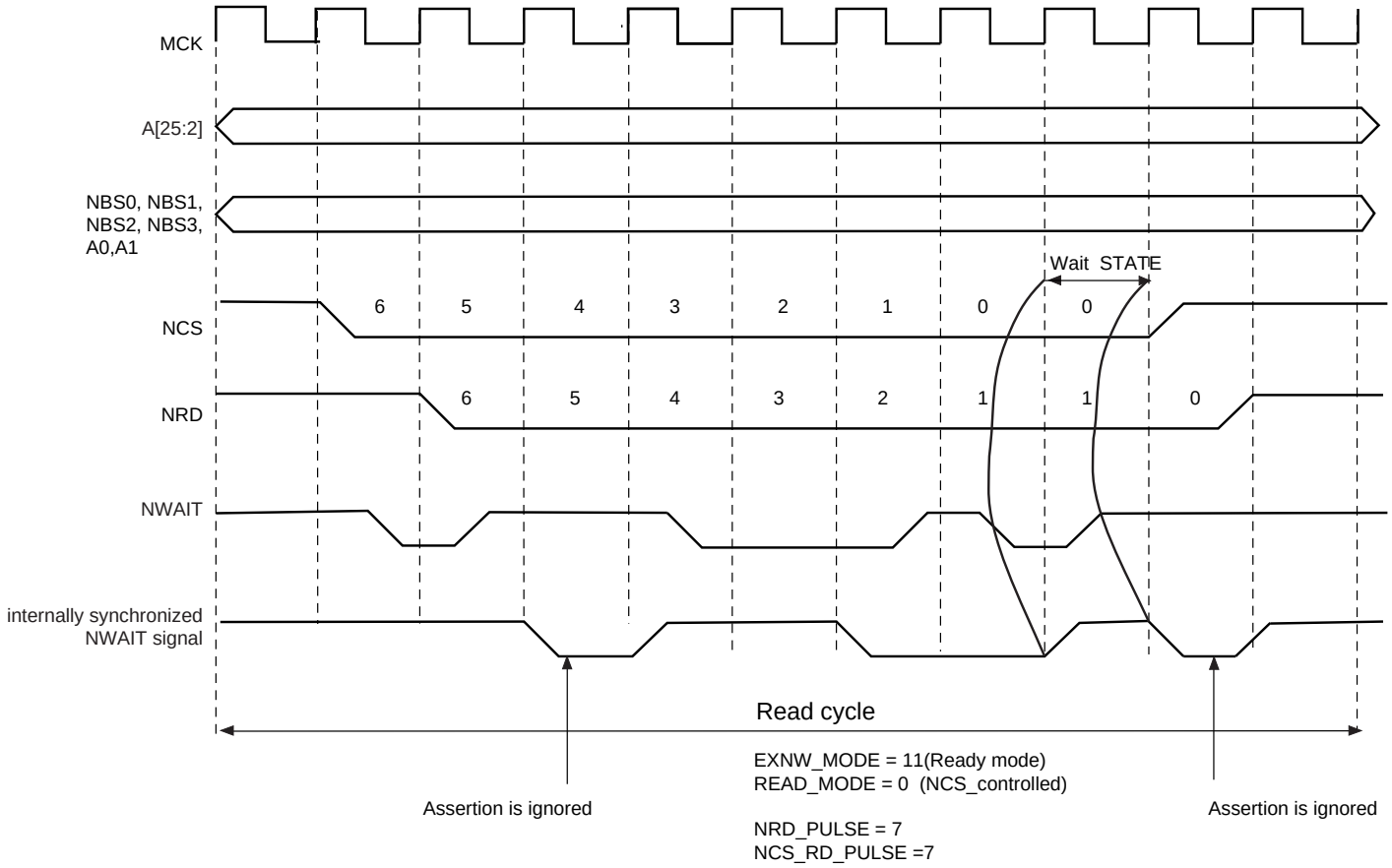

21.11.4 NWAIT Latency and Read/Write Timings

There may be a latency between the assertion of the read/write controlling signal and the assertion of the NWAIT signal by the device. The programmed pulse length of the read/write controlling signal must be at least equal to this latency plus the 2 cycles of resynchronization + 1 cycle. Otherwise, the SMC may enter the hold state of the access without detecting the NWAIT signal assertion. This is true in frozen mode as well as in ready mode. This is illustrated on Figure 21-30.

When EXNW_MODE is enabled (ready or frozen), the user must program a pulse length of the read and write controlling signal of at least:

minimal pulse length = NWAIT latency + 2 resynchronization cycles + 1 cycle

Figure 21-30. NWAIT Latency

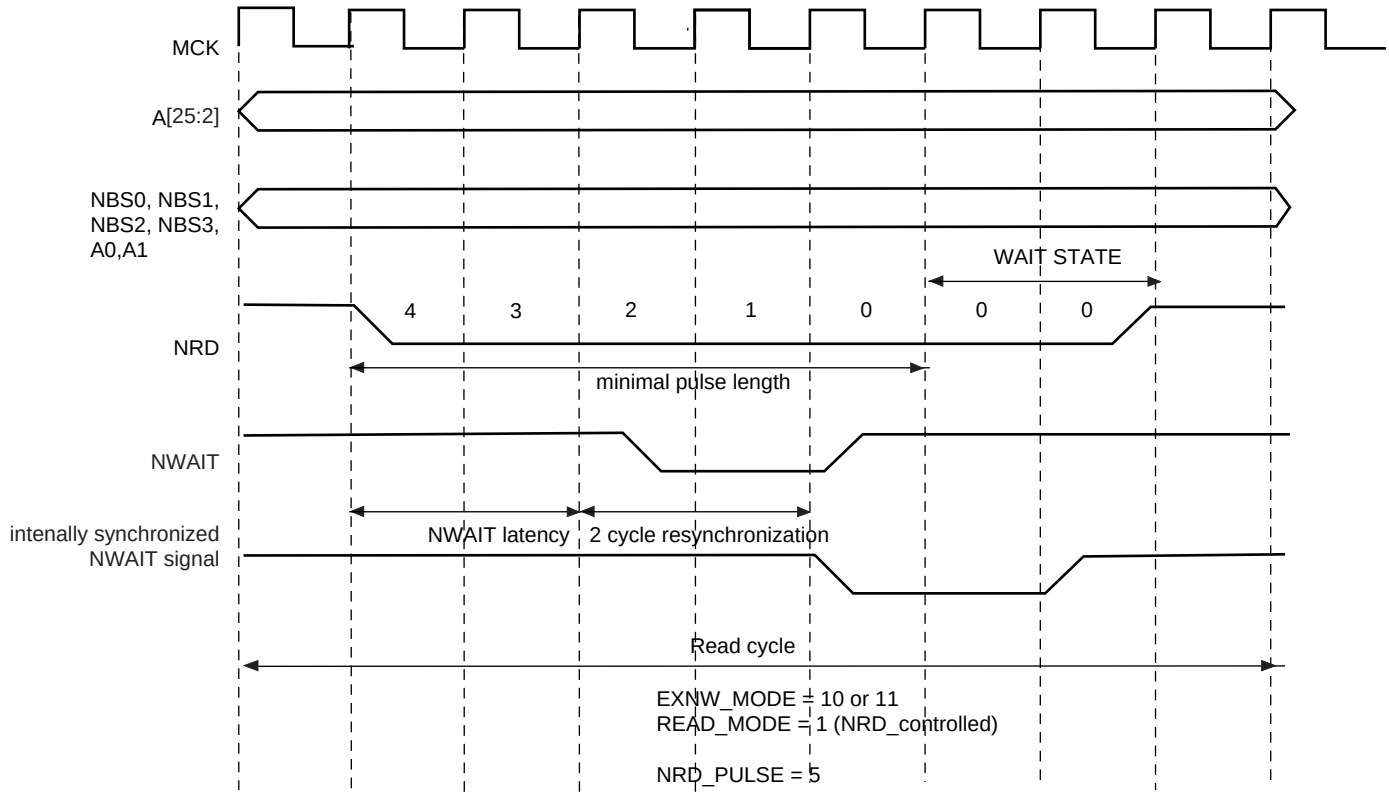

21.12 Slow Clock Mode

The SMC is able to automatically apply a set of “slow clock mode” read/write waveforms when an internal signal driven by the Power Management Controller is asserted because MCK has been turned to a very slow clock rate (typically 32 kHz clock rate). In this mode, the user-programmed waveforms are ignored and the slow clock mode waveforms are applied. This mode is provided so as to avoid reprogramming the User Interface with appropriate waveforms at very slow clock rate. When activated, the slow mode is active on all chip selects.

21.12.1 Slow Clock Mode Waveforms

Figure 21-31 illustrates the read and write operations in slow clock mode. They are valid on all chip selects. Table 21-5 indicates the value of read and write parameters in slow clock mode.

Figure 21-31. Read/write Cycles in Slow Clock Mode

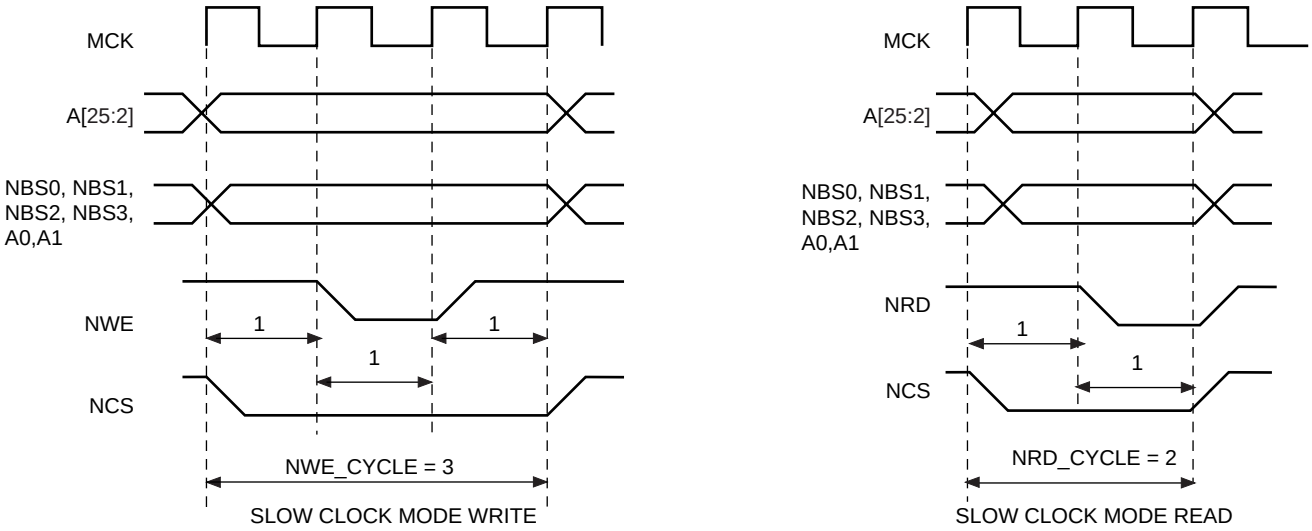

Table 21-5. Read and Write Timing Parameters in Slow Clock Mode

Read Parameters	Duration (cycles)	Write Parameters	Duration (cycles)
NRD_SETUP	1	NWE_SETUP	1
NRD_PULSE	1	NWE_PULSE	1
NCS_RD_SETUP	0	NCS_WR_SETUP	0
NCS_RD_PULSE	2	NCS_WR_PULSE	3
NRD_CYCLE	2	NWE_CYCLE	3

21.12.2 Switching from (to) Slow Clock Mode to (from) Normal Mode

When switching from slow clock mode to the normal mode, the current slow clock mode transfer is completed at high clock rate, with the set of slow clock mode parameters.See Figure 21-32 on page 212. The external device may not be fast enough to support such timings.

Figure 21-33 illustrates the recommended procedure to properly switch from one mode to the other.

Figure 21-32. Clock Rate Transition Occurs while the SMC is Performing a Write Operation

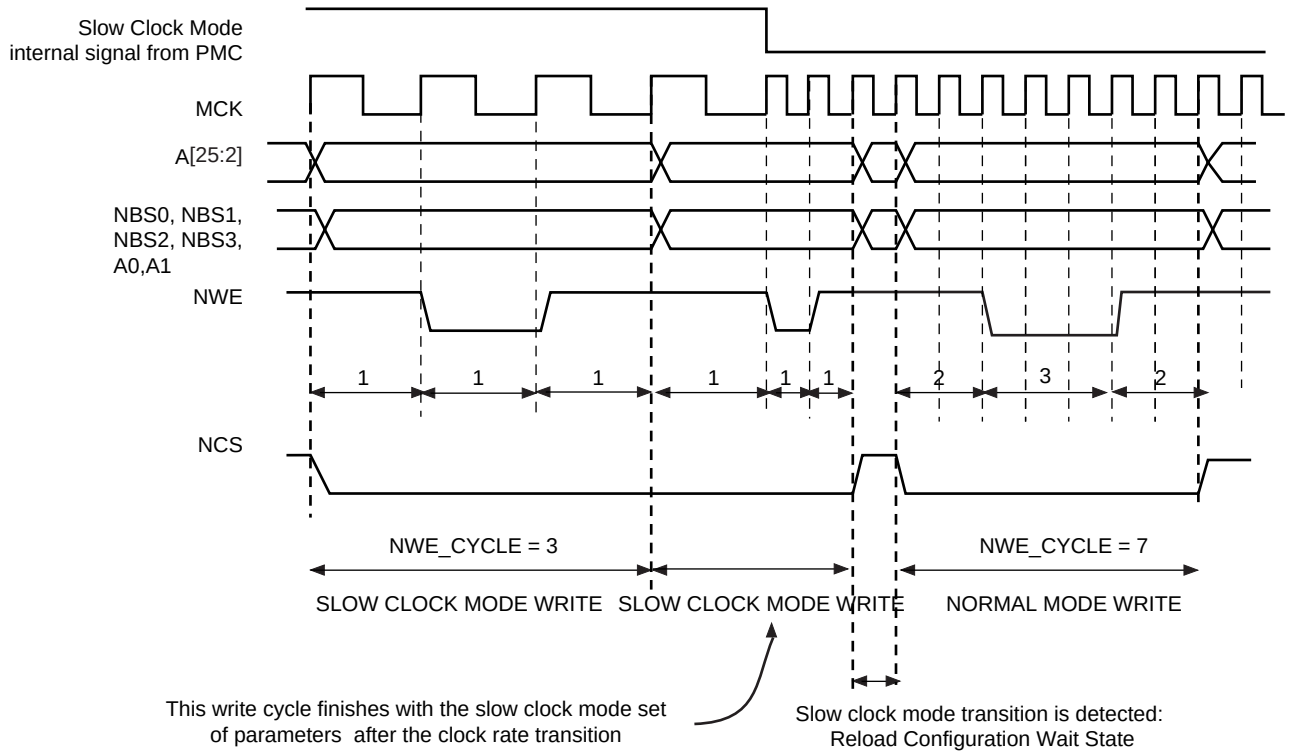

Figure 21-33. Recommended Procedure to Switch from Slow Clock Mode to Normal Mode or from Normal Mode to Slow Clock Mode

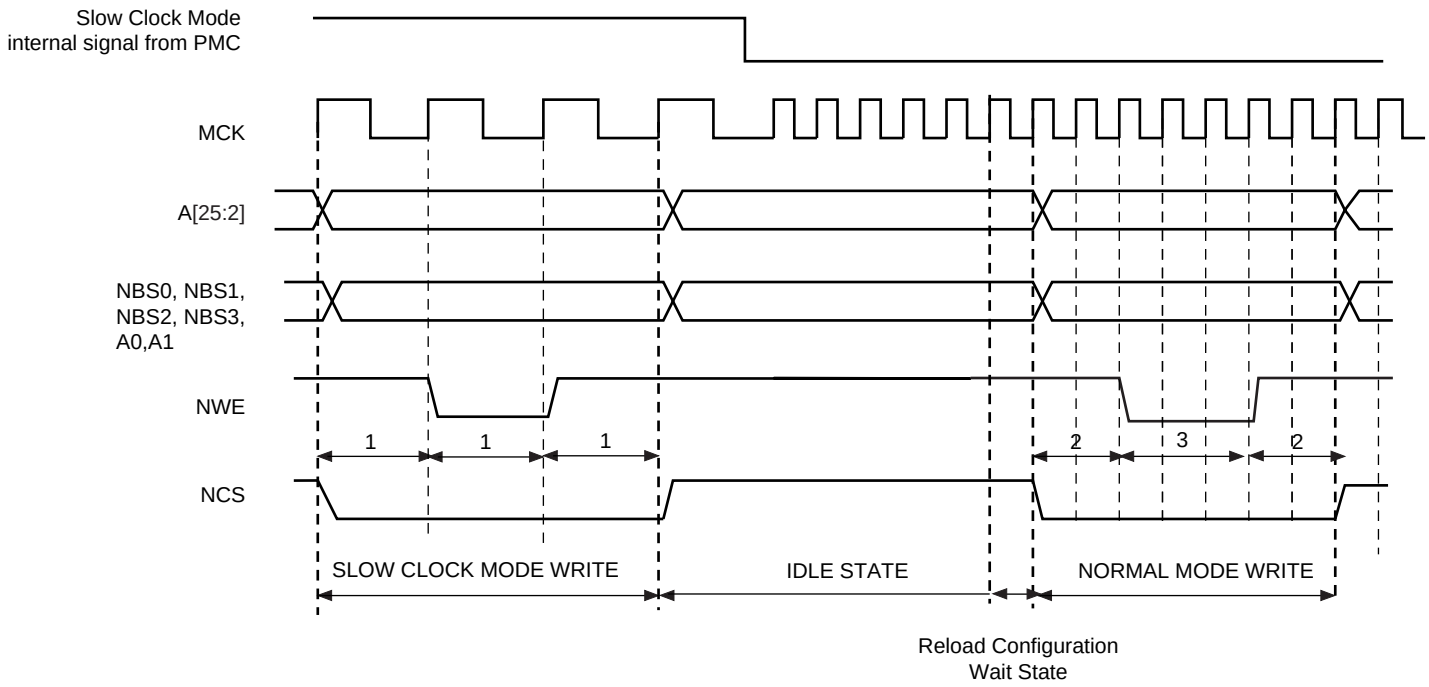

21.13 Asynchronous Page Mode

The SMC supports asynchronous burst reads in page mode, providing that the page mode is enabled in the SMC_MODE register (PMEN field). The page size must be configured in the SMC_MODE register (PS field) to 4, 8, 16 or 32 bytes.

The page defines a set of consecutive bytes into memory. A 4-byte page (resp. 8-, 16-, 32-byte page) is always aligned to 4-byte boundaries (resp. 8-, 16-, 32-byte boundaries) of memory. The MSB of data address defines the address of the page in memory, the LSB of address define the address of the data in the page as detailed in Table 21-6.

With page mode memory devices, the first access to one page (t_{pa}) takes longer than the subsequent accesses to the page (t_{sa}) as shown in Figure 21-34. When in page mode, the SMC enables the user to define different read timings for the first access within one page, and next accesses within the page.

Table 21-6. Page Address and Data Address within a Page

Page Size	Page Address(1)	Data Address in the Page(2)
4 bytes	A[25:2]	A[1:0]
8 bytes	A[25:3]	A[2:0]
16 bytes	A[25:4]	A[3:0]
32 bytes	A[25:5]	A[4:0]

Notes: 1. A denotes the address bus of the memory device
2. For 16-bit devices, the bit 0 of address is ignored. For 32-bit devices, bits [1:0] are ignored.

21.13.1 Protocol and Timings in Page Mode

Figure 21-34 shows the NRD and NCS timings in page mode access.

Figure 21-34. Page Mode Read Protocol (Address MSB and LSB are defined in Table 21-6)

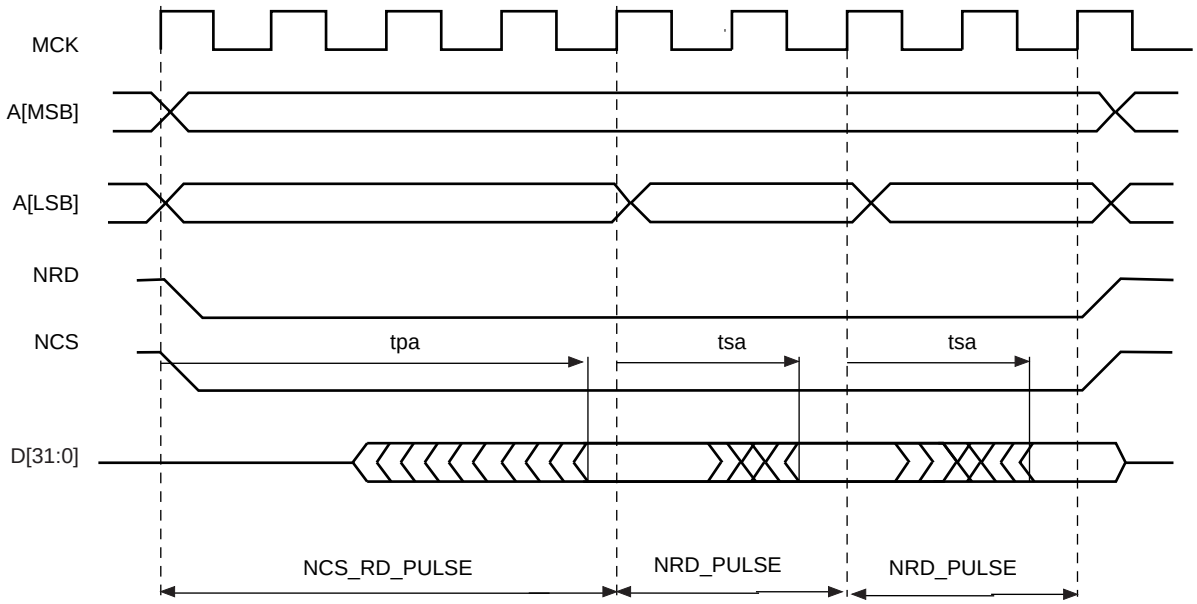

The NRD and NCS signals are held low during all read transfers, whatever the programmed values of the setup and hold timings in the User Interface may be. Moreover, the NRD and NCS timings are identical. The pulse length

of the first access to the page is defined with the NCS_RD_PULSE field of the SMC_PULSE register. The pulse length of subsequent accesses within the page are defined using the NRD_PULSE parameter.

In page mode, the programming of the read timings is described in Table 21-7:

Table 21-7. Programming of Read Timings in Page Mode

Parameter	Value	Definition
READ_MODE	'x'	No impact
NCS_RD_SETUP	'x'	No impact
NCS_RD_PULSE	t_{pa}	Access time of first access to the page
NRD_SETUP	'x'	No impact
NRD_PULSE	t_{sa}	Access time of subsequent accesses in the page
NRD_CYCLE	'x'	No impact

The SMC does not check the coherency of timings. It will always apply the NCS_RD_PULSE timings as page access timing (t_{pa}) and the NRD_PULSE for accesses to the page (t_{sa}), even if the programmed value for t_{pa} is shorter than the programmed value for t_{sa}.

21.13.2 Byte Access Type in Page Mode

The Byte Access Type configuration remains active in page mode. For 16-bit or 32-bit page mode devices that require byte selection signals, configure the BAT field of the SMC_REGISTER to 0 (byte select access type).

21.13.3 Page Mode Restriction

The page mode is not compatible with the use of the NWAIT signal. Using the page mode and the NWAIT signal may lead to unpredictable behavior.

21.13.4 Sequential and Non-sequential Accesses

If the chip select and the MSB of addresses as defined in Table 21-6 are identical, then the current access lies in the same page as the previous one, and no page break occurs.

Using this information, all data within the same page, sequential or not sequential, are accessed with a minimum access time (t_{sa}). Figure 21-35 illustrates access to an 8-bit memory device in page mode, with 8-byte pages. Access to D1 causes a page access with a long access time (t_{pa}). Accesses to D3 and D7, though they are not sequential accesses, only require a short access time (t_{sa}).

If the MSB of addresses are different, the SMC performs the access of a new page. In the same way, if the chip select is different from the previous access, a page break occurs. If two sequential accesses are made to the page mode memory, but separated by an other internal or external peripheral access, a page break occurs on the second access because the chip select of the device was deasserted between both accesses.

Figure 21-35. Access to Non-sequential Data within the Same Page

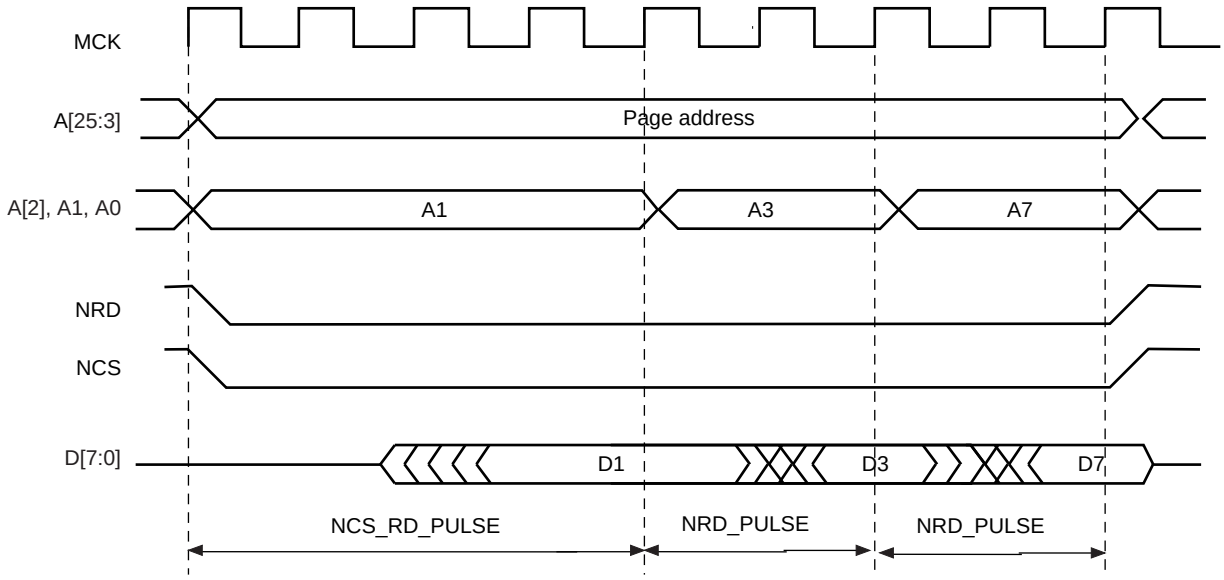

21.14 Programmable IO Delays

The external bus interface consists of a data bus, an address bus and control signals. The simultaneous switching outputs on these busses may lead to a peak of current in the internal and external power supply lines.

In order to reduce the peak of current in such cases, additional propagation delays can be adjusted independently for pad buffers by means of configuration registers, SMC_DELAY1-8.

The additional programmable delays for each IO range from 0 to 4 ns (Worst Case PVT). The delay can differ between IOs supporting this feature. Delay can be modified per programming for each IO. The minimal additional delay that can be programmed on a PAD suppporting this feature is 1/16 of the maximum programmable delay.

When programming 0x0 in fields “Delay1 to Delay 8”, no delay is added (reset value) and the propagation delay of the pad buffers is the inherent delay of the pad buffer. When programming 0xF in field “Delay1” the propagation delay of the corresponding pad is maximal.

SMC_DELAY1, SMC_DELAY2 allow to configure delay on D[15:0], SMC_DELAY1[3:0] corresponds to D[0] and SMC_DELAY2[3:0] corresponds to D[8].

SMC_DELAY3, SMC_DELAY4 allow to configure delay on D[31:16], SMC_DELAY3[3:0] corresponds to D[16] and SMC_DELAY4[3:0] corresponds to D[24]. In case of multiplexing through the PIO controller, refer to the alternate function of D[31:16].

SMC_DELAY5, 6, 7 and 8 allow to configure delay on A[25:0], SMC_DELAY5[3:0] corresponds to A[0]. In case of multiplexing through the PIO controller, refer to the alternate function of A[25:0].

Figure 21-36. Programmable IO Delays

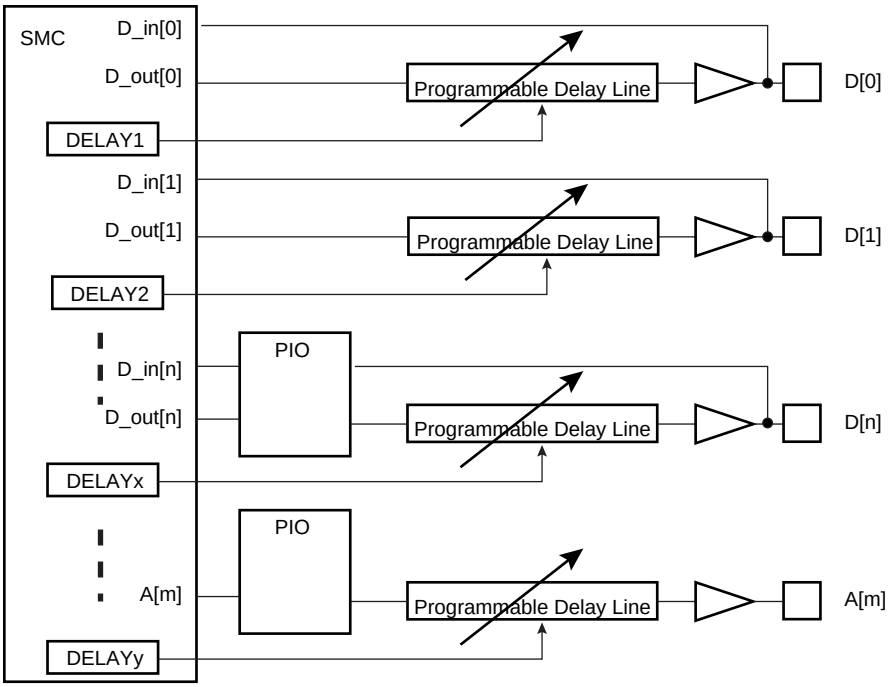

21.15 Static Memory Controller (SMC) User Interface

The SMC is programmed using the registers listed in Table 21-8. For each chip select, a set of 4 registers is used to program the parameters of the external device connected on it. In Table 21-8, “CS_number” denotes the chip select number. 16 bytes (0x10) are required per chip select.

The user must complete writing the configuration by writing any one of the SMC_MODE registers.

Table 21-8. Register Mapping

Offset	Register	Name	Access	Reset
0x10 x CS_number + 0x00	SMC Setup Register	SMC_SETUP	Read-write	0x01010101
0x10 x CS_number + 0x04	SMC Pulse Register	SMC_PULSE	Read-write	0x01010101
0x10 x CS_number + 0x08	SMC Cycle Register	SMC_CYCLE	Read-write	0x00030003
0x10 x CS_number + 0x0C	SMC Mode Register	SMC_MODE	Read-write	0x10001000
0xC0	SMC Delay on I/O	SMC_DELAY1	Read-write	0x00000000
0xC4	SMC Delay on I/O	SMC_DELAY2	Read-write	0x00000000
0xC8	SMC Delay on I/O	SMC_DELAY3	Read-write	0x00000000
0xCC	SMC Delay on I/O	SMC_DELAY4	Read-write	0x00000000
0xD0	SMC Delay on I/O	SMC_DELAY5	Read-write	0x00000000
0xD4	SMC Delay on I/O	SMC_DELAY6	Read-write	0x00000000
0xD8	SMC Delay on I/O	SMC_DELAY7	Read-write	0x00000000
0xDC	SMC Delay on I/O	SMC_DELAY8	Read-write	0x00000000
0xEC-0xFC	Reserved	-	-	-

21.15.1 SMC Setup Register

Register Name: SMC_SETUP[0..5]

Addresses: 0xFFFFE800 [0], 0xFFFFE810 [1], 0xFFFFE820 [2], 0xFFFFE830 [3], 0xFFFFE840 [4], 0xFFFFE850 [5]

Access Type: Read-write

31	30	29	28	27	26	25	24
–	–	NCS_RD_SETUP					

23	22	21	20	19	18	17	16
–	–	NRD_SETUP					

15	14	13	12	11	10	9	8
–	–	NCS_WR_SETUP					

7	6	5	4	3	2	1	0
–	–	NWE_SETUP					

- **NWE_SETUP: NWE Setup Length**

The NWE signal setup length is defined as:

NWE setup length = (128* NWE_SETUP[5] + NWE_SETUP[4:0]) clock cycles

- **NCS_WR_SETUP: NCS Setup Length in WRITE Access**

In write access, the NCS signal setup length is defined as:

NCS setup length = (128* NCS_WR_SETUP[5] + NCS_WR_SETUP[4:0]) clock cycles

- **NRD_SETUP: NRD Setup Length**

The NRD signal setup length is defined in clock cycles as:

NRD setup length = (128* NRD_SETUP[5] + NRD_SETUP[4:0]) clock cycles

- **NCS_RD_SETUP: NCS Setup Length in READ Access**

In read access, the NCS signal setup length is defined as:

NCS setup length = (128* NCS_RD_SETUP[5] + NCS_RD_SETUP[4:0]) clock cycles

21.15.2 SMC Pulse Register

Register Name: SMC_PULSE[0..5]

Addresses: 0xFFFFE804 [0], 0xFFFFE814 [1], 0xFFFFE824 [2], 0xFFFFE834 [3], 0xFFFFE844 [4], 0xFFFFE854 [5]

Access Type: Read-write

31	30	29	28	27	26	25	24
–	NCS_RD_PULSE						

23	22	21	20	19	18	17	16
–	NRD_PULSE						

15	14	13	12	11	10	9	8
–	NCS_WR_PULSE						

7	6	5	4	3	2	1	0
–	NWE_PULSE						

- **NWE_PULSE: NWE Pulse Length**

The NWE signal pulse length is defined as:

NWE pulse length = (256* NWE_PULSE[6] + NWE_PULSE[5:0]) clock cycles

The NWE pulse length must be at least 1 clock cycle.

- **NCS_WR_PULSE: NCS Pulse Length in WRITE Access**

In write access, the NCS signal pulse length is defined as:

NCS pulse length = (256* NCS_WR_PULSE[6] + NCS_WR_PULSE[5:0]) clock cycles

The NCS pulse length must be at least 1 clock cycle.

- **NRD_PULSE: NRD Pulse Length**

In standard read access, the NRD signal pulse length is defined in clock cycles as:

NRD pulse length = (256* NRD_PULSE[6] + NRD_PULSE[5:0]) clock cycles

The NRD pulse length must be at least 1 clock cycle.

In page mode read access, the NRD_PULSE parameter defines the duration of the subsequent accesses in the page.

- **NCS_RD_PULSE: NCS Pulse Length in READ Access**

In standard read access, the NCS signal pulse length is defined as:

NCS pulse length = (256* NCS_RD_PULSE[6] + NCS_RD_PULSE[5:0]) clock cycles

The NCS pulse length must be at least 1 clock cycle.

In page mode read access, the NCS_RD_PULSE parameter defines the duration of the first access to one page.

21.15.3 SMC Cycle Register

Register Name: SMC_CYCLE[0..5]

Addresses: 0xFFFFE808 [0], 0xFFFFE818 [1], 0xFFFFE828 [2], 0xFFFFE838 [3], 0xFFFFE848 [4], 0xFFFFE858 [5]

Access Type: Read-write

31	30	29	28	27	26	25	24
–	–	–	–	–	–	–	NRD_CYCLE

23	22	21	20	19	18	17	16
NRD_CYCLE							

15	14	13	12	11	10	9	8
–	–	–	–	–	–	–	NWE_CYCLE

7	6	5	4	3	2	1	0
NWE_CYCLE							

- **NWE_CYCLE: Total Write Cycle Length**

The total write cycle length is the total duration in clock cycles of the write cycle. It is equal to the sum of the setup, pulse and hold steps of the NWE and NCS signals. It is defined as:

Write cycle length = (NWE_CYCLE[8:7]*256 + NWE_CYCLE[6:0]) clock cycles

- **NRD_CYCLE: Total Read Cycle Length**

The total read cycle length is the total duration in clock cycles of the read cycle. It is equal to the sum of the setup, pulse and hold steps of the NRD and NCS signals. It is defined as:

Read cycle length = (NRD_CYCLE[8:7]*256 + NRD_CYCLE[6:0]) clock cycles

21.15.4 SMC MODE Register

Register Name: SMC_MODE[0..5]

Addresses: 0xFFFFE80C [0], 0xFFFFE81C [1], 0xFFFFE82C [2], 0xFFFFE83C [3], 0xFFFFE84C [4], 0xFFFFE85C [5]

Access Type: Read-write

31	30	29	28	27	26	25	24
–	–	PS		–	–	–	PMEN

23	22	21	20	19	18	17	16
–	–	–	TDF_MODE	TDF_CYCLES			

15	14	13	12	11	10	9	8
–	–	DBW		–	–	–	BAT

7	6	5	4	3	2	1	0
–	–	EXNW_MODE		–	–	WRITE_MODE	READ_MODE

- **READ_MODE:**

1: The read operation is controlled by the NRD signal.

  – If TDF cycles are programmed, the external bus is marked busy after the rising edge of NRD.

  – If TDF optimization is enabled (TDF_MODE =1), TDF wait states are inserted after the setup of NRD.

0: The read operation is controlled by the NCS signal.

  – If TDF cycles are programmed, the external bus is marked busy after the rising edge of NCS.

  – If TDF optimization is enabled (TDF_MODE =1), TDF wait states are inserted after the setup of NCS.

- **WRITE_MODE**

1: The write operation is controlled by the NWE signal.

  – If TDF optimization is enabled (TDF_MODE =1), TDF wait states will be inserted after the setup of NWE.

0: The write operation is controlled by the NCS signal.

  – If TDF optimization is enabled (TDF_MODE =1), TDF wait states will be inserted after the setup of NCS.

- **EXNW_MODE: NWAIT Mode**

The NWAIT signal is used to extend the current read or write signal. It is only taken into account during the pulse phase of the read and write controlling signal. When the use of NWAIT is enabled, at least one cycle hold duration must be programmed for the read and write controlling signal.

EXNW_MODE		NWAIT Mode
0	0	Disabled
0	1	Reserved
1	0	Frozen Mode
1	1	Ready Mode

- Disabled Mode: The NWAIT input signal is ignored on the corresponding Chip Select.
- Frozen Mode: If asserted, the NWAIT signal freezes the current read or write cycle. After deassertion, the read/write cycle is resumed from the point where it was stopped.

- Ready Mode: The NWAIT signal indicates the availability of the external device at the end of the pulse of the controlling read or write signal, to complete the access. If high, the access normally completes. If low, the access is extended until NWAIT returns high.

- **BAT: Byte Access Type**

This field is used only if DBW defines a 16- or 32-bit data bus.

- 1: Byte write access type:
  - Write operation is controlled using NCS, NWR0, NWR1, NWR2, NWR3.
  - Read operation is controlled using NCS and NRD.
- 0: Byte select access type:
  - Write operation is controlled using NCS, NWE, NBS0, NBS1, NBS2 and NBS3
  - Read operation is controlled using NCS, NRD, NBS0, NBS1, NBS2 and NBS3

- **DBW: Data Bus Width**

DBW		Data Bus Width
0	0	8-bit bus
0	1	16-bit bus
1	0	32-bit bus
1	1	Reserved

- **TDF_CYCLES: Data Float Time**

This field gives the integer number of clock cycles required by the external device to release the data after the rising edge of the read controlling signal. The SMC always provide one full cycle of bus turnaround after the TDF_CYCLES period. The external bus cannot be used by another chip select during TDF_CYCLES + 1 cycles. From 0 up to 15 TDF_CYCLES can be set.

- **TDF_MODE: TDF Optimization**

1: TDF optimization is enabled.

- The number of TDF wait states is optimized using the setup period of the next read/write access.

0: TDF optimization is disabled.

- The number of TDF wait states is inserted before the next access begins.

- **PMEN: Page Mode Enabled**

1: Asynchronous burst read in page mode is applied on the corresponding chip select.

0: Standard read is applied.

- **PS: Page Size**

If page mode is enabled, this field indicates the size of the page in bytes.

PS		Page Size
0	0	4-byte page
0	1	8-byte page
1	0	16-byte page
1	1	32-byte page

21.15.5 SMC DELAY I/O Register

Register Name: SMC_DELAY 1-8

Addresses: 0xFFFFE8C0 [1], 0xFFFFE8C4 [2], 0xFFFFE8C8 [3], 0xFFFFE8CC [4], 0xFFFFE8D0 [5], 0xFFFFE8D4 [6], 0xFFFFE8D8 [7], 0xFFFFE8DC [8]

Access Type: Read-write

Reset Value: See Table 21-8

31	30	29	28	27	26	25	24
Delay8				Delay7			

23	22	21	20	19	18	17	16
Delay6				Delay5			

15	14	13	12	11	10	9	8
Delay4				Delay3			

7	6	5	4	3	2	1	0
Delay2				Delay1			

- **Delay x:**

Gives the number of elements in the delay line.

22. SDR SDRAM Controller (DDRSDRC)

22.1 Description

The DDR SDR SDRAM Controller (DDRSDRC) is a multiport memory controller. It comprises four slave AHB interfaces. All simultaneous accesses (four independent AHB ports) are interleaved to maximize memory bandwidth and minimize transaction latency due to SDRAM protocol**.**

The DDRSDRC extends the memory capabilities of a chip by providing the interface to an external 16-bit or 32-bit SDR-SDRAM device and external 16-bit DDR-SDRAM device. The page size supports ranges from 2048 to 16384 and the number of columns from 256 to 4096. It supports byte (8-bit), half-word (16-bit) and word (32-bit) accesses.

The DDRSDRC supports a read or write burst length of 8 locations which frees the command and address bus to anticipate the next command, thus reducing latency imposed by the SDRAM protocol and improving the SDRAM bandwidth. Moreover it keeps track of the active row in each bank, thus maximizing SDRAM performance, e.g., the application may be placed in one bank and data in the other banks. So as to optimize performance, it is advisable to avoid accessing different rows in the same bank. The DDRSDRC supports a CAS latency of 2 or 3 and optimizes the read access depending on the frequency.

The features of self refresh, power-down and deep power-down modes minimize the consumption of the SDRAM device.

The DDRSDRC user interface is compliant with ARM Advanced Peripheral Bus (APB rev2).

Note: Note: The term “SDRAM device” regroups SDR-SDRAM, Low-power SDR-SDRAM, Low-power DDR1-SDRAM and DDR2-SDRAM devices.

22.2 Embedded Characteristics

- AMBA Compliant Interface, interfaces Directly to the ARM Advanced High performance Bus (AHB)
  - Four AHB Interfaces, Management of All Accesses Maximizes Memory Bandwidth and Minimizes Transaction Latency
  - AHB Transfer: Word, Half Word, Byte Access
- Supports DDR2-SDRAM, Low-power DDR1-SDRAM or DDR2-SDRAM, SDR-SDRAM and Low-power SDR-SDRAM
- Numerous Configurations Supported
  - 2K, 4K, 8K, 16K Row Address Memory Parts
  - SDRAM with Four Internal Banks
  - SDR-SDRAM with 16- or 32-bit Data Path
  - DDR-SDRAM with 16-bit Data Path
  - One Chip Select for SDRAM Device (256 Mbyte Address Space)
- Programming Facilities
  - Multibank Ping-pong Access (Up to or 4 Banks Opened at Same Time = Reduces Average Latency of Transactions)
  - Timing Parameters Specified by Software
  - Automatic Refresh Operation, Refresh Rate is Programmable
  - Automatic Update of DS, TCR and PASR Parameters (Low-power SDRAM Devices)
- Energy-saving Capabilities
  - Self-refresh, Power-down, Active Power-down and Deep Power-down Modes Supported
- SDRAM Power-up Initialization by Software
- CAS Latency of 2, 3 Supported
- Reset Function Supported (DDR2-SDRAM)
- ODT (On-die Termination) Not Supported
- Auto Precharge Command Not Used
- SDR-SDRAM with 16-bit Datapath and Eight Columns Not Supported
- DDR2-SDRAM with Eight Internal Banks Not Supported
- SDR-SDRAM or Low-power DDR1-SDRAM with 2 Internal Banks Not Supported
- Clock Frequency Change in Precharge Power-down Mode Not Supported
- OCD (Off-chip Driver) Mode Not Supported

22.3 DDRSDRC Module Diagram

Figure 22-1. DDRSDRC Module Diagram

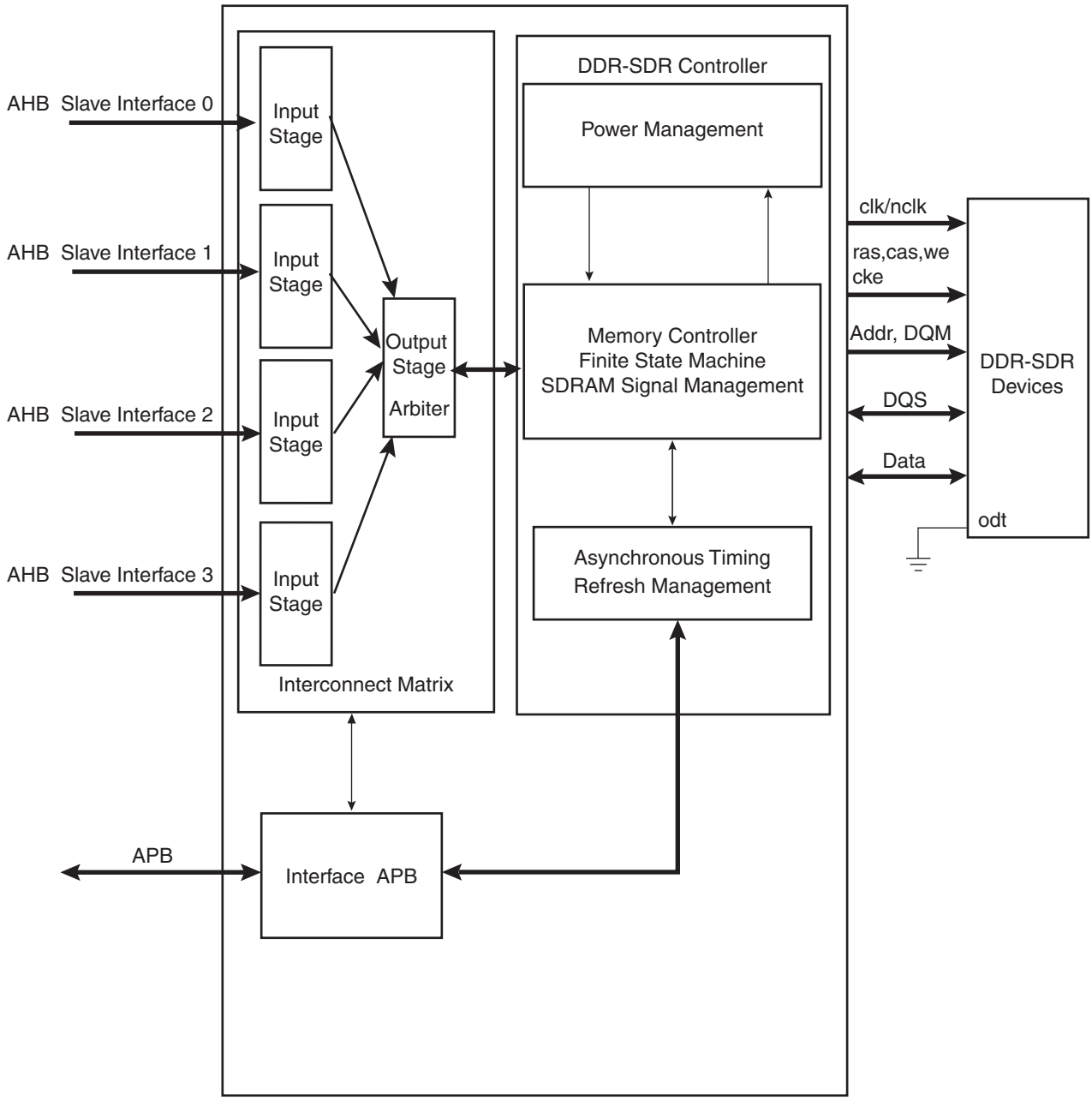

DDRSDRC is partitioned in two blocks (see Figure 22-1):

- An Interconnect-Matrix that manages concurrent accesses on the AHB bus between four AHB masters and integrates an arbiter.
- A controller that translates AHB requests (Read/Write) in the SDRAM protocol.

22.4 Initialization Sequence

The addresses given are for example purposes only. The real address depends on implementation in the product.

22.4.1 SDR-SDRAM Initialization

The initialization sequence is generated by software. The SDR-SDRAM devices are initialized by the following sequence:

1. Program the memory device type into the Memory Device Register (see Section 22.8.8 on page 265).
2. Program the features of the SDR-SDRAM device into the Timing Register (asynchronous timing (trc, tras, etc.)), and into the Configuration Register (number of columns, rows, cas latency) (see Section 22.8.3 on page 256, Section 22.8.4 on page 259 and Section 22.8.5 on page 261).
3. For low-power SDRAM, temperature-compensated self refresh (TCSR), drive strength (DS) and partial array self refresh (PASR) must be set in the Low-power Register (see Section 22.8.7 on page 263).

A minimum pause of 200 µs is provided to precede any signal toggle.

4. A NOP command is issued to the SDR-SDRAM. Program NOP command into Mode Register, the application must set Mode to 1 in the Mode Register (See Section 22.8.1 on page 254). Perform a write access to any SDR-SDRAM address to acknowledge this command. Now the clock which drives SDR-SDRAM device is enabled.
5. An all banks precharge command is issued to the SDR-SDRAM. Program all banks precharge command into Mode Register, the application must set Mode to 2 in the Mode Register (See Section 22.8.1 on page 254). Perform a write access to any SDR-SDRAM address to acknowledge this command.
6. Eight auto-refresh (CBR) cycles are provided. Program the auto refresh command (CBR) into Mode Register, the application must set Mode to 4 in the Mode Register (see Section 22.8.1 on page 254).Performs a write access to any SDR-SDRAM location eight times to acknowledge these commands.
7. A Mode Register set (MRS) cycle is issued to program the parameters of the SDR-SDRAM devices, in particular CAS latency and burst length. The application must set Mode to 3 in the Mode Register (see Section 22.8.1 on page 254) and perform a write access to the SDR-SDRAM to acknowledge this command. The write address must be chosen so that BA[1:0] are set to 0. For example, with a 16-bit 128 MB SDR-SDRAM (12 rows, 9 columns, 4 banks) bank address, the SDRAM write access should be done at the address 0x20000000.

Note: This address is for example purposes only. The real address is dependent on implementation in the product.

8. For low-power SDR-SDRAM initialization, an Extended Mode Register set (EMRS) cycle is issued to program the SDR-SDRAM parameters (TCSR, PASR, DS). The application must set Mode to 5 in the Mode Register (see Section 22.8.1 on page 254) and perform a write access to the SDR-SDRAM to acknowledge this command. The write address must be chosen so that BA[1] is set to 1 and BA[0] is set to 0. For example, with a 16-bit 128 MB SDRAM, (12 rows, 9 columns, 4 banks) bank address the SDRAM write access should be done at the address 0x20800000.
9. The application must go into Normal Mode, setting Mode to 0 in the Mode Register (see Section 22.8.1 on page 254) and perform a write access at any location in the SDRAM to acknowledge this command.
10. Write the refresh rate into the count field in the DDRSDRC Refresh Timer register (see page 255). (Refresh rate = delay between refresh cycles). The SDR-SDRAM device requires a refresh every 15.625 µs or 7.81 µs. With a 100 MHz frequency, the refresh timer count register must to be set with (15.625*100 MHz) = 1562 i.e. 0x061A or (7.81*100 MHz) = 781 i.e. 0x030d

After initialization, the SDR-SDRAM device is fully functional.

22.4.2 Low-power DDR1-SDRAM Initialization

The initialization sequence is generated by software. The low-power DDR1-SDRAM devices are initialized by the following sequence:

1. Program the memory device type into the Memory Device Register (see Section 22.8.8 on page 265).
2. Program the features of the low-power DDR1-SDRAM device into the Configuration Register: asynchronous timing (trc, tras, etc.), number of columns, rows, cas latency. See Section 22.8.3 on page 256, Section 22.8.4 on page 259 and Section 22.8.5 on page 261.
3. Program temperature compensated self refresh (tcr), Partial array self refresh (pasr) and Drive strength (ds) into the Low-power Register. See Section 22.8.7 on page 263.
4. An NOP command will be issued to the low-power DDR1-SDRAM. Program NOP command into the Mode Register, the application must set Mode to 1 in the Mode Register (see Section 22.8.1 on page 254). Perform a write access to any DDR1-SDRAM address to acknowledge this command. Now clocks which drive DDR1-SDRAM device are enabled.

A minimum pause of 200 µs will be provided to precede any signal toggle.

5. An all banks precharge command is issued to the low-power DDR1-SDRAM. Program all banks precharge command into the Mode Register, the application must set Mode to 2 in the Mode Register (See Section 22.8.1 on page 254). Perform a write access to any low-power DDR1-SDRAM address to acknowledge this command
6. Two auto-refresh (CBR) cycles are provided. Program the auto refresh command (CBR) into the Mode Register, the application must set Mode to 4 in the Mode Register (see Section 22.8.1 on page 254). Perform a write access to any low-power DDR1-SDRAM location twice to acknowledge these commands.
7. An Extended Mode Register set (EMRS) cycle is issued to program the low-power DDR1-SDRAM parameters (TCSR, PASR, DS). The application must set Mode to 5 in the Mode Register (see Section 22.8.1 on page 254) and perform a write access to the SDRAM to acknowledge this command. The write address must be chosen so that BA[1] is set to 1 BA[0] is set to 0. For example, with a 16-bit 128 MB SDRAM (12 rows, 9 columns, 4 banks) bank address, the low-power DDR1-SDRAM write access should be done at address 0x20800000.

Note: This address is for example purposes only. The real address is dependent on implementation in the product.

8. A Mode Register set (MRS) cycle is issued to program the parameters of the low-power DDR1-SDRAM devices, in particular CAS latency, burst length. The application must set Mode to 3 in the Mode Register (see Section 22.8.1 on page 254) and perform a write access to the low-power DDR1-SDRAM to acknowledge this command. The write address must be chosen so that BA[1:0] bits are set to 0. For example, with a 16-bit 128 MB low-power DDR1-SDRAM (12 rows, 9 columns, 4 banks) bank address, the SDRAM write access should be done at the address 0x20000000. The application must go into Normal Mode, setting Mode to 0 in the Mode Register (see Section 22.8.1 on page 254) and performing a write access at any location in the low-power DDR1-SDRAM to acknowledge this command.
9. Perform a write access to any low-power DDR1-SDRAM address.
10. Write the refresh rate into the count field in the DDRSDRC Refresh Timer register (see page 255). (Refresh rate = delay between refresh cycles). The low-power DDR1-SDRAM device requires a refresh every 15.625 µs or 7.81 µs. With a 100 MHz frequency, the refresh timer count register must to be set with (15.625*100 MHz) = 1562 i.e. 0x061A or (7.81*100 MHz) = 781 i.e. 0x030d
11. After initialization, the low-power DDR1-SDRAM device is fully functional.

22.4.3 DDR2-SDRAM Initialization

The initialization sequence is generated by software. The DDR2-SDRAM devices are initialized by the following sequence:

1. Program the memory device type into the Memory Device Register (see Section 22.8.8 on page 265).
2. Program the features of DDR2-SDRAM device into the Timing Register (asynchronous timing (trc, tras, etc.)), and into the Configuration Register (number of columns, rows, cas latency and output drive strength) (see Section 22.8.3 on page 256, Section 22.8.4 on page 259 and Section 22.8.5 on page 261).
3. An NOP command is issued to the DDR2-SDRAM. Program the NOP command into the Mode Register, the application must set Mode to 1 in the Mode Register (see Section 22.8.1 on page 254). Perform a write access to any DDR2-SDRAM address to acknowledge this command. Now clocks which drive DDR2-SDRAM device are enabled.

A minimum pause of 200 µs is provided to precede any signal toggle.

4. An NOP command is issued to the DDR2-SDRAM. Program the NOP command into the Mode Register, the application must set Mode to 1 in the Mode Register (see Section 22.8.1 on page 254). Perform a write access to any DDR2-SDRAM address to acknowledge this command. Now CKE is driven high.
5. An all banks precharge command is issued to the DDR2-SDRAM. Program all banks precharge command into the Mode Register, the application must set Mode to 2 in the Mode Register (See Section 22.8.1 on page 254). Perform a write access to any DDR2-SDRAM address to acknowledge this command
6. An Extended Mode Register set (EMRS2) cycle is issued to chose between commercial or high temperature operations. The application must set Mode to 5 in the Mode Register (see Section 22.8.1 on page 254) and perform a write access to the DDR2-SDRAM to acknowledge this command. The write address must be chosen so that BA[1] is set to 1 and BA[0] is set to 0. For example, with a 16-bit 128 MB DDR2-SDRAM (12 rows, 9 columns, 4 banks) bank address, the DDR2-SDRAM write access should be done at the address 0x20800000.

Note: This address is for example purposes only. The real address is dependent on implementation in the product.

7. An Extended Mode Register set (EMRS3) cycle is issued to set the Extended Mode Register to “0”. The application must set Mode to 5 in the Mode Register (see Section 22.8.1 on page 254) and perform a write access to the DDR2-SDRAM to acknowledge this command. The write address must be chosen so that BA[1] is set to 1 and BA[0] is set to 1. For example, with a 16-bit 128 MB DDR2-SDRAM (12 rows, 9 columns, 4 banks) bank address, the DDR2-SDRAM write access should be done at the address 0x20C00000.
8. An Extended Mode Register set (EMRS1) cycle is issued to enable DLL. The application must set Mode to 5 in the Mode Register (see Section 22.8.1 on page 254) and perform a write access to the DDR2-SDRAM to acknowledge this command. The write address must be chosen so that BA[1] is set to 0 and BA[0] is set to 1. For example, with a 16-bit 128 MB DDR2-SDRAM (12 rows, 9 columns, 4 banks) bank address, the DDR2-SDRAM write access should be done at the address 0x20400000.

An additional 200 cycles of clock are required for locking DLL

9. Program DLL field into the Configuration Register (see Section 22.8.3 on page 256) to high (Enable DLL reset).
10. A Mode Register set (MRS) cycle is issued to reset DLL. The application must set Mode to 3 in the Mode Register (see Section 22.8.1 on page 254) and perform a write access to the DDR2-SDRAM to acknowledge this command. The write address must be chosen so that BA[1:0] bits are set to 0. For example, with a 16-bit 128 MB DDR2-SDRAM (12 rows, 9 columns, 4 banks) bank address, the SDRAM write access should be done at the address 0x20000000.
11. An all banks precharge command is issued to the DDR2-SDRAM. Program all banks precharge command into the Mode Register, the application must set Mode to 2 in the Mode Register (See Section 22.8.1 on page 254). Perform a write access to any DDR2-SDRAM address to acknowledge this command
12. Two auto-refresh (CBR) cycles are provided. Program the auto refresh command (CBR) into the Mode Register, the application must set Mode to 4 in the Mode Register (see Section 22.8.1 on page 254). Performs a write access to any DDR2-SDRAM location twice to acknowledge these commands.

13. Program DLL field into the Configuration Register (see Section 22.8.3 on page 256) to low (Disable DLL reset).
14. A Mode Register set (MRS) cycle is issued to program the parameters of the DDR2-SDRAM devices, in particular CAS latency, burst length and to disable DLL reset. The application must set Mode to 3 in the Mode Register (see Section 22.8.1 on page 254) and perform a write access to the DDR2-SDRAM to acknowledge this command. The write address must be chosen so that BA[1:0] are set to 0. For example, with a 16-bit 128 MB SDRAM (12 rows, 9 columns, 4 banks) bank address, the SDRAM write access should be done at the address 0x20000000
15. Program OCD field into the Configuration Register (see Section 22.8.3 on page 256) to high (OCD calibration default).
16. An Extended Mode Register set (EMRS1) cycle is issued to OCD default value. The application must set Mode to 5 in the Mode Register (see Section 22.8.1 on page 254) and perform a write access to the DDR2-SDRAM to acknowledge this command. The write address must be chosen so that BA[1] is set to 0 and BA[0] is set to 1. For example, with a 16-bit 128 MB DDR2-SDRAM (12 rows, 9 columns, 4 banks) bank address, the DDR2-SDRAM write access should be done at the address 0x20400000.
17. Program OCD field into the Configuration Register (see Section 22.8.3 on page 256) to low (OCD calibration mode exit).
18. An Extended Mode Register set (EMRS1) cycle is issued to enable OCD exit. The application must set Mode to 5 in the Mode Register (see Section 22.8.1 on page 254) and perform a write access to the DDR2-SDRAM to acknowledge this command. The write address must be chosen so that BA[1] is set to 0 and BA[0] is set to 1. For example, with a 16-bit 128 MB DDR2-SDRAM (12 rows, 9 columns, 4 banks) bank address, the DDR2-SDRAM write access should be done at the address 0x20400000.
19. A mode Normal command is provided. Program the Normal mode into Mode Register (see Section 22.8.1 on page 254). Perform a write access to any DDR2-SDRAM address to acknowledge this command.
20. Perform a write access to any DDR2-SDRAM address.
21. Write the refresh rate into the count field in the Refresh Timer register (see page 255). (Refresh rate = delay between refresh cycles). The DDR2-SDRAM device requires a refresh every 15.625 µs or 7.81 µs. With a 133 MHz frequency, the refresh timer count register must to be set with (15.625*133 MHz) = 2079 i.e. 0x081f or (7.81*133 MHz) = 1039 i.e. 0x040f.

After initialization, the DDR2-SDRAM devices are fully functional.

22.5 Functional Description

22.5.1 SDRAM Controller Write Cycle

The DDRSDRC allows burst access or single access in normal mode (mode = 000). Whatever the access type, the DDRSDRC keeps track of the active row in each bank, thus maximizing performance.

The SDRAM device is programmed with a burst length equal to 8. This determines the length of a sequential data input by the write command that is set to 8. The latency from write command to data input is fixed to 1 in the case of DDR-SDRAM devices. In the case of SDR-SDRAM devices, there is no latency from write command to data input.

To initiate a single access, the DDRSDRC checks if the page access is already open. If row/bank addresses match with the previous row/bank addresses, the controller generates a write command. If the bank addresses are not identical or if bank addresses are identical but the row addresses are not identical, the controller generates a pre-charge command, activates the new row and initiates a write command. To comply with SDRAM timing parameters, additional clock cycles are inserted between precharge/active (t RP) commands and active/write (t RCD) command. As the burst length is fixed to 8, in the case of single access, it has to stop the burst, otherwise seven invalid values may be written. In the case of SDR-SDRAM devices, a Burst Stop command is generated to interrupt the write operation. In the case of DDR-SDRAM devices, Burst Stop command is not supported for the burst write operation. In order to then interrupt the write operation, Dm must be set to 1 to mask invalid data (see Figure 22-2 on page 233 and Figure 22-5 on page 234) and DQS must continue to toggle.

To initiate a burst access, the DDRSDRC uses the transfer type signal provided by the master requesting the access. If the next access is a sequential write access, writing to the SDRAM device is carried out. If the next access is a write non-sequential access, then an automatic access break is inserted, the DDRSDRC generates a precharge command, activates the new row and initiates a write command. To comply with SDRAM timing parameters, additional clock cycles are inserted between precharge/active (tRP) commands and active/write (tRCD) commands.

For a definition of timing parameters, refer to Section 22.8.4 “DDRSDRC Timing Parameter 0 Register” on page 259.

Write accesses to the SDRAM devices are burst oriented and the burst length is programmed to 8. It determines the maximum number of column locations that can be accessed for a given write command. When the write command is issued, 8 columns are selected. All accesses for that burst take place within these eight columns, thus the burst wraps within these 8 columns if a boundary is reached. These 8 columns are selected by addr[13:3]. addr[2:0] is used to select the starting location within the block.

In the case of incrementing burst (INCR/INCR4/INCR8/INCR16), the addresses can cross the 16-byte boundary of the SDRAM device. For example, in the case of DDR-SDRAM devices, when a transfer (INCR4) starts at address 0x0C, the next access is 0x10, but since the burst length is programmed to 8, the next access is at 0x00. Since the boundary is reached, the burst is wrapping. The DDRSDRC takes this feature of the SDRAM device into account. In the case of transfer starting at address 0x04/0x08/0x0C (DDR-SDRAM devices) or starting at address 0x10/0x14/0x18/0x1C, two write commands are issued to avoid to wrap when the boundary is reached. The last write command is subject to DM input logic level. If DM is registered high, the corresponding data input is ignored and write access is not done. This avoids additional writing being done.

Figure 22-2. Single Write Access, Row Closed, Low-power DDR1-SDRAM Device

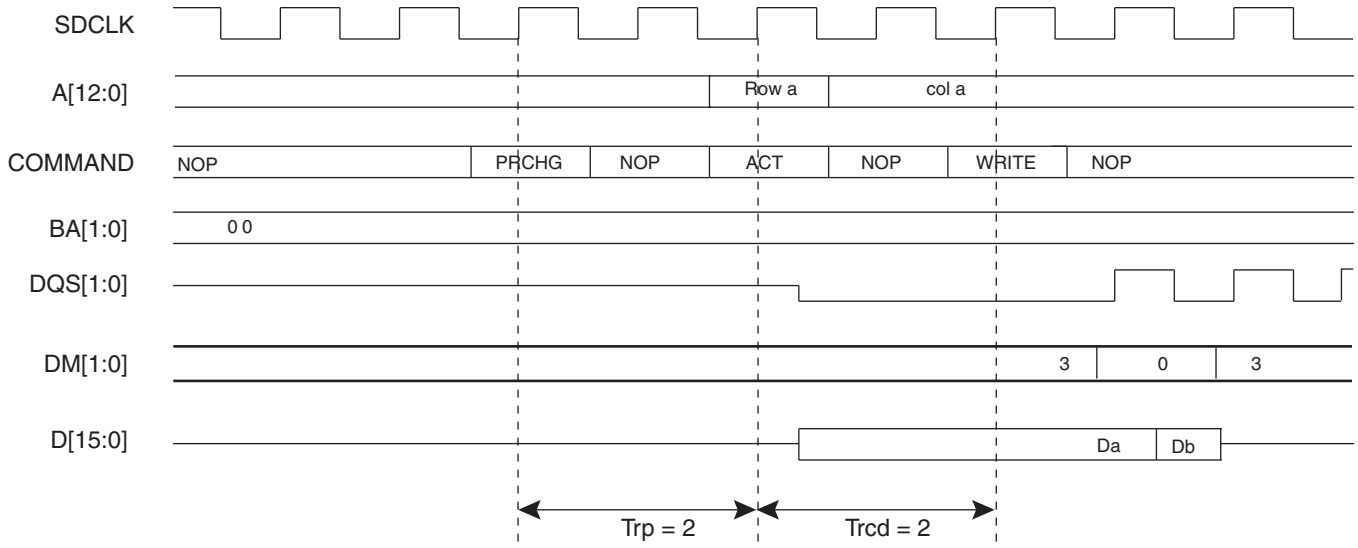

Figure 22-3. Single Write Access, Row Closed, DDR2-SDRAM Device

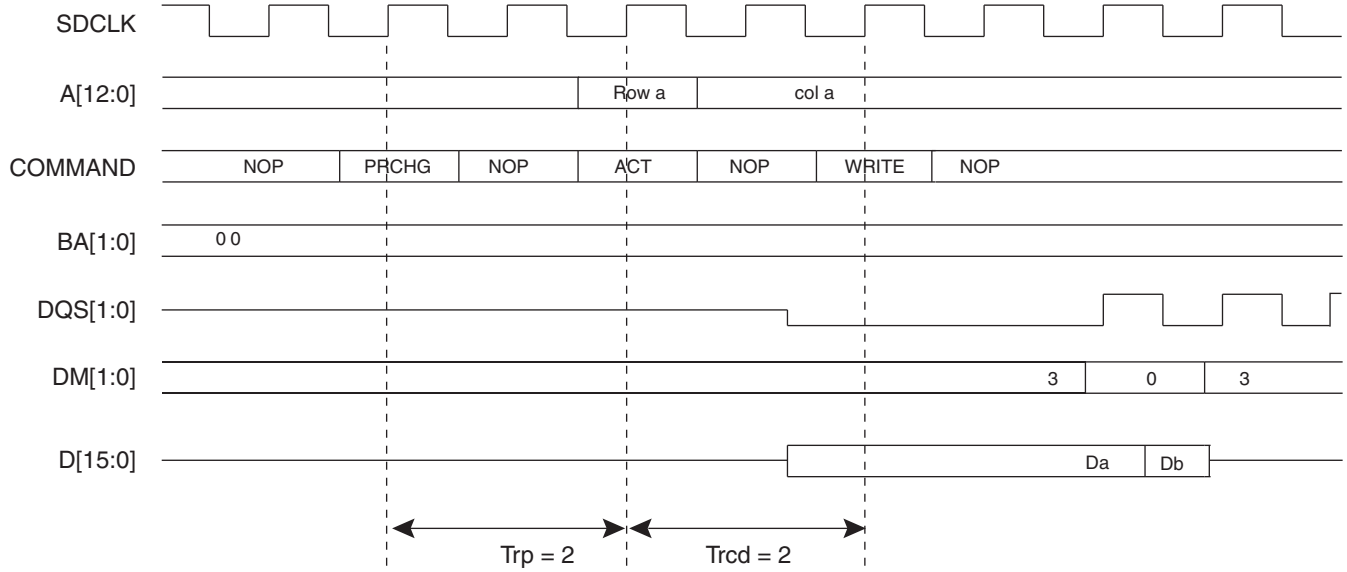

Figure 22-4. Single Write Access, Row Closed, SDR-SDRAM Device

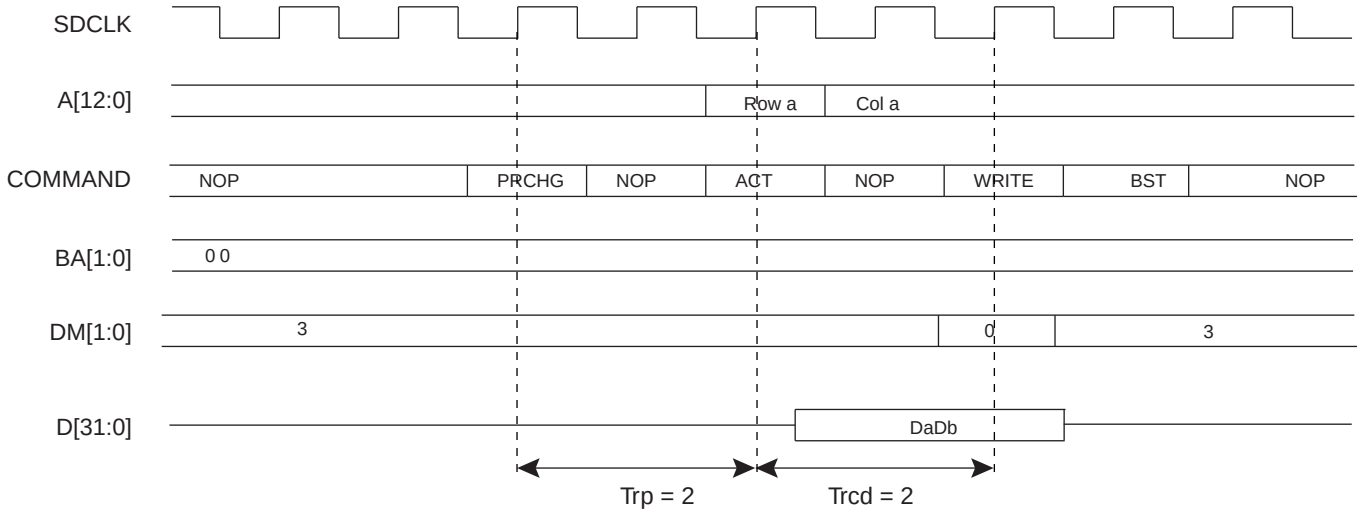

Figure 22-5. Burst Write Access, Row Closed, Low-power DDR1-SDRAM Device

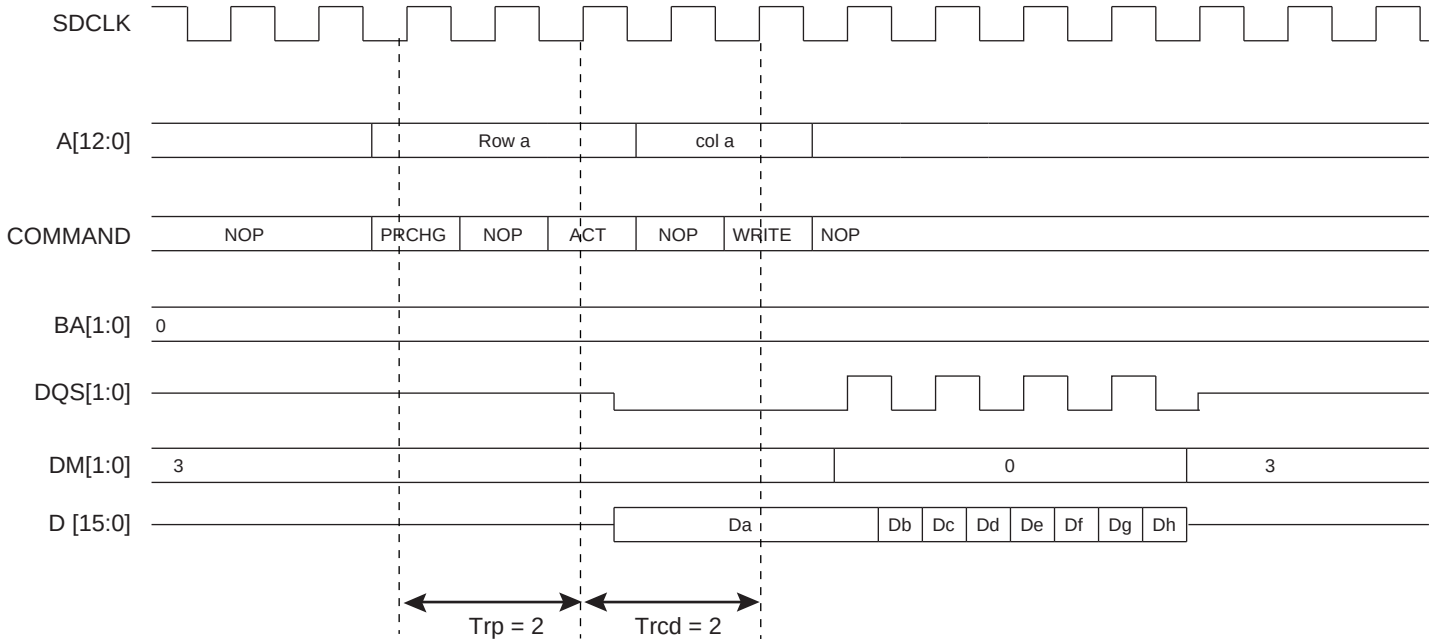

Figure 22-6. Burst Write Access, Row Closed, DDR2-SDRAM Device

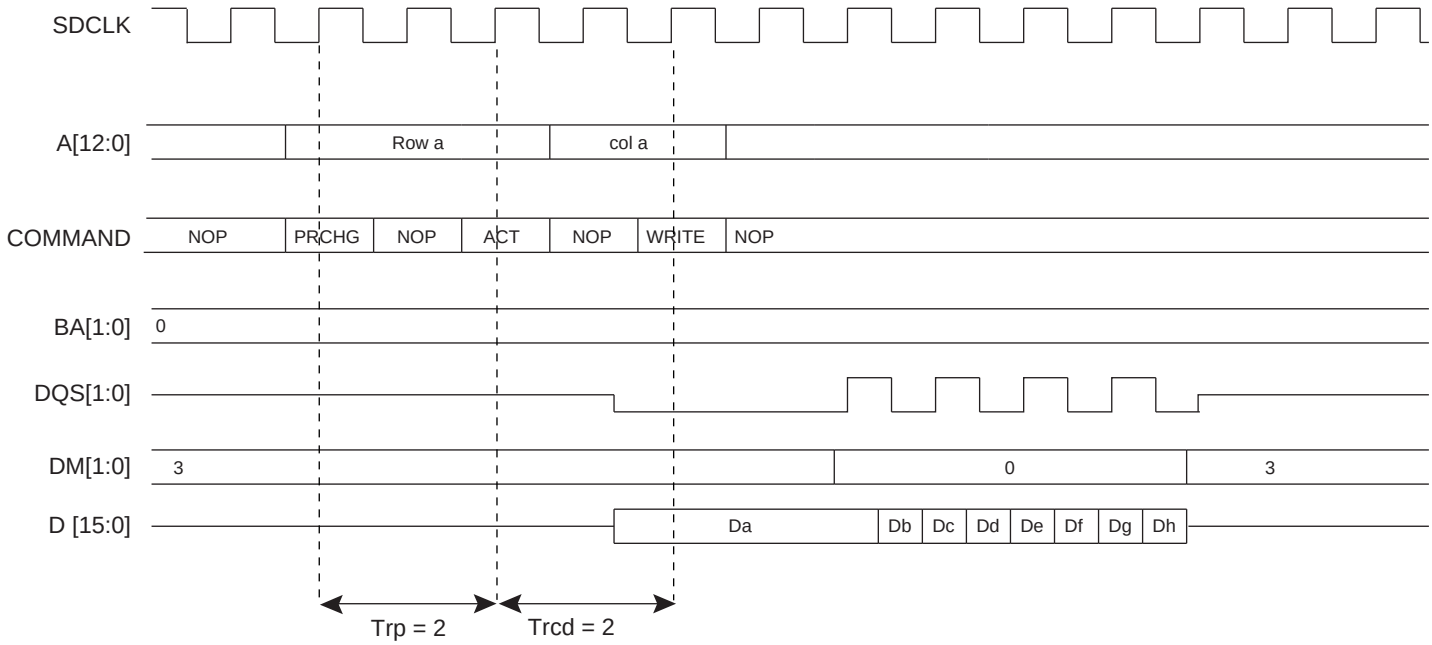

Figure 22-7. Burst Write Access, Row Closed, SDR-SDRAM Device

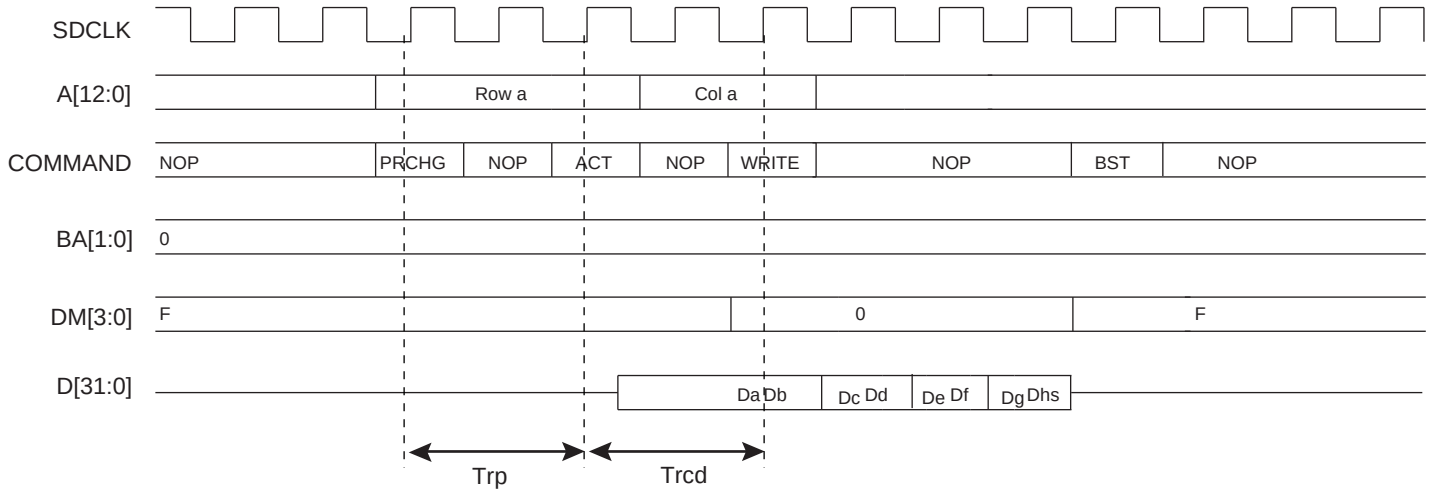

A write command can be followed by a read command. To avoid breaking the current write burst, Twtr/Twrd (bl/2 + 2 = 6 cycles) should be met. See Figure 22-8 on page 236.

Figure 22-8. Write Command Followed By a Read Command without Burst Write Interrupt, Low-power DDR1-SDRAM Device

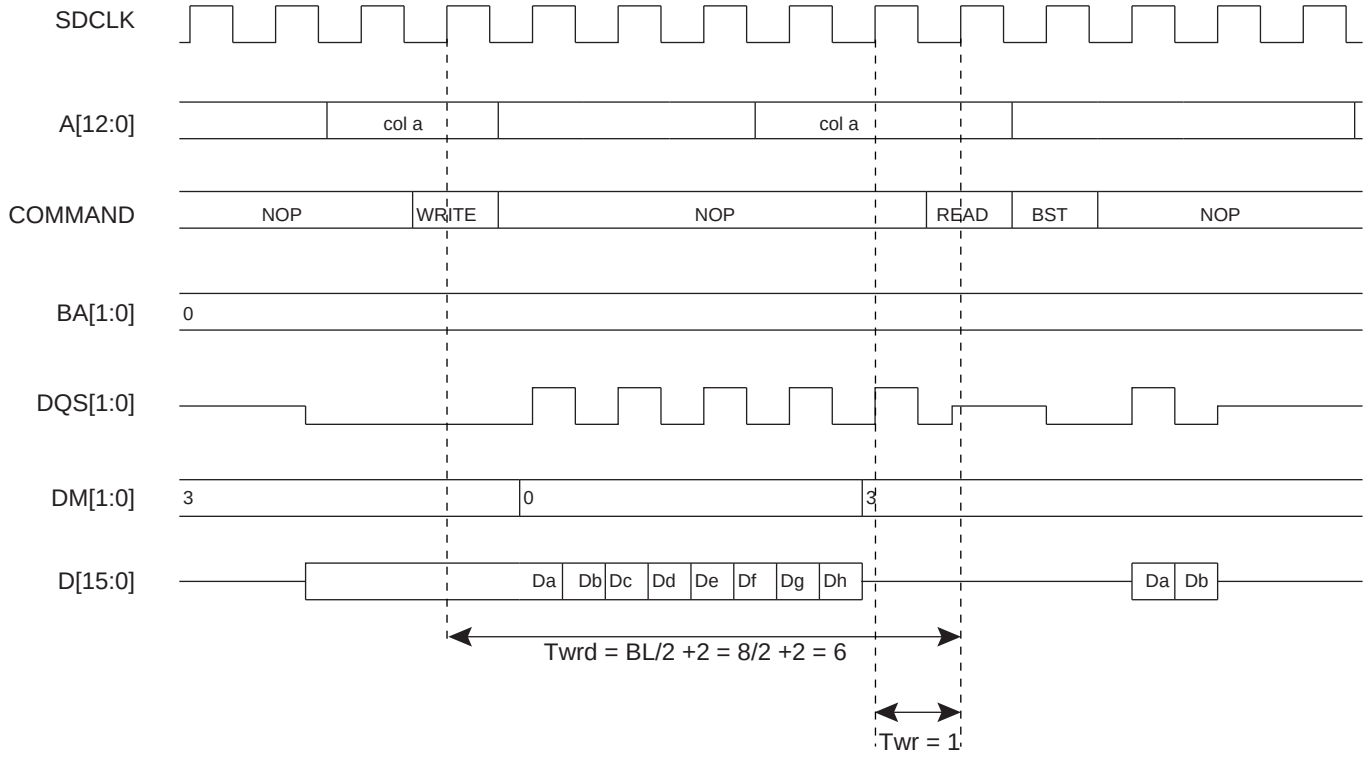

In the case of a single write access, write operation should be interrupted by a read access but DM must be input 1 cycle prior to the read command to avoid writing invalid data. See Figure 22-9 on page 236.

Figure 22-9. Single Write Access Followed By A Read Access Low-power DDR1-SDRAM Devices

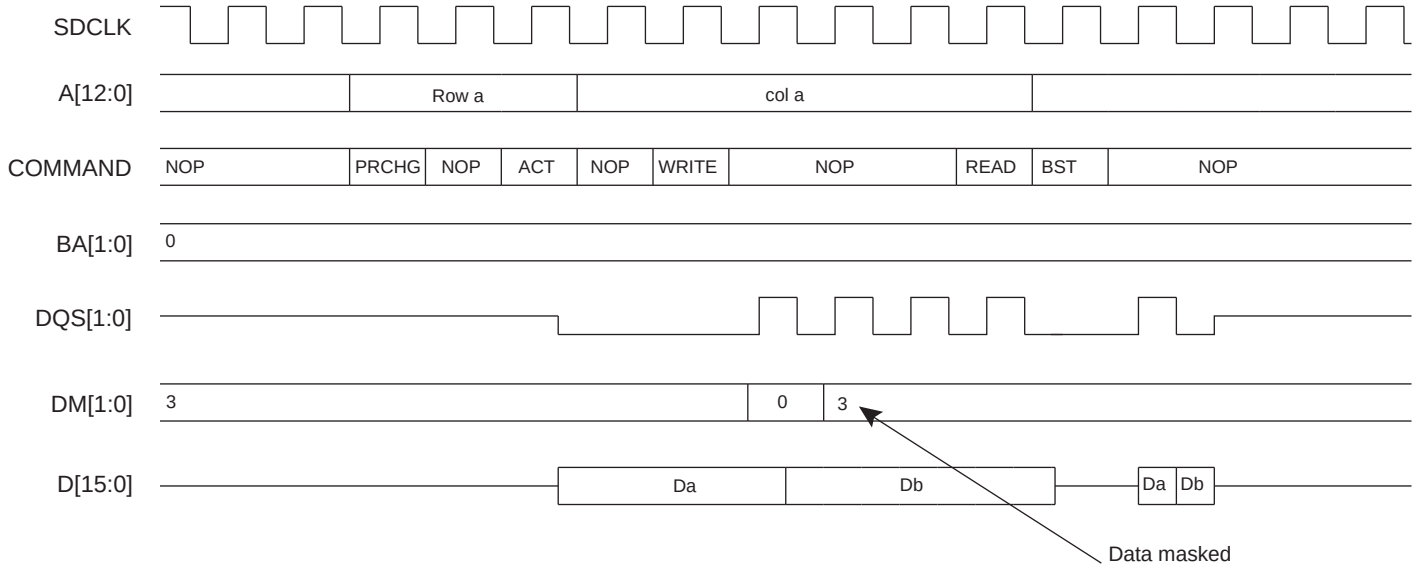

Figure 22-10. SINGLE Write Access Followed By A Read Access, DDR2 -SDRAM Device

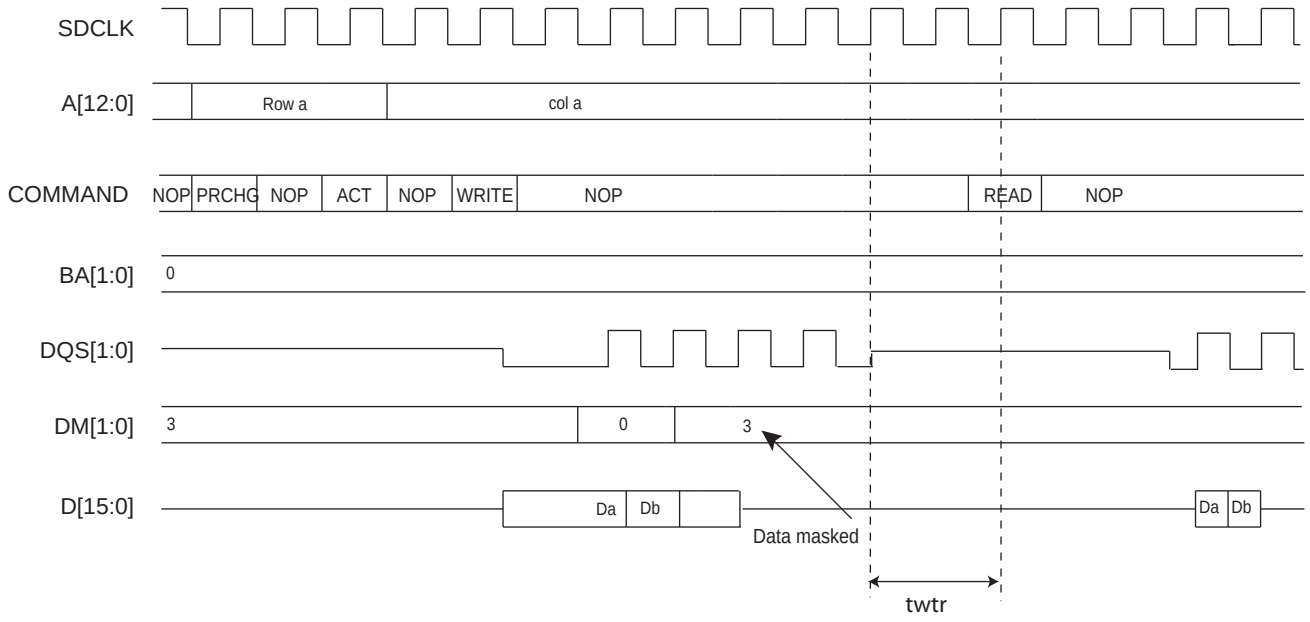

22.5.2 SDRAM Controller Read Cycle

The DDRSDRC allows burst access or single access in normal mode (mode =000). Whatever access type, the DDRSDRC keeps track of the active row in each bank, thus maximizing performance of the DDRSDRC.

The SDRAM devices are programmed with a burst length equal to 8 which determines the length of a sequential data output by the read command that is set to 8. The latency from read command to data output is equal to 2 or 3. This value is programmed during the initialization phase (see Section 22.4.1 “SDR-SDRAM Initialization” on page 228).

To initiate a single access, the DDRSDRC checks if the page access is already open. If row/bank addresses match with the previous row/bank addresses, the controller generates a read command. If the bank addresses are not identical or if bank addresses are identical but the row addresses are not identical, the controller generates a pre-charge command, activates the new row and initiates a read command. To comply with SDRAM timing parameters, additional clock cycles are inserted between precharge/active (Trp) commands and active/read (Trcd) command. After a read command, additional wait states are generated to comply with cas latency. The DDRSDRC supports a cas latency of two, two and half, and three (2 or 3 clocks delay). As the burst length is fixed to 8, in the case of single access or burst access inferior to 8 data requests, it has to stop the burst otherwise seven or X values could be read. Burst Stop Command (BST) is used to stop output during a burst read.

To initiate a burst access, the DDRSDRC checks the transfer type signal. If the next accesses are sequential read accesses, reading to the SDRAM device is carried out. If the next access is a read non-sequential access, then an automatic page break can be inserted. If the bank addresses are not identical or if bank addresses are identical but the row addresses are not identical, the controller generates a precharge command, activates the new row and initiates a read command. In the case where the page access is already open, a read command is generated.

To comply with SDRAM timing parameters, additional clock cycles are inserted between precharge/active (Trp) commands and active/read (Trcd) commands. The DDRSDRC supports a cas latency of two, two and half, and three (2 or 3 clocks delay). During this delay, the controller uses internal signals to anticipate the next access and improve the performance of the controller. Depending on the latency(2/3), the DDRSDRC anticipates 2 or 3 read accesses. In the case of burst of specified length, accesses are not anticipated, but if the burst is broken (border, busy mode, etc.), the next access is treated as an incrementing burst of unspecified length, and in function of the latency(2/3), the DDRSDRC anticipates 2 or 3 read accesses.

For a definition of timing parameters, refer to Section 22.8.3 “DDRSDRC Configuration Register” on page 256.

Read accesses to the SDRAM are burst oriented and the burst length is programmed to 8. It determines the maximum number of column locations that can be accessed for a given read command. When the read command is issued, 8 columns are selected. All accesses for that burst take place within these eight columns, meaning that the burst wraps within these 8 columns if the boundary is reached. These 8 columns are selected by addr[13:3]; addr[2:0] is used to select the starting location within the block.

In the case of incrementing burst (INCR/INCR4/INCR8/INCR16), the addresses can cross the 16-byte boundary of the SDRAM device. For example, when a transfer (INCR4) starts at address 0x0C, the next access is 0x10, but since the burst length is programmed to 8, the next access is 0x00. Since the boundary is reached, the burst wraps. The DDRSDRC takes into account this feature of the SDRAM device. In the case of DDR-SDRAM devices, transfers start at address 0x04/0x08/0x0C. In the case of SDR-SDRAM devices, transfers start at address 0x14/0x18/0x1C. Two read commands are issued to avoid wrapping when the boundary is reached. The last read command may generate additional reading (1 read cmd = 4 DDR words or 1 read cmd = 8 SDR words).

To avoid additional reading, it is possible to use the burst stop command to truncate the read burst and to decrease power consumption.

Figure 22-11. Single Read Access, Row Close, Latency = 2,Low-power DDR1-SDRAM Device

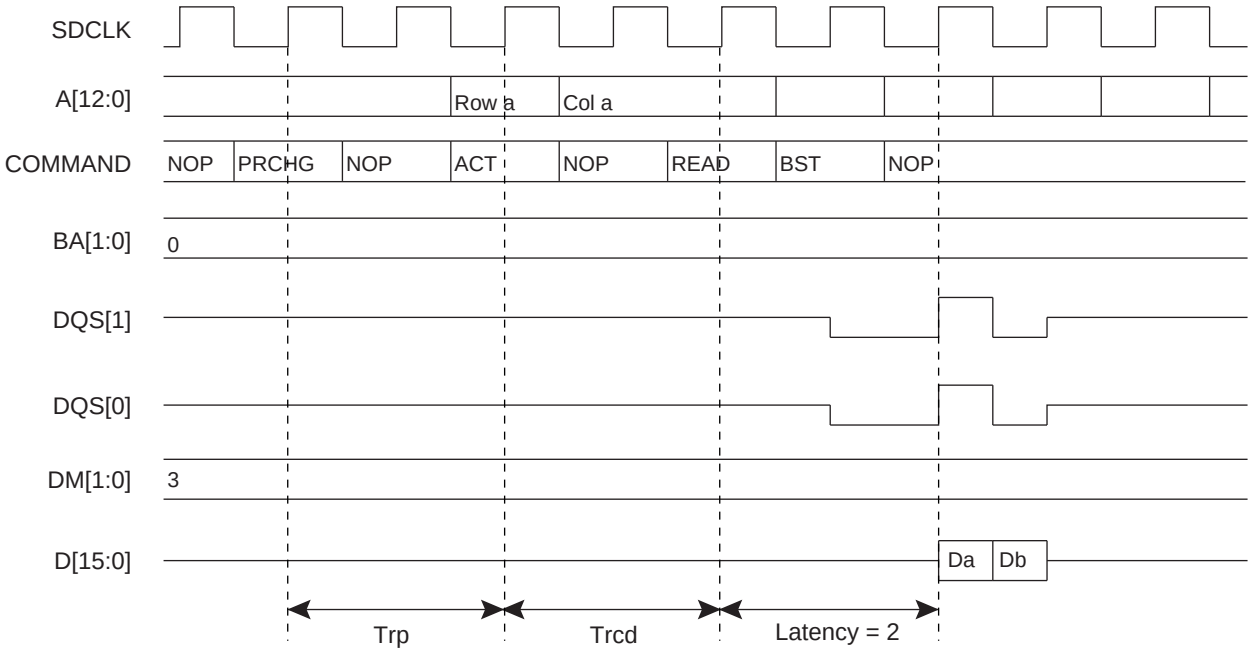

Figure 22-12. Single Read Access, Row Close, Latency = 3, DDR2-SDRAM Device

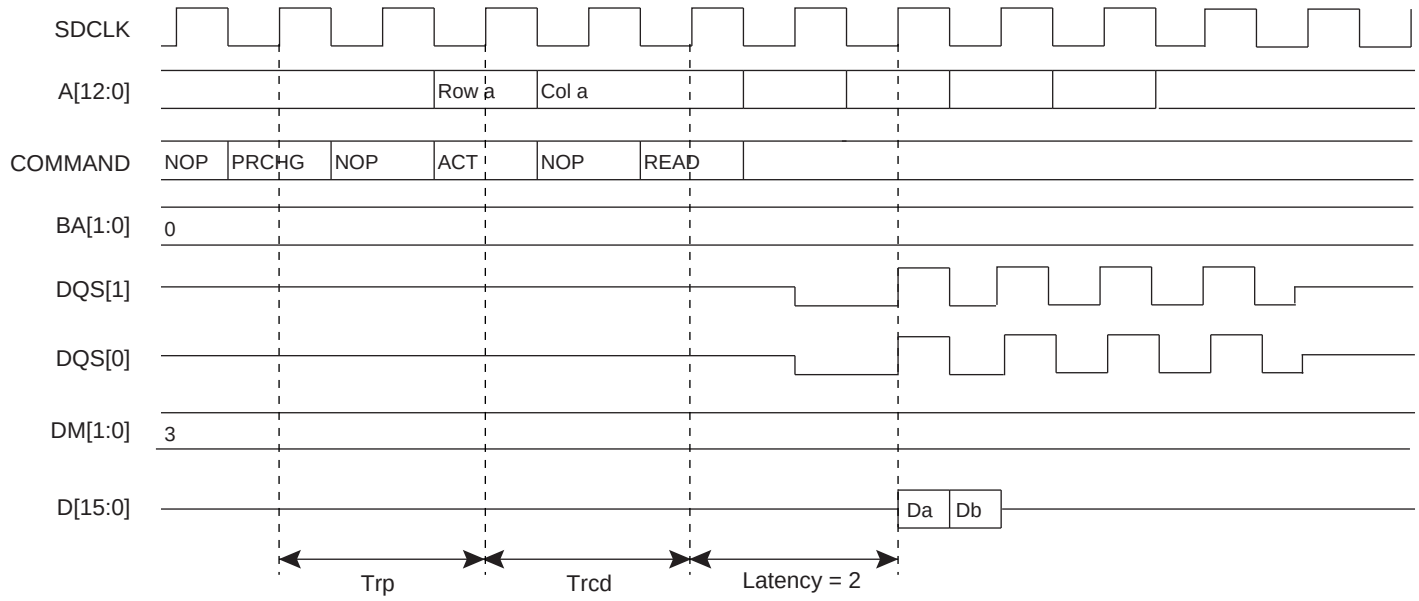

Figure 22-13. Single Read Access, Row Close, Latency = 2, SDR-SDRAM Device

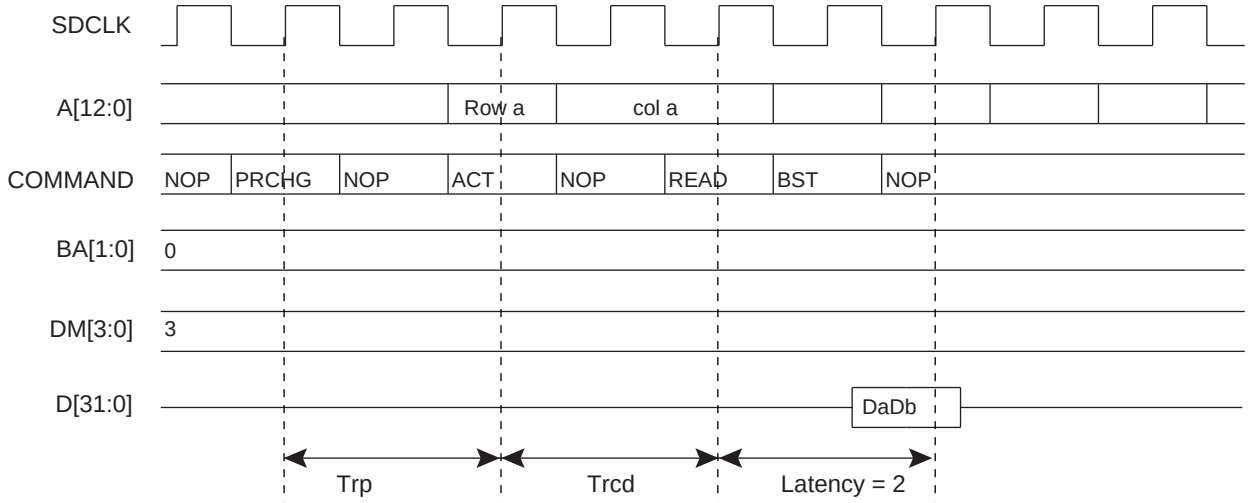

Figure 22-14. Burst Read Access, Latency = 2, Low-power DDR1-SDRAM Devices

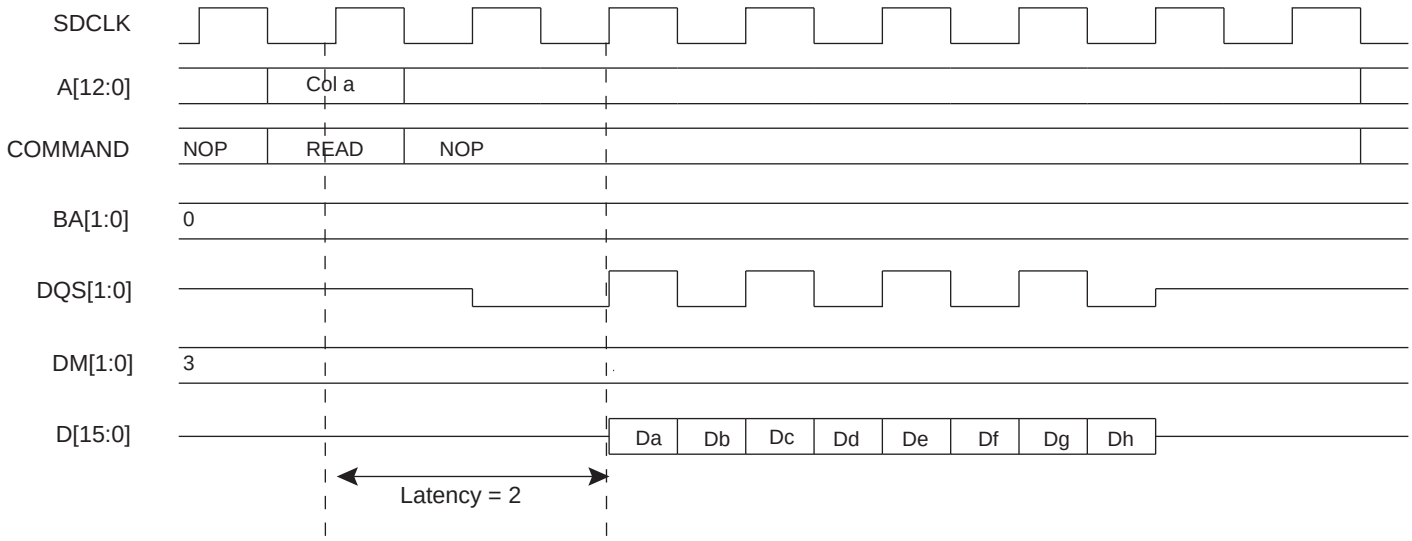

Figure 22-15. Burst Read Access, Latency = 3, DDR2-SDRAM Devices

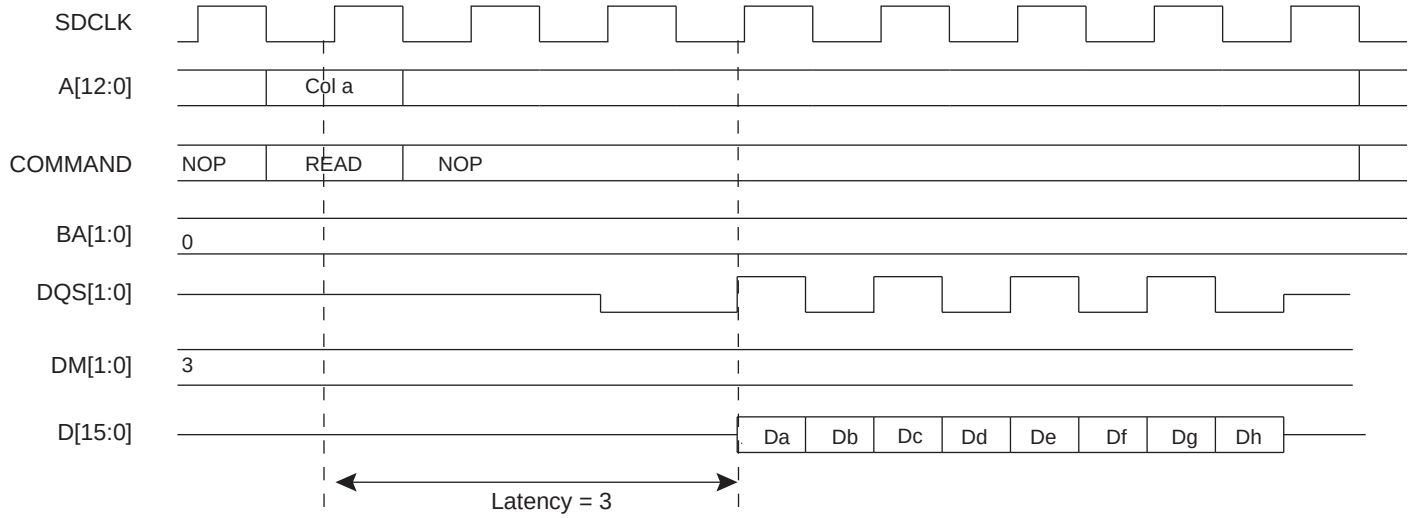

Figure 22-16. Burst Read Access, Latency = 2, SDR-SDRAM Devices

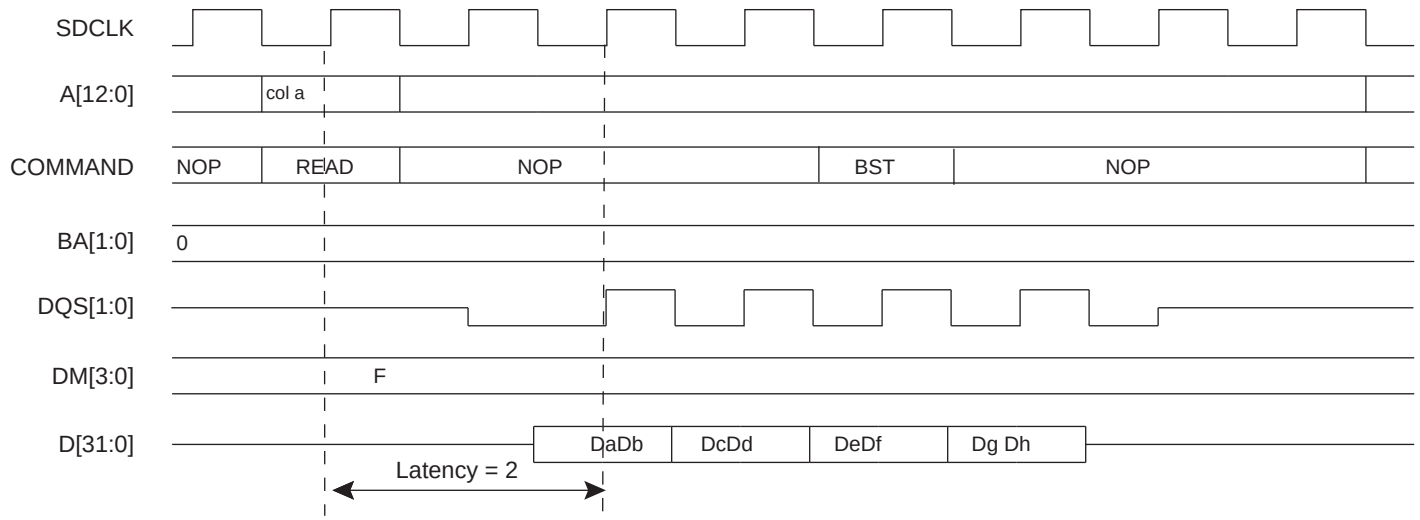

22.5.3 Refresh (Auto-refresh Command)

An auto-refresh command is used to refresh the DDRSDRC. Refresh addresses are generated internally by the SDRAM device and incremented after each auto-refresh automatically. The DDRSDRC generates these auto-refresh commands periodically. A timer is loaded with the value in the register DDRSDRC_TR that indicates the number of clock cycles between refresh cycles. When the DDRSDRC initiates a refresh of an SDRAM device, internal memory accesses are not delayed. However, if the CPU tries to access the SDRAM device, the slave indicates that the device is busy. A request of refresh does not interrupt a burst transfer in progress.

22.5.4 Power Management

22.5.4.1 Self Refresh Mode

This mode is activated by setting low-power command bits [LPCB] to ‘01’ in the DDRSDRC_LPR Register

Self refresh mode is used to reduce power consumption, i.e., when no access to the SDRAM device is possible. In this case, power consumption is very low. In self refresh mode, the SDRAM device retains data without external clocking and provides its own internal clocking, thus performing its own auto-refresh cycles. All the inputs to the SDRAM device become “don’t care” except CKE, which remains low. As soon as the SDRAM device is selected, the DDRSDRC provides a sequence of commands and exits self refresh mode.

The DDRSDRC re-enables self refresh mode as soon as the SDRAM device is not selected. It is possible to define when self refresh mode will be enabled by setting the register LPR (see Section 22.8.7 “DDRSDRC Low-power Register” on page 263), timeout command bit:

- 00 = Self refresh mode is enabled as soon as the SDRAM device is not selected
- 01 = Self refresh mode is enabled 64 clock cycles after completion of the last access
- 10 = Self refresh mode is enabled 128 clock cycles after completion of the last access

As soon as the SDRAM device is no longer selected, PRECHARGE ALL BANKS command is generated followed by a SELF-REFREFSH command. If, between these two commands an SDRAM access is detected, SELF-REFREFSH command will be replaced by an AUTO-REFRESH command. According to the application, more AUTO-REFRESH commands will be performed when the self refresh mode is enabled during the application.

This controller also interfaces low-power SDRAM. These devices add a new feature: A single quarter, one half quarter or all banks of the SDRAM array can be enabled in self refresh mode. Disabled banks will be not refreshed in self refresh mode. This feature permits to reduce the self refresh current. The extended mode register controls this feature, it includes Temperature Compensated Self Refresh (TSCR), Partial Array Self Refresh (PASR)

parameters and Drive Strength (DS). These parameters are set during the initialization phase. After initialization, as soon as PASR/DS/TCSR fields are modified, the Extended Mode Register in the memory of the external device is accessed automatically and PASR/DS/TCSR bits are updated before entry into self refresh mode if DDRSDRC does not share an external bus with another controller or during a refresh command, and a pending read or write access, if DDRSDRC does share an external bus with another controller. This type of update is a function of the UPD_MR bit (see Section 22.8.7 “DDRSDRC Low-power Register” on page 263).

The low-power SDR-SDRAM must remain in self refresh mode for a minimum period of TRAS periods and may remain in self refresh mode for an indefinite period. (See Figure 22-17)

The low-power DDR1-SDRAM must remain in self refresh mode for a minimum of TRFC periods and may remain in self refresh mode for an indefinite period.

The DDR2-SDRAM must remain in self refresh mode for a minimum of TCKE periods and may remain in self refresh mode for an indefinite period.

Figure 22-17. Self Refresh Mode Entry, Timeout = 0

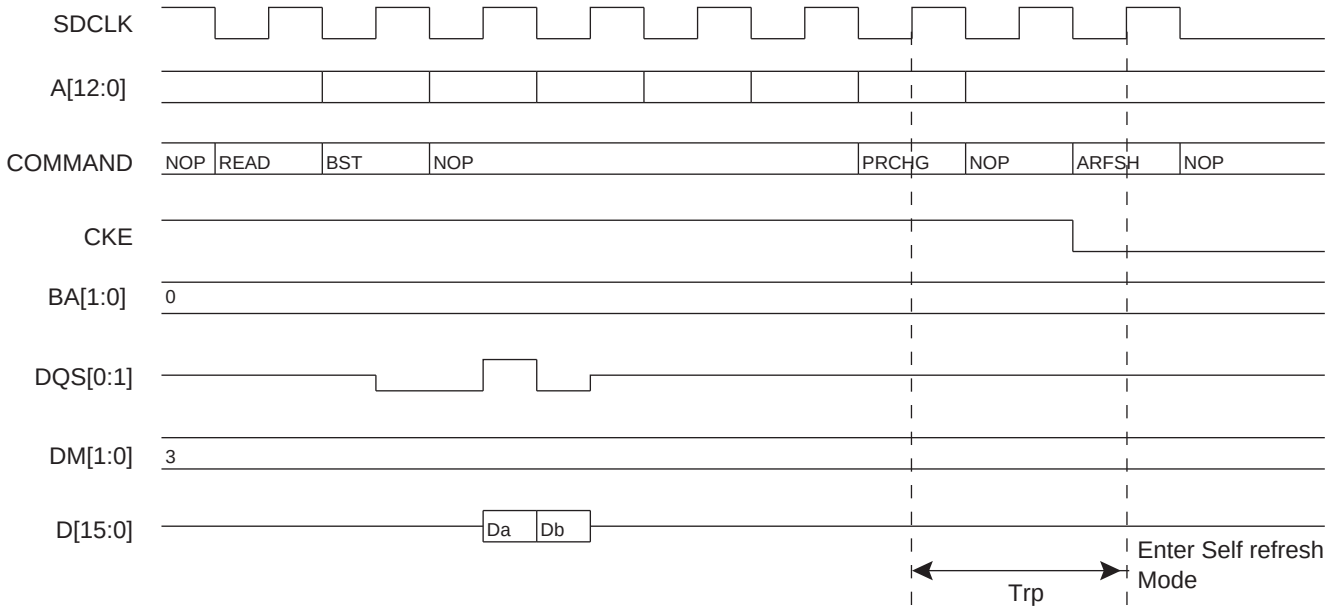

Figure 22-18. Self Refresh Mode Entry, Timeout = 1 or 2

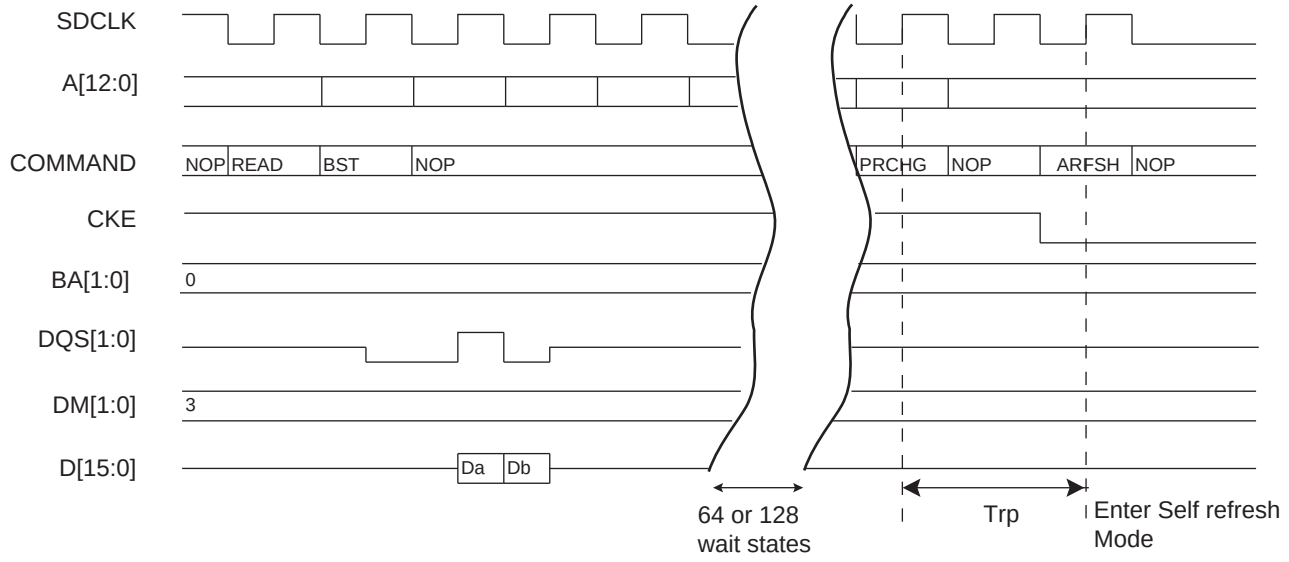

Figure 22-19. Self Refresh Mode Exit

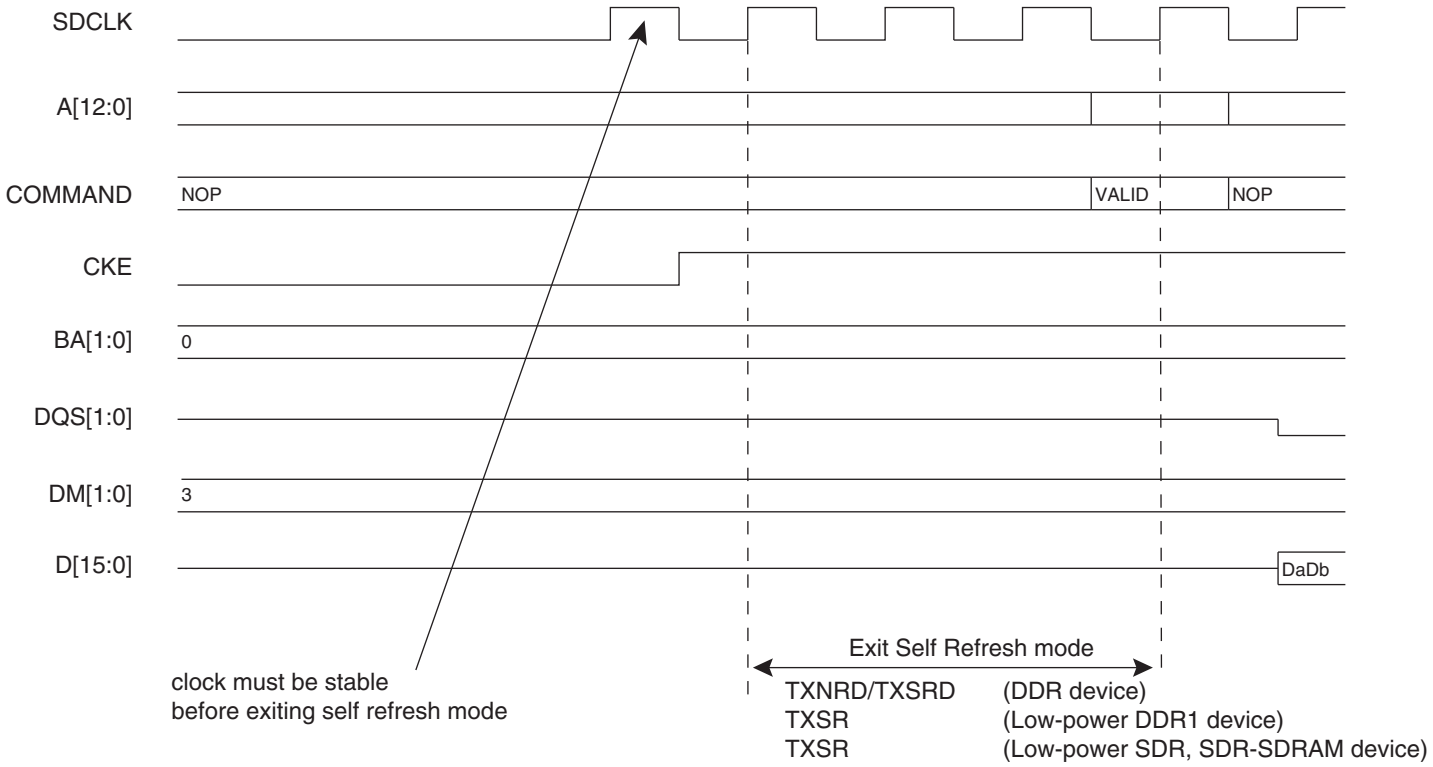

Figure 22-20. Self Refresh and Automatic Update

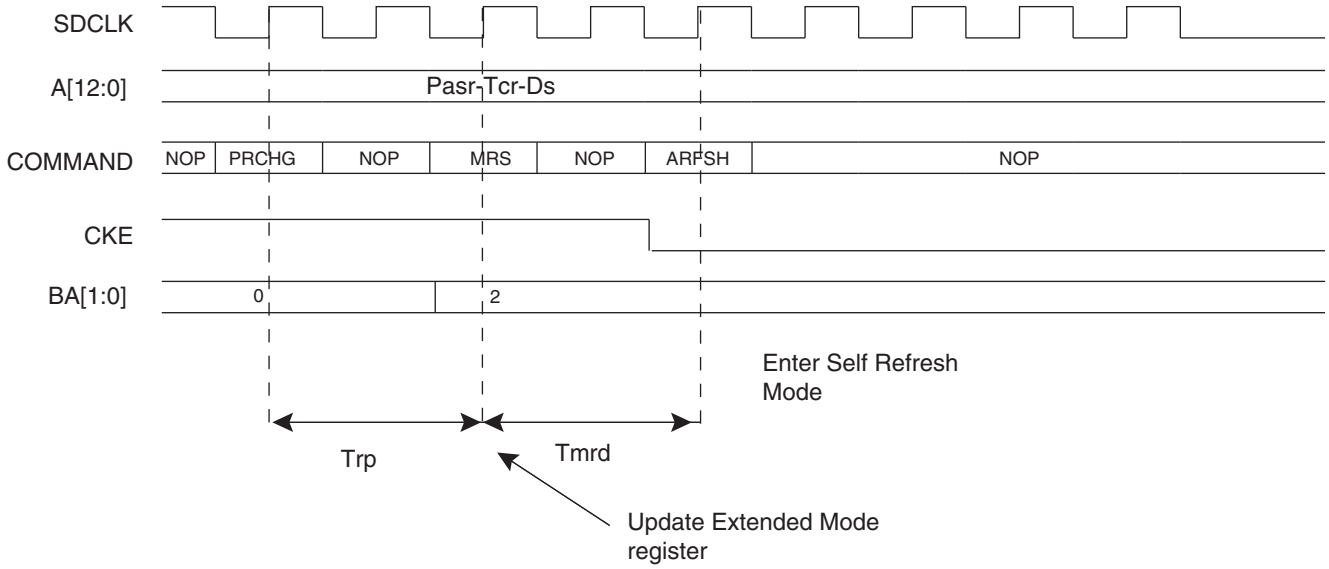

Figure 22-21. Automatic Update During AUTO-REFRESH Command and SDRAM Access

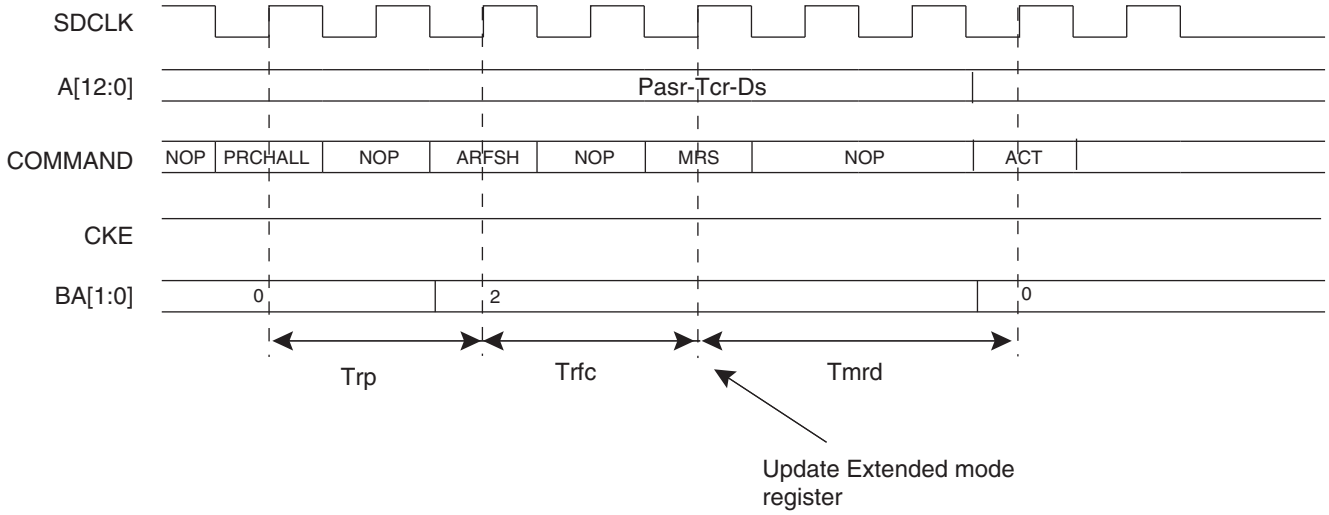

22.5.4.2 Power-down Mode

This mode is activated by setting the low-power command bits [LPCB] to ‘10’.

Power-down mode is used when no access to the SDRAM device is possible. In this mode, power consumption is greater than in self refresh mode. This state is similar to normal mode (No low-power mode/No self refresh mode), but the CKE pin is low and the input and output buffers are deactivated as soon the SDRAM device is no longer accessible. In contrast to self refresh mode, the SDRAM device cannot remain in low-power mode longer than the refresh period (64 ms). As no auto-refresh operations are performed in this mode, the DDRSDRC carries out the refresh operation. In order to exit low-power mode, a NOP command is required in the case of Low-power SDR-SDRAM and SDR-SDRAM devices. In the case of Low-power DDR1-SDRAM devices, the controller generates a NOP command during a delay of at least TXP. In addition, Low-power DDR1-SDRAM and DDR2-SDRAM must remain in power-down mode for a minimum period of TCKE periods.

The exit procedure is faster than in self refresh mode. See Figure 22-22 on page 245. The DDRSDRC returns to power-down mode as soon as the SDRAM device is not selected. It is possible to define when power-down mode is enabled by setting the register LPR, timeout command bit.

- 00 = Power-down mode is enabled as soon as the SDRAM device is not selected
- 01 = Power-down mode is enabled 64 clock cycles after completion of the last access
- 10 = Power-down mode is enabled 128 clock cycles after completion of the last access

Figure 22-22. Power-down Entry/Exit, Timeout = 0

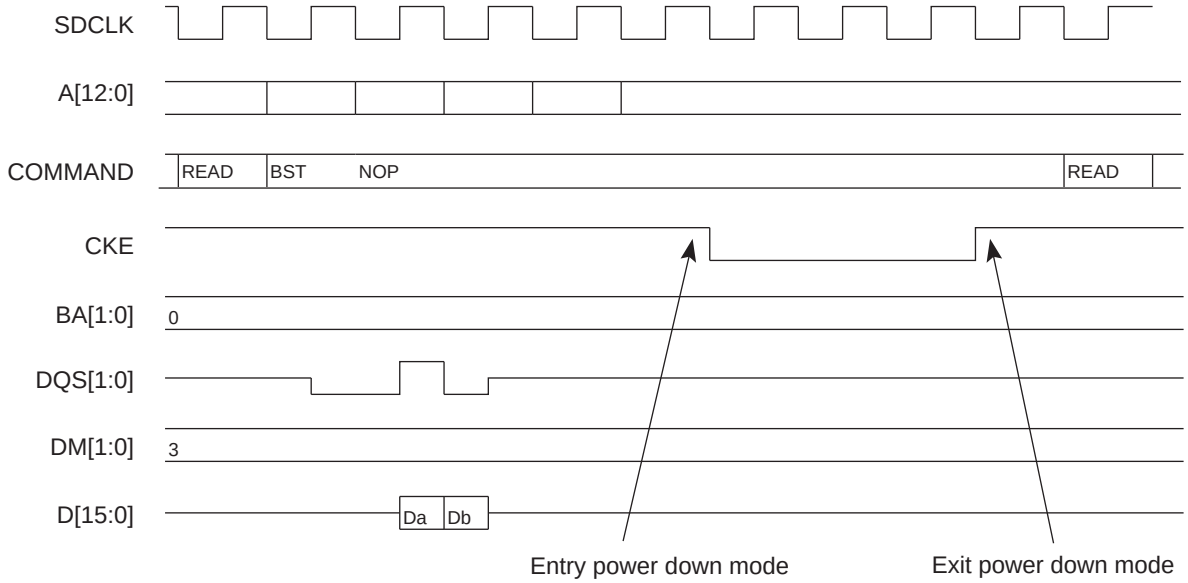

22.5.4.3 *Deep Power-down Mode*

The deep power-down mode is a new feature of the Low-power SDRAM. When this mode is activated, all internal voltage generators inside the device are stopped and all data is lost.

This mode is activated by setting the low-power command bits [LPCB] to '11'. When this mode is enabled, the DDRSDRC leaves normal mode (mode == 000) and the controller is frozen. To exit deep power-down mode, the low-power bits (LPCB) must be set to "00", an initialization sequence must be generated by software. See Section 22.4.2 "Low-power DDR1-SDRAM Initialization" on page 229.

Figure 22-23. Deep Power-down Mode Entry

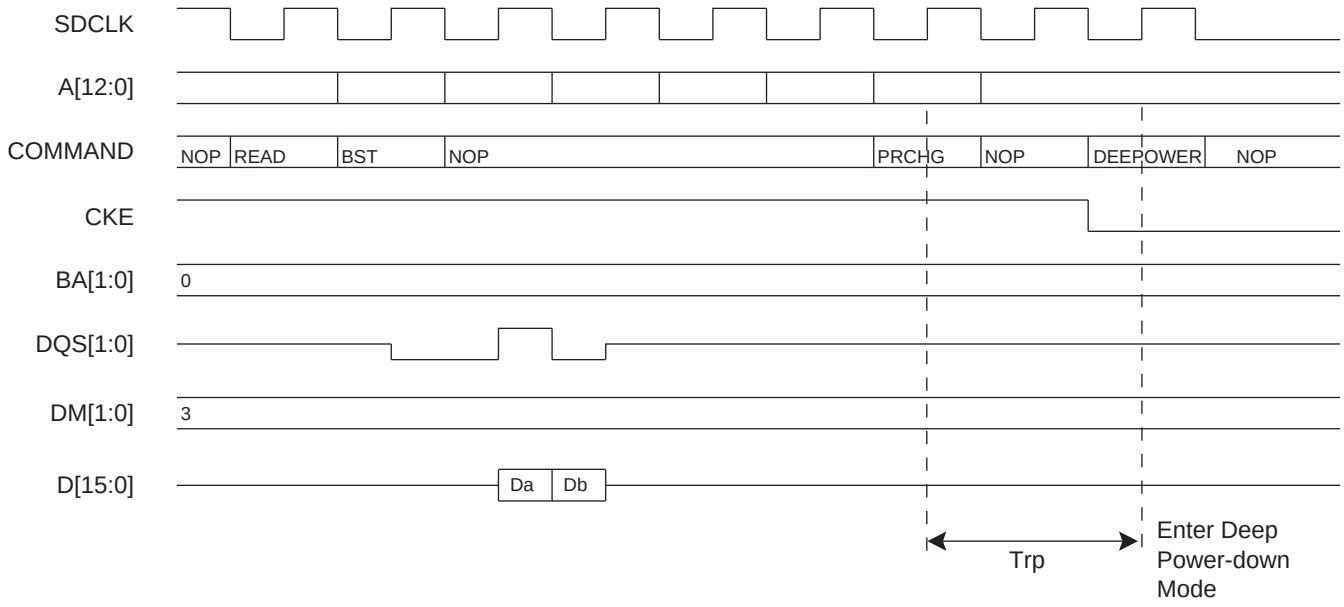

22.5.4.4 *Reset Mode*

The reset mode is a feature of the DDR2-SDRAM. This mode is activated by setting the low-power command bits (LPCB) to 11 and the clock frozen command bit (CLK_FR) to 1.

When this mode is enabled, the DDRSDRC leaves normal mode (mode == 000) and the controller is frozen. Before enabling this mode, the end user must assume there is not an access in progress.

To exit reset mode, the low-power command bits (LPCB) must be set to "00", clock frozen command bit (CLK_FR) set to 0 and an initialization sequence must be generated by software. See Section 22.4.3 "DDR2-SDRAM Initialization" on page 230.

22.5.5 Multi-port Functionality

The SDRAM protocol imposes a check of timings prior to performing a read or a write access, thus decreasing the performance of systems. An access to SDRAM is performed if banks and rows are open (or active). To activate a row in a particular bank, it has to de-active the last open row and open the new row. Two SDRAM commands must be performed to open a bank: Precharge and Active command with respect to Trp timing. Before performing a read or write command, Trcd timing must checked.

This operation represents a significative loss. (see Figure 22-24).

Figure 22-24. Trp and Trcd Timings

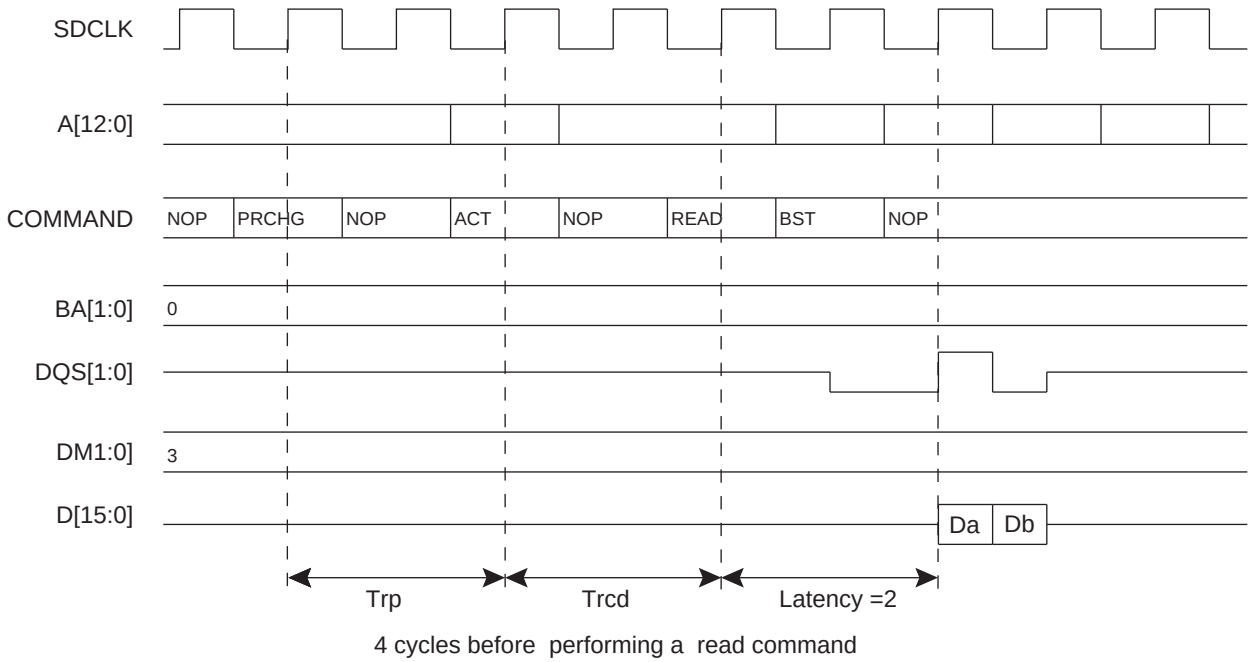

The multi-port controller has been designed to mask these timings and thus improve the bandwidth of the system.

DDRSDRC is a multi-port controller since four masters can simultaneously reach the controller. This feature improves the bandwidth of the system because it can detect four requests on the AHB slave inputs and thus anticipate the commands that follow, PRECHARGE and ACTIVE commands in bank X during current access in bank Y. This allows Trp and Trcd timings to be masked (see Figure 22-25). In the best case, all accesses are done as if the banks and rows were already open. The best condition is met when the four masters work in different banks. In the case of four simultaneous read accesses, when the four banks and associated rows are open, the controller reads with a continuous flow and masks the cas latency for each different access. To allow a continuous flow, the read command must be set at 2 or 3 cycles (cas latency) before the end of current access. This requires that the scheme of arbitration changes since the round-robin arbitration cannot be respected. If the controller anticipates a read access, and thus before the end of current access a master with a high priority arises, then this master will not serviced.

The arbitration mechanism reduces latency when conflicts occur, i.e., when two or more masters try to access the SDRAM device at the same time.

The arbitration type is round-robin arbitration. This algorithm dispatches the requests from different masters to the SDRAM device in a round-robin manner. If two or more master requests arise at the same time, the master with the lowest number is serviced first, then the others are serviced in a round-robin manner. To avoid burst breaking and to provide the maximum throughput for the SDRAM device, arbitration may only take place during the following cycles:

1. Idle cycles: When no master is connected to the SDRAM device.
2. Single cycles: When a slave is currently doing a single access.
3. End of Burst cycles: When the current cycle is the last cycle of a burst transfer. For bursts of defined length, predicted end of burst matches the size of the transfer. For bursts of undefined length, predicted end of burst is generated at the end of each four beat boundary inside the INCR transfer.
4. Anticipated Access: When an anticipate read access is done while current access is not complete, the arbitration scheme can be changed if the anticipated access is not the next access serviced by the arbitration scheme.

Figure 22-25. Anticipate Precharge/Active Command in Bank 2 during Read Access in Bank 1

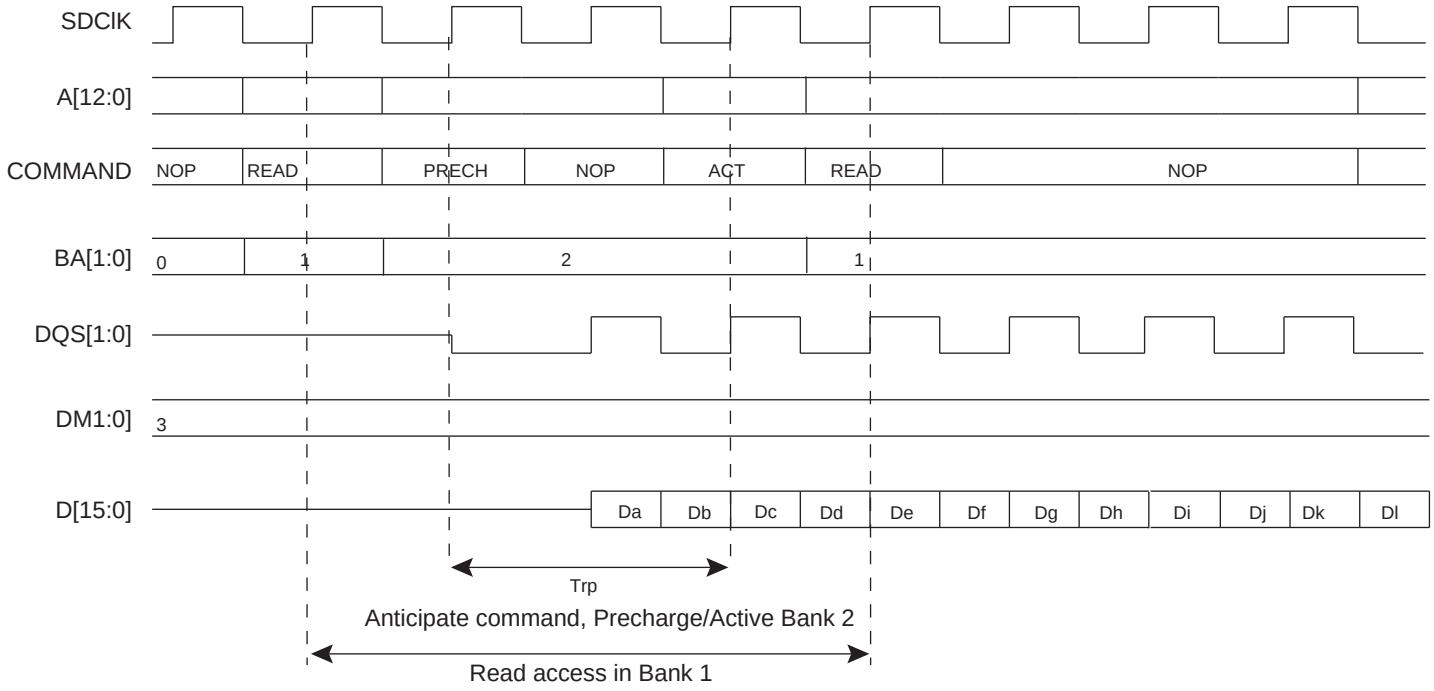

22.5.6 Write Protected Registers

To prevent any single software error that may corrupt DDRSDRC behavior, the registers listed below can be write-protected by setting the WPEN bit in the DDRSDRC Write Protect Mode Register (DDRSDRC_WPMR).

If a write access in a write-protected register is detected, then the WPVS flag in the DDRSDRC Write Protect Status Register (DDRSDRC_WPSR) is set and the field WPVSRC indicates in which register the write access has been attempted.

The WPVS flag is automatically reset after reading the DDRSDRC Write Protect Status Register (DDRSDRC_WPSR).

Following is a list of the write protected registers:

- “DDRSDRC Mode Register” on page 254
- “DDRSDRC Refresh Timer Register” on page 255
- “DDRSDRC Configuration Register” on page 256
- “DDRSDRC Timing Parameter 0 Register” on page 259
- “DDRSDRC Timing Parameter 1 Register” on page 261
- “DDRSDRC Timing Parameter 2 Register” on page 262
- “DDRSDRC Memory Device Register” on page 265
- “DDRSDRC High Speed Register” on page 267

22.6 Software Interface/SDRAM Organization, Address Mapping

The SDRAM address space is organized into banks, rows and columns. The DDRSDRC maps different memory types depending on the values set in the DDRSDRC Configuration Register. See Section 22.8.3 “DDRSDRC Configuration Register” on page 256. The following figures illustrate the relation between CPU addresses and columns, rows and banks addresses for 16-bit memory data bus widths and 32-bit memory data bus widths.

The DDRSDRC supports address mapping in linear mode.

Linear mode is a method for address mapping where banks alternate at each last SDRAM page of current bank.

The DDRSDRC makes the SDRAM devices access protocol transparent to the user. Table 22-1 to Table 22-7 illustrate the SDRAM device memory mapping seen by the user in correlation with the device structure. Various configurations are illustrated.

22.6.1 SDRAM Address Mapping for 16-bit Memory Data Bus Width[(1)] and Four Banks

Table 22-1. Linear Mapping for SDRAM Configuration, 2K Rows, 512/1024/2048/4096 Columns

CPU Address Line																										
27	26	25	24	23	22	21	20	19	18	17	16	15	14	13	12	11	10	9	8	7	6	5	4	3	2	1	0
					Bk[1:0]	Row[10:0]												Column[8:0]									M0
				Bk[1:0]	Row[10:0]												Column[9:0]										M0
			Bk[1:0]	Row[10:0]												Column[10:0]											M0
		Bk[1:0]	Row[10:0]												Column[11:0]												M0

Table 22-2. Linear Mapping for SDRAM Configuration: 4K Rows, 512/1024/2048/4096 Columns

CPU Address Line																										
27	26	25	24	23	22	21	20	19	18	17	16	15	14	13	12	11	10	9	8	7	6	5	4	3	2	1	0
				Bk[1:0]	Row[11:0]													Column[8:0]									M0
			Bk[1:0]	Row[11:0]													Column[9:0]										M0
		Bk[1:0]	Row[11:0]													Column[10:0]											M0
	Bk[1:0]	Row[11:0]													Column[11:0]												M0

Table 22-3. Linear Mapping for SDRAM Configuration: 8K Rows, 512/1024/2048/4096 Columns

CPU Address Line																										
27	26	25	24	23	22	21	20	19	18	17	16	15	14	13	12	11	10	9	8	7	6	5	4	3	2	1	0
			Bk[1:0]	Row[12:0]														Column[8:0]									M0
		Bk[1:0]	Row[12:0]														Column[9:0]										M0
	Bk[1:0]	Row[12:0]														Column[10:0]											M0
Bk[1:0]	Row[12:0]														Column[11:0]												M0

Table 22-4. Linear Mapping for SDRAM Configuration: 16K Rows, 512/1024/2048 Columns

CPU Address Line																											
27	26	25	24	23	22	21	20	19	18	17	16	15	14	13	12	11	10	9	8	7	6	5	4	3	2	1	0
		Bk[1:0]		Row[13:0]														Column[8:0]									M0
	Bk[1:0]		Row[13:0]														Column[9:0]										M0
Bk[1:0]		Row[13:0]														Column[10:0]											M0

Note: 1. SDR-SDRAM devices with eight columns in 16-bit mode are not supported.

22.6.2 SDR-SDRAM Address Mapping for 32-bit Memory Data Bus Width

Table 22-5. SDR-SDRAM Configuration Mapping: 2K Rows, 256/512/1024/2048 Columns

CPU Address Line																											
27	26	25	24	23	22	21	20	19	18	17	16	15	14	13	12	11	10	9	8	7	6	5	4	3	2	1	0
					Bk[1:0]		Row[10:0]											Column[7:0]								M[1:0]	
				Bk[1:0]		Row[10:0]											Column[8:0]									M[1:0]	
			Bk[1:0]		Row[10:0]											Column[9:0]										M[1:0]	
		Bk[1:0]		Row[10:0]											Column[10:0]											M[1:0]	

Table 22-6. SDR-SDRAM Configuration Mapping: 4K Rows, 256/512/1024/2048 Columns

CPU Address Line																											
27	26	25	24	23	22	21	20	19	18	17	16	15	14	13	12	11	10	9	8	7	6	5	4	3	2	1	0
				Bk[1:0]		Row[11:0]												Column[7:0]								M[1:0]	
			Bk[1:0]		Row[11:0]												Column[8:0]									M[1:0]	
		Bk[1:0]		Row[11:0]												Column[9:0]										M[1:0]	
	Bk[1:0]		Row[11:0]												Column[10:0]											M[1:0]	

Table 22-7. SDR-SDRAM Configuration Mapping: 8K Rows, 256/512/1024/2048 Columns

CPU Address Line																											
27	26	25	24	23	22	21	20	19	18	17	16	15	14	13	12	11	10	9	8	7	6	5	4	3	2	1	0
			Bk[1:0]		Row[12:0]													Column[7:0]								M[1:0]	
		Bk[1:0]		Row[12:0]													Column[8:0]									M[1:0]	
	Bk[1:0]		Row[12:0]													Column[9:0]										M[1:0]	
Bk[1:0]		Row[12:0]													Column[10:0]											M[1:0]	

Notes: 1. M[1:0] is the byte address inside a 32-bit word.
2. Bk[1] = BA1, Bk[0] = BA0

22.7 Programmable IO Delays

The external bus interface consists of a data bus, an address bus and control signals. The simultaneous switching outputs on these busses may lead to a peak of current in the internal and external power supply lines.

In order to reduce the peak of current in such cases, additional propagation delays can be adjusted independently for pad buffers by means of configuration registers, DDRSDRC_DELAY1-8.

The additional programmable delays for each IO range from 0 to 4 ns (Worst Case PVT). The delay can differ between IOs supporting this feature. Delay can be modified per programming for each IO. The minimal additional delay that can be programmed on a PAD supporting this feature is 1/16 of the maximum programmable delay.

When programming 0x0 in fields “Delay1 to Delay8”, no delay is added (reset value) and the propagation delay of the pad buffers is the inherent delay of the pad buffer. When programming 0xF in field “Delay1” the propagation delay of the corresponding pad is maximal.

DDRSDRC_DELAY1, DDRSDRC_DELAY2 allow to configure delay on D[15:0], DDRSDRC_DELAY1[3:0] corresponds to D[0] and DDRSDRC_DELAY2[3:0] corresponds to D[8].

DDRSDRC_DELAY3, DDRSDRC_DELAY4 allow to configure delay on A13:0], DDRSDRC_DELAY3[3:0] corresponds to A[0] and DDRSDRC_DELAY4[3:0] corresponds to A[8].

Figure 22-26. Programmable IO Delays

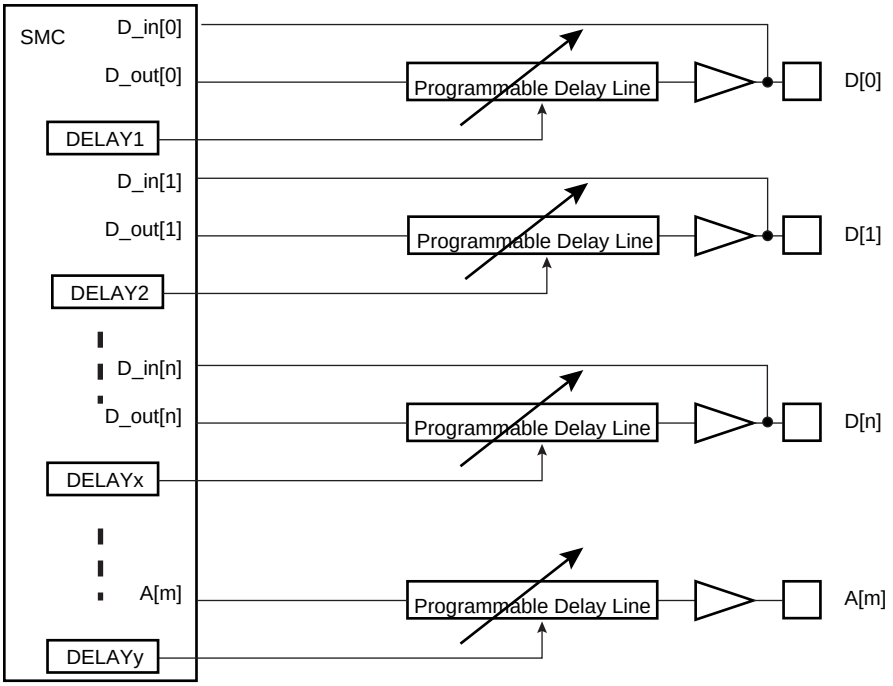

22.8 DDR SDR SDRAM Controller (DDRSDRC) User Interface

The User Interface is connected to the APB bus.

The DDRSDRC is programmed using the registers listed in Table 22-8

Table 22-8. Register Mapping

Offset	Register	Name	Access	Reset
0x00	DDRSDRC Mode Register	DDRSDRC_MR	Read-write	0x00000000
0x04	DDRSDRC Refresh Timer Register	DDRSDRC_RTR	Read-write	0x00000000
0x08	DDRSDRC Configuration Register	DDRSDRC_CR	Read-write	0x7024
0x0C	DDRSDRC Timing Parameter 0 Register	DDRSDRC_TPR0	Read-write	0x20227225
0x10	DDRSDRC Timing Parameter 1 Register	DDRSDRC_TPR1	Read-write	0x3c80808
0x14	DDRSDRC Timing Parameter 2 Register	DDRSDRC_TPR2	Read-write	0x2062
0x18	Reserved	–	–	–
0x1C	DDRSDRC Low-power Register	DDRSDRC_LPR	Read-write	0x10000
0x20	DDRSDRC Memory Device Register	DDRSDRC_MD	Read-write	0x10
0x24	DDRSDRC DLL Information Register	DDRSDRC_DLL	Read-only	0x00000001
0x2C	DDRSDRC High Speed Register	DDRSDRC_HS	Read-write	0x0
0x40	DDRSDRC Delay I/O Register	DDRSDRC_DELAY1	Read-write	0x00000000
0x44	DDRSDRC Delay I/O Register	DDRSDRC_DELAY2	Read-write	0x00000000
0x48	DDRSDRC Delay I/O Register	DDRSDRC_DELAY3	Read-write	0x00000000
0x4C	DDRSDRC Delay I/O Register	DDRSDRC_DELAY4	Read-write	0x00000000
0x50	Reserved	–	–	–
0x54-0x58	Reserved	-	-	-
0x60-0xE0	Reserved	–	–	–
0xE4	DDRSDRC Write Protect Mode Register	DDRSDRC_WPMR	Read-write	0x00000000
0xE8	DDRSDRC Write Protect Status Register	DDRSDRC_WPSR	Read-only	0x00000000

22.8.1 DDRSDRC Mode Register

Name: DDRSDRC_MR

Address: 0xFFFFE600 (0), 0xFFFFE400 (1)

Access: Read-write

Reset: See Table 22-8

31	30	29	28	27	26	25	24
–	–	–	–	–	–	–	–

23	22	21	20	19	18	17	16
–	–	–	–	–	–	–	–

15	14	13	12	11	10	9	8
–	–	–	–	–	–	–	–

7	6	5	4	3	2	1	0
–	–	–	–	–	MODE		

This register can only be written if the bit WPEN is cleared in "DDRSDRC Write Protect Mode Register" on page 269.

- **MODE: DDRSDRC Command Mode**

This field defines the command issued by the DDRSDRC when the SDRAM device is accessed. This register is used to initialize the SDRAM device and to activate deep power-down mode.

MODE	Description
000	Normal Mode. Any access to the DDRSDRC will be decoded normally. To activate this mode, command must be followed by a write to the SDRAM.
001	The DDRSDRC issues a NOP command when the SDRAM device is accessed regardless of the cycle. To activate this mode, command must be followed by a write to the SDRAM.
010	The DDRSDRC issues an "All Banks Precharge" command when the SDRAM device is accessed regardless of the cycle. To activate this mode, command must be followed by a write to the SDRAM.
011	The DDRSDRC issues a "Load Mode Register" command when the SDRAM device is accessed regardless of the cycle. To activate this mode, command must be followed by a write to the SDRAM.
100	The DDRSDRC issues an "Auto-Refresh" Command when the SDRAM device is accessed regardless of the cycle. Previously, an "All Banks Precharge" command must be issued. To activate this mode, command must be followed by a write to the SDRAM.
101	The DDRSDRC issues an "Extended Load Mode Register" command when the SDRAM device is accessed regardless of the cycle. To activate this mode, the "Extended Load Mode Register" command must be followed by a write to the SDRAM. The write in the SDRAM must be done in the appropriate bank.
110	Deep power mode: Access to deep power-down mode
111	Reserved

22.8.2 DDRSDRC Refresh Timer Register

Name: DDRSDRC_RTR

Address: 0xFFFFE604 (0), 0xFFFFE404 (1)

Access: Read-write

Reset: See Table 22-8

31	30	29	28	27	26	25	24
–	–	–	–	–	–	–	–

23	22	21	20	19	18	17	16
–	–	–	–	–	–	–	–

15	14	13	12	11	10	9	8
–	–	–	–	COUNT			

7	6	5	4	3	2	1	0
COUNT							

This register can only be written if the bit WPEN is cleared in "DDRSDRC Write Protect Mode Register" on page 269.

- **COUNT: DDRSDRC Refresh Timer Count**

This 12-bit field is loaded into a timer which generates the refresh pulse. Each time the refresh pulse is generated, a refresh sequence is initiated.

SDRAM devices require a refresh of all rows every 64 ms. The value to be loaded depends on the DDRSDRC clock frequency (MCK: Master Clock) and the number of rows in the device.

For example, for an SDRAM with 8192 rows and a 100 MHz Master clock, the value of Refresh Timer Count bit is programmed: $(((64 \times 10^{-3})/8192) \times 100 \times 10^{6} = 781$ or 0x030D.

22.8.3 DDRSDRC Configuration Register

Name: DDRSDRC_CR

Address: 0xFFFFE608 (0), 0xFFFFE408 (1)

Access: Read-write

Reset: See Table 22-8

31	30	29	28	27	26	25	24
–	–	–	–	–	–	–	–

23	22	21	20	19	18	17	16
–	–	–	–	–	ACTBST	–	EBISHARE

15	14	13	12	11	10	9	8
–	OCD			–	–	DIS_DLL	DIC/DS

7	6	5	4	3	2	1	0
DLL	CAS			NR		NC	

This register can only be written if the bit WPEN is cleared in "DDRSDRC Write Protect Mode Register" on page 269.

- **NC: Number of Column Bits**

The reset value is 9 column bits.

SDR-SDRAM devices with eight columns in 16-bit mode are not supported.

NC	DDR - Column bits	SDR - Column bits
00	9	8
01	10	9
10	11	10
11	12	11

- **NR: Number of Row Bits**

The reset value is 12 row bits.

NR	Row bits
00	11
01	12
10	13
11	14

- **CAS: CAS Latency**

The reset value is 2 cycles.

CAS	DDR2 CAS Latency	SDR CAS Latency
000	Reserved	Reserved
001	Reserved	Reserved
010	Reserved	2
011	3	3
100	Reserved	Reserved
101	Reserved	Reserved
110	Reserved	Reserved
111	Reserved	Reserved

- **DLL: Reset DLL**

Reset value is 0.

This field defines the value of Reset DLL.

0 = Disable DLL reset.

1 = Enable DLL reset.

This value is used during the power-up sequence.

Note: This field is found only in DDR2-SDRAM devices.

- **DIC/DS: Output Driver Impedance Control**

Reset value is 0.

This field defines the output drive strength.

0 = Normal driver strength.

1 = Weak driver strength.

This value is used during the power-up sequence. This parameter is found in the datasheet as DIC or DS.

Note: This field is found only in DDR2-SDRAM devices.

- **DIS_DLL: Disable DLL**

Reset value is 0.

0 = Enable DLL

1 = Disable DLL

Note: This field is found only in DDR2-SDRAM devices.

- **OCD: Off-chip Driver**

Reset value is 7.

Note: OCD is NOT supported by the controller, but these values MUST be programmed during the initialization sequence.

Note: This field is found only in DDR2-SDRAM devices.

OCD	
000	OCD calibration mode exit, maintain setting
111	OCD calibration default

- **EBISHARE: External Bus Interface is Shared**

The DDR controller embedded in the EBI is used at the same time as another memory controller (SMC,..)

Reset value is 0.

0 = Only the DDR controller function is used.

1 = The DDR controller shares the EBI with another memory controller (SMC, NAND,..)

- **ACTBST: ACTIVE Bank X to Burst Stop Read Access Bank Y**

Reset value is 0.

0 = After an ACTIVE command in Bank X, BURST STOP command can be issued to another bank to stop current read access.

1 = After an ACTIVE command in Bank X, BURST STOP command cannot be issued to another bank to stop current read access.

This field is unique to SDR-SDRAM, Low-power SDR-SDRAM and Low-power DDR1-SDRAM devices.

22.8.4 DDRSDRC Timing Parameter 0 Register

Name: DDRSDRC_TPR0

Address: 0xFFFFE60C (0), 0xFFFFE40C (1)

Access: Read-write

Reset: See Table 22-8

31	30	29	28	27	26	25	24
TMRD				REDUCE_WRRD	TWTR		

23	22	21	20	19	18	17	16
TRRD				TRP			

15	14	13	12	11	10	9	8
TRC				TWR			

7	6	5	4	3	2	1	0
TRCD				TRAS			

This register can only be written if the bit WPEN is cleared in "DDRSDRC Write Protect Mode Register" on page 269.

- **TRAS: Active to Precharge Delay**

Reset Value is 5 cycles.

This field defines the delay between an Activate Command and a Precharge Command in number of cycles. Number of cycles is between 0 and 15.

- **TRCD: Row to Column Delay**

Reset Value is 2 cycles.

This field defines the delay between an Activate Command and a Read/Write Command in number of cycles. Number of cycles is between 0 and 15.

- **TWR: Write Recovery Delay**

Reset value is 2 cycles.

This field defines the Write Recovery Time in number of cycles. Number of cycles is between 1 and 15.

- **TRC: Row Cycle Delay**

Reset value is 7 cycles.

This field defines the delay between an Activate command and Refresh command in number of cycles. Number of cycles is between 0 and 15

- **TRP: Row Precharge Delay**

Reset Value is 2 cycles.

This field defines the delay between a Precharge Command and another command in number of cycles. Number of cycles is between 0 and 15.

- **TRRD: Active bankA to Active bankB**

Reset value is 2 cycles.

This field defines the delay between an Active command in BankA and an active command in bankB in number of cycles. Number of cycles is between 1 and 15.

- **TWTR: Internal Write to Read Delay**

Reset value is 0.

This field is unique to Low-power DDR1-SDRAM devices and DDR2-SDRAM devices.

This field defines the internal write to read command Time in number of cycles. Number of cycles is between 1 and 7.

Value	Name	Description
1	ONE	does 1
2	TWO	does 2
3	THREE	does 3
4	FOUR	does 4
5	FIVE	does 5
6	SIX	does 6
7	SEVEN	does 7

In the case of low-power DDR1-SDRAM device the coding is different

Value	Name	Description
0	ONE	does 1
1	TWO	does 2
2-7	–	Reserved

- **REDUCE_WRRD: Reduce Write to Read Delay**

Reset value is 0.

This field reduces the delay between write to read access for low-power DDR-SDRAM devices with a latency equal to 2. To use this feature, TWTR field must be equal to 0. Important to note is that some devices do not support this feature.

- **TMRD: Load Mode Register Command to Active or Refresh Command**

Reset Value is 2 cycles.

This field defines the delay between a Load mode register command and an active or refresh command in number of cycles. Number of cycles is between 0 and 15.

22.8.5 DDRSDRC Timing Parameter 1 Register

Name: DDRSDRC_TPR1

Address: 0xFFFFE610 (0), 0xFFFFE410 (1)

Access: Read-write

Reset: See Table 22-8

31	30	29	28	27	26	25	24
–	–	–	–	TXP			

23	22	21	20	19	18	17	16
TXSRD							

15	14	13	12	11	10	9	8
TXSNR							

7	6	5	4	3	2	1	0
–	–	–	TRFC				

This register can only be written if the bit WPEN is cleared in "DDRSDRC Write Protect Mode Register" on page 269.

- **TRFC: Row Cycle Delay**

Reset Value is 8 cycles.

This field defines the delay between a Refresh and an Activate command or Refresh command in number of cycles. Number of cycles is between 0 and 31

- **TXSNR: Exit Self Refresh Delay to Non-read Command**

Reset Value is 8 cycles.

This field defines the delay between cke set high and a non Read Command in number of cycles. Number of cycles is between 0 and 255. This field is used for SDR-SDRAM and DDR-SDRAM devices. In the case of SDR-SDRAM devices and Low-power DDR1-SDRAM, this field is equivalent to TXSR timing.

- **TXSRD: ExiT Self Refresh Delay to Read Command**

Reset Value is 200 cycles.

This field defines the delay between cke set high and a Read Command in number of cycles. Number of cycles is between 0 and 255 cycles.This field is unique to DDR-SDRAM devices. In the case of a Low-power DDR1-SDRAM, this field must be written to 0.

- **TXP: Exit Power-down Delay to First Command**

Reset Value is 3 cycles.

This field defines the delay between cke set high and a Valid Command in number of cycles. Number of cycles is between 0 and 15 cycles. This field is unique to Low-power DDR1-SDRAM devices and DDR2-SDRAM devices.

22.8.6 DDRSDRC Timing Parameter 2 Register

Name: DDRSDRC_TPR2

Address: 0xFFFFE614 (0), 0xFFFFE414 (1)

Access: Read-write

Reset: See Table 22-8

31	30	29	28	27	26	25	24
–	–	–	–	–	–	–	–

23	22	21	20	19	18	17	16
–	–	–	–	–	–	–	–

15	14	13	12	11	10	9	8
	TRTP			TRPA			

7	6	5	4	3	2	1	0
TXARDS				TXARD			

This register can only be written if the bit WPEN is cleared in "DDRSDRC Write Protect Mode Register" on page 269.

- **TXARD: Exit Active Power Down Delay to Read Command in Mode "Fast Exit".**

The Reset Value is 2 cycles.

This field defines the delay between cke set high and a Read Command in number of cycles. Number of cycles is between 0 and 15.

Note: This field is found only in DDR2-SDRAM devices.

- **TXARDS: Exit Active Power Down Delay to Read Command in Mode "Slow Exit".**

The Reset Value is 6 cycles.

This field defines the delay between cke set high and a Read Command in number of cycles. Number of cycles is between 0 and 15.

Note: This field is found only in DDR2-SDRAM devices.

- **TRPA: Row Precharge All Delay**

The Reset Value is 0 cycle.

This field defines the delay between a Precharge ALL banks Command and another command in number of cycles. Number of cycles is between 0 and 15.

Note: This field is found only in DDR2-SDRAM devices.

- **TRTP: Read to Precharge**

The Reset Value is 2 cycles.

This field defines the delay between Read Command and a Precharge command in number of cycle.

Number of cycles is between 0 and 7.

22.8.7 DDRSDRC Low-power Register

Name: DDRSDRC_LPR

Address: 0xFFFFE61C (0), 0xFFFFE41C (1)

Access: Read-write

Reset: See Table 22-8

31	30	29	28	27	26	25	24
–	–	–	–	–	–	–	–

23	22	21	20	19	18	17	16
–	–	UPD_MR		–	–	–	APDE

15	14	13	12	11	10	9	8
–	–	TIMEOUT		DS		TCR	

7	6	5	4	3	2	1	0
–	PASR				CLK_FR	LPCB	

- **LPCB: Low-power Command Bit**

Reset value is “00”.

00 = Low-power Feature is inhibited: no power-down, self refresh and Deep power mode are issued to the SDRAM device.

01 = The DDRSDRC issues a Self Refresh Command to the SDRAM device, the clock(s) is/are de-activated and the CKE signal is set low. The SDRAM device leaves the self refresh mode when accessed and enters it after the access.

10 = The DDRSDRC issues a Power-down Command to the SDRAM device after each access, the CKE signal is set low. The SDRAM device leaves the power-down mode when accessed and enters it after the access.

11 = The DDRSDRC issues a Deep Power-down Command to the Low-power SDRAM device.**This mode is unique to Low-power SDRAM devices.**

- **CLK_FR: Clock Frozen Command Bit**

Reset value is “0”.

This field sets the clock low during power-down mode or during deep power-down mode. Some SDRAM devices do not support freezing the clock during power-down mode or during deep power-down mode. Refer to the SDRAM device datasheet for details on this.

1 = Clock(s) is/are frozen.

0 = Clock(s) is/are not frozen.

- **PASR: Partial Array Self Refresh**

Reset value is “0”.

This field is unique to Low-power SDRAM. It is used to specify whether only one quarter, one half or all banks of the SDRAM array are enabled. Disabled banks are not refreshed in self refresh mode.

The values of this field are dependant on Low-power SDRAM devices.

After the initialization sequence, as soon as PASR field is modified, Extended Mode Register in the external device memory is accessed automatically and PASR bits are updated. In function of the UPD_MR bit, update is done before entering in self refresh mode or during a refresh command and a pending read or write access.

- **TCR: Temperature Compensated Self Refresh**

Reset value is “0”.

This field is unique to Low-power SDRAM. It is used to program the refresh interval during self refresh mode, depending on the case temperature of the low-power SDRAM.

The values of this field are dependent on Low-power SDRAM devices.

After the initialization sequence, as soon as TCR field is modified, Extended Mode Register is accessed automatically and TCR bits are updated. In function of UPD_MR bit, update is done before entering in self refresh mode or during a refresh command and a pending read or write access.

- **DS: Drive Strength**

Reset value is “0”.

This field is unique to Low-power SDRAM. It selects the driver strength of SDRAM output.

After the initialization sequence, as soon as DS field is modified, Extended Mode Register is accessed automatically and DS bits are updated. In function of UPD_MR bit, update is done before entering in self refresh mode or during a refresh command and a pending read or write access.

- **TIMEOUT: Low Power Mode**

Reset value is “00”.

This field defines when low-power mode is enabled.

00	The SDRAM controller activates the SDRAM low-power mode immediately after the end of the last transfer.
01	The SDRAM controller activates the SDRAM low-power mode 64 clock cycles after the end of the last transfer.
10	The SDRAM controller activates the SDRAM low-power mode 128 clock cycles after the end of the last transfer.
11	Reserved

- **APDE: Active Power Down Exit Time**

Reset value is “1”.

This mode is unique to DDR2-SDRAM devices. This mode allows to determine the active power-down mode, which determines performance versus power saving**.**

0 = Fast Exit

1 = Slow Exit

After the initialization sequence, as soon as APDE field is modified Extended Mode Register, located in the memory of the external device, is accessed automatically and APDE bits are updated. In function of the UPD_MR bit, update is done before entering in self refresh mode or during a refresh command and a pending read or write access

- **UPD_MR: Update Load Mode Register and Extended Mode Register**

Reset value is “0”.

This bit is used to enable or disable automatic update of the Load Mode Register and Extended Mode Register. This update is function of DDRSDRC integration in a system. DDRSDRC can either share or not share an external bus with another controller.

00	Update is disabled.
01	DDRSDRC shares external bus. Automatic update is done during a refresh command and a pending read or write access in SDRAM device.
10	DDRSDRC does not share external bus. Automatic update is done before entering in self refresh mode.
11	Reserved

22.8.8 DDRSDRC Memory Device Register

Name: DDRSDRC_MD

Address: 0xFFFFE620 (0), 0xFFFFE420 (1)

Access: Read-write

Reset: See Table 22-8

31	30	29	28	27	26	25	24
–	–	–	–	–	–	–	–

23	22	21	20	19	18	17	16
–	–	–	–	–	–	–	–

15	14	13	12	11	10	9	8
–	–	–	–	–	–	–	–

7	6	5	4	3	2	1	0
–	–	–	DBW	–	MD		

This register can only be written if the bit WPEN is cleared in "DDRSDRC Write Protect Mode Register" on page 269.

- **MD: Memory Device**

Indicates the type of memory used.

Reset value is for SDR-SDRAM device.

000 = SDR-SDRAM

001 = Low-power SDR-SDRAM

010 = Reserved

011 = Low-power DDR1-SDRAM

110 = DDR2-SDRAM

- **DBW: Data Bus Width**

Reset value is 16 bits.

0 = Data bus width is 32 bits (reserved for SDR-SDRAM device).

1 = Data bus width is 16 bits.

22.8.9 DDRSDRC DLL Register

Name: DDRSDRC_DLL

Address: 0xFFFFE624 (0), 0xFFFFE424 (1)

Access: Read-only

Reset: See Table 22-8

31	30	29	28	27	26	25	24
–	–	–	–	–	–	–	–

23	22	21	20	19	18	17	16
–	–	–	–	–	–	–	–

15	14	13	12	11	10	9	8
MDVAL							

7	6	5	4	3	2	1	0
–	–	–	–	–	MDOVF	MDDEC	MDINC

The DLL logic is internally used by the controller in order to delay DQS inputs. This is necessary to center the strobe time and the data valid window.

- **MDINC: DLL Master Delay Increment**

0 = The DLL is not incrementing the Master delay counter.

1 = The DLL is incrementing the Master delay counter.

- **MDDEC: DLL Master Delay Decrement**

0 = The DLL is not decrementing the Master delay counter.

1 = The DLL is decrementing the Master delay counter.

- **MDOVF: DLL Master Delay Overflow Flag**

0 = The Master delay counter has not reached its maximum value, or the Master is not locked yet.

1 = The Master delay counter has reached its maximum value, the Master delay counter increment is stopped and the DLL forces the Master lock. If this flag is set, it means the DDRSDRC clock frequency is too low compared to Master delay line number of elements.

- **MDVAL: DLL Master Delay Value**

Value of the Master delay counter.

22.8.10 DDRSDRC High Speed Register

Name: DDRSDRC_HS

Address: 0xFFFFE62C (0), 0xFFFFE42C (1)

Access: Read-write

Reset: See Table 22-8

31	30	29	28	27	26	25	24
–	–	–	–	–	–	–	–

23	22	21	20	19	18	17	16
–	–	–	–	–	–	–	–

15	14	13	12	11	10	9	8
–	–	–	–	–	–	–	–

7	6	5	4	3	2	1	0
–	–	–	–	–	DIS_ANTICIP_READ	–	–

This register can only be written if the bit WPEN is cleared in "DDRSDRC Write Protect Mode Register" on page 269.

- **DIS_ANTICIP_READ: Anticip Read Access**

0 = Anticip read access is enabled.

1 = Anticip read access is disabled (default).

DIS_ANTICIP_READ allows DDR2 read access optimization with multi-port.

As this feature is based on the "bank open policy", the software must map different buffers in different DDR2 banks to take advantage of that feature.

22.8.11 DDRSDRC DELAY I/O Register

Name: DDRSDRC_DELAYx [x=1..4]

Address: 0xFFFFE640 (0), 0xFFFFE440 (1)

Access: Read-write

Reset: See Table 22-8

31	30	29	28	27	26	25	24
DELAY8				DELAY7			

23	22	21	20	19	18	17	16
DELAY6				DELAY5			

15	14	13	12	11	10	9	8
DELAY4				DELAY3			

7	6	5	4	3	2	1	0
DELAY2				DELAY1			

- **DELAYx: Delay1..Delay8**

Gives the number of elements in the delay line.

22.8.12 DDRSDRC Write Protect Mode Register

Name: DDRSDRC_WPMR

Address: 0xFFFFE6E4 (0), 0xFFFFE4E4 (1)

Access: Read-write

Reset: See Table 22-8

31	30	29	28	27	26	25	24
WPKEY							

23	22	21	20	19	18	17	16
WPKEY							

15	14	13	12	11	10	9	8
WPKEY							

7	6	5	4	3	2	1	0
—	—	—	—	—	—	—	WPEN

- **WPEN: Write Protect Enable**

0 = Disables the Write Protect if WPKEY corresponds to 0x444452 (“DDR” in ASCII).

1 = Enables the Write Protect if WPKEY corresponds to 0x444452 (“DDR” in ASCII).

Protects the registers:

- “DDRSDRC Mode Register” on page 254
- “DDRSDRC Refresh Timer Register” on page 255
- “DDRSDRC Configuration Register” on page 256
- “DDRSDRC Timing Parameter 0 Register” on page 259
- “DDRSDRC Timing Parameter 1 Register” on page 261
- “DDRSDRC Timing Parameter 2 Register” on page 262
- “DDRSDRC Memory Device Register” on page 265
- “DDRSDRC High Speed Register” on page 267

- **WPKEY: Write Protect KEY**

Should be written at value 0x444452 (“DDR” in ASCII). Writing any other value in this field aborts the write operation of the WPEN bit. Always reads as 0.

22.8.13 DDRSDRC Write Protect Status Register

Name: DDRSDRC_WPSR

Address: 0xFFFFE6E8 (0), 0xFFFFE4E8 (1)

Access: Read-only

Reset: See Table 22-8

31	30	29	28	27	26	25	24
–	–	–	–	–	–	–	–

23	22	21	20	19	18	17	16
WPVSRC							

15	14	13	12	11	10	9	8
WPVSRC							

7	6	5	4	3	2	1	0
–	–	–	–	–	–	–	WPVS

- **WPVS: Write Protect Violation Status**

0 = No Write Protect Violation has occurred since the last read of the DDRSDRC_WPSR register.

1 = A Write Protect Violation has occurred since the last read of the DDRSDRC_WPSR register. If this violation is an unauthorized attempt to write a protected register, the associated violation is reported into field WPVSRC.

- **WPVSRC: Write Protect Violation Source**

When WPVS is active, this field indicates the write-protected register (through address offset or code) in which a write access has been attempted.

Note: Reading DDRSDRC_WPSR automatically clears all fields.

23. Error Corrected Code Controller (ECC)

23.1 Description

NAND Flash/SmartMedia devices contain by default invalid blocks which have one or more invalid bits. Over the NAND Flash/SmartMedia lifetime, additional invalid blocks may occur which can be detected/corrected by ECC code.

The ECC Controller is a mechanism that encodes data in a manner that makes possible the identification and correction of certain errors in data. The ECC controller is capable of single bit error correction and 2-bit random detection. When NAND Flash/SmartMedia have more than 2 bits of errors, the data cannot be corrected.

The ECC user interface is compliant with the ARM Advanced Peripheral Bus (APB rev2).

23.2 Block Diagram

Figure 23-1. Block Diagram

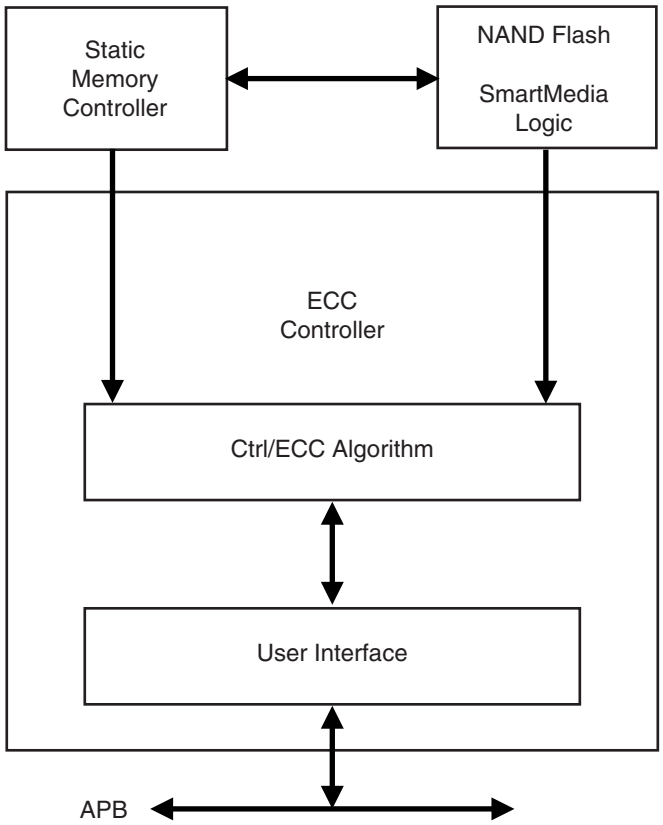

23.3 Functional Description

A page in NAND Flash and SmartMedia memories contains an area for main data and an additional area used for redundancy (ECC). The page is organized in 8-bit or 16-bit words. The page size corresponds to the number of words in the main area plus the number of words in the extra area used for redundancy.

Over time, some memory locations may fail to program or erase properly. In order to ensure that data is stored properly over the life of the NAND Flash device, NAND Flash providers recommend to utilize either 1 ECC per 256 bytes of data, 1 ECC per 512 bytes of data or 1 ECC for all of the page.

The only configurations required for ECC are the NAND Flash or the SmartMedia page size (528/2112/4224) and the type of correction wanted (1 ECC for all the page/1 ECC per 256 bytes of data /1 ECC per 512 bytes of data).

Page size is configured setting the PAGESIZE field in the ECC Mode Register (ECC_MR). Type of correction is configured setting the TYPeCORRECT field in the ECC Mode Register (ECC_MR).

ECC is automatically computed as soon as a read (00h)/write (80h) command to the NAND Flash or the SmartMedia is detected. Read and write access must start at a page boundary.

ECC results are available as soon as the counter reaches the end of the main area. Values in the ECC Parity Registers (ECC_PR0 to ECC_PR15) are then valid and locked until a new start condition occurs (read/write command followed by address cycles).

23.3.1 Write Access

Once the Flash memory page is written, the computed ECC codes are available in the ECC Parity (ECC_PR0 to ECC_PR15) registers. The ECC code values must be written by the software application in the extra area used for redundancy. The number of write accesses in the extra area is a function of the value of the type of correction field. For example, for 1 ECC per 256 bytes of data for a page of 512 bytes, only the values of ECC_PR0 and ECC_PR1 must be written by the software application. Other registers are meaningless.

23.3.2 Read Access

After reading the whole data in the main area, the application must perform read accesses to the extra area where ECC code has been previously stored. Error detection is automatically performed by the ECC controller. Please note that it is mandatory to read consecutively the entire main area and the locations where Parity and NParity values have been previously stored to let the ECC controller perform error detection.

The application can check the ECC Status Registers (ECC_SR1/ECC_SR2) for any detected errors. It is up to the application to correct any detected error. ECC computation can detect four different circumstances:

- No error: XOR between the ECC computation and the ECC code stored at the end of the NAND Flash or SmartMedia page is equal to 0. No error flags in the ECC Status Registers (ECC_SR1/ECC_SR2).
- Recoverable error: Only the RECERR flags in the ECC Status registers (ECC_SR1/ECC_SR2) are set. The corrupted word offset in the read page is defined by the WORDADDR field in the ECC Parity Registers (ECC_PR0 to ECC_PR15). The corrupted bit position in the concerned word is defined in the BITADDR field in the ECC Parity Registers (ECC_PR0 to ECC_PR15).
- ECC error: The ECCERR flag in the ECC Status Registers (ECC_SR1/ECC_SR2) are set. An error has been detected in the ECC code stored in the Flash memory. The position of the corrupted bit can be found by the application performing an XOR between the Parity and the NParity contained in the ECC code stored in the Flash memory.
- Non correctable error: The MULERR flag in the ECC Status Registers (ECC_SR1/ECC_SR2) are set. Several unrecoverable errors have been detected in the Flash memory page.

ECC Status Registers, ECC Parity Registers are cleared when a read/write command is detected or a software reset is performed.

For Single-bit Error Correction and Double-bit Error Detection (SEC-DED) hsiao code is used. 24-bit ECC is generated in order to perform one bit correction per 256 or 512 bytes for pages of 512/2048/4096 8-bit words. 32-bit ECC is generated in order to perform one bit correction per 512/1024/2048/4096 8- or 16-bit words.They are generated according to the schemes shown in Figure 23-2 and Figure 23-3.

Figure 23-2. Parity Generation for 512/1024/2048/4096 8-bit Words

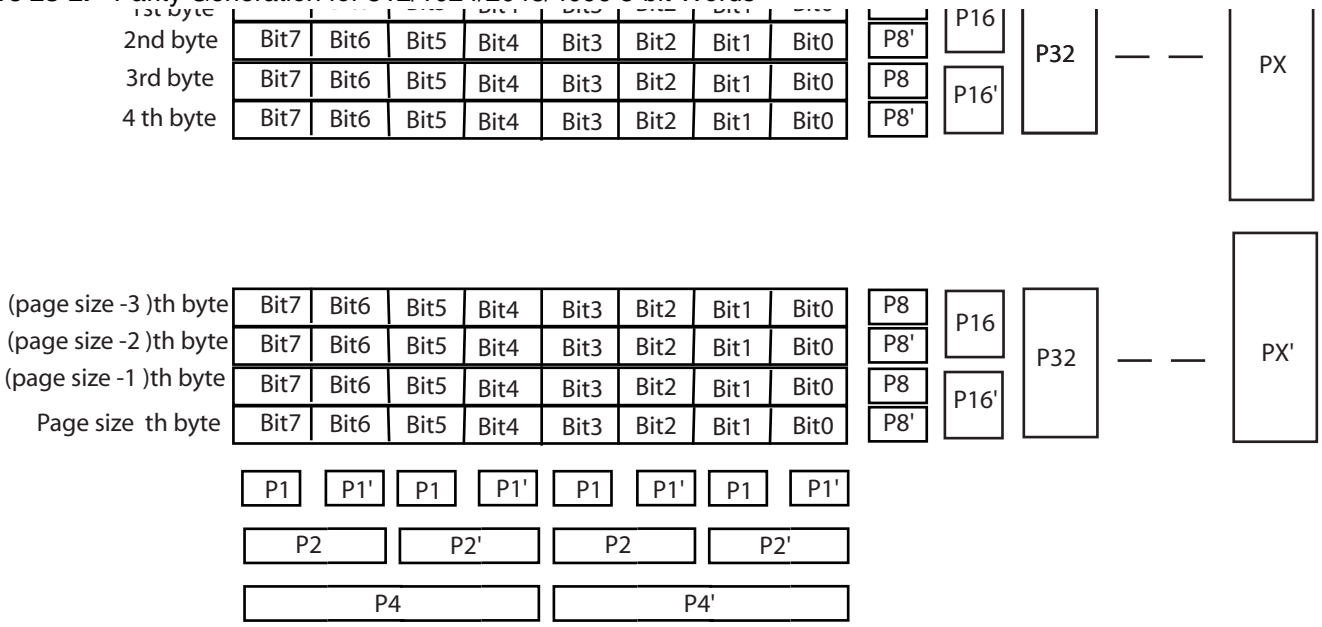

Page size = 512 Px = 2048
Page size = 1024 Px = 4096
Page size = 2048 Px = 8192
Page size = 4096 Px = 16384

P1=bit7(+)bit5(+)bit3(+)bit1(+)P1
P2=bit7(+)bit6(+)bit3(+)bit2(+)P2
P4=bit7(+)bit6(+)bit5(+)bit4(+)P4
P1'=bit6(+)bit4(+)bit2(+)bit0(+)P1'

To calculate P8' to PX' and P8 to PX, apply the algorithm that follows.

```
Page size = 2^n

  for i =0 to n
  begin
   for (j = 0 to page_size_byte)
   begin
    if(j[i] ==1)
     P[2^(i+3)]=bit7(+)bit6(+)bit5(+)bit4(+)bit3(+)
               bit2(+)bit1(+)bit0(+)P[2^(i+3)]
    else
     P[2^(i+3)]'=bit7(+)bit6(+)bit5(+)bit4(+)bit3(+)
                bit2(+)bit1(+)bit0(+)P[2^(i+3)]'
    end
  end
```

Figure 23-3. Parity Generation for 512/1024/2048/4096 16-bit Words

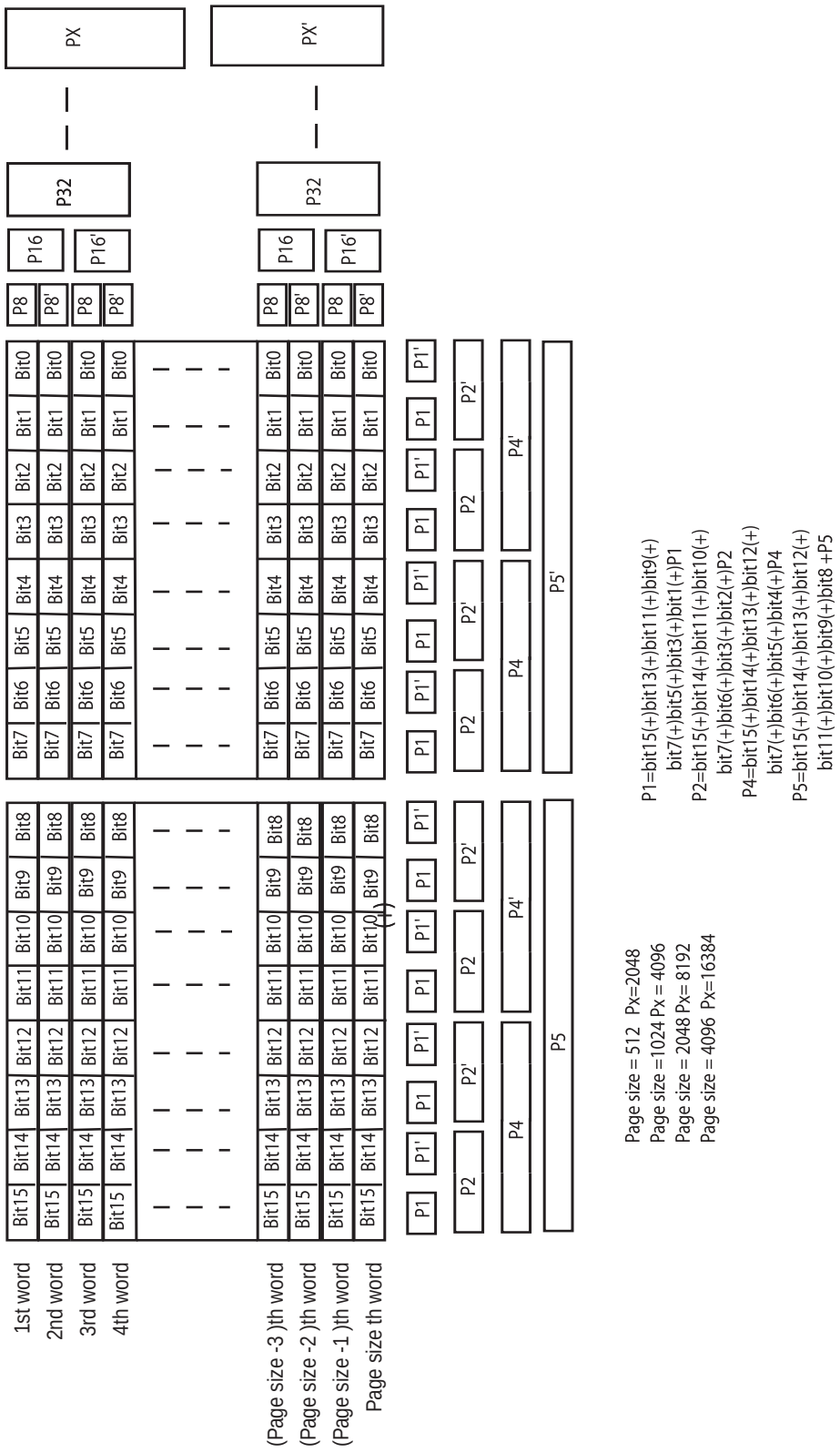

To calculate P8’ to PX’ and P8 to PX, apply the algorithm that follows.

```
Page size = 2^n

   for i =0 to n
   begin
    for (j = 0 to page_size_word)
    begin
     if(j[i] ==1)
      P[2^(i+3)]= bit15(+)bit14(+)bit13(+)bit12(+)
                  bit11(+)bit10(+)bit9(+)bit8(+)
                  bit7(+)bit6(+)bit5(+)bit4(+)bit3(+)
                  bit2(+)bit1(+)bit0(+)P[2^(n+3)]
     else
      P[2^(i+3)]'=bit15(+)bit14(+)bit13(+)bit12(+)
                  bit11(+)bit10(+)bit9(+)bit8(+)
                  bit7(+)bit6(+)bit5(+)bit4(+)bit3(+)
                  bit2(+)bit1(+)bit0(+)P[2^(i+3)]'
     end
   end
```

23.4 Error Corrected Code Controller (ECC) User Interface

Table 23-1. Register Mapping

Offset	Register	Name	Access	Reset
0x00	ECC Control Register	ECC_CR	Write-only	0x0
0x04	ECC Mode Register	ECC_MR	Read-write	0x0
0x08	ECC Status1 Register	ECC_SR1	Read-only	0x0
0x0C	ECC Parity Register 0	ECC_PR0	Read-only	0x0
0x10	ECC Parity Register 1	ECC_PR1	Read-only	0x0
0x14	ECC Status2 Register	ECC_SR2	Read-only	0x0
0x18	ECC Parity 2	ECC_PR2	Read-only	0x0
0x1C	ECC Parity 3	ECC_PR3	Read-only	0x0
0x20	ECC Parity 4	ECC_PR4	Read-only	0x0
0x24	ECC Parity 5	ECC_PR5	Read-only	0x0
0x28	ECC Parity 6	ECC_PR6	Read-only	0x0
0x2C	ECC Parity 7	ECC_PR7	Read-only	0x0
0x30	ECC Parity 8	ECC_PR8	Read-only	0x0
0x34	ECC Parity 9	ECC_PR9	Read-only	0x0
0x38	ECC Parity 10	ECC_PR10	Read-only	0x0
0x3C	ECC Parity 11	ECC_PR11	Read-only	0x0
0x40	ECC Parity 12	ECC_PR12	Read-only	0x0
0x44	ECC Parity 13	ECC_PR13	Read-only	0x0
0x48	ECC Parity 14	ECC_PR14	Read-only	0x0
0x4C	ECC Parity 15	ECC_PR15	Read-only	0x0

23.4.1 ECC Control Register

Name: ECC_CR

Access Type: Write-only

31	30	29	28	27	26	25	24
–	–	–	–	–	–	–	–
23	22	21	20	19	18	17	16
–	–	–	–	–	–	–	–
15	14	13	12	11	10	9	8
–	–	–	–	–	–	–	–
7	6	5	4	3	2	1	0
–	–	–	–	–	–	SRST	RST

- **RST: RESET Parity**

Provides reset to current ECC by software.

1: Reset ECC Parity registers

0: No effect

- **SRST: Soft Reset**

Provides soft reset to ECC block

1: Resets all registers.

0: No effect.

23.4.2 ECC Mode Register

Register Name: ECC_MR

Access Type: Read-write

31	30	29	28	27	26	25	24
–	–	–	–	–	–	–	–
23	22	21	20	19	18	17	16
–	–	–	–	–	–	–	–
15	14	13	12	11	10	9	8
–	–	–	–	–	–	–	–
7	6	5	4	3	2	1	0
–	–	TYPECORRECT		–	–	PAGESIZE	

- **PAGESIZE: Page Size**

This field defines the page size of the NAND Flash device.

Page Size	Description
00	528 words
01	1056 words
10	2112 words
11	4224 words

A word has a value of 8 bits or 16 bits, depending on the NAND Flash or SmartMedia memory organization.

- **TYPECORRECT: Type of Correction**

00: 1 bit correction for a page size of 512/1024/2048/4096 bytes.

01: 1 bit correction for 256 bytes of data for a page size of 512/2048/4096 bytes.

10: 1 bit correction for 512 bytes of data for a page size of 512/2048/4096 bytes.

23.4.3 ECC Status Register 1

Register Name: ECC_SR1

Access Type: Read-only

31	30	29	28	27	26	25	24
–	MULERR7	ECCERR7	RECERR7	–	MULERR6	ECCERR6	RECERR6
23	22	21	20	19	18	17	16
–	MULERR5	ECCERR5	RECERR5	–	MULERR4	ECCERR4	RECERR4
15	14	13	12	11	10	9	8
–	MULERR3	ECCERR3	RECERR3	–	MULERR2	ECCERR2	RECERR2
7	6	5	4	3	2	1	0
–	MULERR1	ECCERR1	RECERR1	–	MULERR0	ECCERR0	RECERR0

- **RECERR0: Recoverable Error**

0 = No Errors Detected.

1 = Errors Detected. If MUL_ERROR is 0, a single correctable error was detected. Otherwise multiple uncorrected errors were detected.

- **ECCERR0: ECC Error**

0 = No Errors Detected.

1 = A single bit error occurred in the ECC bytes.

If TYPECORRECT = 0, read both ECC Parity 0 and ECC Parity 1 registers, the error occurred at the location which contains a 1 in the least significant 16 bits; else read ECC Parity 0 register, the error occurred at the location which contains a 1 in the least significant 24 bits.

- **MULERR0: Multiple Error**

0 = No Multiple Errors Detected.

1 = Multiple Errors Detected.

- **RECERR1: Recoverable Error in the page between the 256th and the 511th bytes or the 512th and the 1023rd bytes**

Fixed to 0 if TYPECORREC = 0.

0 = No Errors Detected.

1 = Errors Detected. If MUL_ERROR is 0, a single correctable error was detected. Otherwise multiple uncorrected errors were detected.

- **ECCERR1: ECC Error in the page between the 256th and the 511th bytes or the 512th and the 1023rd bytes**

Fixed to 0 if TYPECORREC = 0

0 = No Errors Detected.

1 = A single bit error occurred in the ECC bytes.

Read ECC Parity 1 register, the error occurred at the location which contains a 1 in the least significant 24 bits.

- **MULERR1: Multiple Error in the page between the 256th and the 511th bytes or the 512th and the 1023rd bytes**

Fixed to 0 if TYPECORREC = 0.

0 = No Multiple Errors Detected.

1 = Multiple Errors Detected.

- **RECERR2: Recoverable Error in the page between the 512th and the 767th bytes or the 1024th and the 1535th bytes**

Fixed to 0 if TYPECORREC = 0.

0 = No Errors Detected.

1 = Errors Detected. If MUL_ERROR is 0, a single correctable error was detected. Otherwise, multiple uncorrected errors were detected.

- **ECCERR2: ECC Error in the page between the 512th and the 767th bytes or the 1024th and the 1535th bytes**

Fixed to 0 if TYPECORREC = 0.

0 = No Errors Detected.

1 = A single bit error occurred in the ECC bytes.

Read ECC Parity 2 register, the error occurred at the location which contains a 1 in the least significant 24 bits.

- **MULERR2: Multiple Error in the page between the 512th and the 767th bytes or the 1024th and the 1535th bytes**

Fixed to 0 if TYPECORREC = 0.

0 = No Multiple Errors Detected.

1 = Multiple Errors Detected.

- **RECERR3: Recoverable Error in the page between the 768th and the 1023rd bytes or the 1536th and the 2047th bytes**

Fixed to 0 if TYPECORREC = 0.

0 = No Errors Detected.

1 = Errors Detected. If MUL_ERROR is 0, a single correctable error was detected. Otherwise multiple uncorrected errors were detected.

- **ECCERR3: ECC Error in the page between the 768th and the 1023rd bytes or the 1536th and the 2047th bytes**

Fixed to 0 if TYPECORREC = 0.

0 = No Errors Detected.

1 = A single bit error occurred in the ECC bytes.

Read ECC Parity 3 register, the error occurred at the location which contains a 1 in the least significant 24 bits.

- **MULERR3: Multiple Error in the page between the 768th and the 1023rd bytes or the 1536th and the 2047th bytes**

Fixed to 0 if TYPECORREC = 0.

0 = No Multiple Errors Detected.

1 = Multiple Errors Detected.

- **RECERR4: Recoverable Error in the page between the 1024th and the 1279th bytes or the 2048th and the 2559th bytes**

Fixed to 0 if TYPECORREC = 0.

0 = No Errors Detected.

1 = Errors Detected. If MUL_ERROR is 0, a single correctable error was detected. Otherwise multiple uncorrected errors were detected.

- **ECCERR4: ECC Error in the page between the 1024th and the 1279th bytes or the 2048th and the 2559th bytes**

Fixed to 0 if TYPECORREC = 0.

0 = No Errors Detected.

1 = A single bit error occurred in the ECC bytes.

Read ECC Parity 4 register, the error occurred at the location which contains a 1 in the least significant 24 bits.

- **MULERR4: Multiple Error in the page between the 1024th and the 1279th bytes or the 2048th and the 2559th bytes**

Fixed to 0 if TYPECORREC = 0.

0 = No Multiple Errors Detected.

1 = Multiple Errors Detected.

- **RECERR5: Recoverable Error in the page between the 1280th and the 1535th bytes or the 2560th and the 3071st bytes**

Fixed to 0 if TYPECORREC = 0.

0 = No Errors Detected.

1 = Errors Detected. If MUL_ERROR is 0, a single correctable error was detected. Otherwise multiple uncorrected errors were detected

- **ECCERR5: ECC Error in the page between the 1280th and the 1535th bytes or the 2560th and the 3071st bytes**

Fixed to 0 if TYPECORREC = 0.

0 = No Errors Detected.

1 = A single bit error occurred in the ECC bytes.

Read ECC Parity 5 register, the error occurred at the location which contains a 1 in the least significant 24 bits.

- **MULERR5: Multiple Error in the page between the 1280th and the 1535th bytes or the 2560th and the 3071st bytes**

Fixed to 0 if TYPECORREC = 0.

0 = No Multiple Errors Detected.

1 = Multiple Errors Detected.

- **RECERR6: Recoverable Error in the page between the 1536th and the 1791st bytes or the 3072nd and the 3583rd bytes**

Fixed to 0 if TYPECORREC = 0.

0 = No Errors Detected.

1 = Errors Detected. If MUL_ERROR is 0, a single correctable error was detected. Otherwise multiple uncorrected errors were detected.

- **ECCERR6: ECC Error in the page between the 1536th and the 1791st bytes or the 3072nd and the 3583rd bytes**

Fixed to 0 if TYPECORREC = 0.

0 = No Errors Detected.

1 = A single bit error occurred in the ECC bytes.

Read ECC Parity 6 register, the error occurred at the location which contains a 1 in the least significant 24 bits.

- **MULERR6: Multiple Error in the page between the 1536th and the 1791st bytes or the 3072nd and the 3583rd bytes**

Fixed to 0 if TYPECORREC = 0.

0 = No Multiple Errors Detected.

1 = Multiple Errors Detected.

- **RECERR7: Recoverable Error in the page between the 1792nd and the 2047th bytes or the 3584th and the 4095th bytes**

Fixed to 0 if TYPECORREC = 0.

0 = No Errors Detected.

1 = Errors Detected. If MUL_ERROR is 0, a single correctable error was detected. Otherwise, multiple uncorrected errors were detected.

- **ECCERR7: ECC Error in the page between the 1792nd and the 2047th bytes or the 3584th and the 4095th bytes**

Fixed to 0 if TYPECORREC = 0.

0 = No Errors Detected.

1 = A single bit error occurred in the ECC bytes.

Read ECC Parity 7 register, the error occurred at the location which contains a 1 in the least significant 24 bits.

- **MULERR7: Multiple Error in the page between the 1792nd and the 2047th bytes or the 3584th and the 4095th bytes**

Fixed to 0 if TYPECORREC = 0.

0 = No Multiple Errors Detected.

1 = Multiple Errors Detected.

23.4.4 ECC Status Register 2

Register Name: ECC_SR2

Access Type: Read-only

31	30	29	28	27	26	25	24
–	MULERR15	ECCERR15	RECERR15	–	MULERR14	ECCERR14	RECERR14
23	22	21	20	19	18	17	16
–	MULERR13	ECCERR13	RECERR13	–	MULERR12	ECCERR12	RECERR12
15	14	13	12	11	10	9	8
–	MULERR11	ECCERR11	RECERR11	–	MULERR10	ECCERR10	RECERR10
7	6	5	4	3	2	1	0
–	MULERR9	ECCERR9	RECERR9	–	MULERR8	ECCERR8	RECERR8

- **RECERR8: Recoverable Error in the page between the 2048th and the 2303rd bytes**

Fixed to 0 if TYPECORREC = 0.

0 = No Errors Detected.

1 = Errors Detected. If MUL_ERROR is 0, a single correctable error was detected. Otherwise multiple uncorrected errors were detected

- **ECCERR8: ECC Error in the page between the 2048th and the 2303rd bytes**

Fixed to 0 if TYPECORREC = 0.

0 = No Errors Detected.

1 = A single bit error occurred in the ECC bytes.

Read ECC Parity 8 register, the error occurred at the location which contains a 1 in the least significant 24 bits.

- **MULERR8: Multiple Error in the page between the 2048th and the 2303rd bytes**

Fixed to 0 if TYPECORREC = 0.

0 = No Multiple Errors Detected.

1 = Multiple Errors Detected.

- **RECERR9: Recoverable Error in the page between the 2304th and the 2559th bytes**

Fixed to 0 if TYPECORREC = 0.

0 = No Errors Detected.

1 = Errors Detected. If MUL_ERROR is 0, a single correctable error was detected. Otherwise multiple uncorrected errors were detected.

- **ECCERR9: ECC Error in the page between the 2304th and the 2559th bytes**

Fixed to 0 if TYPECORREC = 0.

0 = No Errors Detected.

1 = A single bit error occurred in the ECC bytes.

Read ECC Parity 9 register, the error occurred at the location which contains a 1 in the least significant 24 bits.

- **MULERR9: Multiple Error in the page between the 2304th and the 2559th bytes**

Fixed to 0 if TYPECORREC = 0.

0 = No Multiple Errors Detected.

1 = Multiple Errors Detected.

- **RECERR10: Recoverable Error in the page between the 2560th and the 2815th bytes**

Fixed to 0 if TYPECORREC = 0.

0 = No Errors Detected.

1 = Errors Detected. If MUL_ERROR is 0, a single correctable error was detected. Otherwise, multiple uncorrected errors were detected.

- **ECCERR10: ECC Error in the page between the 2560th and the 2815th bytes**

Fixed to 0 if TYPECORREC = 0.

0 = No Errors Detected.

1 = A single bit error occurred in the ECC bytes.

Read ECC Parity 10 register, the error occurred at the location which contains a 1 in the least significant 24 bits.

- **MULERR10: Multiple Error in the page between the 2560th and the 2815th bytes**

Fixed to 0 if TYPECORREC = 0.

0 = No Multiple Errors Detected.

1 = Multiple Errors Detected.

- **RECERR11: Recoverable Error in the page between the 2816th and the 3071st bytes**

Fixed to 0 if TYPECORREC = 0.

0 = No Errors Detected.

1 = Errors Detected. If MUL_ERROR is 0, a single correctable error was detected. Otherwise, multiple uncorrected errors were detected

- **ECCERR11: ECC Error in the page between the 2816th and the 3071st bytes**

Fixed to 0 if TYPECORREC = 0.

0 = No Errors Detected.

1 = A single bit error occurred in the ECC bytes.

Read ECC Parity 11 register, the error occurred at the location which contains a 1 in the least significant 24 bits.

- **MULERR11: Multiple Error in the page between the 2816th and the 3071st bytes**

Fixed to 0 if TYPECORREC = 0.

0 = No Multiple Errors Detected.

1 = Multiple Errors Detected.

- **RECERR12: Recoverable Error in the page between the 3072nd and the 3327th bytes**

Fixed to 0 if TYPECORREC = 0

0 = No Errors Detected

1 = Errors Detected. If MUL_ERROR is 0, a single correctable error was detected. Otherwise multiple uncorrected errors were detected

- **ECCERR12: ECC Error in the page between the 3072nd and the 3327th bytes**

Fixed to 0 if TYPECORREC = 0

0 = No Errors Detected

1 = A single bit error occurred in the ECC bytes.

Read ECC Parity 12 register, the error occurred at the location which contains a 1 in the least significant 24 bits.

- **MULERR12: Multiple Error in the page between the 3072nd and the 3327th bytes**

Fixed to 0 if TYPECORREC = 0.

0 = No Multiple Errors Detected.

1 = Multiple Errors Detected.

- **RECERR13: Recoverable Error in the page between the 3328th and the 3583rd bytes**

Fixed to 0 if TYPECORREC = 0.

0 = No Errors Detected.

1 = Errors Detected. If MUL_ERROR is 0, a single correctable error was detected. Otherwise multiple uncorrected errors were detected.

- **ECCERR13: ECC Error in the page between the 3328th and the 3583rd bytes**

Fixed to 0 if TYPECORREC = 0.

0 = No Errors Detected.

1 = A single bit error occurred in the ECC bytes.

Read ECC Parity 13 register, the error occurred at the location which contains a 1 in the least significant 24 bits.

- **MULERR13: Multiple Error in the page between the 3328th and the 3583rd bytes**

Fixed to 0 if TYPECORREC = 0.

0 = No Multiple Errors Detected.

1 = Multiple Errors Detected.

- **RECERR14: Recoverable Error in the page between the 3584th and the 3839th bytes**

Fixed to 0 if TYPECORREC = 0.

0 = No Errors Detected.

1 = Errors Detected. If MUL_ERROR is 0, a single correctable error was detected. Otherwise, multiple uncorrected errors were detected.

- **ECCERR14: ECC Error in the page between the 3584th and the 3839th bytes**

Fixed to 0 if TYPECORREC = 0.

0 = No Errors Detected.

1 = A single bit error occurred in the ECC bytes.

Read ECC Parity 14 register, the error occurred at the location which contains a 1 in the least significant 24 bits.

- **MULERR14: Multiple Error in the page between the 3584th and the 3839th bytes**

Fixed to 0 if TYPECORREC = 0.

0 = No Multiple Errors Detected.

1 = Multiple Errors Detected.

- **RECERR15: Recoverable Error in the page between the 3840th and the 4095th bytes**

Fixed to 0 if TYPECORREC = 0.

0 = No Errors Detected.

1 = Errors Detected. If MUL_ERROR is 0, a single correctable error was detected. Otherwise, multiple uncorrected errors were detected

- **ECCERR15: ECC Error in the page between the 3840th and the 4095th bytes**

Fixed to 0 if TYPECORREC = 0

0 = No Errors Detected.

1 = A single bit error occurred in the ECC bytes.

Read ECC Parity 15 register, the error occurred at the location which contains a 1 in the least significant 24 bits.

- **MULERR15: Multiple Error in the page between the 3840th and the 4095th bytes**

Fixed to 0 if TYPECORREC = 0.

0 = No Multiple Errors Detected.

1 = Multiple Errors Detected.

23.5 Registers for 1 ECC for a page of 512/1024/2048/4096 bytes

23.5.1 ECC Parity Register 0

Register Name: ECC_PR0

Access Type: Read-only

31	30	29	28	27	26	25	24
–	–	–	–	–	–	–	–
23	22	21	20	19	18	17	16
–	–	–	–	–	–	–	–
15	14	13	12	11	10	9	8
WORDADDR							
7	6	5	4	3	2	1	0
WORDADDR				BITADDR			

Once the entire main area of a page is written with data, the register content must be stored at any free location of the spare area.

- **BITADDR: Bit Address**

During a page read, this value contains the corrupted bit offset where an error occurred, if a single error was detected. If multiple errors were detected, this value is meaningless.

- **WORDADDR: Word Address**

During a page read, this value contains the word address (8-bit or 16-bit word depending on the memory plane organization) where an error occurred, if a single error was detected. If multiple errors were detected, this value is meaningless.

23.5.2 ECC Parity Register 1

Register Name: ECC_PR1

Access Type: Read-only

31	30	29	28	27	26	25	24
–	–	–	–	–	–	–	–
23	22	21	20	19	18	17	16
–	–	–	–	–	–	–	–
15	14	13	12	11	10	9	8
NPARITY							
7	6	5	4	3	2	1	0
NPARITY							

- **NPARITY:**

Parity N

23.6 Registers for 1 ECC per 512 bytes for a page of 512/2048/4096 bytes, 8-bit word

23.6.1 ECC Parity Register 0

Register Name: ECC_PR0

Access Type: Read-only

31	30	29	28	27	26	25	24
–	–	–	–	–	–	–	–
23	22	21	20	19	18	17	16
NPARITY0							
15	14	13	12	11	10	9	8
NPARITY0				WORDADD0			
7	6	5	4	3	2	1	0
WORDADDR0					BITADDR0		

Once the entire main area of a page is written with data, the register content must be stored at any free location of the spare area.

- **BITADDR0: corrupted Bit Address in the page between the first byte and the 511th bytes**

During a page read, this value contains the corrupted bit offset where an error occurred, if a single error was detected. If multiple errors were detected, this value is meaningless.

- **WORDADDR0: corrupted Word Address in the page between the first byte and the 511th bytes**

During a page read, this value contains the word address (8-bit word) where an error occurred, if a single error was detected. If multiple errors were detected, this value is meaningless.

- **NPARITY0:**

Parity N

23.6.2 ECC Parity Register 1

Register Name: ECC_PR1

Access Type: Read-only

31	30	29	28	27	26	25	24
–	–	–	–	–	–	–	–
23	22	21	20	19	18	17	16
NPARITY1							
15	14	13	12	11	10	9	8
NPARITY1				WORDADD1			
7	6	5	4	3	2	1	0
WORDADDR1					BITADDR1		

Once the entire main area of a page is written with data, the register content must be stored at any free location of the spare area.

- **BITADDR1: corrupted Bit Address in the page between the 512th and the 1023rd bytes**

During a page read, this value contains the corrupted bit offset where an error occurred, if a single error was detected. If multiple errors were detected, this value is meaningless.

- **WORDADDR1: corrupted Word Address in the page between the 512th and the 1023rd bytes**

During a page read, this value contains the word address (8-bit word) where an error occurred, if a single error was detected. If multiple errors were detected, this value is meaningless.

- **NPARITY1:**

Parity N

23.6.3 ECC Parity Register 2

Register Name: ECC_PR2

Access Type: Read-only

31	30	29	28	27	26	25	24
–	–	–	–	–	–	–	–
23	22	21	20	19	18	17	16
NPARITY2							
15	14	13	12	11	10	9	8
NPARITY2				WORDADDR2			
7	6	5	4	3	2	1	0
WORDADDR2					BITADDR2		

Once the entire main area of a page is written with data, the register content must be stored at any free location of the spare area.

- **BITADDR2: corrupted Bit Address in the page between the 1023rd and the 1535th bytes**

During a page read, this value contains the corrupted bit offset where an error occurred, if a single error was detected. If multiple errors were detected, this value is meaningless.

- **WORDADDR2: corrupted Word Address in the page in the page between the 1023rd and the 1535th bytes**

During a page read, this value contains the word address (8-bit word) where an error occurred, if a single error was detected. If multiple errors were detected, this value is meaningless.

- **NPARITY2:**

Parity N

23.6.4 ECC Parity Register 3

Register Name: ECC_PR3

Access Type: Read-only

31	30	29	28	27	26	25	24
–	–	–	–	–	–	–	–
23	22	21	20	19	18	17	16
NPARITY3							
15	14	13	12	11	10	9	8
NPARITY3				WORDADDR3			
7	6	5	4	3	2	1	0
WORDADDR3					BITADDR3		

Once the entire main area of a page is written with data, the register content must be stored at any free location of the spare area.

- **BITADDR3: corrupted Bit Address in the page between the1536th and the 2047th bytes**

During a page read, this value contains the corrupted bit offset where an error occurred, if a single error was detected. If multiple errors were detected, this value is meaningless.

- **WORDADDR3 corrupted Word Address in the page between the 1536th and the 2047th bytes**

During a page read, this value contains the word address (8-bit word) where an error occurred, if a single error was detected. If multiple errors were detected, this value is meaningless.

- **NPARITY3**

Parity N

23.6.5 ECC Parity Register 4

Register Name: ECC_PR4

Access Type: Read-only

31	30	29	28	27	26	25	24
–	–	–	–	–	–	–	–
23	22	21	20	19	18	17	16
NPARITY4							
15	14	13	12	11	10	9	8
NPARITY4				WORDADDR4			
7	6	5	4	3	2	1	0
WORDADDR4					BITADDR4		

Once the entire main area of a page is written with data, the register content must be stored at any free location of the spare area.

- **BITADDR4: corrupted Bit Address in the page between the 2048th and the 2559th bytes**

During a page read, this value contains the corrupted bit offset where an error occurred, if a single error was detected. If multiple errors were detected, this value is meaningless.

- **WORDADDR4: corrupted Word Address in the page between the 2048th and the 2559th bytes**

During a page read, this value contains the word address (8-bit word) where an error occurred, if a single error was detected. If multiple errors were detected, this value is meaningless.

- **NPARITY4:**

Parity N

23.6.6 ECC Parity Register 5

Register Name: ECC_PR5

Access Type: Read-only

31	30	29	28	27	26	25	24
–	–	–	–	–	–	–	–
23	22	21	20	19	18	17	16
NPARITY5							
15	14	13	12	11	10	9	8
NPARITY5				WORDADDR5			
7	6	5	4	3	2	1	0
WORDADDR5					BITADDR5		

Once the entire main area of a page is written with data, the register content must be stored at any free location of the spare area.

- **BITADDR5: corrupted Bit Address in the page between the 2560th and the 3071st bytes**

During a page read, this value contains the corrupted bit offset where an error occurred, if a single error was detected. If multiple errors were detected, this value is meaningless.

- **WORDADDR5: corrupted Word Address in the page between the 2560th and the 3071st bytes**

During a page read, this value contains the word address (8-bit word) where an error occurred, if a single error was detected. If multiple errors were detected, this value is meaningless.

- **NPARITY5:**

Parity N

23.6.7 ECC Parity Register 6

Register Name: ECC_PR6

Access Type: Read-only

31	30	29	28	27	26	25	24
–	–	–	–	–	–	–	–
23	22	21	20	19	18	17	16
NPARITY6							
15	14	13	12	11	10	9	8
NPARITY6				WORDADDR6			
7	6	5	4	3	2	1	0
WORDADDR6					BITADDR6		

Once the entire main area of a page is written with data, the register content must be stored at any free location of the spare area.

- **BITADDR6: corrupted Bit Address in the page between the 3072nd and the 3583rd bytes**

During a page read, this value contains the corrupted bit offset where an error occurred, if a single error was detected. If multiple errors were detected, this value is meaningless.

- **WORDADDR6: corrupted Word Address in the page between the 3072nd and the 3583rd bytes**

During a page read, this value contains the word address (8-bit word) where an error occurred, if a single error was detected. If multiple errors were detected, this value is meaningless.

- **NPARITY6:**

Parity N

23.6.8 ECC Parity Register 7

Register Name: ECC_PR7

Access Type: Read-only

31	30	29	28	27	26	25	24
–	–	–	–	–	–	–	–
23	22	21	20	19	18	17	16
NPARITY7							
15	14	13	12	11	10	9	8
NPARITY7				WORDADDR7			
7	6	5	4	3	2	1	0
WORDADDR7					BITADDR7		

Once the entire main area of a page is written with data, the register content must be stored at any free location of the spare area.

- **BITADDR7: corrupted Bit Address in the page between the 3584h and the 4095th bytes**

During a page read, this value contains the corrupted bit offset where an error occurred, if a single error was detected. If multiple errors were detected, this value is meaningless.

- **WORDADDR7: corrupted Word Address in the page between the 3584th and the 4095th bytes**

During a page read, this value contains the word address (8-bit word) where an error occurred, if a single error was detected. If multiple errors were detected, this value is meaningless.

- **NPARITY7:**

Parity N

23.7 Registers for 1 ECC per 256 bytes for a page of 512/2048/4096 bytes, 8-bit word

23.7.1 ECC Parity Register 0

Register Name: ECC_PR0

Access Type: Read-only

31	30	29	28	27	26	25	24
–	–	–	–	–	–	–	–
23	22	21	20	19	18	17	16
0	NPARITY0						
15	14	13	12	11	10	9	8
NPARITY0				0	WORDADDR0		
7	6	5	4	3	2	1	0
WORDADDR0					BITADDR0		

Once the entire main area of a page is written with data, the register content must be stored at any free location of the spare area.

- **BITADDR0: corrupted Bit Address in the page between the first byte and the 255th bytes**

During a page read, this value contains the corrupted bit offset where an error occurred, if a single error was detected. If multiple errors were detected, this value is meaningless.

- **WORDADDR0: corrupted Word Address in the page between the first byte and the 255th bytes**

During a page read, this value contains the word address (8-bit word) where an error occurred, if a single error was detected. If multiple errors were detected, this value is meaningless.

- **NPARITY0:**

Parity N

23.7.2 ECC Parity Register 1

Register Name: ECC_PR1

Access Type: Read-only

31	30	29	28	27	26	25	24
–	–	–	–	–	–	–	–
23	22	21	20	19	18	17	16
0	NPARITY1						
15	14	13	12	11	10	9	8
NPARITY1				0	WORDADDR1		
7	6	5	4	3	2	1	0
WORDADDR1					BITADDR1		

Once the entire main area of a page is written with data, the register content must be stored at any free location of the spare area

- **BITADDR1: corrupted Bit Address in the page between the 256th and the 511th bytes**

During a page read, this value contains the corrupted bit offset where an error occurred, if a single error was detected. If multiple errors were detected, this value is meaningless.

- **WORDADDR1: corrupted Word Address in the page between the 256th and the 511th bytes**

During a page read, this value contains the word address (8-bit word) where an error occurred, if a single error was detected. If multiple errors were detected, this value is meaningless.

- **NPARITY1:**

Parity N

23.7.3 ECC Parity Register 2

Register Name: ECC_PR2

Access Type: Read-only

31	30	29	28	27	26	25	24
–	–	–	–	–	–	–	–
23	22	21	20	19	18	17	16
0	NPARITY2						
15	14	13	12	11	10	9	8
NPARITY2				0	WORDADD2		
7	6	5	4	3	2	1	0
WORDADDR2					BITADDR2		

Once the entire main area of a page is written with data, the register content must be stored at any free location of the spare area.

- **BITADDR2: corrupted Bit Address in the page between the 512th and the 767th bytes**

During a page read, this value contains the corrupted bit offset where an error occurred, if a single error was detected. If multiple errors were detected, this value is meaningless.

- **WORDADDR2: corrupted Word Address in the page between the 512th and the 767th bytes**

During a page read, this value contains the word address (8-bit word) where an error occurred, if a single error was detected. If multiple errors were detected, this value is meaningless.

- **NPARITY2:**

Parity N

23.7.4 ECC Parity Register 3

Register Name: ECC_PR3

Access Type: Read-only

31	30	29	28	27	26	25	24
–	–	–	–	–	–	–	–
23	22	21	20	19	18	17	16
0	NPARITY3						
15	14	13	12	11	10	9	8
NPARITY3				0	WORDADDR3		
7	6	5	4	3	2	1	0
WORDADDR3					BITADDR3		

Once the entire main area of a page is written with data, the register content must be stored at any free location of the spare area.

- **BITADDR3: corrupted Bit Address in the page between the 768th and the 1023rd bytes**

During a page read, this value contains the corrupted bit offset where an error occurred, if a single error was detected. If multiple errors were detected, this value is meaningless.

- **WORDADDR3: corrupted Word Address in the page between the 768th and the 1023rd bytes**

During a page read, this value contains the word address (8-bit word) where an error occurred, if a single error was detected. If multiple errors were detected, this value is meaningless

- **NPARITY3:**

Parity N

23.7.5 ECC Parity Register 4

Register Name: ECC_PR4

Access Type: Read-only

31	30	29	28	27	26	25	24
–	–	–	–	–	–	–	–
23	22	21	20	19	18	17	16
0	NPARITY4						
15	14	13	12	11	10	9	8
NPARITY4				0	WORDADDR4		
7	6	5	4	3	2	1	0
WORDADDR4					BITADDR4		

Once the entire main area of a page is written with data, the register content must be stored at any free location of the spare area

- **BITADDR4: corrupted bit address in the page between the 1024th and the 1279th bytes**

During a page read, this value contains the corrupted bit offset where an error occurred, if a single error was detected. If multiple errors were detected, this value is meaningless.

- **WORDADDR4: corrupted word address in the page between the 1024th and the 1279th bytes**

During a page read, this value contains the word address (8-bit word) where an error occurred, if a single error was detected. If multiple errors were detected, this value is meaningless.

- **NPARITY4**

Parity N

23.7.6 ECC Parity Register 5

Register Name: ECC_PR5

Access Type: Read-only

31	30	29	28	27	26	25	24
–	–	–	–	–	–	–	–
23	22	21	20	19	18	17	16
0	NPARITY5						
15	14	13	12	11	10	9	8
NPARITY5				0	WORDADDR5		
7	6	5	4	3	2	1	0
WORDADDR5					BITADDR5		

Once the entire main area of a page is written with data, the register content must be stored at any free location of the spare area.

- **BITADDR5: corrupted Bit Address in the page between the 1280th and the 1535th bytes**

During a page read, this value contains the corrupted bit offset where an error occurred, if a single error was detected. If multiple errors were detected, this value is meaningless.

- **WORDADDR5: corrupted Word Address in the page between the 1280th and the 1535th bytes**

During a page read, this value contains the word address (8-bit word) where an error occurred, if a single error was detected. If multiple errors were detected, this value is meaningless.

- **NPARITY5:**

Parity N

23.7.7 ECC Parity Register 6

Register Name: ECC_PR6

Access Type: Read-only

31	30	29	28	27	26	25	24
–	–	–	–	–	–	–	–
23	22	21	20	19	18	17	16
0	NPARITY6						
15	14	13	12	11	10	9	8
NPARITY6				0	WORDADDR6		
7	6	5	4	3	2	1	0
WORDADDR6					BITADDR6		

Once the entire main area of a page is written with data, the register content must be stored at any free location of the spare area.

- **BITADDR6: corrupted bit address in the page between the 1536th and the1791st bytes**

During a page read, this value contains the corrupted bit offset where an error occurred, if a single error was detected. If multiple errors were detected, this value is meaningless.

- **WORDADDR6: corrupted word address in the page between the 1536th and the1791st bytes**

During a page read, this value contains the word address (8-bit word) where an error occurred, if a single error was detected. If multiple errors were detected, this value is meaningless.

- **NPARITY6:**

Parity N

23.7.8 ECC Parity Register 7

Register Name: ECC_PR7

Access Type: Read-only

31	30	29	28	27	26	25	24
–	–	–	–	–	–	–	–
23	22	21	20	19	18	17	16
0	NPARITY7						
15	14	13	12	11	10	9	8
NPARITY7				0	WORDADDR7		
7	6	5	4	3	2	1	0
WORDADDR7					BITADDR7		

Once the entire main area of a page is written with data, the register content must be stored at any free location of the spare area.

- **BITADDR7: corrupted Bit Address in the page between the 1792nd and the 2047th bytes**

During a page read, this value contains the corrupted bit offset where an error occurred, if a single error was detected. If multiple errors were detected, this value is meaningless.

- **WORDADDR7: corrupted Word Address in the page between the 1792nd and the 2047th bytes**

During a page read, this value contains the word address (8-bit word) where an error occurred, if a single error was detected. If multiple errors were detected, this value is meaningless.

- **NPARITY7:**

Parity N

23.7.9 ECC Parity Register 8

Register Name: ECC_PR8

Access Type: Read-only

31	30	29	28	27	26	25	24
–	–	–	–	–	–	–	–
23	22	21	20	19	18	17	16
0	NPARITY8						
15	14	13	12	11	10	9	8
NPARITY8				0	WORDADDR8		
7	6	5	4	3	2	1	0
WORDADDR8					BITADDR8		

Once the entire main area of a page is written with data, the register content must be stored at any free location of the spare area.

- **BITADDR8: corrupted Bit Address in the page between the 2048th and the2303rd bytes**

During a page read, this value contains the corrupted bit offset where an error occurred, if a single error was detected. If multiple errors were detected, this value is meaningless.

- **WORDADDR8: corrupted Word Address in the page between the 2048th and the 2303rd bytes**

During a page read, this value contains the word address (8-bit word) where an error occurred, if a single error was detected. If multiple errors were detected, this value is meaningless.

- **NPARITY8:**

Parity N.

23.7.10 ECC Parity Register 9

Register Name: ECC_PR9

Access Type: Read-only

31	30	29	28	27	26	25	24
–	–	–	–	–	–	–	–
23	22	21	20	19	18	17	16
0	NPARITY9						
15	14	13	12	11	10	9	8
NPARITY9				0	WORDADDR9		
7	6	5	4	3	2	1	0
WORDADDR9					BITADDR9		

Once the entire main area of a page is written with data, the register content must be stored at any free location of the spare area

- **BITADDR9: corrupted bit address in the page between the 2304th and the 2559th bytes**

During a page read, this value contains the corrupted bit offset where an error occurred, if a single error was detected. If multiple errors were detected, this value is meaningless.

- **WORDADDR9: corrupted word address in the page between the 2304th and the 2559th bytes**

During a page read, this value contains the word address (8-bit word) where an error occurred, if a single error was detected. If multiple errors were detected, this value is meaningless

- **NPARITY9**

Parity N

23.7.11 ECC Parity Register 10

Register Name: ECC_PR10

Access Type: Read-only

31	30	29	28	27	26	25	24
–	–	–	–	–	–	–	–
23	22	21	20	19	18	17	16
0	NPARITY10						
15	14	13	12	11	10	9	8
NPARITY10				0	WORDADDR10		
7	6	5	4	3	2	1	0
WORDADDR10					BITADDR10		

Once the entire main area of a page is written with data, the register content must be stored at any free location of the spare area.

- **BITADDR10: corrupted Bit Address in the page between the 2560th and the2815th bytes**

During a page read, this value contains the corrupted bit offset where an error occurred, if a single error was detected. If multiple errors were detected, this value is meaningless.

- **WORDADDR10: corrupted Word Address in the page between the 2560th and the 2815th bytes**

During a page read, this value contains the word address (8-bit word) where an error occurred, if a single error was detected. If multiple errors were detected, this value is meaningless.

- **NPARITY10:**

Parity N

23.7.12 ECC Parity Register 11

Register Name: ECC_PR11

Access Type: Read-only

31	30	29	28	27	26	25	24
–	–	–	–	–	–	–	–
23	22	21	20	19	18	17	16
0	NPARITY11						
15	14	13	12	11	10	9	8
NPARITY11				0	WORDADDR11		
7	6	5	4	3	2	1	0
WORDADDR11					BITADDR11		

Once the entire main area of a page is written with data, the register content must be stored at any free location of the spare area.

- **BITADDR11: corrupted Bit Address in the page between the 2816th and the 3071st bytes**

During a page read, this value contains the corrupted bit offset where an error occurred, if a single error was detected. If multiple errors were detected, this value is meaningless.

- **WORDADDR11: corrupted Word Address in the page between the 2816th and the 3071st bytes**

During a page read, this value contains the word address (8-bit word) where an error occurred, if a single error was detected. If multiple errors were detected, this value is meaningless.

- **NPARITY11:**

Parity N

23.7.13 ECC Parity Register 12

Register Name: ECC_PR12

Access Type: Read-only

31	30	29	28	27	26	25	24
–	–	–	–	–	–	–	–
23	22	21	20	19	18	17	16
0	NPARITY12						
15	14	13	12	11	10	9	8
NPARITY12				0	WORDADDR12		
7	6	5	4	3	2	1	0
WORDADDR12					BITADDR12		

Once the entire main area of a page is written with data, the register content must be stored at any free location of the spare area.

- **BITADDR12; corrupted Bit Address in the page between the 3072nd and the 3327th bytes**

During a page read, this value contains the corrupted bit offset where an error occurred, if a single error was detected. If multiple errors were detected, this value is meaningless.

- **WORDADDR12: corrupted Word Address in the page between the 3072nd and the 3327th bytes**

During a page read, this value contains the word address (8-bit word) where an error occurred, if a single error was detected. If multiple errors were detected, this value is meaningless.

- **NPARITY12:**

Parity N

23.7.14 ECC Parity Register 13

Register Name: ECC_PR13

Access Type: Read-only

31	30	29	28	27	26	25	24
–	–	–	–	–	–	–	–
23	22	21	20	19	18	17	16
0	NPARITY13						
15	14	13	12	11	10	9	8
NPARITY13				0	WORDADDR13		
7	6	5	4	3	2	1	0
WORDADDR13					BITADDR13		

Once the entire main area of a page is written with data, the register content must be stored at any free location of the spare area.

- **BITADDR13: corrupted Bit Address in the page between the 3328th and the 3583rd bytes**

During a page read, this value contains the corrupted bit offset where an error occurred, if a single error was detected. If multiple errors were detected, this value is meaningless.

- **WORDADDR13: corrupted Word Address in the page between the 3328th and the 3583rd bytes**

During a page read, this value contains the word address (8-bit word) where an error occurred, if a single error was detected. If multiple errors were detected, this value is meaningless.

- **NPARITY13:**

Parity N

23.7.15 ECC Parity Register 14

Register Name: ECC_PR14

Access Type: Read-only

31	30	29	28	27	26	25	24
–	–	–	–	–	–	–	–
23	22	21	20	19	18	17	16
0	NPARITY14						
15	14	13	12	11	10	9	8
NPARITY14				0	WORDADDR14		
7	6	5	4	3	2	1	0
WORDADDR14					BITADDR14		

Once the entire main area of a page is written with data, the register content must be stored at any free location of the spare area.

- **BITADDR14: corrupted Bit Address in the page between the 3584th and the 3839th bytes**

During a page read, this value contains the corrupted bit offset where an error occurred, if a single error was detected. If multiple errors were detected, this value is meaningless.

- **WORDADDR14: corrupted Word Address in the page between the 3584th and the 3839th bytes**

During a page read, this value contains the word address (8-bit word) where an error occurred, if a single error was detected. If multiple errors were detected, this value is meaningless.

- **NPARITY14:**

Parity N

23.7.16 ECC Parity Register 15

Register Name: ECC_PR15

Access Type: Read-only

31	30	29	28	27	26	25	24
–	–	–	–	–	–	–	–
23	22	21	20	19	18	17	16
0	NPARITY15						
15	14	13	12	11	10	9	8
NPARITY15				0	WORDADDR15		
7	6	5	4	3	2	1	0
WORDADDR15					BITADDR15		

Once the entire main area of a page is written with data, the register content must be stored at any free location of the spare area

- **BITADDR15: corrupted Bit Address in the page between the 3840th and the 4095th bytes**

During a page read, this value contains the corrupted bit offset where an error occurred, if a single error was detected. If multiple errors were detected, this value is meaningless.

- **WORDADDR15: corrupted Word Address in the page between the 3840th and the 4095th bytes**

During a page read, this value contains the word address (8-bit word) where an error occurred, if a single error was detected. If multiple errors were detected, this value is meaningless.

- **NPARITY15**

Parity N

24. Peripheral DMA Controller (PDC)

24.1 Description

The Peripheral DMA Controller (PDC) transfers data between on-chip serial peripherals and the on- and/or off-chip memories. The link between the PDC and a serial peripheral is operated by the AHB to ABP bridge.

The user interface of each PDC channel is integrated into the user interface of the peripheral it serves. The user interface of mono directional channels (receive only or transmit only), contains two 32-bit memory pointers and two 16-bit counters, one set (pointer, counter) for current transfer and one set (pointer, counter) for next transfer. The bi-directional channel user interface contains four 32-bit memory pointers and four 16-bit counters. Each set (pointer, counter) is used by current transmit, next transmit, current receive and next receive.

Using the PDC removes processor overhead by reducing its intervention during the transfer. This significantly reduces the number of clock cycles required for a data transfer, which improves microcontroller performance.

To launch a transfer, the peripheral triggers its associated PDC channels by using transmit and receive signals. When the programmed data is transferred, an end of transfer interrupt is generated by the peripheral itself.

24.2 Embedded Characteristics

- Acting as one AHB Bus Matrix Master
- Allows data transfers from/to peripheral to/from any memory space without any intervention of the processor.
- Next Pointer support, prevents strong real-time constraints on buffer management.

The Peripheral DMA Controller handles transfer requests from the channel according to the following priorities (Low to High priorities):

Table 24-1. Peripheral DMA Controller

Instance name	Channel T/R
DBGU	Transmit
USART3	Transmit
USART2	Transmit
USART1	Transmit
USART0	Transmit
AC97C	Transmit
SPI1	Transmit
SPI0	Transmit
SSC1	Transmit
SSC0	Transmit
TSADCC	Receive
DBGU	Receive
USART3	Receive
USART2	Receive
USART1	Receive
USART0	Receive
AC97C	Receive
SPI1	Receive
SPI0	Receive
SSC1	Receive
SSC0	Receive

24.3 Block Diagram

Figure 24-1. Block Diagram

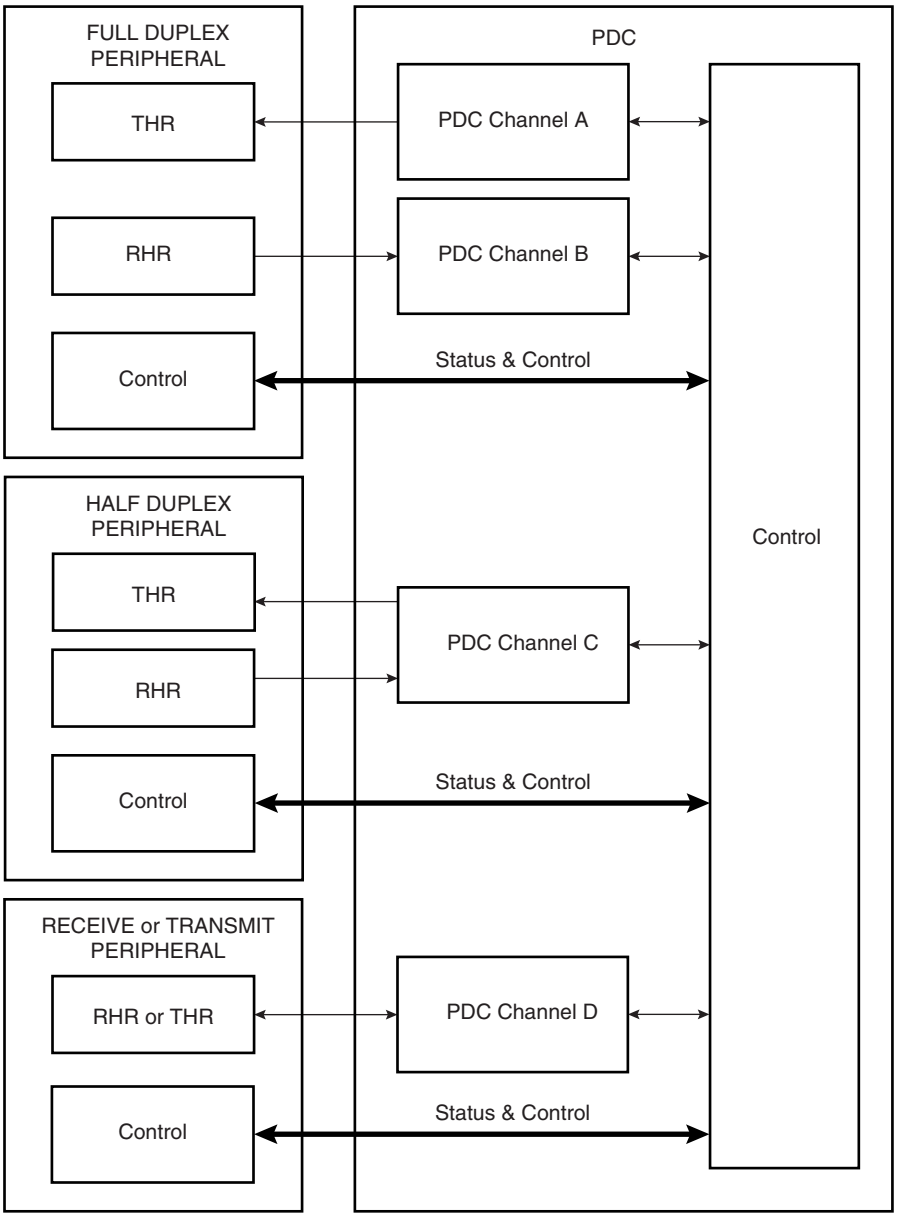

24.4 Functional Description

24.4.1 Configuration

The PDC channel user interface enables the user to configure and control data transfers for each channel. The user interface of each PDC channel is integrated into the associated peripheral user interface.

The user interface of a serial peripheral, whether it is full or half duplex, contains four 32-bit pointers (RPR, RNPR, TPR, TNPR) and four 16-bit counter registers (RCR, RNCR, TCR, TNCR). However, the transmit and receive parts of each type are programmed differently: the transmit and receive parts of a full duplex peripheral can be programmed at the same time, whereas only one part (transmit or receive) of a half duplex peripheral can be programmed at a time.

32-bit pointers define the access location in memory for current and next transfer, whether it is for read (transmit) or write (receive). 16-bit counters define the size of current and next transfers. It is possible, at any moment, to read the number of transfers left for each channel.

The PDC has dedicated status registers which indicate if the transfer is enabled or disabled for each channel. The status for each channel is located in the associated peripheral status register. Transfers can be enabled and/or disabled by setting TXTEN/TXTDIS and RXTEN/RXTDIS in the peripheral's Transfer Control Register.

At the end of a transfer, the PDC channel sends status flags to its associated peripheral. These flags are visible in the peripheral status register (ENDRX, ENDTX, RXBUFF, and TXBUFE). Refer to Section 24.4.3 and to the associated peripheral user interface.

24.4.2 Memory Pointers

Each full duplex peripheral is connected to the PDC by a receive channel and a transmit channel. Both channels have 32-bit memory pointers that point respectively to a receive area and to a transmit area in on- and/or off-chip memory.

Each half duplex peripheral is connected to the PDC by a bidirectional channel. This channel has two 32-bit memory pointers, one for current transfer and the other for next transfer. These pointers point to transmit or receive data depending on the operating mode of the peripheral.

Depending on the type of transfer (byte, half-word or word), the memory pointer is incremented respectively by 1, 2 or 4 bytes.

If a memory pointer address changes in the middle of a transfer, the PDC channel continues operating using the new address.

24.4.3 Transfer Counters

Each channel has two 16-bit counters, one for current transfer and the other one for next transfer. These counters define the size of data to be transferred by the channel. The current transfer counter is decremented first as the data addressed by current memory pointer starts to be transferred. When the current transfer counter reaches zero, the channel checks its next transfer counter. If the value of next counter is zero, the channel stops transferring data and sets the appropriate flag. But if the next counter value is greater then zero, the values of the next pointer/next counter are copied into the current pointer/current counter and the channel resumes the transfer whereas next pointer/next counter get zero/zero as values. At the end of this transfer the PDC channel sets the appropriate flags in the Peripheral Status Register.

The following list gives an overview of how status register flags behave depending on the counters' values:

- ENDRX flag is set when the PERIPH_RCR register reaches zero.
- RXBUFF flag is set when both PERIPH_RCR and PERIPH_RNCR reach zero.
- ENDTX flag is set when the PERIPH_TCR register reaches zero.
- TXBUFE flag is set when both PERIPH_TCR and PERIPH_TNCR reach zero.

These status flags are described in the Peripheral Status Register.

24.4.4 Data Transfers

The serial peripheral triggers its associated PDC channels' transfers using transmit enable (TXEN) and receive enable (RXEN) flags in the transfer control register integrated in the peripheral's user interface.

When the peripheral receives an external data, it sends a Receive Ready signal to its PDC receive channel which then requests access to the Matrix. When access is granted, the PDC receive channel starts reading the peripheral Receive Holding Register (RHR). The read data are stored in an internal buffer and then written to memory.

When the peripheral is about to send data, it sends a Transmit Ready to its PDC transmit channel which then requests access to the Matrix. When access is granted, the PDC transmit channel reads data from memory and puts them to Transmit Holding Register (THR) of its associated peripheral. The same peripheral sends data according to its mechanism.

24.4.5 PDC Flags and Peripheral Status Register

Each peripheral connected to the PDC sends out receive ready and transmit ready flags and the PDC sends back flags to the peripheral. All these flags are only visible in the Peripheral Status Register.

Depending on the type of peripheral, half or full duplex, the flags belong to either one single channel or two different channels.

24.4.5.1 Receive Transfer End

This flag is set when PERIPH_RCR register reaches zero and the last data has been transferred to memory.

It is reset by writing a non zero value in PERIPH_RCR or PERIPH_RNCR.

24.4.5.2 Transmit Transfer End

This flag is set when PERIPH_TCR register reaches zero and the last data has been written into peripheral THR.

It is reset by writing a non zero value in PERIPH_TCR or PERIPH_TNCR.

24.4.5.3 Receive Buffer Full

This flag is set when PERIPH_RCR register reaches zero with PERIPH_RNCR also set to zero and the last data has been transferred to memory.

It is reset by writing a non zero value in PERIPH_TCR or PERIPH_TNCR.

24.4.5.4 Transmit Buffer Empty

This flag is set when PERIPH_TCR register reaches zero with PERIPH_TNCR also set to zero and the last data has been written into peripheral THR.

It is reset by writing a non zero value in PERIPH_TCR or PERIPH_TNCR.

24.5 Peripheral DMA Controller (PDC) User Interface

Table 24-2. Register Mapping

Offset	Register	Name	Access	Reset
0x100	Receive Pointer Register	PERIPH[(1)]_RPR	Read-write	0
0x104	Receive Counter Register	PERIPH_RCR	Read-write	0
0x108	Transmit Pointer Register	PERIPH_TPR	Read-write	0
0x10C	Transmit Counter Register	PERIPH_TCR	Read-write	0
0x110	Receive Next Pointer Register	PERIPH_RNPR	Read-write	0
0x114	Receive Next Counter Register	PERIPH_RNCR	Read-write	0
0x118	Transmit Next Pointer Register	PERIPH_TNPR	Read-write	0
0x11C	Transmit Next Counter Register	PERIPH_TNCR	Read-write	0
0x120	Transfer Control Register	PERIPH_PTCR	Write-only	0
0x124	Transfer Status Register	PERIPH_PTSR	Read-only	0

Note: 1. PERIPH: Ten registers are mapped in the peripheral memory space at the same offset. These can be defined by the user according to the function and the desired peripheral.)

24.5.1 Receive Pointer Register

Name: PERIPH_RPR

Access: Read-write

31	30	29	28	27	26	25	24
RXPTR							
23	22	21	20	19	18	17	16
RXPTR							
15	14	13	12	11	10	9	8
RXPTR							
7	6	5	4	3	2	1	0
RXPTR							

- **RXPTR: Receive Pointer Register**

RXPTR must be set to receive buffer address.

When a half duplex peripheral is connected to the PDC, RXPTR = TXPTR.

24.5.2 Receive Counter Register

Name: PERIPH_RCR

Access: Read-write

31	30	29	28	27	26	25	24
–	–	–	–	–	–	–	–
23	22	21	20	19	18	17	16
–	–	–	–	–	–	–	–
15	14	13	12	11	10	9	8
RXCTR							
7	6	5	4	3	2	1	0
RXCTR							

- **RXCTR: Receive Counter Register**

RXCTR must be set to receive buffer size.

When a half duplex peripheral is connected to the PDC, RXCTR = TXCTR.

0 = Stops peripheral data transfer to the receiver

1 - 65535 = Starts peripheral data transfer if corresponding channel is active

24.5.3 Transmit Pointer Register

Name: PERIPH_TPR

Access: Read-write

31	30	29	28	27	26	25	24
TXPTR							
23	22	21	20	19	18	17	16
TXPTR							
15	14	13	12	11	10	9	8
TXPTR							
7	6	5	4	3	2	1	0
TXPTR							

- **TXPTR: Transmit Counter Register**

TXPTR must be set to transmit buffer address.

When a half duplex peripheral is connected to the PDC, RXPTR = TXPTR.

24.5.4 Transmit Counter Register

Name: PERIPH_TCR

Access: Read-write

31	30	29	28	27	26	25	24
–	–	–	–	–	–	–	–
23	22	21	20	19	18	17	16
–	–	–	–	–	–	–	–
15	14	13	12	11	10	9	8
TXCTR							
7	6	5	4	3	2	1	0
TXCTR							

- **TXCTR: Transmit Counter Register**

TXCTR must be set to transmit buffer size.

When a half duplex peripheral is connected to the PDC, RXCTR = TXCTR.

0 = Stops peripheral data transfer to the transmitter

1- 65535 = Starts peripheral data transfer if corresponding channel is active

24.5.5 Receive Next Pointer Register

Name: PERIPH_RNPR

Access: Read-write

31	30	29	28	27	26	25	24
RXNPTR							
23	22	21	20	19	18	17	16
RXNPTR							
15	14	13	12	11	10	9	8
RXNPTR							
7	6	5	4	3	2	1	0
RXNPTR							

- **RXNPTR: Receive Next Pointer**

RXNPTR contains next receive buffer address.

When a half duplex peripheral is connected to the PDC, RXNPTR = TXNPTR.

24.5.6 Receive Next Counter Register

Name: PERIPH_RNCR

Access: Read-write

31	30	29	28	27	26	25	24
–	–	–	–	–	–	–	–
23	22	21	20	19	18	17	16
–	–	–	–	–	–	–	–
15	14	13	12	11	10	9	8
RXNCTR							
7	6	5	4	3	2	1	0
RXNCTR							

- **RXNCTR: Receive Next Counter**

RXNCTR contains next receive buffer size.

When a half duplex peripheral is connected to the PDC, RXNCTR = TXNCTR.

24.5.7 Transmit Next Pointer Register

Name: PERIPH_TNPR

Access: Read-write

31	30	29	28	27	26	25	24
TXNPTR							
23	22	21	20	19	18	17	16
TXNPTR							
15	14	13	12	11	10	9	8
TXNPTR							
7	6	5	4	3	2	1	0
TXNPTR							

- **TXNPTR: Transmit Next Pointer**

TXNPTR contains next transmit buffer address.

When a half duplex peripheral is connected to the PDC, RXNPTR = TXNPTR.

24.5.8 Transmit Next Counter Register

Name: PERIPH_TNCR

Access: Read-write

31	30	29	28	27	26	25	24
–	–	–	–	–	–	–	–
23	22	21	20	19	18	17	16
–	–	–	–	–	–	–	–
15	14	13	12	11	10	9	8
TXNCTR							
7	6	5	4	3	2	1	0
TXNCTR							

- **TXNCTR: Transmit Counter Next**

TXNCTR contains next transmit buffer size.

When a half duplex peripheral is connected to the PDC, RXNCTR = TXNCTR.

24.5.9 Transfer Control Register

Name: PERIPH_PTCR

Access: Write-only

31	30	29	28	27	26	25	24
–	–	–	–	–	–	–	–
23	22	21	20	19	18	17	16
–	–	–	–	–	–	–	–
15	14	13	12	11	10	9	8
–	–	–	–	–	–	TXTDIS	TXTEN
7	6	5	4	3	2	1	0
–	–	–	–	–	–	RXTDIS	RXTEN

- **RXTEN: Receiver Transfer Enable**

0 = No effect.

1 = Enables PDC receiver channel requests if RXTDIS is not set.

When a half duplex peripheral is connected to the PDC, enabling the receiver channel requests automatically disables the transmitter channel requests. It is forbidden to set both TXTEN and RXTEN for a half duplex peripheral.

- **RXTDIS: Receiver Transfer Disable**

0 = No effect.

1 = Disables the PDC receiver channel requests.

When a half duplex peripheral is connected to the PDC, disabling the receiver channel requests also disables the transmitter channel requests.

- **TXTEN: Transmitter Transfer Enable**

0 = No effect.

1 = Enables the PDC transmitter channel requests.

When a half duplex peripheral is connected to the PDC, it enables the transmitter channel requests only if RXTEN is not set. It is forbidden to set both TXTEN and RXTEN for a half duplex peripheral.

- **TXTDIS: Transmitter Transfer Disable**

0 = No effect.

1 = Disables the PDC transmitter channel requests.

When a half duplex peripheral is connected to the PDC, disabling the transmitter channel requests disables the receiver channel requests.

24.5.10 Transfer Status Register

Name: PERIPH_PTSR

Access: Read-only

31	30	29	28	27	26	25	24
–	–	–	–	–	–	–	–
23	22	21	20	19	18	17	16
–	–	–	–	–	–	–	–
15	14	13	12	11	10	9	8
–	–	–	–	–	–	–	TXTEN
7	6	5	4	3	2	1	0
–	–	–	–	–	–	–	RXTEN

- **RXTEN: Receiver Transfer Enable**

0 = PDC Receiver channel requests are disabled.

1 = PDC Receiver channel requests are enabled.

- **TXTEN: Transmitter Transfer Enable**

0 = PDC Transmitter channel requests are disabled.

1 = PDC Transmitter channel requests are enabled.

25. Clock Generator

25.1 Description

The Clock Generator User Interface is embedded within the Power Management Controller Interface and is described in Section 26.12. However, the Clock Generator registers are named CKGR_.

25.2 Embedded Characteristics

The Clock Generator is made up of:

- One Low Power 32768 Hz Slow Clock Oscillator with bypass mode
- One Low-Power RC oscillator
- One 12 MHz Main Oscillator, which can be bypassed
- One 400 to 800 MHz programmable PLLA, capable to provide the clock MCK to the processor and to the peripherals. This PLL has an input divider to offer a wider range of output frequencies from the 12 MHz input, the only limitation being the lowest input frequency shall be higher or equal to 2 MHz.

The USB Device and Host HS Clocks are provided by a the dedicated UTMI PLL (UPLL) embedded in the UTMI macro.

Figure 25-1. Clock Generator Block Diagram

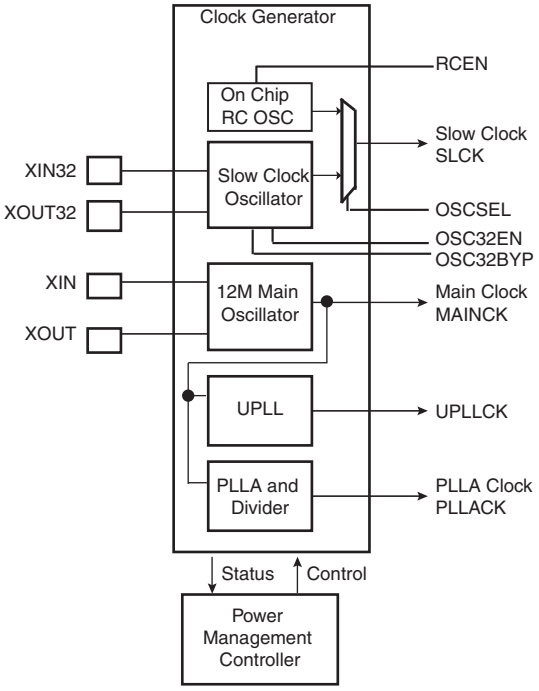

25.3 Slow Clock Crystal Oscillator

The Clock Generator integrates a 32,768 Hz low-power oscillator. The XIN32 and XOUT32 pins must be connected to a 32,768 Hz crystal. Two external capacitors must be wired as shown in Figure 25-2.

Figure 25-2. Typical Slow Clock Crystal Oscillator Connection

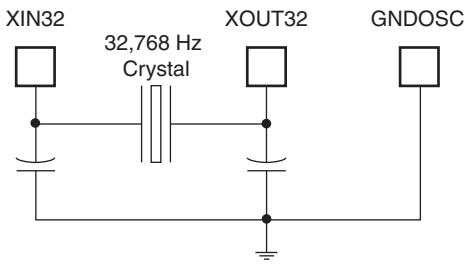

25.4 Slow Clock RC Oscillator

The user has to take into account the possible drifts of the RC Oscillator. More details are given in the section “DC Characteristics” of the product datasheet.

25.5 Slow Clock Selection

The slow clock can be generated either by an external 32,768 Hz crystal or by the on-chip RC oscillator. The 32,768 Hz crystal oscillator can be bypassed by setting the bit OSC32BYP to accept an external slow clock on XIN32.

The internal RC oscillator and the 32,768 Hz oscillator can be enabled by setting to 1, respectively, RCEN bit and OSC32EN bit in the System Controller user interface. The OSCSEL command selects the slow clock source.

Figure 25-3. Slow Clock Selection

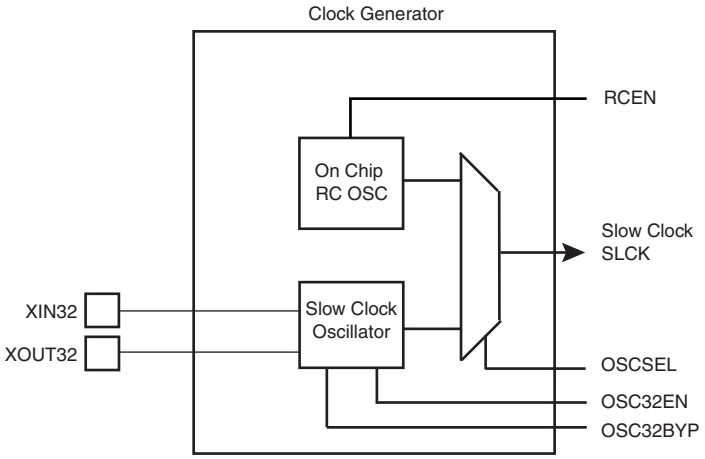

RCEN, OSC32EN,OSCSEL and OSC32BYP bits are located in the Slow Clock Control Register (SCKCR) located at address 0xFFFFFD50 in the backed up part of the System Controller and so are preserved while VDDBU is present.

After a VDDBU power on reset, the default configuration is RCEN=1, OSC32EN=0 and OSCSEL=0, allowing the system to start on the internal RC oscillator.

The programmer controls the slow clock switching by software and so must take precautions during the switching phase.

25.5.1 Switch from Internal RC Oscillator to the 32768 Hz Crystal

To switch from internal RC oscillator to the 32768 Hz crystal, the programmer must execute the following sequence:

- Switch the master clock to a source different from slow clock (PLLA or PLLB or Main Oscillator) through the Power management Controller.
- Enable the 32768 Hz oscillator by setting the bit OSCEN to 1.
- Wait 32768 Hz Startup Time for clock stabilization (software loop)
- Switch from internal RC to 32768Hz by setting the bit OSCSEL to 1.
- Wait 5 slow clock cycles for internal resynchronization
- Disable the RC oscillator by setting the bit RCEN to 0.

25.5.2 Bypass the 32768 Hz Oscillator

The following step must be added to bypass the 32768Hz Oscillator.

- An external clock must be connected on XIN32.
- Enable the bypass path OSC32BYP bit set to 1.
- Disable the 32768 Hz oscillator by setting the bit OSC32EN to 0.

25.5.3 Switch from 32768 Hz Crystal to the Internal RC oscillator

The same procedure must be followed to switch from 32768Hz crystal to the internal RC oscillator.

- Switch the master clock to a source different from slow clock (PLLA or PLLB or Main Oscillator)
- Enable the internal RC oscillator by setting the bit RCEN to 1.
- Wait internal RC Startup Time for clock stabilization (software loop)
- Switch from 32768Hz oscillator to internal RC by setting the bit OSCSEL to 0
- Wait 5 slow clock cycles for internal resynchronization
- Disable the 32768Hz oscillator by setting the bit OSC32EN to 0

25.5.4 Slow Clock Configuration Register

Register Name: SCKCR

Address: 0xFFFFFD50

Access Type: Read/Write

31	30	29	28	27	26	25	24
–	–	–	–	–	–	–	–

23	22	21	20	19	18	17	16
–	–	–	–	–	–	–	–

15	14	13	12	11	10	9	8
–	–	–	–	–	–	–	–

7	6	5	4	3	2	1	0
–	–	–	–	OSCSEL	OSC32BYP	OSC32EN	RCEN

- **RCEN: Internal RC**

0: RC is disabled

1: RC is enabled

- **OSC32EN: 32768 Hz oscillator**

0: 32768Hz oscillator is disabled

1: 32768Hz oscillator is enabled

- **OSC32BYP: 32768Hz oscillator bypass**

0: 32768Hz oscillator is not bypassed

1: 32768Hz oscillator is bypassed, accept an external slow clock on XIN32

- **OSCSEL: Slow clock selector**

0: Slow clock is internal RC

1: Slow clock is 32768 Hz oscillator

25.6 Main Oscillator

The Main Oscillator is designed for a 12 MHz fundamental crystal. The 12 MHz is an input of the PLLA and the UPLL used to generate the 480 MHz USB High Speed Clock (UPLLCK).

Figure 25-4 shows the Main Oscillator block diagram.

Figure 25-4. Main Oscillator Block Diagram

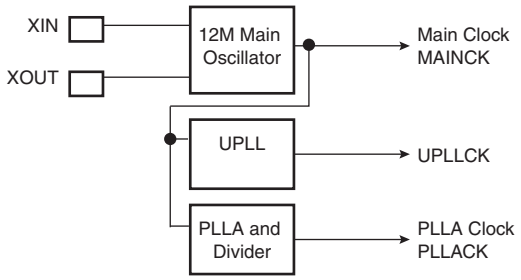

25.6.1 Main Oscillator Connections

The typical crystal connection is illustrated in Figure 25-5. For further details on the electrical characteristics of the Main Oscillator, see the section “DC Characteristics” of the product datasheet.

Figure 25-5. Typical Crystal Connection

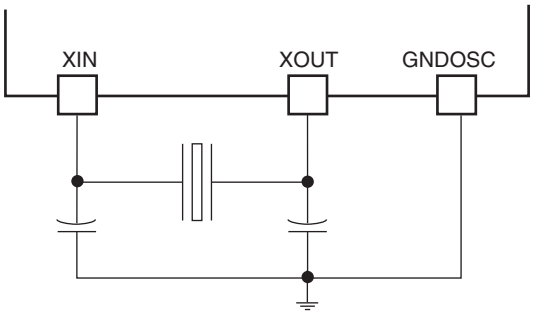

25.6.2 Main Oscillator Startup Time

The startup time of the 12 MHz Main Oscillator is given in the section “DC Characteristics” of the product datasheet.

25.6.3 Main Oscillator Control

To minimize the power required to start up the system, the main oscillator is disabled after reset and slow clock is selected.

The software enables or disables the main oscillator so as to reduce power consumption by clearing the MOSCEN bit in the Main Oscillator Register (CKGR_MOR).

When disabling the main oscillator by clearing the MOSCEN bit in CKGR_MOR, the MOSCS bit in PMC_SR is automatically cleared, indicating the main clock is off.

When enabling the main oscillator, the user must initiate the main oscillator counter with a value corresponding to the startup time of the oscillator. This startup time depends on the crystal frequency connected to the main oscillator.

When the MOSCEN bit and the OSCOUNT are written in CKGR_MOR to enable the main oscillator, the MOSCS bit in PMC_SR (Status Register) is cleared and the counter starts counting down on the slow clock divided by 8

from the OSCOUNT value. Since the OSCOUNT value is coded with 8 bits, the maximum startup time is about 62 ms.

When the counter reaches 0, the MOSCS bit is set, indicating that the main clock is valid. Setting the MOSCS bit in PMC_IMR can trigger an interrupt to the processor.

25.6.4 Main Oscillator Bypass

The user can input a clock on the device instead of connecting a crystal. In this case, the user has to provide the external clock signal on the XIN pin. The input characteristics of the XIN pin under these conditions are given in the product electrical characteristics section. The programmer has to be sure to set the OSCBYPASS bit to 1 and the MOSCEN bit to 0 in the Main OSC register (CKGR_MOR) for the external clock to operate properly.

25.7 Divider and PLLA Block

The PLLA embeds an input divider to increase the accuracy of the resulting clock signals. However, the user must respect the PLLA minimum input frequency when programming the divider.

The PLLA embeds also an output divisor by 2.

Figure 25-6 shows the block diagram of the divider and PLLA block.

Figure 25-6. Divider and PLLA Block Diagram

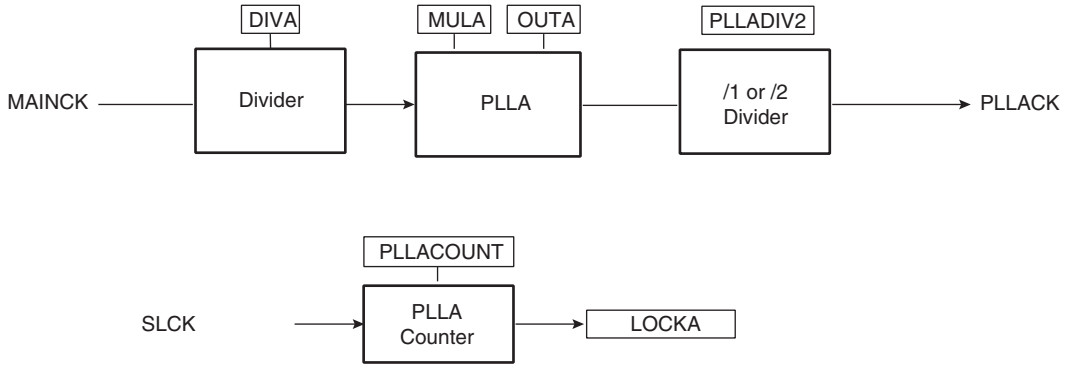

25.7.1 Divider and Phase Lock Loop Programming

The divider can be set between 1 and 255 in steps of 1. When a divider field (DIV) is set to 0, the output of the corresponding divider and the PLL output is a continuous signal at level 0. On reset, each DIV field is set to 0, thus the corresponding PLL input clock is set to 0.

The PLLA allows multiplication of the divider's outputs. The PLLA clock signal has a frequency that depends on the respective source signal frequency and on the parameters DIVA and MULA. The factor applied to the source signal frequency is (MULA + 1)/DIVA. When MULA is written to 0, the PLLA is disabled and its power consumption is saved. Re-enabling the PLLA can be performed by writing a value higher than 0 in the MUL field.

Whenever the PLLA is re-enabled or one of its parameters is changed, the LOCKA bit in PMC_SR is automatically cleared. The values written in the PLLACOUNT field in CKGR_PLLAR are loaded in the PLLA counter. The PLLA counter then decrements at the speed of the Slow Clock until it reaches 0. At this time, the LOCK bit is set in PMC_SR and can trigger an interrupt to the processor. The user has to load the number of Slow Clock cycles required to cover the PLLA transient time into the PLLACOUNT field.

The PLLA clock can be divided by 2 by writing the PLLADIV2 bit in PMC_MCKR register.

25.8 UTMI Bias and Phase Lock Loop Programming

The multiplier is built-in to 40 to obtain the USB High Speed 480 MHz.

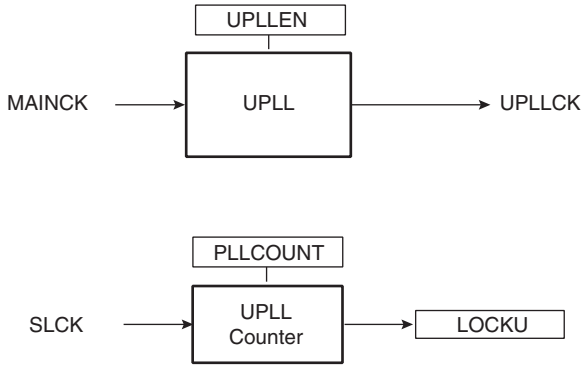

Whenever the UPLL is enabled by writing UPLLEN in CKGR_UCKR, the LOCKU bit in PMC_SR is automatically cleared. The values written in the PLLCOUNT field in CKGR_UCKR are loaded in the UPLL counter. The UPLL counter then decrements at the speed of the Slow Clock divided by 8 until it reaches 0. At this time, the LOCKU bit is set in PMC_SR and can trigger an interrupt to the processor. The user has to load the number of Slow Clock cycles required to cover the UPLL transient time into the PLLCOUNT field. The BIAS, needed for High Speed operations, is enabled by writing BIASEN in CKGR_UCKR once the PLL locked.

26. Power Management Controller (PMC)

26.1 Description

The Power Management Controller (PMC) optimizes power consumption by controlling all system and user peripheral clocks. The PMC enables/disables the clock inputs to many of the peripherals and the ARM Processor.

26.2 Embedded Characteristics

The Power Management Controller provides all the clock signals to the system.

PMC input clocks:

- UPLLCK: From UTMI PLL
- PLLACK From PLLA
- SLCK: slow clock from OSC32K or internal RC OSC
- MAINCK: from 12 MHz external oscillator

PMC output clocks

- Processor Clock PCK
- Master Clock MCK, in particular to the Matrix and the memory interfaces. The divider can be 1,2,3 or 4
- DDR system clock equal to 2xMCK

Note: DDR system clock is not available when Master Clock (MCK) equals Processor Clock (PCK).

- USB Host EHCI High speed clock (UPLLCK)
- USB OHCI clocks (UHP48M and UHP12M)
- Independent peripheral clocks, typically at the frequency of MCK
- Two programmable clock outputs: PCK0 and PCK1

This allows the software control of five flexible operating modes:

- Normal Mode, processor and peripherals running at a programmable frequency
- Idle Mode, processor stopped waiting for an interrupt
- Slow Clock Mode, processor and peripherals running at low frequency
- Standby Mode, mix of Idle and Backup Mode, peripheral running at low frequency, processor stopped waiting for an interrupt
- Backup Mode, Main Power Supplies off, VDDBU powered by a battery

26.3 Block Diagram

Figure 26-1. Power Management Controller Block Diagram

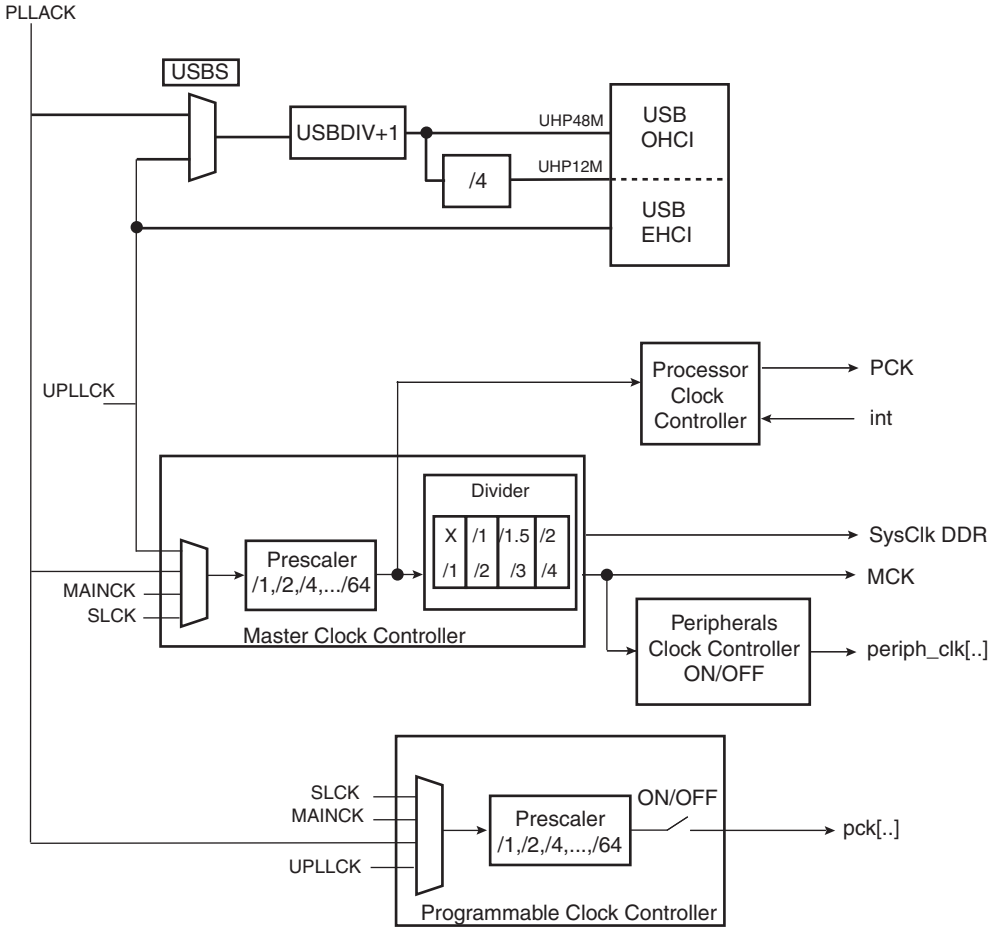

26.3.1 Main Application Modes

The Power Management Controller provides 3 main application modes.

26.3.1.1 Normal Mode

- PLLA and UPLL are running respectively at 400 MHz and 480 MHz
- USB Device High Speed and Host EHCI High Speed operations are allowed
- Full Speed OHCI input clock is UPLLCK, USBDIV is 9 (division by 10)
- System Input clock is PLLACK, PCK is 400 MHz
- MDIV is ‘11’, MCK is 133 MHz
- DDR2 can be used at up to 133 MHz

26.3.1.2 USB HS and LP-DDR Mode

- Only UPLL is running at 480 MHz, PLLA power consumption is saved
- USB Device High Speed and Host EHCI High Speed operations are allowed
- Full Speed OHCI input clock is UPLLCK, USBDIV is 9 (division by 10)

- System Input clock is UPLLCK, Prescaler is 2, PCK is 240 MHz
- MDIV is ‘01’, MCK is 120 MHz
- Only LP-DDR can be used at up to 120 MHz

26.3.1.3 *No UDP HS, UHP FS and DDR2 Mode*

- Only PLLA is running at 384 MHz, UPLL power consumption is saved
- USB Device High Speed and Host EHCI High Speed operations are NOT allowed
- Full Speed OHCI input clock is PLLACK, USBDIV is 7 (division by 8)
- System Input clock is PLLACK, PCK is 384 MHz
- MDIV is ‘11’, MCK is 128 MHz
- DDR2 can be used at up to 128 MHz

26.4 Master Clock Controller

The Master Clock Controller provides selection and division of the Master Clock (MCK). MCK is the clock provided to all the peripherals and the memory controller.

The Master Clock is selected from one of the clocks provided by the Clock Generator. Selecting the Slow Clock provides a Slow Clock signal to the whole device. Selecting the Main Clock saves power consumption of the PLLA.

The Master Clock Controller is made up of a clock selector and a prescaler. It also contains a Master Clock divider which allows the processor clock to be faster than the Master Clock.

The Master Clock selection is made by writing the CSS field (Clock Source Selection) in PMC_MCKR (Master Clock Register). The prescaler supports the division by a power of 2 of the selected clock between 1 and 64. The PRES field in PMC_MCKR programs the prescaler. The Master Clock divider can be programmed through the MDIV field in PMC_MCKR.

Note: It is forbidden to modify MDIV and CSS at the same access. Each field must be modified separately with a wait for MCKRDY flag between the first field modification and the second field modification.

Each time PMC_MCKR is written to define a new Master Clock, the MCKRDY bit is cleared in PMC_SR. It reads 0 until the Master Clock is established. Then, the MCKRDY bit is set and can trigger an interrupt to the processor. This feature is useful when switching from a high-speed clock to a lower one to inform the software when the change is actually done.

Figure 26-2. Master Clock Controller

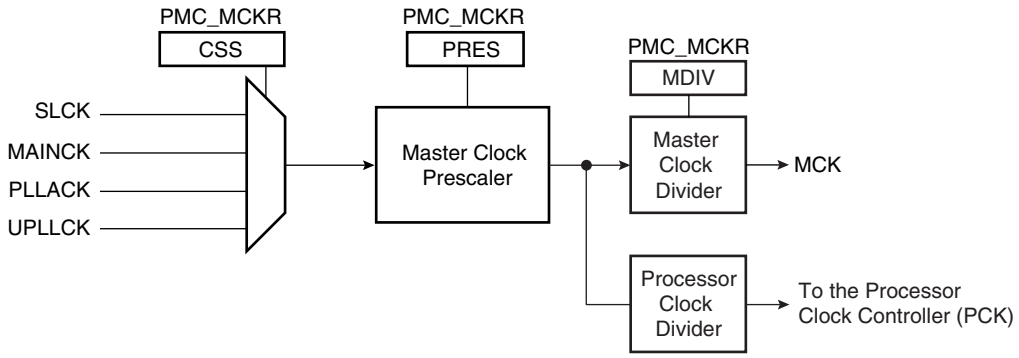

26.5 Processor Clock Controller

The PMC features a Processor Clock Controller (PCK) that implements the Processor Idle Mode. The Processor Clock can be disabled by writing the System Clock Disable Register (PMC_SCDR). The status of this clock (at least for debug purpose) can be read in the System Clock Status Register (PMC_SCSR).

The Processor Clock PCK is enabled after a reset and is automatically re-enabled by any enabled interrupt. The Processor Idle Mode is achieved by disabling the Processor Clock and entering Wait for Interrupt Mode. The Processor Clock is automatically re-enabled by any enabled fast or normal interrupt, or by reset of the product.

Note: The ARM Wait for Interrupt mode is entered by means of CP15 coprocessor operation. Refer to the Atmel application note, Optimizing Power Consumption for AT91SAM9261-based Systems, lit. number 6217.

When the Processor Clock is disabled, the current instruction is finished before the clock is stopped, but this does not prevent data transfers from other masters of the system bus.

26.6 USB Device and Host clocks

The USB Device and Host High Speed ports clocks are controlled by the UDPHS and UHPHS bits in PMC_PCER. To save power on this peripheral when they are is not used, the user can set these bits in PMC_PCDR. The UDPHS and UHPHS bits PMC_PCSR gives the activity of these clocks.

The PMC also provides the clocks UHP48M and UHP12M to the USB Host OHCI. The USB Host OHCI clocks are controlled by the UHP bit in PMC_SCER. To save power on this peripheral when it is not used, the user can set the UHP bit in PMC_SCDR. The UHP bit in PMC_SCSR gives the activity of this clock. The USB host OHCI requires both the 12/48 MHz signal and the Master Clock. USBDIV field in PMC_USB register is to be programmed to 9 (division by 10) for normal operations.

To save more power consumption user can stop UTMI PLL, in this case USB high-speed operations are not possible. Nevertheless, as the USB OHCI Input clock can be selected with USBS bit (PLLA or UTMI PLL) in PMC_USB register, OHCI full-speed operation remain possible.

The user must program the USB OHCI Input Clock and the USBDIV divider in PMC_USB register to generate a 48 MHz and a 12 MHz signal with an accuracy of ± 0.25%.

26.7 LP-DDR/DDR2 Clock

The Power Management Controller controls the clocks of the DDR memory. It provides SysClk DDR internal clock. That clock is used by the DDR Controller to provide DDR control, data and DDR clock signals.

The DDR clock can be enabled and disabled with DDRCK bit respectively in PMC_SCER and PMC_SDER registers. At reset DDR clock is disabled to save power consumption.

The Input clock is the same as Master Clock. The Output SysClk DDR Clock is 2xMCK.

In the case MDIV = ‘00’, PCK = MCK and SysClk DDR and DDRCK clocks are not available.

If Input clock is PLLACK/PLLADIV2 the DDR Controller can drive DDR2 and LP-DDR at up to 133 MHz with MDIV = ‘11’.

To save PLLA power consumption, the user can choose UPLLCK an Input clock for the system. In this case the DDR Controller can drive LD-DDR at up to 120 MHz.

26.8 Peripheral Clock Controller

The Power Management Controller controls the clocks of each embedded peripheral by the way of the Peripheral Clock Controller. The user can individually enable and disable the Master Clock on the peripherals by writing into the Peripheral Clock Enable (PMC_PCER) and Peripheral Clock Disable (PMC_PCDR) registers. The status of the peripheral clock activity can be read in the Peripheral Clock Status Register (PMC_PCSR).

When a peripheral clock is disabled, the clock is immediately stopped. The peripheral clocks are automatically disabled after a reset.

In order to stop a peripheral, it is recommended that the system software wait until the peripheral has executed its last programmed operation before disabling the clock. This is to avoid data corruption or erroneous behavior of the system.

The bit number within the Peripheral Clock Control registers (PMC_PCER, PMC_PCDR, and PMC_PCSR) is the Peripheral Identifier defined at the product level. Generally, the bit number corresponds to the interrupt source number assigned to the peripheral.

26.9 Programmable Clock Output Controller

The PMC controls PMC_PROG_CLK_NB signals to be output on external pins PCKx. Each signal can be independently programmed via the PMC_PCKx registers.

PCKx can be independently selected between the Slow clock, the Master Clock, the PLLACK/PLLADIV2, the UTMI PLL output and the main clock by writing the CSS and CSSMCK fields in PMC_PCKx. Each output signal can also be divided by a power of 2 between 1 and 64 by writing the PRES (Prescaler) field in PMC_PCKx.

Each output signal can be enabled and disabled by writing 1 in the corresponding bit, PCKx of PMC_SCER and PMC_SCDR, respectively. Status of the active programmable output clocks are given in the PCKx bits of PMC_SCSR (System Clock Status Register).

Moreover, like the PCK, a status bit in PMC_SR indicates that the Programmable Clock is actually what has been programmed in the Programmable Clock registers.

As the Programmable Clock Controller does not manage with glitch prevention when switching clocks, it is strongly recommended to disable the Programmable Clock before any configuration change and to re-enable it after the change is actually performed.

26.10 Programming Sequence

1. Enabling the 12 MHz Main Oscillator:

   The main oscillator is enabled by setting the MOSCEN field in the CKGR_MOR register. In some cases it may be advantageous to define a start-up time. This can be achieved by writing a value in the OSCOUNT field in the CKGR_MOR register.

   Once this register has been correctly configured, the user must wait for MOSCS field in the PMC_SR register to be set. This can be done either by polling the status register or by waiting the interrupt line to be raised if the associated interrupt to MOSCS has been enabled in the PMC_IER register.

2. Setting PLLA and divider:

   All parameters needed to configure PLLA and the divider are located in the CKGR_PLLAR register.

   The DIVA field is used to control divider itself. A value between 0 and 255 can be programmed. Divider output is divider input divided by DIVA parameter. By default DIVA parameter is set to 0 which means that divider is turned off.

   The OUTA field is used to select the PLLA output frequency range.

   The MULA field is the PLLA multiplier factor. This parameter can be programmed between 0 and 254. If MULA is set to 0, PLLA will be turned off, otherwise the PLLA output frequency is PLLA input frequency multiplied by (MULA + 1).

   The PLLACOUNT field specifies the number of slow clock cycles before LOCKA bit is set in the PMC_SR register after CKGR_PLLAR register has been written.

   Once the PMC_PLLAR register has been written, the user must wait for the LOCKA bit to be set in the PMC_SR register. This can be done either by polling the status register or by waiting the interrupt line to be raised if the associated interrupt to LOCKA has been enabled in the PMC_IER register. All parameters in

CKGR_PLLAR can be programmed in a single write operation. If at some stage one of the following parameters, MULA, DIVA is modified, LOCKA bit will go low to indicate that PLLA is not ready yet. When PLLA is locked, LOCKA will be set again. The user is constrained to wait for LOCKA bit to be set before using the PLLA output clock.

Code Example:

```
write_register(CKGR_PLLAR,0x00040805)
```

If PLLA and divider are enabled, the PLLA input clock is the main clock. PLLA output clock is PLLA input clock multiplied by 5. Once CKGR_PLLAR has been written, LOCKA bit will be set after eight slow clock cycles.

3. Setting Bias and High Speed PLL (UPLL) for UTMI

The UTMI PLL is enabled by setting the UPLLEN field in the CKGR_UCKR register. The UTMI Bias must is enabled by setting the BIASEN field in the CKGR_UCKR register in the same time. In some cases it may be advantageous to define a start-up time. This can be achieved by writing a value in the PLLCOUNT field in the CKGR_UCKR register.

Once this register has been correctly configured, the user must wait for LOCKU field in the PMC_SR register to be set. This can be done either by polling the status register or by waiting the interrupt line to be raised if the associated interrupt to LOCKU has been enabled in the PMC_IER register.

4. Selection of Master Clock and Processor Clock

The Master Clock and the Processor Clock are configurable via the PMC_MCKR register.

The CSS field is used to select the clock source of the Master Clock and Processor Clock dividers. By default, the selected clock source is slow clock.

The PRES field is used to control the Master/Processor Clock prescaler. The user can choose between different values (1, 2, 4, 8, 16, 32, 64). Prescaler output is the selected clock source divided by PRES parameter. By default, PRES parameter is set to 1 which means that the input clock of the Master Clock and Processor Clock dividers is equal to slow clock.

The MDIV field is used to control the Master Clock divider. It is possible to choose between different values (0, 1, 2, 3). The Master Clock output is Master/Processor Clock Prescaler output divided by 1, 2, 4 or 3, depending on the value programmed in MDIV.

The PLLADIV2 field is used to control the PLLA Clock divider. It is possible to choose between different values (0, 1). The PMC PLLA Clock input is divided by 1 or 2, depending on the value programmed in PLLADIV2.

By default, MDIV and PLLLADIV2 are set to 0, which indicates that Processor Clock is equal to the Master Clock.

Once the PMC_MCKR register has been written, the user must wait for the MCKRDY bit to be set in the PMC_SR register. This can be done either by polling the status register or by waiting for the interrupt line to be raised if the associated interrupt to MCKRDY has been enabled in the PMC_IER register.

The PMC_MCKR register must not be programmed in a single write operation. The preferred programming sequence for the PMC_MCKR register is as follows:

- If a new value for CSS field corresponds to PLLA Clock,
  - Program the PRES field in the PMC_MCKR register.
  - Wait for the MCKRDY bit to be set in the PMC_SR register.

– Program the CSS field in the PMC_MCKR register.
– Wait for the MCKRDY bit to be set in the PMC_SR register.

- If a new value for CSS field corresponds to Main Clock or Slow Clock,
  – Program the CSS field in the PMC_MCKR register.
  – Wait for the MCKRDY bit to be set in the PMC_SR register.
  – Program the PRES field in the PMC_MCKR register.
  – Wait for the MCKRDY bit to be set in the PMC_SR register.

If at some stage one of the following parameters, CSS or PRES, is modified, the MCKRDY bit will go low to indicate that the Master Clock and the Processor Clock are not ready yet. The user must wait for MCKRDY bit to be set again before using the Master and Processor Clocks.

Note: IF PLLA clock was selected as the Master Clock and the user decides to modify it by writing in CKGR_PLLAR, the MCKRDY flag will go low while PLLA is unlocked. Once PLLA is locked again, LOCK goes high and MCKRDY is set. While PLLA is unlocked, the Master Clock selection is automatically changed to Main Clock. For further information, see Section 26.11.2. “Clock Switching Waveforms” on page 342.

Code Example:

```
write_register(PMC_MCKR,0x00000001)
wait (MCKRDY=1)
write_register(PMC_MCKR,0x00000011)
wait (MCKRDY=1)
```

The Master Clock is main clock divided by 16.

The Processor Clock is the Master Clock.

5. Selection of Programmable clocks

Programmable clocks are controlled via registers; PMC_SCER, PMC_SCDR and PMC_SCSR.

Programmable clocks can be enabled and/or disabled via the PMC_SCER and PMC_SCDR registers. Depending on the system used, PMC_PROG_CLK_NB programmable clocks can be enabled or disabled. The PMC_SCSR provides a clear indication as to which Programmable clock is enabled. By default all Programmable clocks are disabled.

PMC_PCKx registers are used to configure programmable clocks.

The CSS and CSSMCK fields are used to select the programmable clock divider source. Five clock options are available: main clock, slow clock, master clock, PLLACK, UPLLCK. By default, the clock source selected is slow clock.

The PRES field is used to control the programmable clock prescaler. It is possible to choose between different values (1, 2, 4, 8, 16, 32, 64). Programmable clock output is prescaler input divided by PRES parameter. By default, the PRES parameter is set to 1 which means that master clock is equal to slow clock.

Once the PMC_PCKx register has been programmed, The corresponding programmable clock must be enabled and the user is constrained to wait for the PCKRDYx bit to be set in the PMC_SR register. This can be done either by polling the status register or by waiting the interrupt line to be raised if the associated interrupt to PCKRDYx has been enabled in the PMC_IER register. All parameters in PMC_PCKx can be programmed in a single write operation.

If the CSS and PRES parameters are to be modified, the corresponding programmable clock must be disabled first. The parameters can then be modified. Once this has been done, the user must re-enable the programmable clock and wait for the PCKRDYx bit to be set.

Code Example:

```
write_register(PMC_PCK0,0x00000015)
```

Programmable clock 0 is main clock divided by 32.

6. Enabling Peripheral Clocks

Once all of the previous steps have been completed, the peripheral clocks can be enabled and/or disabled via registers PMC_PCER and PMC_PCDR.

Depending on the system used, 19 peripheral clocks can be enabled or disabled. The PMC_PCSR provides a clear view as to which peripheral clock is enabled.

Note: Each enabled peripheral clock corresponds to Master Clock.

Code Examples:

```
write_register(PMC_PCER,0x00000110)
```

Peripheral clocks 4 and 8 are enabled.

```
write_register(PMC_PCDR,0x00000010)
```

Peripheral clock 4 is disabled.

26.11 Clock Switching Details

26.11.1 Master Clock Switching Timings

Table 26-1 gives the worst case timings required for the Master Clock to switch from one selected clock to another one. This is in the event that the prescaler is de-activated. When the prescaler is activated, an additional time of 64 clock cycles of the new selected clock has to be added.

Table 26-1. Clock Switching Timings (Worst Case)

From To	Main Clock	SLCK	PLLA Clock
Main Clock	–	4 x SLCK + 2.5 x Main Clock	3 x PLLA Clock + 4 x SLCK + 1 x Main Clock
SLCK	0.5 x Main Clock + 4.5 x SLCK	–	3 x PLLA Clock + 5 x SLCK
PLLA Clock	0.5 x Main Clock + 4 x SLCK + PLLACOUNT x SLCK + 2.5 x PLLAx Clock	2.5 x PLLA Clock + 5 x SLCK + PLLACOUNT x SLCK	2.5 x PLLA Clock + 4 x SLCK + PLLACOUNT x SLCK

26.11.2 Clock Switching Waveforms

Figure 26-3. Switch Master Clock from Slow Clock to PLLA Clock

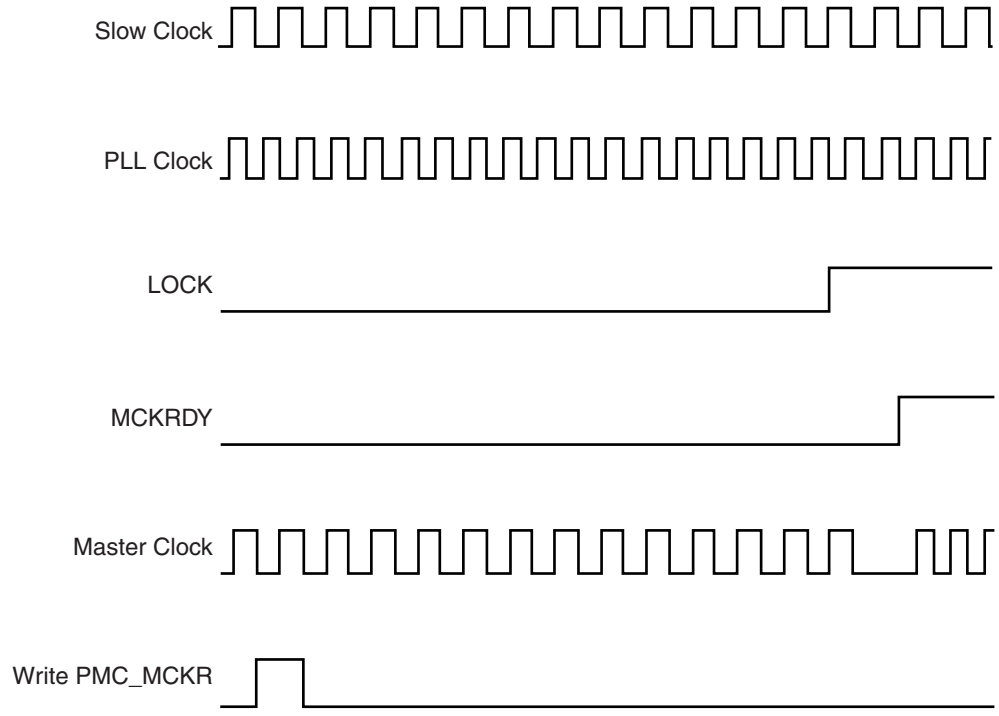

Figure 26-4. Switch Master Clock from Main Clock to Slow Clock

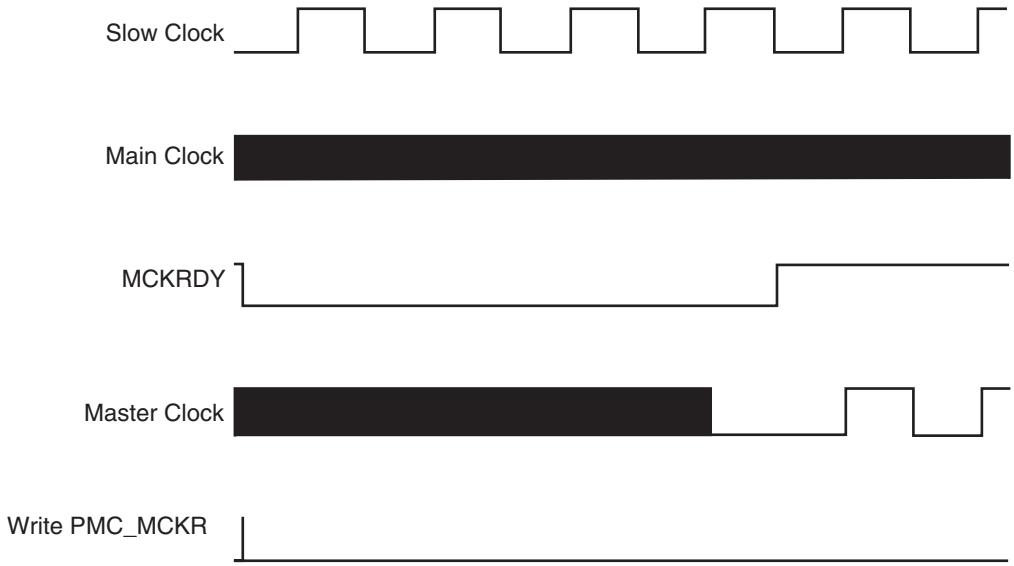

Figure 26-5. Change PLLA Programming

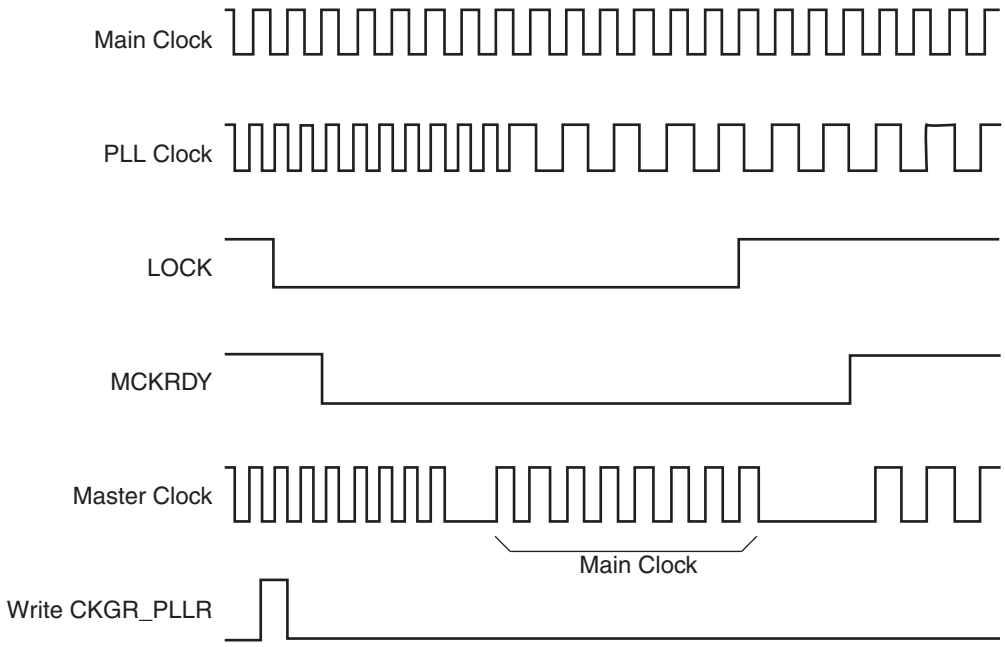

Figure 26-6. Programmable Clock Output Programming

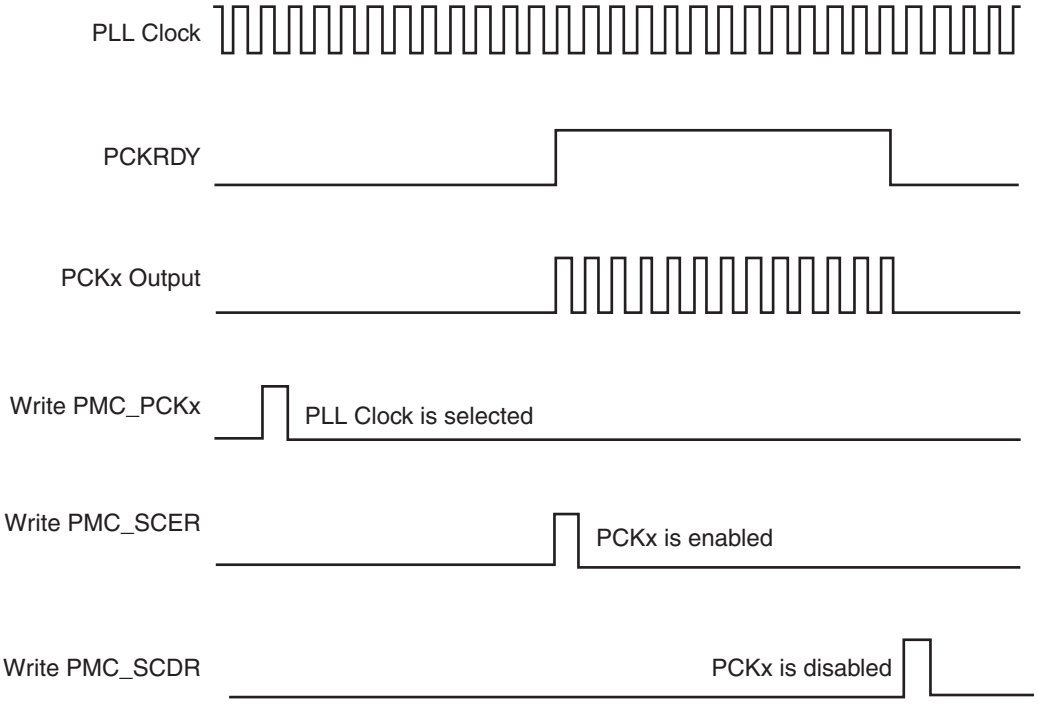

26.12 Power Management Controller (PMC) User Interface

Table 26-2. Register Mapping

Offset	Register	Name	Access	Reset Value
0x0000	System Clock Enable Register	PMC_SCER	Write-only	–
0x0004	System Clock Disable Register	PMC_SCDR	Write-only	–
0x0008	System Clock Status Register	PMC _SCSR	Read-only	0x01
0x000C	Reserved	–	–	–
0x0010	Peripheral Clock Enable Register	PMC _PCER	Write-only	–
0x0014	Peripheral Clock Disable Register	PMC_PCDR	Write-only	–
0x0018	Peripheral Clock Status Register	PMC_PCSR	Read-only	0x0
0x001C	UTMI Clock Register	CKGR_UCKR	Read/Write	0x1020 0800
0x0020	Main Oscillator Register	CKGR_MOR	Read/Write	0x0
0x0024	Main Clock Frequency Register	CKGR_MCFR	Read-only	0x0
0x0028	PLLA Register	CKGR_PLLAR	Read/Write	0x3F00
0x002C	Reserved	–	–	–
0x0030	Master Clock Register	PMC_MCKR	Read/Write	0x0
0x0038	USB Clock Register	PMC_USB	Read/Write	0x0
0x003C	Reserved	–	–	–
0x0040	Programmable Clock 0 Register	PMC_PCK0	Read/Write	0x0
0x0044	Programmable Clock 1 Register	PMC_PCK1	Read/Write	0x0
0x0048-0x005C	Reserved	–	–	–
0x0060	Interrupt Enable Register	PMC_IER	Write-only	--
0x0064	Interrupt Disable Register	PMC_IDR	Write-only	--
0x0068	Status Register	PMC_SR	Read-only	0x08
0x006C	Interrupt Mask Register	PMC_IMR	Read-only	0x0
0x0070 - 0x007C	Reserved	–	–	–
0x0080	PLL Charge Pump Current Register	PMC_PLLICPR	Write-only	0x0

26.12.1 PMC System Clock Enable Register

Register Name: PMC_SCER

Address: 0xFFFFFC00

Access Type: Write-only

31	30	29	28	27	26	25	24
–	–	–	–	–	–	–	–

23	22	21	20	19	18	17	16
–	–	–	–	–	–	–	–

15	14	13	12	11	10	9	8
PCK7	PCK6	PCK5	PCK4	PCK5	PCK4	PCK1	PCK0

7	6	5	4	3	2	1	0
PCK7	UHP	–	–	–	DDRCK	–	–

- **DDRCK: DDR Clock Enable**

0 = No effect.

1 = Enables the DDR clock.

- **UHP: USB Host OHCI Clocks Enable**

0 = No effect.

1 = Enables the UHP48M and UHP12M OHCI clocks.

- **PCKx: Programmable Clock x Output Enable**

0 = No effect.

1 = Enables the corresponding Programmable Clock output.

26.12.2 PMC System Clock Disable Register

Register Name: PMC_SCDR

Address: 0xFFFFFC04

Access Type: Write-only

31	30	29	28	27	26	25	24
–	–	–	–	–	–	–	–

23	22	21	20	19	18	17	16
–	–	–	–	–	–	–	–

15	14	13	12	11	10	9	8
PCK7	PCK6	PCK5	PCK4	PCK5	PCK4	PCK1	PCK0

7	6	5	4	3	2	1	0
PCK7	UHP	–	–	–	DDRCK	–	PCK

- **PCK: Processor Clock Disable**

0 = No effect.

1 = Disables the Processor clock. This is used to enter the processor in Idle Mode.

- **DDRCK: DDR Clock Disable**

0 = No effect.

1 = Disables the DDR clock.

- **UHP: USB Host OHCI Clock Disable**

0 = No effect.

1 = Disables the UHP48M and UHP12M OHCI clocks.

- **PCKx: Programmable Clock x Output Disable**

0 = No effect.

1 = Disables the corresponding Programmable Clock output.

26.12.3 PMC System Clock Status Register

Register Name: PMC_SCSR

Address: 0xFFFFFC08

Access Type: Read-only

31	30	29	28	27	26	25	24
–	–	–	–	–	–	–	–

23	22	21	20	19	18	17	16
–	–	–	–	–	–	–	–

15	14	13	12	11	10	9	8
PCK7	PCK6	PCK5	PCK4	PCK5	PCK4	PCK1	PCK0

7	6	5	4	3	2	1	0
PCK7	UHP	–	–	–	DDRCK	–	PCK

- **PCK: Processor Clock Status**

0 = The Processor clock is disabled.

1 = The Processor clock is enabled.

- **DDRCK: DDR Clock Status**

0 = The DDR clock is disabled.

1 = The DDR clock is enabled.

- **UHP: USB Host Port Clock Status**

0 = The UHP48M and UHP12M OHCI clocks are disabled.

1 = The UHP48M and UHP12M OHCI clocks are enabled.

- **PCKx: Programmable Clock x Output Status**

0 = The corresponding Programmable Clock output is disabled.

1 = The corresponding Programmable Clock output is enabled.

26.12.4 PMC Peripheral Clock Enable Register

Register Name: PMC_PCER

Address: 0xFFFFFC10

Access Type: Write-only

31	30	29	28	27	26	25	24
PID31	PID30	PID29	PID28	PID27	PID26	PID25	PID24
23	22	21	20	19	18	17	16
PID23	PID22	PID21	PID20	PID19	PID18	PID17	PID16
15	14	13	12	11	10	9	8
PID15	PID14	PID13	PID12	PID11	PID10	PID9	PID8
7	6	5	4	3	2	1	0
PID7	PID6	PID5	PID4	PID3	PID2	-	-

- **PIDx: Peripheral Clock x Enable**

0 = No effect.

1 = Enables the corresponding peripheral clock.

Note: PID2 to PID31 refer to identifiers as defined in the section “Peripheral Identifiers” in the product datasheet.

Note: Programming the control bits of the Peripheral ID that are not implemented has no effect on the behavior of the PMC.

26.12.5 PMC Peripheral Clock Disable Register

Register Name: PMC_PCDR

Address: 0xFFFFFC14

Access Type: Write-only

31	30	29	28	27	26	25	24
PID31	PID30	PID29	PID28	PID27	PID26	PID25	PID24
23	22	21	20	19	18	17	16
PID23	PID22	PID21	PID20	PID19	PID18	PID17	PID16
15	14	13	12	11	10	9	8
PID15	PID14	PID13	PID12	PID11	PID10	PID9	PID8
7	6	5	4	3	2	1	0
PID7	PID6	PID5	PID4	PID3	PID2	-	-

- **PIDx: Peripheral Clock x Disable**

0 = No effect.

1 = Disables the corresponding peripheral clock.

Note: PID2 to PID31 refer to identifiers as defined in the section “Peripheral Identifiers” in the product datasheet.

26.12.6 PMC Peripheral Clock Status Register

Register Name: PMC_PCSR

Address: 0xFFFFFC18

Access Type: Read-only

31	30	29	28	27	26	25	24
PID31	PID30	PID29	PID28	PID27	PID26	PID25	PID24
23	22	21	20	19	18	17	16
PID23	PID22	PID21	PID20	PID19	PID18	PID17	PID16
15	14	13	12	11	10	9	8
PID15	PID14	PID13	PID12	PID11	PID10	PID9	PID8
7	6	5	4	3	2	1	0
PID7	PID6	PID5	PID4	PID3	PID2	–	–

- **PIDx: Peripheral Clock x Status**

0 = The corresponding peripheral clock is disabled.

1 = The corresponding peripheral clock is enabled.

Note: PID2 to PID31 refer to identifiers as defined in the section “Peripheral Identifiers” in the product datasheet.

26.12.7 PMC UTMI Clock Configuration Register

Register Name: CKGR_UCKR

Address: 0xFFFFFC1C

Access Type: Read/Write

31	30	29	28	27	26	25	24
BIASCOUNT				–	–	–	BIASEN

23	22	21	20	19	18	17	16
PLLCOUNT				–	–	–	UPLLEN

15	14	13	12	11	10	9	8
–	–	–	–	–	–	–	–

7	6	5	4	3	2	1	0
–	–	–	–	–	–	–	–

- **UPLLEN: UTMI PLL Enable**

0 = The UTMI PLL is disabled.

1 = The UTMI PLL is enabled.

When UPLLEN is set, the LOCKU flag is set once the UTMI PLL startup time is achieved.

- **PLLCOUNT: UTMI PLL Start-up Time**

Specifies the number of Slow Clock cycles multiplied by 8 for the UTMI PLL start-up time.

- **BIASEN: UTMI BIAS Enable**

0 = The UTMI BIAS is disabled.

1 = The UTMI BIAS is enabled.

- **BIASCOUNT: UTMI BIAS Start-up Time**

Specifies the number of Slow Clock cycles for the UTMI BIAS start-up time.

26.12.8 PMC Clock Generator Main Oscillator Register

Register Name: CKGR_MOR

Address: 0xFFFFFC20

Access Type: Read/Write

31	30	29	28	27	26	25	24
–	–	–	–	–	–	–	–

23	22	21	20	19	18	17	16
–	–	–	–	–	–	–	–

15	14	13	12	11	10	9	8
OSCOUNT							

7	6	5	4	3	2	1	0
–	–	–	–	–	–	OSCBYPASS	MOSCEN

- **MOSCEN: Main Oscillator Enable**

A crystal must be connected between XIN and XOUT.

0 = The Main Oscillator is disabled.

1 = The Main Oscillator is enabled. OSCBYPASS must be set to 0.

When MOSCEN is set, the MOSCS flag is set once the Main Oscillator startup time is achieved.

- **OSCBYPASS: Oscillator Bypass**

0 = No effect.

1 = The Main Oscillator is bypassed. MOSCEN must be set to 0. An external clock must be connected on XIN.

When OSCBYPASS is set, the MOSCS flag in PMC_SR is automatically set.

Clearing MOSCEN and OSCBYPASS bits allows resetting the MOSCS flag.

- **OSCOUNT: Main Oscillator Start-up Time**

Specifies the number of Slow Clock cycles multiplied by 8 for the Main Oscillator start-up time.

26.12.9 PMC Clock Generator Main Clock Frequency Register

Register Name: CKGR_MCFR

Address: 0xFFFFFC24

Access Type: Read-only

31	30	29	28	27	26	25	24
–	–	–	–	–	–	–	–

23	22	21	20	19	18	17	16
–	–	–	–	–	–	–	MAINRDY

15	14	13	12	11	10	9	8
MAINF							

7	6	5	4	3	2	1	0
MAINF							

- **MAINF: Main Clock Frequency**

Gives the number of Main Clock cycles within 16 Slow Clock periods.

- **MAINRDY: Main Clock Ready**

0 = MAINF value is not valid or the Main Oscillator is disabled.

1 = The Main Oscillator has been enabled previously and MAINF value is available.

26.12.10 PMC Clock Generator PLLA Register

Register Name: CKGR_PLLAR

Address: 0xFFFFFC28

Access Type: Read/Write

31	30	29	28	27	26	25	24
–	–	1	–	–	–	–	–

23	22	21	20	19	18	17	16
MULA							

15	14	13	12	11	10	9	8
OUTA		PLLACOUNT					

7	6	5	4	3	2	1	0
DIVA							

Possible limitations on PLL input frequencies and multiplier factors should be checked before using the PMC.

Warning: Bit 29 must always be set to 1 when programming the CKGR_PLLAR register.

- **DIVA: Divider A**

DIVA	Divider Selected
0	Divider output is 0
1	Divider is bypassed
2 - 255	Divider output is the selected clock divided by DIVA.

- **PLLACOUNT: PLLA Counter**

Specifies the number of slow clock cycles before the LOCKA bit is set in PMC_SR after CKGR_PLLAR is written.

- **OUTA: PLLA Clock Frequency Range**

To optimize clock performance, this field must be programmed as specified in “PLL Characteristics” in the Electrical Characteristics section of the product datasheet.

- **MULA: PLLA Multiplier**

0 = The PLLA is deactivated.

1 up to 254 = The PLLA Clock frequency is the PLLA input frequency multiplied by MULA+ 1.

26.12.11 PMC USB Clock Register

Register Name: PMC_USB

Address: 0xFFFFFC38

Access Type: Read/Write

31	30	29	28	27	26	25	24
–	–	–	–	–	–	–	–

23	22	21	20	19	18	17	16
–	–	–	–	–	–	–	–

15	14	13	12	11	10	9	8
–	–	–	–	USBDIV			

7	6	5	4	3	2	1	0
–	–	–	–	–	–	–	USBS

- **USBS: USB OHCI Input clock selection**

0 = USB Clock Input is PLLA

1 = USB Clock Input is UPLL

- **USBDIV: Divider for USB OHCI Clock.**

USB Clock is Input clock divided by USBDIV+1

26.12.12 PMC Master Clock Register

Register Name: PMC_MCKR

Address: 0xFFFFFC30

Access Type: Read/Write

31	30	29	28	27	26	25	24
–	–	–	–	–	–	–	–

23	22	21	20	19	18	17	16
–	–	–	–	–	–	–	–

15	14	13	12	11	10	9	8
–	–	–	PLLADIV2	–	–	MDIV	

7	6	5	4	3	2	1	0
–	–	–	PRES			CSS	

- **CSS: Master/Processor Clock Source Selection**

CSS		Clock Source Selection
0	0	Slow Clock is selected.
0	1	Main Clock is selected.
1	0	PLLA Output clock is selected.
1	1	UPLL Output clock is selected.

- **PRES: Master/Processor Clock Prescaler**

PRES			Master/Processor Clock Dividers Input Clock
0	0	0	Selected clock
0	0	1	Selected clock divided by 2
0	1	0	Selected clock divided by 4
0	1	1	Selected clock divided by 8
1	0	0	Selected clock divided by 16
1	0	1	Selected clock divided by 32
1	1	0	Selected clock divided by 64
1	1	1	Reserved

- **MDIV: Master Clock Division**

MDIV		Master Clock Division
0	0	Master Clock is Prescaler Output Clock divided by 1. Warning: SysClk DDR and DDRCK are not available.
0	1	Master Clock is Prescaler Output Clock divided by 2. SysClk DDR is equal to 2 x MCK. DDRCK is equal to MCK.
1	0	Master Clock is Prescaler Output Clock divided by 4. SysClk DDR is equal to 2 x MCK. DDRCK is equal to MCK.
1	1	Master Clock is Prescaler Output Clock divided by 3. SysClk DDR is equal to 2 x MCK. DDRCK is equal to MCK.

Note: It is forbidden to modify MDIV and CSS at the same access. Each field must be modified separately with a wait for MCKRDY flag between the first field modification and the second field modification.

- **PLLADIV2: PLLA divisor by 2**

PLLADIV2	PLLA Clock Division
0	PLLA clock frequency is divided by 1.
1	PLLA clock frequency is divided by 2.

26.12.13 PMC Programmable Clock Register

Register Name: PMC_PCKx

Address: 0xFFFFFC40

Access Type: Read/Write

31	30	29	28	27	26	25	24
–	–	–	–	–	–	–	–

23	22	21	20	19	18	17	16
–	–	–	–	–	–	–	–

15	14	13	12	11	10	9	8
–	–	–	–	–	–	–	SLCKMCK

7	6	5	4	3	2	1	0
–	–	–	PRES			CSS	

- **CSS: Master Clock Selection**

CSS		Clock Source Selection
0	0	Slow Clock or Master Clock may be selected depending on SLCKMCK field.
0	1	Main Clock is selected.
1	0	PLLACK/PLLADIV2 is selected.
1	1	UPLLCK is selected.

- **PRES: Programmable Clock Prescaler**

PRES			Programmable Clock
0	0	0	Selected clock
0	0	1	Selected clock divided by 2
0	1	0	Selected clock divided by 4
0	1	1	Selected clock divided by 8
1	0	0	Selected clock divided by 16
1	0	1	Selected clock divided by 32
1	1	0	Selected clock divided by 64
1	1	1	Reserved

- **SLCKMCK: Slow Clock or Master Clock Selection**

0 = Slow clock is selected

1 = Master clock is selected

To select between Slow Clock and Master Clock, the CSS field must be programmed to ‘00’.

26.12.14 PMC Interrupt Enable Register

Register Name: PMC_IER

Address: 0xFFFFFC60

Access Type: Write-only

31	30	29	28	27	26	25	24
–	–	–	–	–	–	–	–

23	22	21	20	19	18	17	16
–	–	–	–	–	–	–	–

15	14	13	12	11	10	9	8
–	–	–	–	PCK5	PCK4	PCKRDY1	PCKRDY0

7	6	5	4	3	2	1	0
–	LOCKU	_	–	MCKRDY	–	LOCKA	MOSCS

- **MOSCS: Main Oscillator Status Interrupt Enable**
- **LOCKA: PLL Lock Interrupt Enable**
- **MCKRDY: Master Clock Ready Interrupt Enable**
- **LOCKU: UTMI PLL Lock Interrupt Enable**
- **PCKRDYx: Programmable Clock Ready x Interrupt Enable**

0 = No effect.

1 = Enables the corresponding interrupt.

26.12.15 PMC Interrupt Disable Register

Register Name: PMC_IDR

Address: 0xFFFFFC64

Access Type: Write-only

31	30	29	28	27	26	25	24
–	–	–	–	–	–	–	–

23	22	21	20	19	18	17	16
–	–	–	–	–	–	–	–

15	14	13	12	11	10	9	8
–	–	–	–	PCK5	PCK4	PCKRDY1	PCKRDY0

7	6	5	4	3	2	1	0
–	LOCKU	–	–	MCKRDY	–	LOCKA	MOSCS

- **MOSCS: Main Oscillator Status Interrupt Disable**
- **LOCKA: PLLA Lock Interrupt Disable**
- **MCKRDY: Master Clock Ready Interrupt Disable**
- **LOCKU: UTMI PLL Lock Interrupt Disable**
- **PCKRDYx: Programmable Clock Ready x Interrupt Disable**

0 = No effect.

1 = Disables the corresponding interrupt.

26.12.16 PMC Status Register

Register Name: PMC_SR

Address: 0xFFFFFC68

Access Type: Read-only

31	30	29	28	27	26	25	24
–	–	–	–	–	–	–	–

23	22	21	20	19	18	17	16
–	–	–	–	–	–	–	–

15	14	13	12	11	10	9	8
–	–	–	–	PCK5	PCK4	PCKRDY1	PCKRDY0

7	6	5	4	3	2	1	0
–	LOCKU	–	–	MCKRDY	–	LOCKA	MOSCS

- **MOSCS: MOSCS Flag Status**

0 = Main oscillator is not stabilized.

1 = Main oscillator is stabilized.

- **LOCKA: PLLA Lock Status**

0 = PLLA is not locked

1 = PLLA is locked.

- **MCKRDY: Master Clock Status**

0 = Master Clock is not ready.

1 = Master Clock is ready.

- **LOCKU: UPLL Lock Status**

0 = UPLL is not locked

1 = UPLL is locked.

- **PCKRDYx: Programmable Clock Ready Status**

0 = Programmable Clock x is not ready.

1 = Programmable Clock x is ready.

26.12.17 PMC Interrupt Mask Register

Register Name: PMC_IMR

Address: 0xFFFFFC6C

Access Type: Read-only

31	30	29	28	27	26	25	24
–	–	–	–	–	–	–	–
23	22	21	20	19	18	17	16
–	–	–	–	–	–	–	–
15	14	13	12	11	10	9	8
–	–	–	–	PCK5	PCK4	PCKRDY1	PCKRDY0
7	6	5	4	3	2	1	0
–	LOCKU	–	–	MCKRDY	–	LOCKA	MOSCS

- **MOSCS: Main Oscillator Status Interrupt Mask**
- **LOCKA: PLLA Lock Interrupt Mask**
- **MCKRDY: Master Clock Ready Interrupt Mask**
- **LOCKU: UTMI PLL Lock Interrupt Mask**
- **PCKRDYx: Programmable Clock Ready x Interrupt Mask**

0 = The corresponding interrupt is enabled.

1 = The corresponding interrupt is disabled.

26.12.18 PLL Charge Pump Current Register

Register Name: PMC_PLLICPR

Address: 0xFFFFFC80

Access Type: Write-only

31	30	29	28	27	26	25	24
–	–	–	–	–	–	–	–
23	22	21	20	19	18	17	16
–	–	–	–	–	–	–	–
15	14	13	12	11	10	9	8
–	–	–	–	–	–	–	–
7	6	5	4	3	2	1	0
–	–	–	–	–	–	–	ICPLLA

- **ICPLLA: Charge Pump Current**

To optimize clock performance, this field must be programmed as specified in “PLL A Characteristics” in the Electrical Characteristics section of the product datasheet.

27. Advanced Interrupt Controller (AIC)

27.1 Description

The Advanced Interrupt Controller (AIC) is an 8-level priority, individually maskable, vectored interrupt controller, providing handling of up to thirty-two interrupt sources. It is designed to substantially reduce the software and real-time overhead in handling internal and external interrupts.

The AIC drives the nFIQ (fast interrupt request) and the nIRQ (standard interrupt request) inputs of an ARM processor. Inputs of the AIC are either internal peripheral interrupts or external interrupts coming from the product's pins.

The 8-level Priority Controller allows the user to define the priority for each interrupt source, thus permitting higher priority interrupts to be serviced even if a lower priority interrupt is being treated.

Internal interrupt sources can be programmed to be level sensitive or edge triggered. External interrupt sources can be programmed to be positive-edge or negative-edge triggered or high-level or low-level sensitive.

The fast forcing feature redirects any internal or external interrupt source to provide a fast interrupt rather than a normal interrupt.

27.2 Embedded Characteristics

- Controls the interrupt lines (nIRQ and nFIQ) of the ARM Processor
- Thirty-two individually maskable and vectored interrupt sources
  - Source 0 is reserved for the Fast Interrupt Input (FIQ)
  - Source 1 is reserved for system peripherals (PIT, RTT, PMC, DBGU, etc.)
  - Programmable Edge-triggered or Level-sensitive Internal Sources
  - Programmable Positive/Negative Edge-triggered or High/Low Level-sensitive
- One External Sources plus the Fast Interrupt signal
- 8-level Priority Controller
  - Drives the Normal Interrupt of the processor
  - Handles priority of the interrupt sources 1 to 31
  - Higher priority interrupts can be served during service of lower priority interrupt
- Vectoring
  - Optimizes Interrupt Service Routine Branch and Execution
  - One 32-bit Vector Register per interrupt source
  - Interrupt Vector Register reads the corresponding current Interrupt Vector
- Protect Mode
  - Easy debugging by preventing automatic operations when protect modes are enabled
- Fast Forcing
  - Permits redirecting any normal interrupt source on the Fast Interrupt of the processor

27.3 Block Diagram

Figure 27-1. Block Diagram

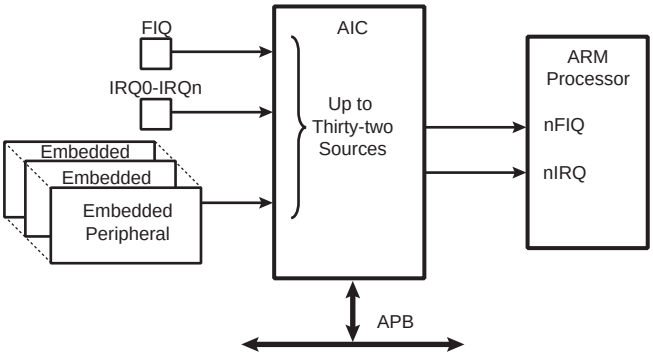

27.4 Application Block Diagram

Figure 27-2. Description of the Application Block

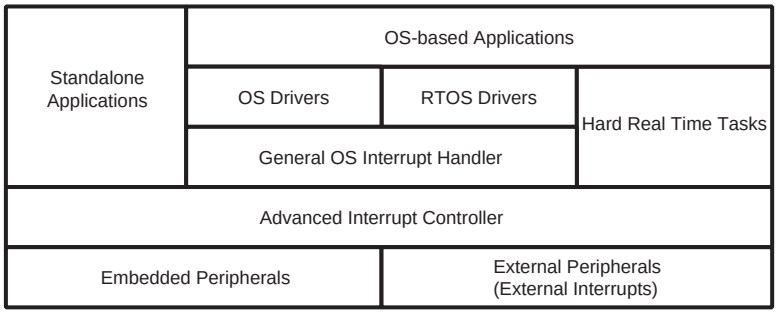

27.5 AIC Detailed Block Diagram

Figure 27-3. AIC Detailed Block Diagram

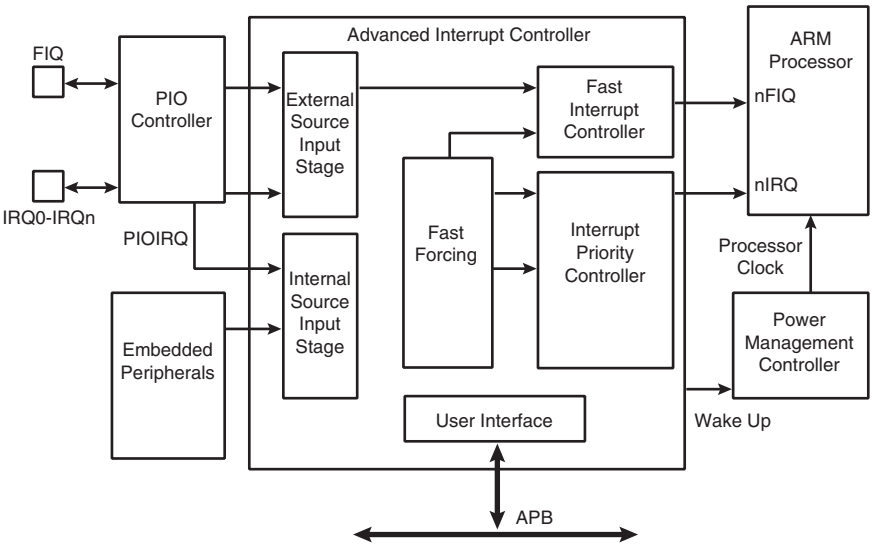

27.6 I/O Line Description

Table 27-1. I/O Line Description

Pin Name	Pin Description	Type
FIQ	Fast Interrupt	Input
IRQ0 - IRQn	Interrupt 0 - Interrupt n	Input

27.7 Product Dependencies

27.7.1 I/O Lines

The interrupt signals FIQ and IRQ0 to IRQn are normally multiplexed through the PIO controllers. Depending on the features of the PIO controller used in the product, the pins must be programmed in accordance with their assigned interrupt function. This is not applicable when the PIO controller used in the product is transparent on the input path.

Table 27-2. I/O Lines

Instance	Signal	I/O Line	Peripheral
AIC	FIQ	PD19	B
AIC	IRQ	PD18	B

27.7.2 Power Management

The Advanced Interrupt Controller is continuously clocked. The Power Management Controller has no effect on the Advanced Interrupt Controller behavior.

The assertion of the Advanced Interrupt Controller outputs, either nIRQ or nFIQ, wakes up the ARM processor while it is in Idle Mode. The General Interrupt Mask feature enables the AIC to wake up the processor without asserting the interrupt line of the processor, thus providing synchronization of the processor on an event.

27.7.3 Interrupt Sources

The Interrupt Source 0 is always located at FIQ. If the product does not feature an FIQ pin, the Interrupt Source 0 cannot be used.

The Interrupt Source 1 is always located at System Interrupt. This is the result of the OR-wiring of the system peripheral interrupt lines. When a system interrupt occurs, the service routine must first distinguish the cause of the interrupt. This is performed by reading successively the status registers of the above mentioned system peripherals.

The interrupt sources 2 to 31 can either be connected to the interrupt outputs of an embedded user peripheral or to external interrupt lines. The external interrupt lines can be connected directly, or through the PIO Controller.

The PIO Controllers are considered as user peripherals in the scope of interrupt handling. Accordingly, the PIO Controller interrupt lines are connected to the Interrupt Sources 2 to 31.

The peripheral identification defined at the product level corresponds to the interrupt source number (as well as the bit number controlling the clock of the peripheral). Consequently, to simplify the description of the functional operations and the user interface, the interrupt sources are named FIQ, SYS, and PID2 to PID31.

27.8 Functional Description

27.8.1 Interrupt Source Control

27.8.1.1 Interrupt Source Mode

The Advanced Interrupt Controller independently programs each interrupt source. The SRCTYPE field of the corresponding AIC_SMR (Source Mode Register) selects the interrupt condition of each source.

The internal interrupt sources wired on the interrupt outputs of the embedded peripherals can be programmed either in level-sensitive mode or in edge-triggered mode. The active level of the internal interrupts is not important for the user.

The external interrupt sources can be programmed either in high level-sensitive or low level-sensitive modes, or in positive edge-triggered or negative edge-triggered modes.

27.8.1.2 Interrupt Source Enabling

Each interrupt source, including the FIQ in source 0, can be enabled or disabled by using the command registers; AIC_IECR (Interrupt Enable Command Register) and AIC_IDCR (Interrupt Disable Command Register). This set of registers conducts enabling or disabling in one instruction. The interrupt mask can be read in the AIC_IMR register. A disabled interrupt does not affect servicing of other interrupts.

27.8.1.3 Interrupt Clearing and Setting

All interrupt sources programmed to be edge-triggered (including the FIQ in source 0) can be individually set or cleared by writing respectively the AIC_ISCR and AIC_ICCR registers. Clearing or setting interrupt sources programmed in level-sensitive mode has no effect.

The clear operation is perfunctory, as the software must perform an action to reinitialize the “memorization” circuitry activated when the source is programmed in edge-triggered mode. However, the set operation is available for auto-test or software debug purposes. It can also be used to execute an AIC-implementation of a software interrupt.

The AIC features an automatic clear of the current interrupt when the AIC_IVR (Interrupt Vector Register) is read. Only the interrupt source being detected by the AIC as the current interrupt is affected by this operation. (See “Priority Controller” on page 369.) The automatic clear reduces the operations required by the interrupt service routine entry code to reading the AIC_IVR. Note that the automatic interrupt clear is disabled if the interrupt source has the Fast Forcing feature enabled as it is considered uniquely as a FIQ source. (For further details, See “Fast Forcing” on page 373.)

The automatic clear of the interrupt source 0 is performed when AIC_FVR is read.

27.8.1.4 Interrupt Status

For each interrupt, the AIC operation originates in AIC_IPR (Interrupt Pending Register) and its mask in AIC_IMR (Interrupt Mask Register). AIC_IPR enables the actual activity of the sources, whether masked or not.

The AIC_ISR register reads the number of the current interrupt (see “Priority Controller” on page 369) and the register AIC_CISR gives an image of the signals nIRQ and nFIQ driven on the processor.

Each status referred to above can be used to optimize the interrupt handling of the systems.

27.8.1.5 *Internal Interrupt Source Input Stage*

Figure 27-4. Internal Interrupt Source Input Stage

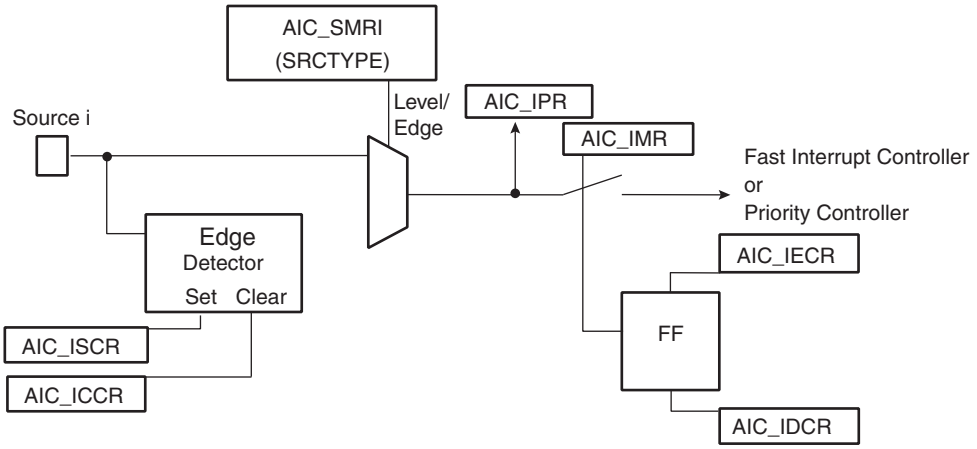

27.8.1.6 *External Interrupt Source Input Stage*

Figure 27-5. External Interrupt Source Input Stage

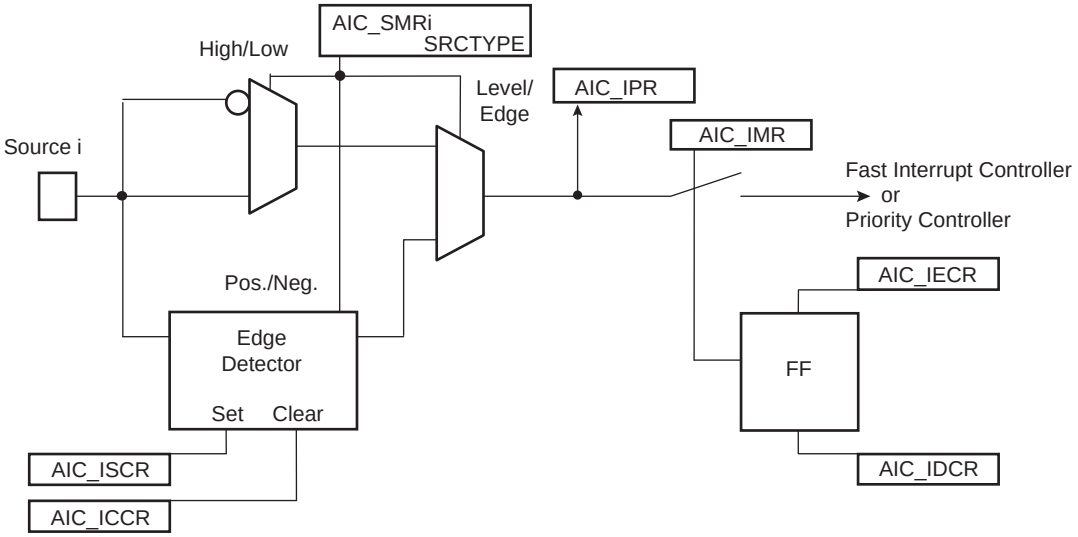

27.8.2 Interrupt Latencies

Global interrupt latencies depend on several parameters, including:

- The time the software masks the interrupts.
- Occurrence, either at the processor level or at the AIC level.
- The execution time of the instruction in progress when the interrupt occurs.
- The treatment of higher priority interrupts and the resynchronization of the hardware signals.

This section addresses only the hardware resynchronizations. It gives details of the latency times between the event on an external interrupt leading in a valid interrupt (edge or level) or the assertion of an internal interrupt source and the assertion of the nIRQ or nFIQ line on the processor. The resynchronization time depends on the programming of the interrupt source and on its type (internal or external). For the standard interrupt, resynchronization times are given assuming there is no higher priority in progress.

The PIO Controller multiplexing has no effect on the interrupt latencies of the external interrupt sources.

27.8.2.1 External Interrupt Edge Triggered Source

Figure 27-6. External Interrupt Edge Triggered Source

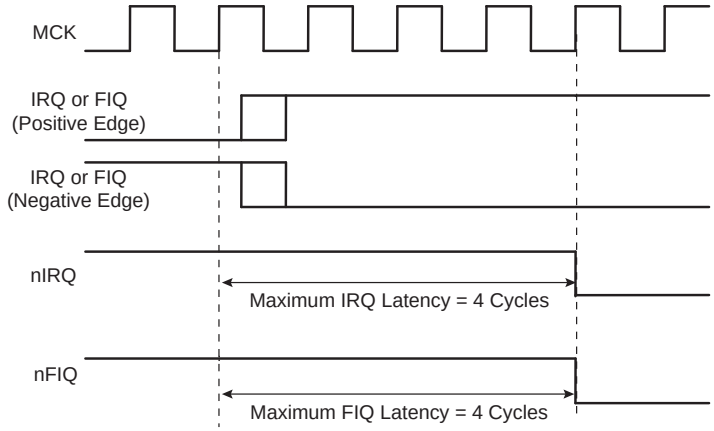

27.8.2.2 External Interrupt Level Sensitive Source

Figure 27-7. External Interrupt Level Sensitive Source

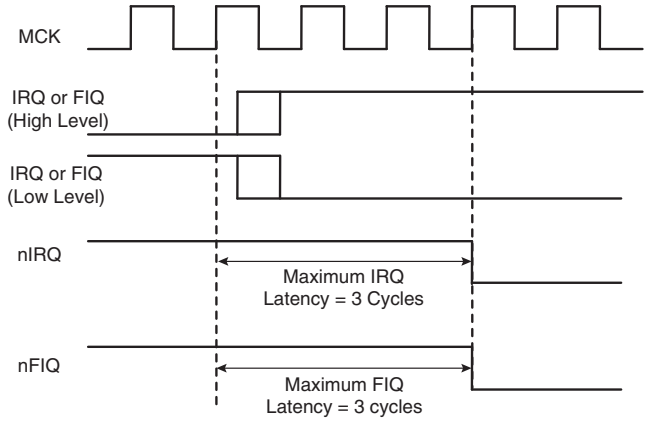

27.8.2.3 *Internal Interrupt Edge Triggered Source*

Figure 27-8. Internal Interrupt Edge Triggered Source

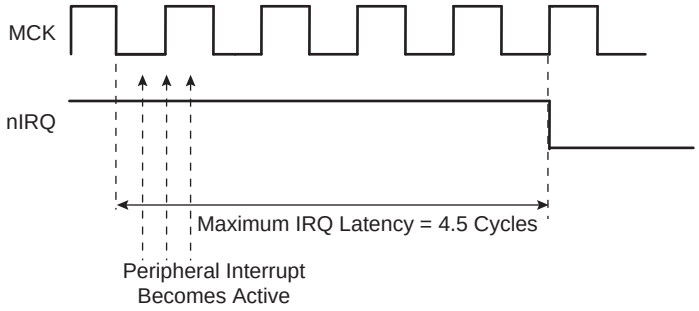

27.8.2.4 *Internal Interrupt Level Sensitive Source*

Figure 27-9. Internal Interrupt Level Sensitive Source

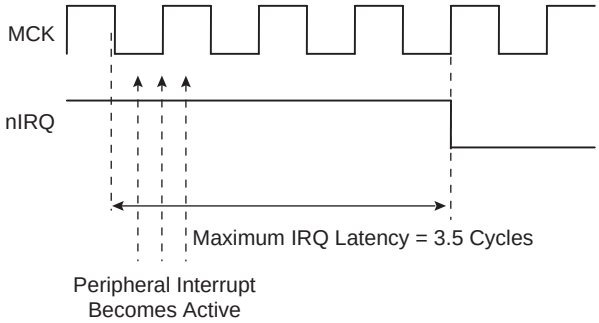

27.8.3 Normal Interrupt

27.8.3.1 *Priority Controller*

An 8-level priority controller drives the nIRQ line of the processor, depending on the interrupt conditions occurring on the interrupt sources 1 to 31 (except for those programmed in Fast Forcing).

Each interrupt source has a programmable priority level of 7 to 0, which is user-definable by writing the PRIOR field of the corresponding AIC_SMR (Source Mode Register). Level 7 is the highest priority and level 0 the lowest.

As soon as an interrupt condition occurs, as defined by the SRCTYPE field of the AIC_SMR (Source Mode Register), the nIRQ line is asserted. As a new interrupt condition might have happened on other interrupt sources since the nIRQ has been asserted, the priority controller determines the current interrupt at the time the AIC_IVR (Interrupt Vector Register) is read. **The read of AIC_IVR is the entry point of the interrupt handling** which allows the AIC to consider that the interrupt has been taken into account by the software.

The current priority level is defined as the priority level of the current interrupt.

If several interrupt sources of equal priority are pending and enabled when the AIC_IVR is read, the interrupt with the lowest interrupt source number is serviced first.

The nIRQ line can be asserted only if an interrupt condition occurs on an interrupt source with a higher priority. If an interrupt condition happens (or is pending) during the interrupt treatment in progress, it is delayed until the software indicates to the AIC the end of the current service by writing the AIC_EOICR (End of Interrupt Command Register). **The write of AIC_EOICR is the exit point of the interrupt handling**.

27.8.3.2 Interrupt Nesting

The priority controller utilizes interrupt nesting in order for the high priority interrupt to be handled during the service of lower priority interrupts. This requires the interrupt service routines of the lower interrupts to re-enable the interrupt at the processor level.

When an interrupt of a higher priority happens during an already occurring interrupt service routine, the nIRQ line is re-asserted. If the interrupt is enabled at the core level, the current execution is interrupted and the new interrupt service routine should read the AIC_IVR. At this time, the current interrupt number and its priority level are pushed into an embedded hardware stack, so that they are saved and restored when the higher priority interrupt servicing is finished and the AIC_EOICR is written.

The AIC is equipped with an 8-level wide hardware stack in order to support up to eight interrupt nestings pursuant to having eight priority levels.

27.8.3.3 Interrupt Vectoring

The interrupt handler addresses corresponding to each interrupt source can be stored in the registers AIC_SVR1 to AIC_SVR31 (Source Vector Register 1 to 31). When the processor reads AIC_IVR (Interrupt Vector Register), the value written into AIC_SVR corresponding to the current interrupt is returned.

This feature offers a way to branch in one single instruction to the handler corresponding to the current interrupt, as AIC_IVR is mapped at the absolute address 0xFFFF F100 and thus accessible from the ARM interrupt vector at address 0x0000 0018 through the following instruction:

```
LDR  PC,[PC,# -&F20]
```

When the processor executes this instruction, it loads the read value in AIC_IVR in its program counter, thus branching the execution on the correct interrupt handler.

This feature is often not used when the application is based on an operating system (either real time or not). Operating systems often have a single entry point for all the interrupts and the first task performed is to discern the source of the interrupt.

However, it is strongly recommended to port the operating system on AT91 products by supporting the interrupt vectoring. This can be performed by defining all the AIC_SVR of the interrupt source to be handled by the operating system at the address of its interrupt handler. When doing so, the interrupt vectoring permits a critical interrupt to transfer the execution on a specific very fast handler and not onto the operating system's general interrupt handler. This facilitates the support of hard real-time tasks (input/outputs of voice/audio buffers and software peripheral handling) to be handled efficiently and independently of the application running under an operating system.

27.8.3.4 Interrupt Handlers

This section gives an overview of the fast interrupt handling sequence when using the AIC. It is assumed that the programmer understands the architecture of the ARM processor, and especially the processor interrupt modes and the associated status bits.

It is assumed that:

1. The Advanced Interrupt Controller has been programmed, AIC_SVR registers are loaded with corresponding interrupt service routine addresses and interrupts are enabled.
2. The instruction at the ARM interrupt exception vector address is required to work with the vectoring

```
LDR PC, [PC, # -&F20]
```

When nIRQ is asserted, if the bit "I" of CPSR is 0, the sequence is as follows:

1. The CPSR is stored in SPSR_irq, the current value of the Program Counter is loaded in the Interrupt link register (R14_irq) and the Program Counter (R15) is loaded with 0x18. In the following cycle during fetch at address 0x1C, the ARM core adjusts R14_irq, decrementing it by four.
2. The ARM core enters Interrupt mode, if it has not already done so.
3. When the instruction loaded at address 0x18 is executed, the program counter is loaded with the value read in AIC_IVR. Reading the AIC_IVR has the following effects:
   – Sets the current interrupt to be the pending and enabled interrupt with the highest priority. The current level is the priority level of the current interrupt.
   – De-asserts the nIRQ line on the processor. Even if vectoring is not used, AIC_IVR must be read in order to de-assert nIRQ.
   – Automatically clears the interrupt, if it has been programmed to be edge-triggered.
   – Pushes the current level and the current interrupt number on to the stack.
   – Returns the value written in the AIC_SVR corresponding to the current interrupt.
4. The previous step has the effect of branching to the corresponding interrupt service routine. This should start by saving the link register (R14_irq) and SPSR_IRQ. The link register must be decremented by four when it is saved if it is to be restored directly into the program counter at the end of the interrupt. For example, the instruction `SUB PC, LR, #4` may be used.
5. Further interrupts can then be unmasked by clearing the “I” bit in CPSR, allowing re-assertion of the nIRQ to be taken into account by the core. This can happen if an interrupt with a higher priority than the current interrupt occurs.
6. The interrupt handler can then proceed as required, saving the registers that will be used and restoring them at the end. During this phase, an interrupt of higher priority than the current level will restart the sequence from step 1.

Note: If the interrupt is programmed to be level sensitive, the source of the interrupt must be cleared during this phase.

7. The “I” bit in CPSR must be set in order to mask interrupts before exiting to ensure that the interrupt is completed in an orderly manner.
8. The End of Interrupt Command Register (AIC_EOICR) must be written in order to indicate to the AIC that the current interrupt is finished. This causes the current level to be popped from the stack, restoring the previous current level if one exists on the stack. If another interrupt is pending, with lower or equal priority than the old current level but with higher priority than the new current level, the nIRQ line is re-asserted, but the interrupt sequence does not immediately start because the “I” bit is set in the core. SPSR_irq is restored. Finally, the saved value of the link register is restored directly into the PC. This has the effect of returning from the interrupt to whatever was being executed before, and of loading the CPSR with the stored SPSR, masking or unmasking the interrupts depending on the state saved in SPSR_irq.

Note: The “I” bit in SPSR is significant. If it is set, it indicates that the ARM core was on the verge of masking an interrupt when the mask instruction was interrupted. Hence, when SPSR is restored, the mask instruction is completed (interrupt is masked).

27.8.4 Fast Interrupt

27.8.4.1 Fast Interrupt Source

The interrupt source 0 is the only source which can raise a fast interrupt request to the processor except if fast forcing is used. The interrupt source 0 is generally connected to a FIQ pin of the product, either directly or through a PIO Controller.

27.8.4.2 Fast Interrupt Control

The fast interrupt logic of the AIC has no priority controller. The mode of interrupt source 0 is programmed with the AIC_SMR0 and the field PRIOR of this register is not used even if it reads what has been written. The field SRCTYPE of AIC_SMR0 enables programming the fast interrupt source to be positive-edge triggered or negative-edge triggered or high-level sensitive or low-level sensitive

Writing 0x1 in the AIC_IECR (Interrupt Enable Command Register) and AIC_IDCR (Interrupt Disable Command Register) respectively enables and disables the fast interrupt. The bit 0 of AIC_IMR (Interrupt Mask Register) indicates whether the fast interrupt is enabled or disabled.

27.8.4.3 Fast Interrupt Vectoring

The fast interrupt handler address can be stored in AIC_SVR0 (Source Vector Register 0). The value written into this register is returned when the processor reads AIC_FVR (Fast Vector Register). This offers a way to branch in one single instruction to the interrupt handler, as AIC_FVR is mapped at the absolute address 0xFFFF F104 and thus accessible from the ARM fast interrupt vector at address 0x0000 001C through the following instruction:

```
LDR  PC,[PC,# -&F20]
```

When the processor executes this instruction it loads the value read in AIC_FVR in its program counter, thus branching the execution on the fast interrupt handler. It also automatically performs the clear of the fast interrupt source if it is programmed in edge-triggered mode.

27.8.4.4 Fast Interrupt Handlers

This section gives an overview of the fast interrupt handling sequence when using the AIC. It is assumed that the programmer understands the architecture of the ARM processor, and especially the processor interrupt modes and associated status bits.

Assuming that:

1. The Advanced Interrupt Controller has been programmed, AIC_SVR0 is loaded with the fast interrupt service routine address, and the interrupt source 0 is enabled.
2. The Instruction at address 0x1C (FIQ exception vector address) is required to vector the fast interrupt:
   `LDR PC, [PC, # -&F20]`
3. The user does not need nested fast interrupts.

When nFIQ is asserted, if the bit “F” of CPSR is 0, the sequence is:

1. The CPSR is stored in SPSR_fiq, the current value of the program counter is loaded in the FIQ link register (R14_FIQ) and the program counter (R15) is loaded with 0x1C. In the following cycle, during fetch at address 0x20, the ARM core adjusts R14_fiq, decrementing it by four.
2. The ARM core enters FIQ mode.
3. When the instruction loaded at address 0x1C is executed, the program counter is loaded with the value read in AIC_FVR. Reading the AIC_FVR has effect of automatically clearing the fast interrupt, if it has been programmed to be edge triggered. In this case only, it de-asserts the nFIQ line on the processor.
4. The previous step enables branching to the corresponding interrupt service routine. It is not necessary to save the link register R14_fiq and SPSR_fiq if nested fast interrupts are not needed.
5. The Interrupt Handler can then proceed as required. It is not necessary to save registers R8 to R13 because FIQ mode has its own dedicated registers and the user R8 to R13 are banked. The other registers, R0 to R7, must be saved before being used, and restored at the end (before the next step). Note that if the fast interrupt is programmed to be level sensitive, the source of the interrupt must be cleared during this phase in order to de-assert the interrupt source 0.
6. Finally, the Link Register R14_fiq is restored into the PC after decrementing it by four (with instruction `SUB PC, LR, #4` for example). This has the effect of returning from the interrupt to whatever was being executed before, loading the CPSR with the SPSR and masking or unmasking the fast interrupt depending on the state saved in the SPSR.

Note: The “F” bit in SPSR is significant. If it is set, it indicates that the ARM core was just about to mask FIQ interrupts when the mask instruction was interrupted. Hence when the SPSR is restored, the interrupted instruction is completed (FIQ is masked).

Another way to handle the fast interrupt is to map the interrupt service routine at the address of the ARM vector 0x1C. This method does not use the vectoring, so that reading AIC_FVR must be performed at the very beginning of the handler operation. However, this method saves the execution of a branch instruction.

27.8.4.5 *Fast Forcing*

The Fast Forcing feature of the advanced interrupt controller provides redirection of any normal Interrupt source on the fast interrupt controller.

Fast Forcing is enabled or disabled by writing to the Fast Forcing Enable Register (AIC_FFER) and the Fast Forcing Disable Register (AIC_FFDR). Writing to these registers results in an update of the Fast Forcing Status Register (AIC_FFSR) that controls the feature for each internal or external interrupt source.

When Fast Forcing is disabled, the interrupt sources are handled as described in the previous pages.

When Fast Forcing is enabled, the edge/level programming and, in certain cases, edge detection of the interrupt source is still active but the source cannot trigger a normal interrupt to the processor and is not seen by the priority handler.

If the interrupt source is programmed in level-sensitive mode and an active level is sampled, Fast Forcing results in the assertion of the nFIQ line to the core.

If the interrupt source is programmed in edge-triggered mode and an active edge is detected, Fast Forcing results in the assertion of the nFIQ line to the core.

The Fast Forcing feature does not affect the Source 0 pending bit in the Interrupt Pending Register (AIC_IPR).

The FIQ Vector Register (AIC_FVR) reads the contents of the Source Vector Register 0 (AIC_SVR0), whatever the source of the fast interrupt may be. The read of the FVR does not clear the Source 0 when the fast forcing feature is used and the interrupt source should be cleared by writing to the Interrupt Clear Command Register (AIC_ICCR).

All enabled and pending interrupt sources that have the fast forcing feature enabled and that are programmed in edge-triggered mode must be cleared by writing to the Interrupt Clear Command Register. In doing so, they are cleared independently and thus lost interrupts are prevented.

The read of AIC_IVR does not clear the source that has the fast forcing feature enabled.

The source 0, reserved to the fast interrupt, continues operating normally and becomes one of the Fast Interrupt sources.

Figure 27-10. Fast Forcing

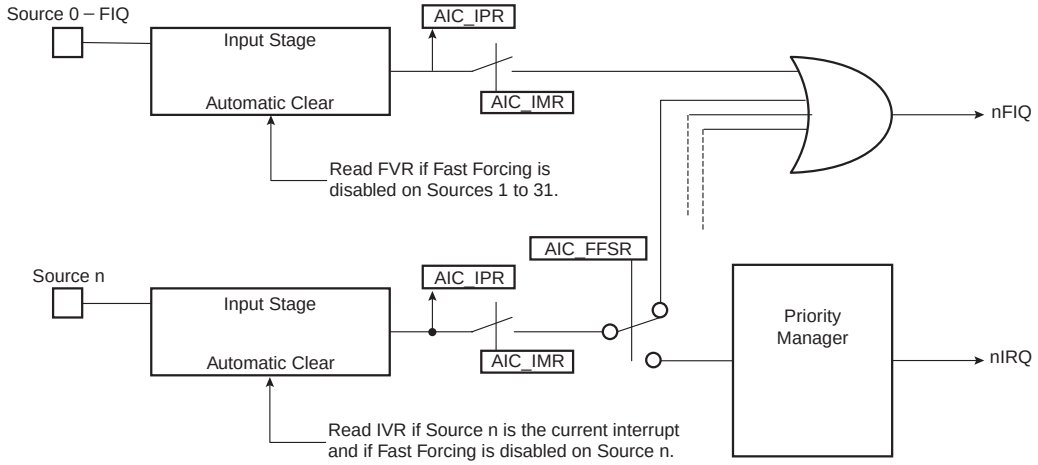

27.8.5 Protect Mode

The Protect Mode permits reading the Interrupt Vector Register without performing the associated automatic operations. This is necessary when working with a debug system. When a debugger, working either with a Debug

Monitor or the ARM processor's ICE, stops the applications and updates the opened windows, it might read the AIC User Interface and thus the IVR. This has undesirable consequences:

- If an enabled interrupt with a higher priority than the current one is pending, it is stacked.
- If there is no enabled pending interrupt, the spurious vector is returned.

In either case, an End of Interrupt command is necessary to acknowledge and to restore the context of the AIC. This operation is generally not performed by the debug system as the debug system would become strongly intrusive and cause the application to enter an undesired state.

This is avoided by using the Protect Mode. Writing PROT in AIC_DCR (Debug Control Register) at 0x1 enables the Protect Mode.

When the Protect Mode is enabled, the AIC performs interrupt stacking only when a write access is performed on the AIC_IVR. Therefore, the Interrupt Service Routines must write (arbitrary data) to the AIC_IVR just after reading it. The new context of the AIC, including the value of the Interrupt Status Register (AIC_ISR), is updated with the current interrupt only when AIC_IVR is written.

An AIC_IVR read on its own (e.g., by a debugger), modifies neither the AIC context nor the AIC_ISR. Extra AIC_IVR reads perform the same operations. However, it is recommended to not stop the processor between the read and the write of AIC_IVR of the interrupt service routine to make sure the debugger does not modify the AIC context.

To summarize, in normal operating mode, the read of AIC_IVR performs the following operations within the AIC:

1. Calculates active interrupt (higher than current or spurious).
2. Determines and returns the vector of the active interrupt.
3. Memorizes the interrupt.
4. Pushes the current priority level onto the internal stack.
5. Acknowledges the interrupt.

However, while the Protect Mode is activated, only operations 1 to 3 are performed when AIC_IVR is read. Operations 4 and 5 are only performed by the AIC when AIC_IVR is written.

Software that has been written and debugged using the Protect Mode runs correctly in Normal Mode without modification. However, in Normal Mode the AIC_IVR write has no effect and can be removed to optimize the code.

27.8.6 Spurious Interrupt

The Advanced Interrupt Controller features protection against spurious interrupts. A spurious interrupt is defined as being the assertion of an interrupt source long enough for the AIC to assert the nIRQ, but no longer present when AIC_IVR is read. This is most prone to occur when:

- An external interrupt source is programmed in level-sensitive mode and an active level occurs for only a short time.
- An internal interrupt source is programmed in level sensitive and the output signal of the corresponding embedded peripheral is activated for a short time. (As in the case for the Watchdog.)
- An interrupt occurs just a few cycles before the software begins to mask it, thus resulting in a pulse on the interrupt source.

The AIC detects a spurious interrupt at the time the AIC_IVR is read while no enabled interrupt source is pending. When this happens, the AIC returns the value stored by the programmer in AIC_SPU (Spurious Vector Register). The programmer must store the address of a spurious interrupt handler in AIC_SPU as part of the application, to enable an as fast as possible return to the normal execution flow. This handler writes in AIC_EOICR and performs a return from interrupt.

27.8.7 General Interrupt Mask

The AIC features a General Interrupt Mask bit to prevent interrupts from reaching the processor. Both the nIRQ and the nFIQ lines are driven to their inactive state if the bit GMSK in AIC_DCR (Debug Control Register) is set. However, this mask does not prevent waking up the processor if it has entered Idle Mode. This function facilitates synchronizing the processor on a next event and, as soon as the event occurs, performs subsequent operations without having to handle an interrupt. It is strongly recommended to use this mask with caution.

27.9 Advanced Interrupt Controller (AIC) User Interface

27.9.1 Base Address

The AIC is mapped at the address **0xFFFF F000**. It has a total 4-Kbyte addressing space. This permits the vectoring feature, as the PC-relative load/store instructions of the ARM processor support only a ± 4-Kbyte offset.

Table 27-3. Register Mapping

Offset	Register	Name	Access	Reset
0x00	Source Mode Register 0	AIC_SMR0	Read-write	0x0
0x04	Source Mode Register 1	AIC_SMR1	Read-write	0x0
---	---	---	---	---
0x7C	Source Mode Register 31	AIC_SMR31	Read-write	0x0
0x80	Source Vector Register 0	AIC_SVR0	Read-write	0x0
0x84	Source Vector Register 1	AIC_SVR1	Read-write	0x0
---	---	---	---	---
0xFC	Source Vector Register 31	AIC_SVR31	Read-write	0x0
0x100	Interrupt Vector Register	AIC_IVR	Read-only	0x0
0x104	FIQ Interrupt Vector Register	AIC_FVR	Read-only	0x0
0x108	Interrupt Status Register	AIC_ISR	Read-only	0x0
0x10C	Interrupt Pending Register[2]	AIC_IPR	Read-only	0x0[1]
0x110	Interrupt Mask Register[2]	AIC_IMR	Read-only	0x0
0x114	Core Interrupt Status Register	AIC_CISR	Read-only	0x0
0x118 - 0x11C	Reserved	---	---	---
0x120	Interrupt Enable Command Register[2]	AIC_IECR	Write-only	---
0x124	Interrupt Disable Command Register[2]	AIC_IDCR	Write-only	---
0x128	Interrupt Clear Command Register[2]	AIC_ICCR	Write-only	---
0x12C	Interrupt Set Command Register[2]	AIC_ISCR	Write-only	---
0x130	End of Interrupt Command Register	AIC_EOICR	Write-only	---
0x134	Spurious Interrupt Vector Register	AIC_SPU	Read-write	0x0
0x138	Debug Control Register	AIC_DCR	Read-write	0x0
0x13C	Reserved	---	---	---
0x140	Fast Forcing Enable Register[2]	AIC_FFER	Write-only	---
0x144	Fast Forcing Disable Register[2]	AIC_FFDR	Write-only	---
0x148	Fast Forcing Status Register[2]	AIC_FFSR	Read-only	0x0
0x14C - 0x1E0	Reserved	---	---	---
0x1EC - 0x1FC	Reserved			

Notes:
1. The reset value of this register depends on the level of the external interrupt source. All other sources are cleared at reset, thus not pending.
2. PID2...PID31 bit fields refer to the identifiers as defined in the Peripheral Identifiers Section of the product datasheet.
3. Values in the Version Register vary with the version of the IP block implementation.

27.9.2 AIC Source Mode Register

Register Name: AIC_SMR0..AIC_SMR31

Address: 0xFFFFF000

Access Type: Read-write

Reset Value: 0x0

31	30	29	28	27	26	25	24
–	–	–	–	–	–	–	–
23	22	21	20	19	18	17	16
–	–	–	–	–	–	–	–
15	14	13	12	11	10	9	8
–	–	–	–	–	–	–	–
7	6	5	4	3	2	1	0
–	SRCTYPE		–	–	PRIOR		

- **PRIOR: Priority Level**

Programs the priority level for all sources except FIQ source (source 0).

The priority level can be between 0 (lowest) and 7 (highest).

The priority level is not used for the FIQ in the related SMR register AIC_SMRx.

- **SRCTYPE: Interrupt Source Type**

The active level or edge is not programmable for the internal interrupt sources.

SRCTYPE		Internal Interrupt Sources	External Interrupt Sources
0	0	High level Sensitive	Low level Sensitive
0	1	Positive edge triggered	Negative edge triggered
1	0	High level Sensitive	High level Sensitive
1	1	Positive edge triggered	Positive edge triggered

27.9.3 AIC Source Vector Register

Register Name: AIC_SVR0..AIC_SVR31

Address: 0xFFFFF080

Access Type: Read-write

Reset Value: 0x0

31	30	29	28	27	26	25	24
VECTOR							
23	22	21	20	19	18	17	16
VECTOR							
15	14	13	12	11	10	9	8
VECTOR							
7	6	5	4	3	2	1	0
VECTOR							

- **VECTOR: Source Vector**

The user may store in these registers the addresses of the corresponding handler for each interrupt source.

27.9.4 AIC Interrupt Vector Register

Register Name: AIC_IVR

Address: 0xFFFFF100

Access Type: Read-only

Reset Value: 0x0

31	30	29	28	27	26	25	24
IRQV							
23	22	21	20	19	18	17	16
IRQV							
15	14	13	12	11	10	9	8
IRQV							
7	6	5	4	3	2	1	0
IRQV							

- **IRQV: Interrupt Vector Register**

The Interrupt Vector Register contains the vector programmed by the user in the Source Vector Register corresponding to the current interrupt.

The Source Vector Register is indexed using the current interrupt number when the Interrupt Vector Register is read.

When there is no current interrupt, the Interrupt Vector Register reads the value stored in AIC_SPU.

27.9.5 AIC FIQ Vector Register

Register Name: AIC_FVR

Address: 0xFFFFF104

Access Type: Read-only

Reset Value: 0x0

31	30	29	28	27	26	25	24
FIQV							

23	22	21	20	19	18	17	16
FIQV							

15	14	13	12	11	10	9	8
FIQV							

7	6	5	4	3	2	1	0
FIQV							

- **FIQV: FIQ Vector Register**

The FIQ Vector Register contains the vector programmed by the user in the Source Vector Register 0. When there is no fast interrupt, the FIQ Vector Register reads the value stored in AIC_SPU.

27.9.6 AIC Interrupt Status Register

Register Name: AIC_ISR

Address: 0xFFFFF108

Access Type: Read-only

Reset Value: 0x0

31	30	29	28	27	26	25	24
–	–	–	–	–	–	–	–

23	22	21	20	19	18	17	16
–	–	–	–	–	–	–	–

15	14	13	12	11	10	9	8
–	–	–	–	–	–	–	–

7	6	5	4	3	2	1	0
–	–	–	IRQID				

- **IRQID: Current Interrupt Identifier**

The Interrupt Status Register returns the current interrupt source number.

27.9.7 AIC Interrupt Pending Register

Register Name: AIC_IPR

Address: 0xFFFFF10C

Access Type: Read-only

Reset Value: 0x0

31	30	29	28	27	26	25	24
PID31	PID30	PID29	PID28	PID27	PID26	PID25	PID24
23	22	21	20	19	18	17	16
PID23	PID22	PID21	PID20	PID19	PID18	PID17	PID16
15	14	13	12	11	10	9	8
PID15	PID14	PID13	PID12	PID11	PID10	PID9	PID8
7	6	5	4	3	2	1	0
PID7	PID6	PID5	PID4	PID3	PID2	SYS	FIQ

- **FIQ, SYS, PID2-PID31: Interrupt Pending**

0 = Corresponding interrupt is not pending.

1 = Corresponding interrupt is pending.

27.9.8 AIC Interrupt Mask Register

Register Name: AIC_IMR

Address: 0xFFFFF110

Access Type: Read-only

Reset Value: 0x0

31	30	29	28	27	26	25	24
PID31	PID30	PID29	PID28	PID27	PID26	PID25	PID24
23	22	21	20	19	18	17	16
PID23	PID22	PID21	PID20	PID19	PID18	PID17	PID16
15	14	13	12	11	10	9	8
PID15	PID14	PID13	PID12	PID11	PID10	PID9	PID8
7	6	5	4	3	2	1	0
PID7	PID6	PID5	PID4	PID3	PID2	SYS	FIQ

- **FIQ, SYS, PID2-PID31: Interrupt Mask**

0 = Corresponding interrupt is disabled.

1 = Corresponding interrupt is enabled.

27.9.9 AIC Core Interrupt Status Register

Register Name: AIC_CISR

Address: 0xFFFFF114

Access Type: Read-only

Reset Value: 0x0

31	30	29	28	27	26	25	24
–	–	–	–	–	–	–	–
23	22	21	20	19	18	17	16
–	–	–	–	–	–	–	–
15	14	13	12	11	10	9	8
–	–	–	–	–	–	–	–
7	6	5	4	3	2	1	0
–	–	–	–	–	–	NIRQ	NFIQ

- **NFIQ: NFIQ Status**

0 = nFIQ line is deactivated.

1 = nFIQ line is active.

- **NIRQ: NIRQ Status**

0 = nIRQ line is deactivated.

1 = nIRQ line is active.

27.9.10 AIC Interrupt Enable Command Register

Register Name: AIC_IECR

Address: 0xFFFFF120

Access Type: Write-only

31	30	29	28	27	26	25	24
PID31	PID30	PID29	PID28	PID27	PID26	PID25	PID24
23	22	21	20	19	18	17	16
PID23	PID22	PID21	PID20	PID19	PID18	PID17	PID16
15	14	13	12	11	10	9	8
PID15	PID14	PID13	PID12	PID11	PID10	PID9	PID8
7	6	5	4	3	2	1	0
PID7	PID6	PID5	PID4	PID3	PID2	SYS	FIQ

- **FIQ, SYS, PID2-PID31: Interrupt Enable**

0 = No effect.

1 = Enables corresponding interrupt.

27.9.11 AIC Interrupt Disable Command Register

Register Name: AIC_IDCR

Address: 0xFFFFF124

Access Type: Write-only

31	30	29	28	27	26	25	24
PID31	PID30	PID29	PID28	PID27	PID26	PID25	PID24
23	22	21	20	19	18	17	16
PID23	PID22	PID21	PID20	PID19	PID18	PID17	PID16
15	14	13	12	11	10	9	8
PID15	PID14	PID13	PID12	PID11	PID10	PID9	PID8
7	6	5	4	3	2	1	0
PID7	PID6	PID5	PID4	PID3	PID2	SYS	FIQ

- **FIQ, SYS, PID2-PID31: Interrupt Disable**

0 = No effect.

1 = Disables corresponding interrupt.

27.9.12 AIC Interrupt Clear Command Register

Register Name: AIC_ICCR

Address: 0xFFFFF128

Access Type: Write-only

31	30	29	28	27	26	25	24
PID31	PID30	PID29	PID28	PID27	PID26	PID25	PID24
23	22	21	20	19	18	17	16
PID23	PID22	PID21	PID20	PID19	PID18	PID17	PID16
15	14	13	12	11	10	9	8
PID15	PID14	PID13	PID12	PID11	PID10	PID9	PID8
7	6	5	4	3	2	1	0
PID7	PID6	PID5	PID4	PID3	PID2	SYS	FIQ

- **FIQ, SYS, PID2-PID31: Interrupt Clear**

0 = No effect.

1 = Clears corresponding interrupt.

27.9.13 AIC Interrupt Set Command Register

Register Name: AIC_ISCR

Address: 0xFFFFF12C

Access Type: Write-only

31	30	29	28	27	26	25	24
PID31	PID30	PID29	PID28	PID27	PID26	PID25	PID24
23	22	21	20	19	18	17	16
PID23	PID22	PID21	PID20	PID19	PID18	PID17	PID16
15	14	13	12	11	10	9	8
PID15	PID14	PID13	PID12	PID11	PID10	PID9	PID8
7	6	5	4	3	2	1	0
PID7	PID6	PID5	PID4	PID3	PID2	SYS	FIQ

- **FIQ, SYS, PID2-PID31: Interrupt Set**

0 = No effect.

1 = Sets corresponding interrupt.

27.9.14 AIC End of Interrupt Command Register

Register Name: AIC_EOICR

Address: 0xFFFFF130

Access Type: Write-only

31	30	29	28	27	26	25	24
–	–	–	–	–	–	–	–
23	22	21	20	19	18	17	16
–	–	–	–	–	–	–	–
15	14	13	12	11	10	9	8
–	–	–	–	–	–	–	–
7	6	5	4	3	2	1	0
–	–	–	–	–	–	–	–

The End of Interrupt Command Register is used by the interrupt routine to indicate that the interrupt treatment is complete. Any value can be written because it is only necessary to make a write to this register location to signal the end of interrupt treatment.

27.9.15 AIC Spurious Interrupt Vector Register

Register Name: AIC_SPU

Address: 0xFFFFF134

Access Type: Read-write

Reset Value: 0x0

31	30	29	28	27	26	25	24
SIVR							
23	22	21	20	19	18	17	16
SIVR							
15	14	13	12	11	10	9	8
SIVR							
7	6	5	4	3	2	1	0
SIVR							

- **SIVR: Spurious Interrupt Vector Register**

The user may store the address of a spurious interrupt handler in this register. The written value is returned in AIC_IVR in case of a spurious interrupt and in AIC_FVR in case of a spurious fast interrupt.

27.9.16 AIC Debug Control Register

Register Name: AIC_DCR

Address: 0xFFFFF138

Access Type: Read-write

Reset Value: 0x0

31	30	29	28	27	26	25	24
–	–	–	–	–	–	–	–
23	22	21	20	19	18	17	16
–	–	–	–	–	–	–	–
15	14	13	12	11	10	9	8
–	–	–	–	–	–	–	–
7	6	5	4	3	2	1	0
–	–	–	–	–	–	GMSK	PROT

- **PROT: Protection Mode**

0 = The Protection Mode is disabled.

1 = The Protection Mode is enabled.

- **GMSK: General Mask**

0 = The nIRQ and nFIQ lines are normally controlled by the AIC.

1 = The nIRQ and nFIQ lines are tied to their inactive state.

27.9.17 AIC Fast Forcing Enable Register

Register Name: AIC_FFER

Address: 0xFFFFF140

Access Type: Write-only

31	30	29	28	27	26	25	24
PID31	PID30	PID29	PID28	PID27	PID26	PID25	PID24
23	22	21	20	19	18	17	16
PID23	PID22	PID21	PID20	PID19	PID18	PID17	PID16
15	14	13	12	11	10	9	8
PID15	PID14	PID13	PID12	PID11	PID10	PID9	PID8
7	6	5	4	3	2	1	0
PID7	PID6	PID5	PID4	PID3	PID2	SYS	–

- **SYS, PID2-PID31: Fast Forcing Enable**

0 = No effect.

1 = Enables the fast forcing feature on the corresponding interrupt.

27.9.18 AIC Fast Forcing Disable Register

Register Name: AIC_FFDR

Address: 0xFFFFF144

Access Type: Write-only

31	30	29	28	27	26	25	24
PID31	PID30	PID29	PID28	PID27	PID26	PID25	PID24
23	22	21	20	19	18	17	16
PID23	PID22	PID21	PID20	PID19	PID18	PID17	PID16
15	14	13	12	11	10	9	8
PID15	PID14	PID13	PID12	PID11	PID10	PID9	PID8
7	6	5	4	3	2	1	0
PID7	PID6	PID5	PID4	PID3	PID2	SYS	–

- **SYS, PID2-PID31: Fast Forcing Disable**

0 = No effect.

1 = Disables the Fast Forcing feature on the corresponding interrupt.

27.9.19 AIC Fast Forcing Status Register

Register Name: AIC_FFSR

Address: 0xFFFFF148

Access Type: Read-only

31	30	29	28	27	26	25	24
PID31	PID30	PID29	PID28	PID27	PID26	PID25	PID24
23	22	21	20	19	18	17	16
PID23	PID22	PID21	PID20	PID19	PID18	PID17	PID16
15	14	13	12	11	10	9	8
PID15	PID14	PID13	PID12	PID11	PID10	PID9	PID8
7	6	5	4	3	2	1	0
PID7	PID6	PID5	PID4	PID3	PID2	SYS	–

- **SYS, PID2-PID31: Fast Forcing Status**

0 = The Fast Forcing feature is disabled on the corresponding interrupt.

1 = The Fast Forcing feature is enabled on the corresponding interrupt.

28. Debug Unit (DBGU)

28.1 Description

The Debug Unit provides a single entry point from the processor for access to all the debug capabilities of Atmel's ARM-based systems.

The Debug Unit features a two-pin UART that can be used for several debug and trace purposes and offers an ideal medium for in-situ programming solutions and debug monitor communications. The Debug Unit two-pin UART can be used stand-alone for general purpose serial communication. Moreover, the association with two peripheral data controller channels permits packet handling for these tasks with processor time reduced to a minimum.

The Debug Unit also makes the Debug Communication Channel (DCC) signals provided by the In-circuit Emulator of the ARM processor visible to the software. These signals indicate the status of the DCC read and write registers and generate an interrupt to the ARM processor, making possible the handling of the DCC under interrupt control.

Chip Identifier registers permit recognition of the device and its revision. These registers inform as to the sizes and types of the on-chip memories, as well as the set of embedded peripherals.

Finally, the Debug Unit features a Force NTRST capability that enables the software to decide whether to prevent access to the system via the In-circuit Emulator. This permits protection of the code, stored in ROM.

28.2 Embedded Characteristics

- Composed of two functions
  - Two-pin UART
  - Debug Communication Channel (DCC) support
- Two-pin UART
  - Implemented features are 100% compatible with the standard Atmel USART
  - Independent receiver and transmitter with a common programmable Baud Rate Generator
  - Even, Odd, Mark or Space Parity Generation
  - Parity, Framing and Overrun Error Detection
  - Automatic Echo, Local Loopback and Remote Loopback Channel Modes
  - Support for two PDC channels with connection to receiver and transmitter
- Debug Communication Channel Support
  - Offers visibility of an interrupt trigger from COMMRX and COMMTX signals from the ARM Processor's ICE Interface

28.3 Block Diagram

Figure 28-1. Debug Unit Functional Block Diagram

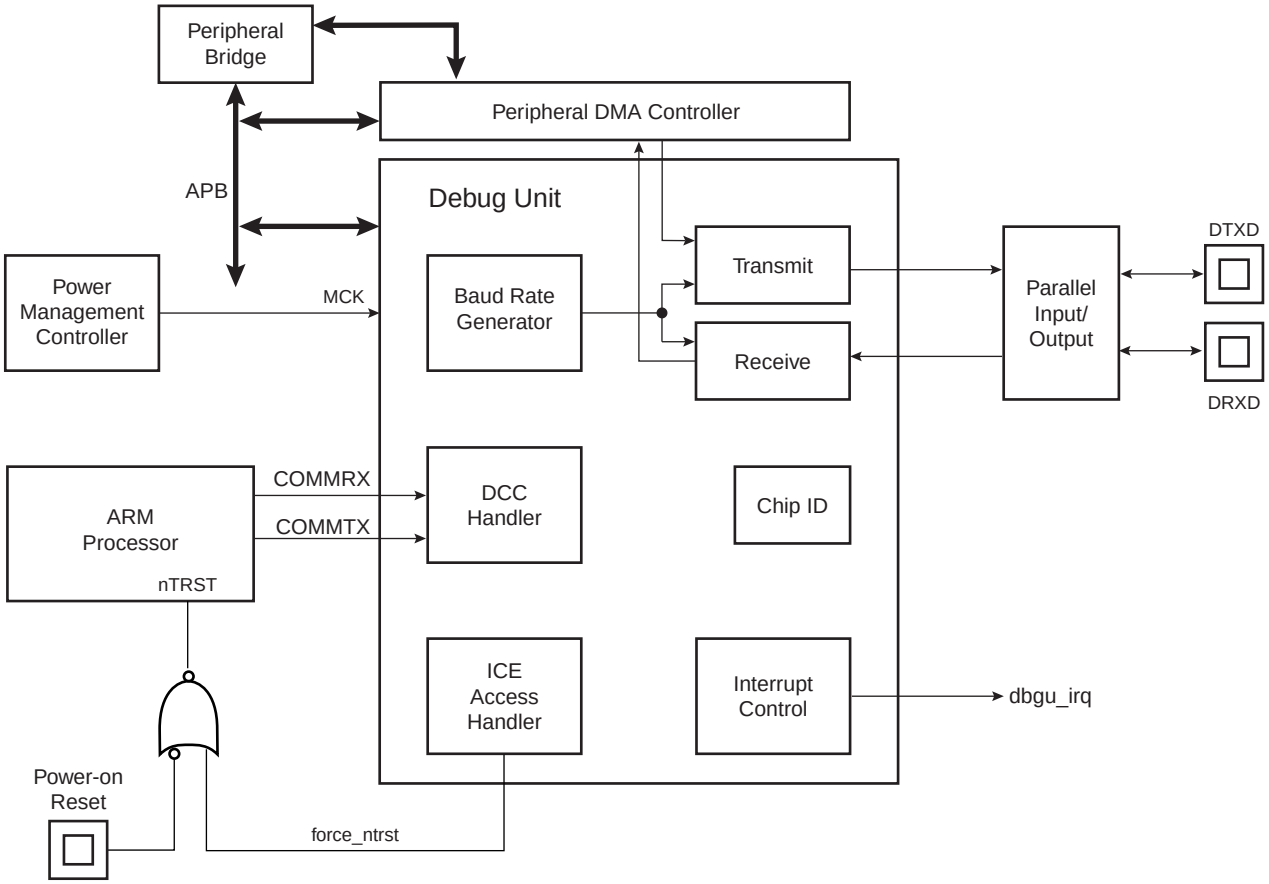

Pin Name	Description	Type
DRXD	Debug Receive Data	Input
DTXD	Debug Transmit Data	Output

Figure 28-2. Debug Unit Application Example

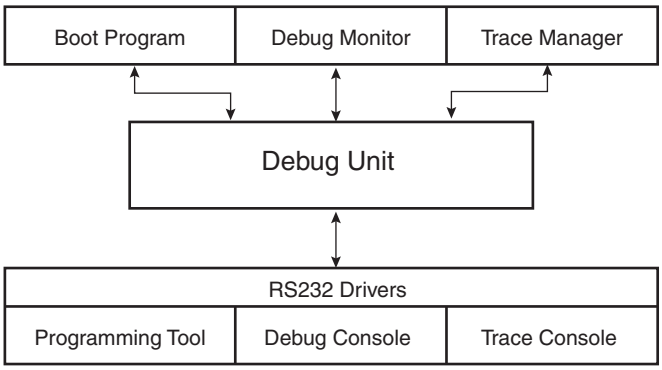

28.4 Product Dependencies

28.4.1 I/O Lines

Depending on product integration, the Debug Unit pins may be multiplexed with PIO lines. In this case, the programmer must first configure the corresponding PIO Controller to enable I/O lines operations of the Debug Unit.

Table 28-1. I/O Lines

Instance	Signal	I/O Line	Peripheral
DBGU	DRXD	PB12	A
DBGU	DTXD	PB13	A

28.4.2 Power Management

Depending on product integration, the Debug Unit clock may be controllable through the Power Management Controller. In this case, the programmer must first configure the PMC to enable the Debug Unit clock. Usually, the peripheral identifier used for this purpose is 1.

28.4.3 Interrupt Source

Depending on product integration, the Debug Unit interrupt line is connected to one of the interrupt sources of the Advanced Interrupt Controller. Interrupt handling requires programming of the AIC before configuring the Debug Unit. Usually, the Debug Unit interrupt line connects to the interrupt source 1 of the AIC, which may be shared with the real-time clock, the system timer interrupt lines and other system peripheral interrupts, as shown in Figure 28-1. This sharing requires the programmer to determine the source of the interrupt when the source 1 is triggered.

28.5 UART Operations

The Debug Unit operates as a UART, (asynchronous mode only) and supports only 8-bit character handling (with parity). It has no clock pin.

The Debug Unit's UART is made up of a receiver and a transmitter that operate independently, and a common baud rate generator. Receiver timeout and transmitter time guard are not implemented. However, all the implemented features are compatible with those of a standard USART.

28.5.1 Baud Rate Generator

The baud rate generator provides the bit period clock named baud rate clock to both the receiver and the transmitter.

The baud rate clock is the master clock divided by 16 times the value (CD) written in DBGU_BRGR (Baud Rate Generator Register). If DBGU_BRGR is set to 0, the baud rate clock is disabled and the Debug Unit's UART remains inactive. The maximum allowable baud rate is Master Clock divided by 16. The minimum allowable baud rate is Master Clock divided by (16 x 65536).

$$\text{Baud Rate} = \frac{\text{MCK}}{16 \times \text{CD}}$$

Figure 28-3. Baud Rate Generator

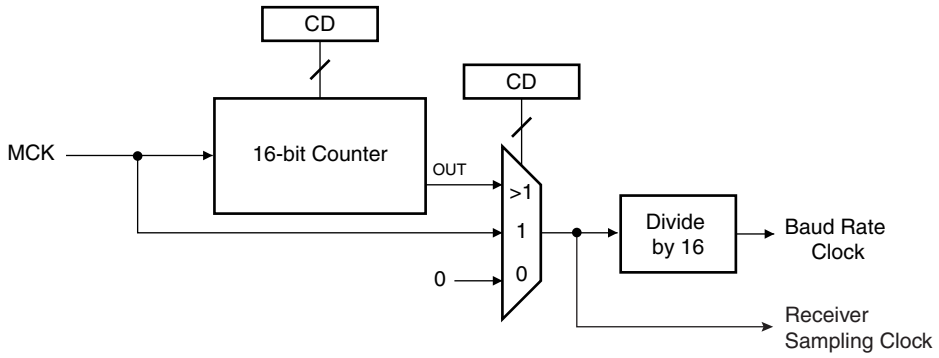

28.5.2 Receiver

28.5.2.1 Receiver Reset, Enable and Disable

After device reset, the Debug Unit receiver is disabled and must be enabled before being used. The receiver can be enabled by writing the control register DBGU_CR with the bit RXEN at 1. At this command, the receiver starts looking for a start bit.

The programmer can disable the receiver by writing DBGU_CR with the bit RXDIS at 1. If the receiver is waiting for a start bit, it is immediately stopped. However, if the receiver has already detected a start bit and is receiving the data, it waits for the stop bit before actually stopping its operation.

The programmer can also put the receiver in its reset state by writing DBGU_CR with the bit RSTRX at 1. In doing so, the receiver immediately stops its current operations and is disabled, whatever its current state. If RSTRX is applied when data is being processed, this data is lost.

28.5.2.2 Start Detection and Data Sampling

The Debug Unit only supports asynchronous operations, and this affects only its receiver. The Debug Unit receiver detects the start of a received character by sampling the DRXD signal until it detects a valid start bit. A low level (space) on DRXD is interpreted as a valid start bit if it is detected for more than 7 cycles of the sampling clock, which is 16 times the baud rate. Hence, a space that is longer than 7/16 of the bit period is detected as a valid start bit. A space which is 7/16 of a bit period or shorter is ignored and the receiver continues to wait for a valid start bit.

When a valid start bit has been detected, the receiver samples the DRXD at the theoretical midpoint of each bit. It is assumed that each bit lasts 16 cycles of the sampling clock (1-bit period) so the bit sampling point is eight cycles (0.5-bit period) after the start of the bit. The first sampling point is therefore 24 cycles (1.5-bit periods) after the falling edge of the start bit was detected.

Each subsequent bit is sampled 16 cycles (1-bit period) after the previous one.

Figure 28-4. Start Bit Detection

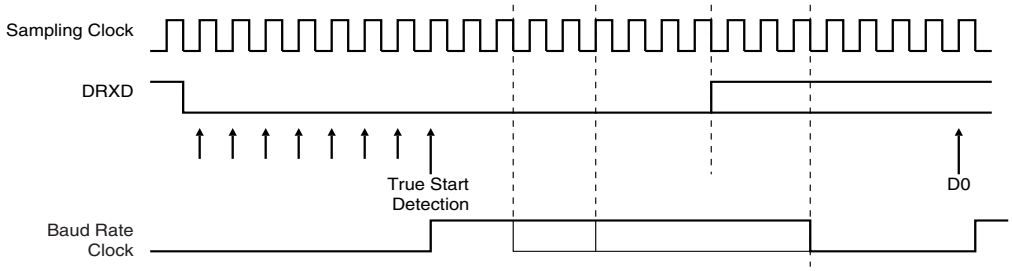

Figure 28-5. Character Reception

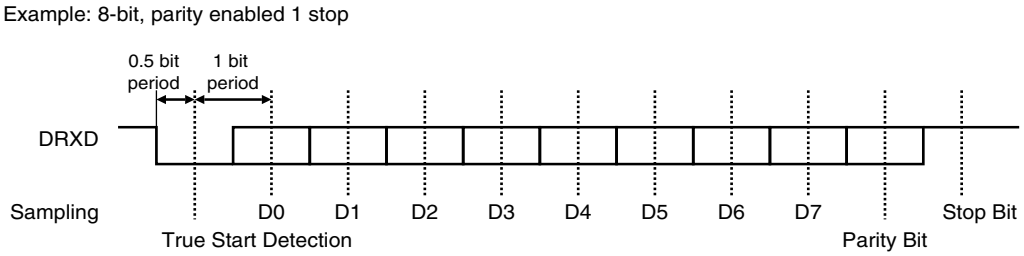

28.5.2.3 Receiver Ready

When a complete character is received, it is transferred to the DBGU_RHR and the RXRDY status bit in DBGU_SR (Status Register) is set. The bit RXRDY is automatically cleared when the receive holding register DBGU_RHR is read.

Figure 28-6. Receiver Ready

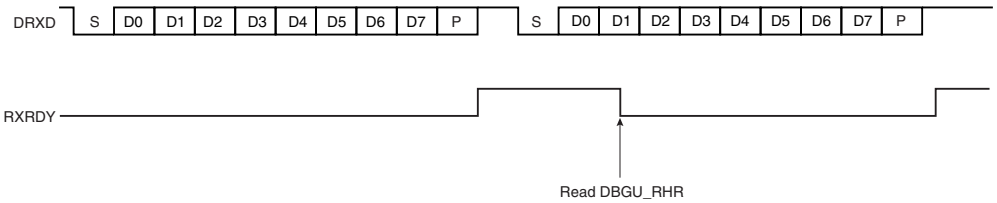

28.5.2.4 Receiver Overrun

If DBGU_RHR has not been read by the software (or the Peripheral Data Controller) since the last transfer, the RXRDY bit is still set and a new character is received, the OVRE status bit in DBGU_SR is set. OVRE is cleared when the software writes the control register DBGU_CR with the bit RSTSTA (Reset Status) at 1.

Figure 28-7. Receiver Overrun

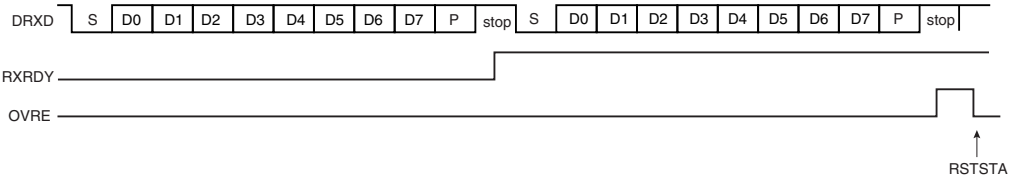

28.5.2.5 Parity Error

Each time a character is received, the receiver calculates the parity of the received data bits, in accordance with the field PAR in DBGU_MR. It then compares the result with the received parity bit. If different, the parity error bit PARE in DBGU_SR is set at the same time the RXRDY is set. The parity bit is cleared when the control register DBGU_CR is written with the bit RSTSTA (Reset Status) at 1. If a new character is received before the reset status command is written, the PARE bit remains at 1.

Figure 28-8. Parity Error

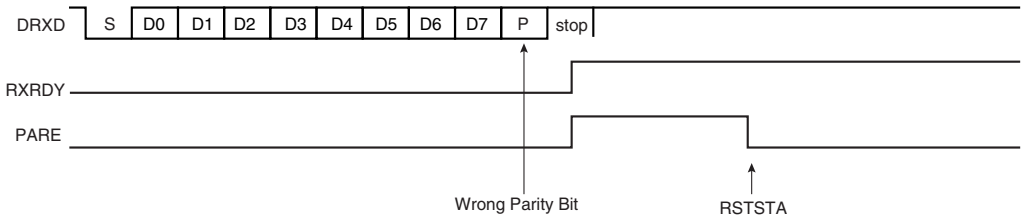

28.5.2.6 Receiver Framing Error

When a start bit is detected, it generates a character reception when all the data bits have been sampled. The stop bit is also sampled and when it is detected at 0, the FRAME (Framing Error) bit in DBGU_SR is set at the same time the RXRDY bit is set. The bit FRAME remains high until the control register DBGU_CR is written with the bit RSTSTA at 1.

Figure 28-9. Receiver Framing Error

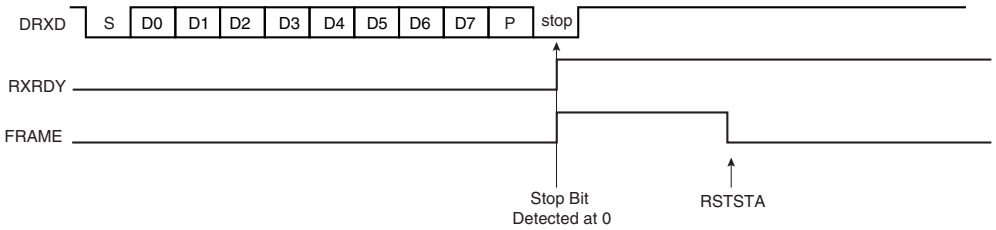

28.5.3 Transmitter

28.5.3.1 Transmitter Reset, Enable and Disable

After device reset, the Debug Unit transmitter is disabled and it must be enabled before being used. The transmitter is enabled by writing the control register DBGU_CR with the bit TXEN at 1. From this command, the transmitter waits for a character to be written in the Transmit Holding Register DBGU_THR before actually starting the transmission.

The programmer can disable the transmitter by writing DBGU_CR with the bit TXDIS at 1. If the transmitter is not operating, it is immediately stopped. However, if a character is being processed into the Shift Register and/or a character has been written in the Transmit Holding Register, the characters are completed before the transmitter is actually stopped.

The programmer can also put the transmitter in its reset state by writing the DBGU_CR with the bit RSTTX at 1. This immediately stops the transmitter, whether or not it is processing characters.

28.5.3.2 Transmit Format

The Debug Unit transmitter drives the pin DTXD at the baud rate clock speed. The line is driven depending on the format defined in the Mode Register and the data stored in the Shift Register. One start bit at level 0, then the 8 data bits, from the lowest to the highest bit, one optional parity bit and one stop bit at 1 are consecutively shifted out as shown on the following figure. The field PARE in the mode register DBGU_MR defines whether or not a parity bit is shifted out. When a parity bit is enabled, it can be selected between an odd parity, an even parity, or a fixed space or mark bit.

Figure 28-10. Character Transmission

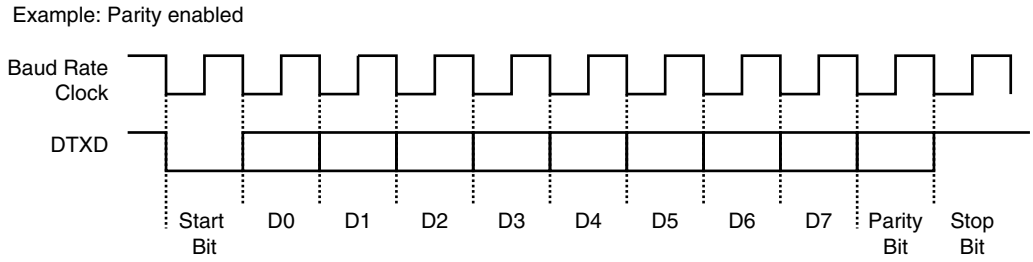

28.5.3.3 Transmitter Control

When the transmitter is enabled, the bit TXRDY (Transmitter Ready) is set in the status register DBGU_SR. The transmission starts when the programmer writes in the Transmit Holding Register DBGU_THR, and after the written character is transferred from DBGU_THR to the Shift Register. The bit TXRDY remains high until a second character is written in DBGU_THR. As soon as the first character is completed, the last character written in DBGU_THR is transferred into the shift register and TXRDY rises again, showing that the holding register is empty.

When both the Shift Register and the DBGU_THR are empty, i.e., all the characters written in DBGU_THR have been processed, the bit TXEMPTY rises after the last stop bit has been completed.

Figure 28-11. Transmitter Control

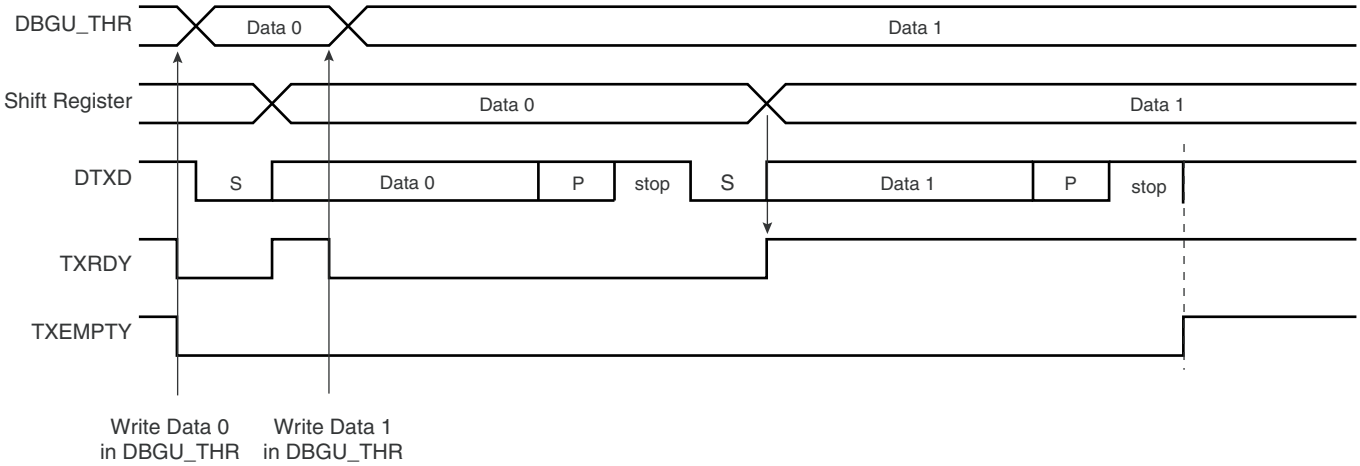

28.5.4 Peripheral Data Controller

Both the receiver and the transmitter of the Debug Unit's UART are generally connected to a Peripheral Data Controller (PDC) channel.

The peripheral data controller channels are programmed via registers that are mapped within the Debug Unit user interface from the offset 0x100. The status bits are reported in the Debug Unit status register DBGU_SR and can generate an interrupt.

The RXRDY bit triggers the PDC channel data transfer of the receiver. This results in a read of the data in DBGU_RHR. The TXRDY bit triggers the PDC channel data transfer of the transmitter. This results in a write of a data in DBGU_THR.

28.5.5 Test Modes

The Debug Unit supports three tests modes. These modes of operation are programmed by using the field CHMODE (Channel Mode) in the mode register DBGU_MR.

The Automatic Echo mode allows bit-by-bit retransmission. When a bit is received on the DRXD line, it is sent to the DTXD line. The transmitter operates normally, but has no effect on the DTXD line.

The Local Loopback mode allows the transmitted characters to be received. DTXD and DRXD pins are not used and the output of the transmitter is internally connected to the input of the receiver. The DRXD pin level has no effect and the DTXD line is held high, as in idle state.

The Remote Loopback mode directly connects the DRXD pin to the DTXD line. The transmitter and the receiver are disabled and have no effect. This mode allows a bit-by-bit retransmission.

Figure 28-12. Test Modes

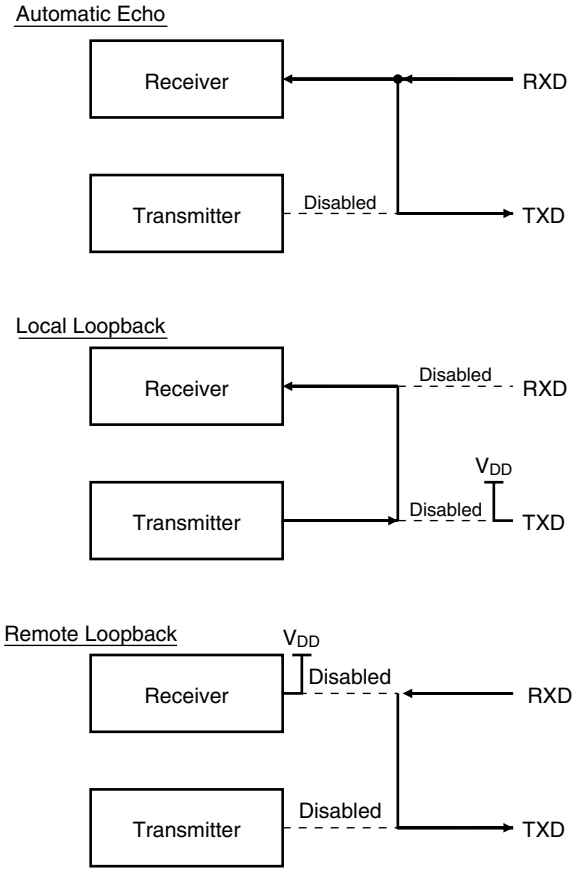

28.5.6 Debug Communication Channel Support

The Debug Unit handles the signals COMMRX and COMMTX that come from the Debug Communication Channel of the ARM Processor and are driven by the In-circuit Emulator.

The Debug Communication Channel contains two registers that are accessible through the ICE Breaker on the JTAG side and through the coprocessor 0 on the ARM Processor side.

As a reminder, the following instructions are used to read and write the Debug Communication Channel:

```
MRC    p14, 0, Rd, c1, c0, 0
```

Returns the debug communication data read register into Rd

```
MCR    p14, 0, Rd, c1, c0, 0
```

Writes the value in Rd to the debug communication data write register.

The bits COMMRX and COMMTX, which indicate, respectively, that the read register has been written by the debugger but not yet read by the processor, and that the write register has been written by the processor and not yet read by the debugger, are wired on the two highest bits of the status register DBGU_SR. These bits can generate an interrupt. This feature permits handling under interrupt a debug link between a debug monitor running on the target system and a debugger.

28.5.7 Chip Identifier

The Debug Unit features two chip identifier registers, DBGU_CIDR (Chip ID Register) and DBGU_EXID (Extension ID). Both registers contain a hard-wired value that is read-only. The first register contains the following fields:

- EXT - shows the use of the extension identifier register
- NVPTYP and NVPSIZ - identifies the type of embedded non-volatile memory and its size
- ARCH - identifies the set of embedded peripherals
- SRAMSIZ - indicates the size of the embedded SRAM
- EPROC - indicates the embedded ARM processor
- VERSION - gives the revision of the silicon

The second register is device-dependent and reads 0 if the bit EXT is 0.

28.5.8 ICE Access Prevention

The Debug Unit allows blockage of access to the system through the ARM processor's ICE interface. This feature is implemented via the register Force NTRST (DBGU_FNR), that allows assertion of the NTRST signal of the ICE Interface. Writing the bit FNTRST (Force NTRST) to 1 in this register prevents any activity on the TAP controller.

On standard devices, the bit FNTRST resets to 0 and thus does not prevent ICE access.

This feature is especially useful on custom ROM devices for customers who do not want their on-chip code to be visible.

28.6 Debug Unit (DBGU) User Interface

Table 28-2. Register Mapping

Offset	Register	Name	Access	Reset
0x0000	Control Register	DBGU_CR	Write-only	–
0x0004	Mode Register	DBGU_MR	Read-write	0x0
0x0008	Interrupt Enable Register	DBGU_IER	Write-only	–
0x000C	Interrupt Disable Register	DBGU_IDR	Write-only	–
0x0010	Interrupt Mask Register	DBGU_IMR	Read-only	0x0
0x0014	Status Register	DBGU_SR	Read-only	–
0x0018	Receive Holding Register	DBGU_RHR	Read-only	0x0
0x001C	Transmit Holding Register	DBGU_THR	Write-only	–
0x0020	Baud Rate Generator Register	DBGU_BRGR	Read-write	0x0
0x0024 - 0x003C	Reserved	–	–	–
0x0040	Chip ID Register	DBGU_CIDR	Read-only	–
0x0044	Chip ID Extension Register	DBGU_EXID	Read-only	–
0x0048	Force NTRST Register	DBGU_FNR	Read-write	0x0
0x0100 - 0x0124	PDC Area	–	–	–

28.6.1 Debug Unit Control Register

Name: DBGU_CR

Address: 0xFFFFEE00

Access Type: Write-only

31	30	29	28	27	26	25	24
–	–	–	–	–	–	–	–
23	22	21	20	19	18	17	16
–	–	–	–	–	–	–	–
15	14	13	12	11	10	9	8
–	–	–	–	–	–	–	RSTSTA
7	6	5	4	3	2	1	0
TXDIS	TXEN	RXDIS	RXEN	RSTTX	RSTRX	–	–

- **RSTRX: Reset Receiver**

0 = No effect.

1 = The receiver logic is reset and disabled. If a character is being received, the reception is aborted.

- **RSTTX: Reset Transmitter**

0 = No effect.

1 = The transmitter logic is reset and disabled. If a character is being transmitted, the transmission is aborted.

- **RXEN: Receiver Enable**

0 = No effect.

1 = The receiver is enabled if RXDIS is 0.

- **RXDIS: Receiver Disable**

0 = No effect.

1 = The receiver is disabled. If a character is being processed and RSTRX is not set, the character is completed before the receiver is stopped.

- **TXEN: Transmitter Enable**

0 = No effect.

1 = The transmitter is enabled if TXDIS is 0.

- **TXDIS: Transmitter Disable**

0 = No effect.

1 = The transmitter is disabled. If a character is being processed and a character has been written the DBGU_THR and RSTTX is not set, both characters are completed before the transmitter is stopped.

- **RSTSTA: Reset Status Bits**

0 = No effect.

1 = Resets the status bits PARE, FRAME and OVRE in the DBGU_SR.

28.6.2 Debug Unit Mode Register

Name: DBGU_MR

Address: 0xFFFFEE04

Access Type: Read-write

31	30	29	28	27	26	25	24
–	–	–	–	–	–	–	–

23	22	21	20	19	18	17	16
–	–	–	–	–	–	–	–

15	14	13	12	11	10	9	8
CHMODE		–	–	PAR			–

7	6	5	4	3	2	1	0
–	–	–	–	–	–	–	–

- **PAR: Parity Type**

PAR			Parity Type
0	0	0	Even parity
0	0	1	Odd parity
0	1	0	Space: parity forced to 0
0	1	1	Mark: parity forced to 1
1	x	x	No parity

- **CHMODE: Channel Mode**

CHMODE		Mode Description
0	0	Normal Mode
0	1	Automatic Echo
1	0	Local Loopback
1	1	Remote Loopback

28.6.3 Debug Unit Interrupt Enable Register

Name: DBGU_IER

Address: 0xFFFFEE08

Access Type: Write-only

31	30	29	28	27	26	25	24
COMMRX	COMMTX	–	–	–	–	–	–
23	22	21	20	19	18	17	16
–	–	–	–	–	–	–	–
15	14	13	12	11	10	9	8
–	–	–	RXBUFF	TXBUFE	–	TXEMPTY	–
7	6	5	4	3	2	1	0
PARE	FRAME	OVRE	ENDTX	ENDRX	–	TXRDY	RXRDY

- **RXRDY: Enable RXRDY Interrupt**
- **TXRDY: Enable TXRDY Interrupt**
- **ENDRX: Enable End of Receive Transfer Interrupt**
- **ENDTX: Enable End of Transmit Interrupt**
- **OVRE: Enable Overrun Error Interrupt**
- **FRAME: Enable Framing Error Interrupt**
- **PARE: Enable Parity Error Interrupt**
- **TXEMPTY: Enable TXEMPTY Interrupt**
- **TXBUFE: Enable Buffer Empty Interrupt**
- **RXBUFF: Enable Buffer Full Interrupt**
- **COMMTX: Enable COMMTX (from ARM) Interrupt**
- **COMMRX: Enable COMMRX (from ARM) Interrupt**

0 = No effect.

1 = Enables the corresponding interrupt.

28.6.4 Debug Unit Interrupt Disable Register

Name: DBGU_IDR

Address: 0xFFFFEE0C

Access Type: Write-only

31	30	29	28	27	26	25	24
COMMRX	COMMTX	–	–	–	–	–	–
23	22	21	20	19	18	17	16
–	–	–	–	–	–	–	–
15	14	13	12	11	10	9	8
–	–	–	RXBUFF	TXBUFE	–	TXEMPTY	–
7	6	5	4	3	2	1	0
PARE	FRAME	OVRE	ENDTX	ENDRX	–	TXRDY	RXRDY

- **RXRDY: Disable RXRDY Interrupt**
- **TXRDY: Disable TXRDY Interrupt**
- **ENDRX: Disable End of Receive Transfer Interrupt**
- **ENDTX: Disable End of Transmit Interrupt**
- **OVRE: Disable Overrun Error Interrupt**
- **FRAME: Disable Framing Error Interrupt**
- **PARE: Disable Parity Error Interrupt**
- **TXEMPTY: Disable TXEMPTY Interrupt**
- **TXBUFE: Disable Buffer Empty Interrupt**
- **RXBUFF: Disable Buffer Full Interrupt**
- **COMMTX: Disable COMMTX (from ARM) Interrupt**
- **COMMRX: Disable COMMRX (from ARM) Interrupt**

0 = No effect.

1 = Disables the corresponding interrupt.

28.6.5 Debug Unit Interrupt Mask Register

Name: DBGU_IMR

Address: 0xFFFFEE10

Access Type: Read-only

31	30	29	28	27	26	25	24
COMMRX	COMMTX	–	–	–	–	–	–
23	22	21	20	19	18	17	16
–	–	–	–	–	–	–	–
15	14	13	12	11	10	9	8
–	–	–	RXBUFF	TXBUFE	–	TXEMPTY	–
7	6	5	4	3	2	1	0
PARE	FRAME	OVRE	ENDTX	ENDRX	–	TXRDY	RXRDY

- **RXRDY: Mask RXRDY Interrupt**
- **TXRDY: Disable TXRDY Interrupt**
- **ENDRX: Mask End of Receive Transfer Interrupt**
- **ENDTX: Mask End of Transmit Interrupt**
- **OVRE: Mask Overrun Error Interrupt**
- **FRAME: Mask Framing Error Interrupt**
- **PARE: Mask Parity Error Interrupt**
- **TXEMPTY: Mask TXEMPTY Interrupt**
- **TXBUFE: Mask TXBUFE Interrupt**
- **RXBUFF: Mask RXBUFF Interrupt**
- **COMMTX: Mask COMMTX Interrupt**
- **COMMRX: Mask COMMRX Interrupt**

0 = The corresponding interrupt is disabled.

1 = The corresponding interrupt is enabled.

28.6.6 Debug Unit Status Register

Name: DBGU_SR

Address: 0xFFFFEE14

Access Type: Read-only

31	30	29	28	27	26	25	24
COMMRX	COMMTX	–	–	–	–	–	–
23	22	21	20	19	18	17	16
–	–	–	–	–	–	–	–
15	14	13	12	11	10	9	8
–	–	–	RXBUFF	TXBUFE	–	TXEMPTY	–
7	6	5	4	3	2	1	0
PARE	FRAME	OVRE	ENDTX	ENDRX	–	TXRDY	RXRDY

- **RXRDY: Receiver Ready**

0 = No character has been received since the last read of the DBGU_RHR or the receiver is disabled.

1 = At least one complete character has been received, transferred to DBGU_RHR and not yet read.

- **TXRDY: Transmitter Ready**

0 = A character has been written to DBGU_THR and not yet transferred to the Shift Register, or the transmitter is disabled.

1 = There is no character written to DBGU_THR not yet transferred to the Shift Register.

- **ENDRX: End of Receiver Transfer**

0 = The End of Transfer signal from the receiver Peripheral Data Controller channel is inactive.

1 = The End of Transfer signal from the receiver Peripheral Data Controller channel is active.

- **ENDTX: End of Transmitter Transfer**

0 = The End of Transfer signal from the transmitter Peripheral Data Controller channel is inactive.

1 = The End of Transfer signal from the transmitter Peripheral Data Controller channel is active.

- **OVRE: Overrun Error**

0 = No overrun error has occurred since the last RSTSTA.

1 = At least one overrun error has occurred since the last RSTSTA.

- **FRAME: Framing Error**

0 = No framing error has occurred since the last RSTSTA.

1 = At least one framing error has occurred since the last RSTSTA.

- **PARE: Parity Error**

0 = No parity error has occurred since the last RSTSTA.

1 = At least one parity error has occurred since the last RSTSTA.

- **TXEMPTY: Transmitter Empty**

0 = There are characters in DBGU_THR, or characters being processed by the transmitter, or the transmitter is disabled.

1 = There are no characters in DBGU_THR and there are no characters being processed by the transmitter.

- **TXBUFE: Transmission Buffer Empty**

0 = The buffer empty signal from the transmitter PDC channel is inactive.

1 = The buffer empty signal from the transmitter PDC channel is active.

- **RXBUFF: Receive Buffer Full**

0 = The buffer full signal from the receiver PDC channel is inactive.

1 = The buffer full signal from the receiver PDC channel is active.

- **COMMTX: Debug Communication Channel Write Status**

0 = COMMTX from the ARM processor is inactive.

1 = COMMTX from the ARM processor is active.

- **COMMRX: Debug Communication Channel Read Status**

0 = COMMRX from the ARM processor is inactive.

1 = COMMRX from the ARM processor is active.

28.6.7 Debug Unit Receiver Holding Register

Name: DBGU_RHR

Address: 0xFFFFEE18

Access Type: Read-only

31	30	29	28	27	26	25	24
–	–	–	–	–	–	–	–
23	22	21	20	19	18	17	16
–	–	–	–	–	–	–	–
15	14	13	12	11	10	9	8
–	–	–	–	–	–	–	–
7	6	5	4	3	2	1	0
RXCHR							

- **RXCHR: Received Character**

Last received character if RXRDY is set.

28.6.8 Debug Unit Transmit Holding Register

Name: DBGU_THR

Address: 0xFFFFEE1C

Access Type: Write-only

31	30	29	28	27	26	25	24
–	–	–	–	–	–	–	–
23	22	21	20	19	18	17	16
–	–	–	–	–	–	–	–
15	14	13	12	11	10	9	8
–	–	–	–	–	–	–	–
7	6	5	4	3	2	1	0
TXCHR							

- **TXCHR: Character to be Transmitted**

Next character to be transmitted after the current character if TXRDY is not set.

28.6.9 Debug Unit Baud Rate Generator Register

Name: DBGU_BRGR

Address: 0xFFFFEE20

Access Type: Read-write

31	30	29	28	27	26	25	24
–	–	–	–	–	–	–	–
23	22	21	20	19	18	17	16
–	–	–	–	–	–	–	–
15	14	13	12	11	10	9	8
CD							
7	6	5	4	3	2	1	0
CD							

- **CD: Clock Divisor**

CD	Baud Rate Clock
0	Disabled
1	MCK
2 to 65535	MCK / (CD x 16)

28.6.10 Debug Unit Chip ID Register

Name: DBGU_CIDR

Address: 0xFFFFEE40

Access Type: Read-only

31	30	29	28	27	26	25	24
EXT	NVPTYP			ARCH			

23	22	21	20	19	18	17	16
ARCH				SRAMSIZ			

15	14	13	12	11	10	9	8
NVPSIZ2				NVPSIZ			

7	6	5	4	3	2	1	0
EPROC			VERSION				

- **VERSION: Version of the Device**

Values depend upon the version of the device.

- **EPROC: Embedded Processor**

EPROC			Processor
0	0	1	ARM946ES
0	1	0	ARM7TDMI
1	0	0	ARM920T
1	0	1	ARM926EJS

- **NVPSIZ: Nonvolatile Program Memory Size**

NVPSIZ				Size
0	0	0	0	None
0	0	0	1	8K bytes
0	0	1	0	16K bytes
0	0	1	1	32K bytes
0	1	0	0	Reserved
0	1	0	1	64K bytes
0	1	1	0	Reserved
0	1	1	1	128K bytes
1	0	0	0	Reserved
1	0	0	1	256K bytes
1	0	1	0	512K bytes
1	0	1	1	Reserved
1	1	0	0	1024K bytes
1	1	0	1	Reserved
1	1	1	0	2048K bytes
1	1	1	1	Reserved

- **NVPSIZ2 Second Nonvolatile Program Memory Size**

NVPSIZ2				Size
0	0	0	0	None
0	0	0	1	8K bytes
0	0	1	0	16K bytes
0	0	1	1	32K bytes
0	1	0	0	Reserved
0	1	0	1	64K bytes
0	1	1	0	Reserved
0	1	1	1	128K bytes
1	0	0	0	Reserved
1	0	0	1	256K bytes
1	0	1	0	512K bytes
1	0	1	1	Reserved
1	1	0	0	1024K bytes
1	1	0	1	Reserved
1	1	1	0	2048K bytes
1	1	1	1	Reserved

- **SRAMSIZ: Internal SRAM Size**

SRAMSIZ				Size
0	0	0	0	Reserved
0	0	0	1	1K bytes
0	0	1	0	2K bytes
0	0	1	1	6K bytes
0	1	0	0	112K bytes
0	1	0	1	4K bytes
0	1	1	0	80K bytes
0	1	1	1	160K bytes
1	0	0	0	8K bytes
1	0	0	1	16K bytes
1	0	1	0	32K bytes
1	0	1	1	64K bytes
1	1	0	0	128K bytes
1	1	0	1	256K bytes
1	1	1	0	96K bytes
1	1	1	1	512K bytes

- **ARCH: Architecture Identifier**

ARCH		
Hex	**Bin**	**Architecture**
0x19	0001 1001	AT91SAM9xx Series
0x29	0010 1001	AT91SAM9XExx Series
0x34	0011 0100	AT91x34 Series
0x37	0011 0111	CAP7 Series
0x39	0011 1001	CAP9 Series
0x3B	0011 1011	CAP11 Series
0x40	0100 0000	AT91x40 Series
0x42	0100 0010	AT91x42 Series
0x55	0101 0101	AT91x55 Series
0x60	0110 0000	AT91SAM7Axx Series
0x61	0110 0001	AT91SAM7AQxx Series
0x63	0110 0011	AT91x63 Series
0x70	0111 0000	AT91SAM7Sxx Series
0x71	0111 0001	AT91SAM7XCxx Series
0x72	0111 0010	AT91SAM7SExx Series
0x73	0111 0011	AT91SAM7Lxx Series
0x75	0111 0101	AT91SAM7Xxx Series
0x92	1001 0010	AT91x92 Series
0xF0	1111 0000	AT75Cxx Series

- **NVPTYP: Nonvolatile Program Memory Type**

NVPTYP			Memory
0	0	0	ROM
0	0	1	ROMless or on-chip Flash
1	0	0	SRAM emulating ROM
0	1	0	Embedded Flash Memory
0	1	1	ROM and Embedded Flash Memory NVPSIZ is ROM size NVPSIZ2 is Flash size

- **EXT: Extension Flag**

0 = Chip ID has a single register definition without extension

1 = An extended Chip ID exists.

28.6.11 Debug Unit Chip ID Extension Register

Name: DBGU_EXID

Address: 0xFFFFEE44

Access Type: Read-only

31	30	29	28	27	26	25	24
EXID							

23	22	21	20	19	18	17	16
EXID							

15	14	13	12	11	10	9	8
EXID							

7	6	5	4	3	2	1	0
EXID							

- **EXID: Chip ID Extension**

Reads 0 if the bit EXT in DBGU_CIDR is 0.

28.6.12 Debug Unit Force NTRST Register

Name: DBGU_FNR

Address: 0xFFFFEE48

Access Type: Read-write

31	30	29	28	27	26	25	24
–	–	–	–	–	–	–	–
23	22	21	20	19	18	17	16
–	–	–	–	–	–	–	–
15	14	13	12	11	10	9	8
–	–	–	–	–	–	–	–
7	6	5	4	3	2	1	0
–	–	–	–	–	–	–	FNTRST

- **FNTRST: Force NTRST**

0 = NTRST of the ARM processor's TAP controller is driven by the power_on_reset signal.

1 = NTRST of the ARM processor's TAP controller is held low.

29. Serial Peripheral Interface (SPI)

29.1 Description

The Serial Peripheral Interface (SPI) circuit is a synchronous serial data link that provides communication with external devices in Master or Slave Mode. It also enables communication between processors if an external processor is connected to the system.

The Serial Peripheral Interface is essentially a shift register that serially transmits data bits to other SPIs. During a data transfer, one SPI system acts as the “master”' which controls the data flow, while the other devices act as “slaves'' which have data shifted into and out by the master. Different CPUs can take turn being masters (Multiple Master Protocol opposite to Single Master Protocol where one CPU is always the master while all of the others are always slaves) and one master may simultaneously shift data into multiple slaves. However, only one slave may drive its output to write data back to the master at any given time.

A slave device is selected when the master asserts its NSS signal. If multiple slave devices exist, the master generates a separate slave select signal for each slave (NPCS).

The SPI system consists of two data lines and two control lines:

- Master Out Slave In (MOSI): This data line supplies the output data from the master shifted into the input(s) of the slave(s).
- Master In Slave Out (MISO): This data line supplies the output data from a slave to the input of the master. There may be no more than one slave transmitting data during any particular transfer.
- Serial Clock (SPCK): This control line is driven by the master and regulates the flow of the data bits. The master may transmit data at a variety of baud rates; the SPCK line cycles once for each bit that is transmitted.
- Slave Select (NSS): This control line allows slaves to be turned on and off by hardware.

29.2 Embedded Characteristics

- Supports communication with serial external devices
  - Four chip selects with external decoder support allow communication with up to 15 peripherals
  - Serial memories, such as DataFlash and 3-wire EEPROMs
  - Serial peripherals, such as ADCs, DACs, LCD Controllers, CAN Controllers and Sensors
  - External co-processors
- Master or slave serial peripheral bus interface
  - 8- to 16-bit programmable data length per chip select
  - Programmable phase and polarity per chip select
  - Programmable transfer delays between consecutive transfers and between clock and data per chip select
  - Programmable delay between consecutive transfers
  - Selectable mode fault detection
- Very fast transfers supported
  - Transfers with baud rates up to MCK
  - The chip select line may be left active to speed up transfers on the same device

29.3 Block Diagram

Figure 29-1. Block Diagram

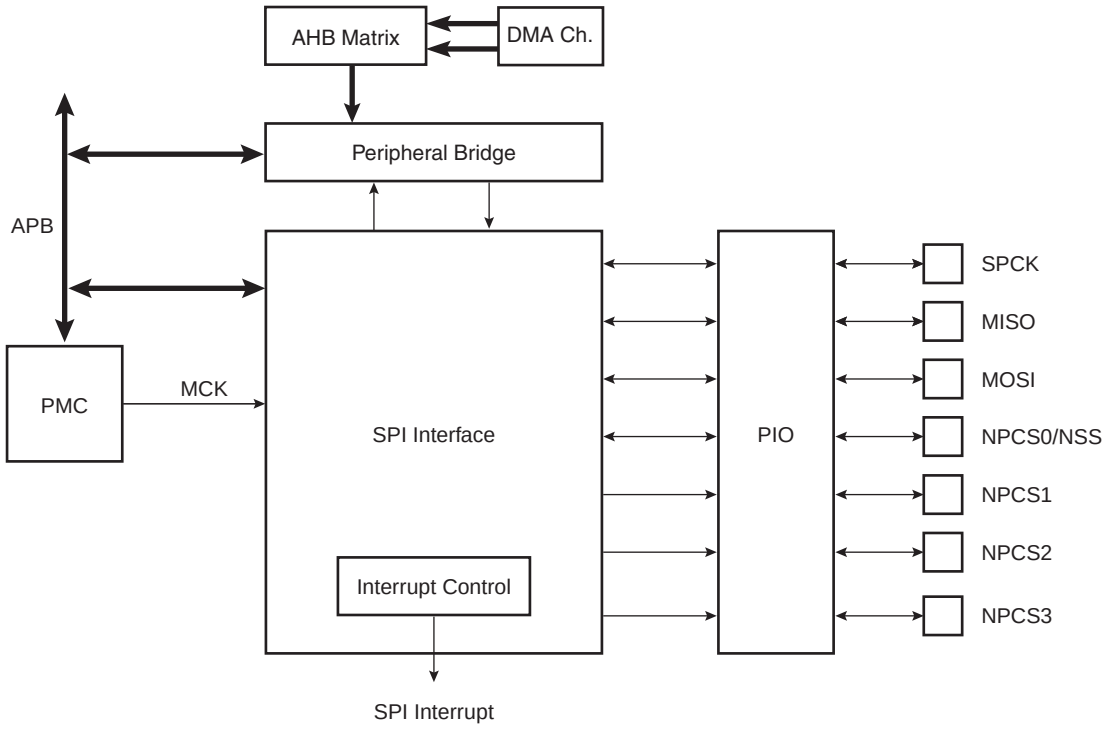

29.4 Application Block Diagram

Figure 29-2. Application Block Diagram: Single Master/Multiple Slave Implementation

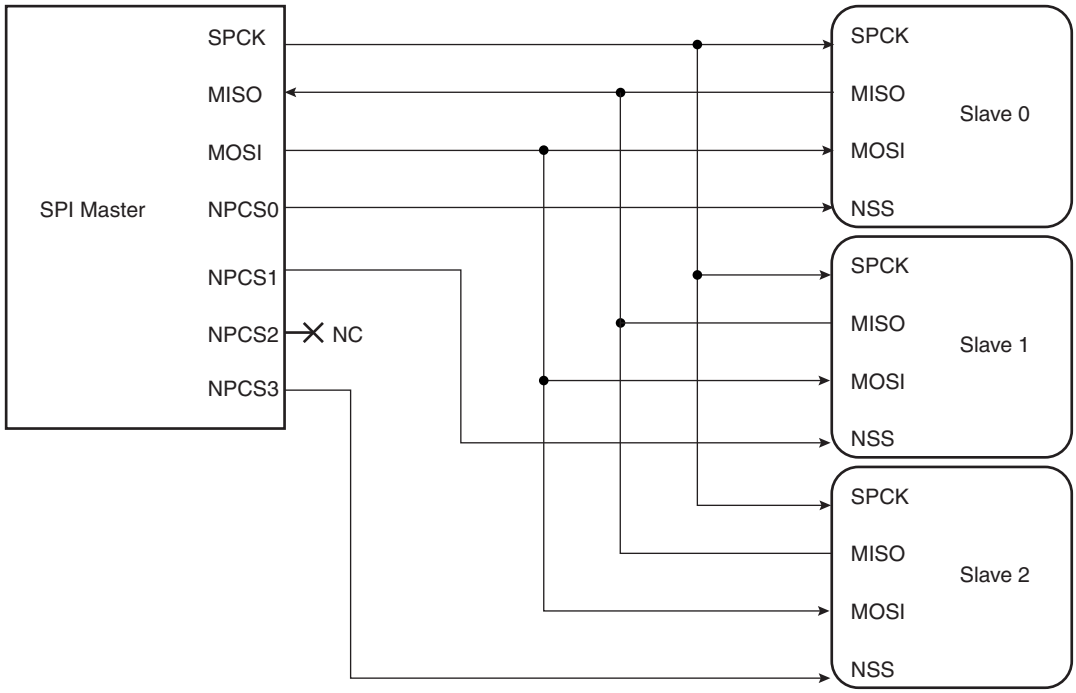

29.5 Signal Description

Signal Description

Pin Name	Pin Description	Type	
		Master	Slave
MISO	Master In Slave Out	Input	Output
MOSI	Master Out Slave In	Output	Input
SPCK	Serial Clock	Output	Input
NPCS1-NPCS3	Peripheral Chip Selects	Output	Unused
NPCS0/NSS	Peripheral Chip Select/Slave Select	Output	Input

29.6 Product Dependencies

29.6.1 I/O Lines

The pins used for interfacing the compliant external devices may be multiplexed with PIO lines. The programmer must first program the PIO controllers to assign the SPI pins to their peripheral functions.

Table 29-1. I/O Lines

Instance	Signal	I/O Line	Peripheral
SPI0	SPI0_MISO	PB0	A
SPI0	SPI0_MOSI	PB1	A
SPI0	SPI0_NPCS0	PB3	A
SPI0	SPI0_NPCS1	PB18	B
SPI0	SPI0_NPCS1	PD24	A
SPI0	SPI0_NPCS2	PB19	B
SPI0	SPI0_NPCS2	PD25	A
SPI0	SPI0_NPCS3	PD27	B
SPI0	SPI0_SPCK	PB2	A
SPI1	SPI1_MISO	PB14	A
SPI1	SPI1_MOSI	PB15	A
SPI1	SPI1_NPCS0	PB17	A
SPI1	SPI1_NPCS1	PD28	B
SPI1	SPI1_NPCS2	PD18	A
SPI1	SPI1_NPCS3	PD19	A
SPI1	SPI1_SPCK	PB16	A

29.6.2 Power Management

The SPI may be clocked through the Power Management Controller (PMC), thus the programmer must first configure the PMC to enable the SPI clock.

29.6.3 Interrupt

The SPI interface has an interrupt line connected to the Advanced Interrupt Controller (AIC).Handling the SPI interrupt requires programming the AIC before configuring the SPI.

Table 29-2. Peripheral IDs

Instance	ID
SPI0	14
SPI1	15

29.6.4 Peripheral DMA Controller (PDMA) Direct Memory Access Controller (DMAC)

The SPI interface can be used in conjunction with the PDMA DMAC in order to reduce processor overhead. For a full description of the PDMA DMAC, refer to the corresponding section in the full datasheet.

29.7 Functional Description

29.7.1 Modes of Operation

The SPI operates in Master Mode or in Slave Mode.

Operation in Master Mode is programmed by writing at 1 the MSTR bit in the Mode Register. The pins NPCS0 to NPCS3 are all configured as outputs, the SPCK pin is driven, the MISO line is wired on the receiver input and the MOSI line driven as an output by the transmitter.

If the MSTR bit is written at 0, the SPI operates in Slave Mode. The MISO line is driven by the transmitter output, the MOSI line is wired on the receiver input, the SPCK pin is driven by the transmitter to synchronize the receiver. The NPCS0 pin becomes an input, and is used as a Slave Select signal (NSS). The pins NPCS1 to NPCS3 are not driven and can be used for other purposes.

The data transfers are identically programmable for both modes of operations. The baud rate generator is activated only in Master Mode.

29.7.2 Data Transfer

Four combinations of polarity and phase are available for data transfers. The clock polarity is programmed with the CPOL bit in the Chip Select Register. The clock phase is programmed with the NCPHA bit. These two parameters determine the edges of the clock signal on which data is driven and sampled. Each of the two parameters has two possible states, resulting in four possible combinations that are incompatible with one another. Thus, a master/slave pair must use the same parameter pair values to communicate. If multiple slaves are used and fixed in different configurations, the master must reconfigure itself each time it needs to communicate with a different slave.

Table 29-3 shows the four modes and corresponding parameter settings.

Table 29-3. SPI Bus Protocol Mode

SPI Mode	CPOL	NCPHA	Shift SPCK Edge	Capture SPCK Edge	SPCK Inactive Level
0	0	1	Falling	Rising	Low
1	0	0	Rising	Falling	Low
2	1	1	Rising	Falling	High
3	1	0	Falling	Rising	High

Figure 29-3 and Figure 29-4 show examples of data transfers.

Figure 29-3. SPI Transfer Format (NCPHA = 1, 8 bits per transfer)

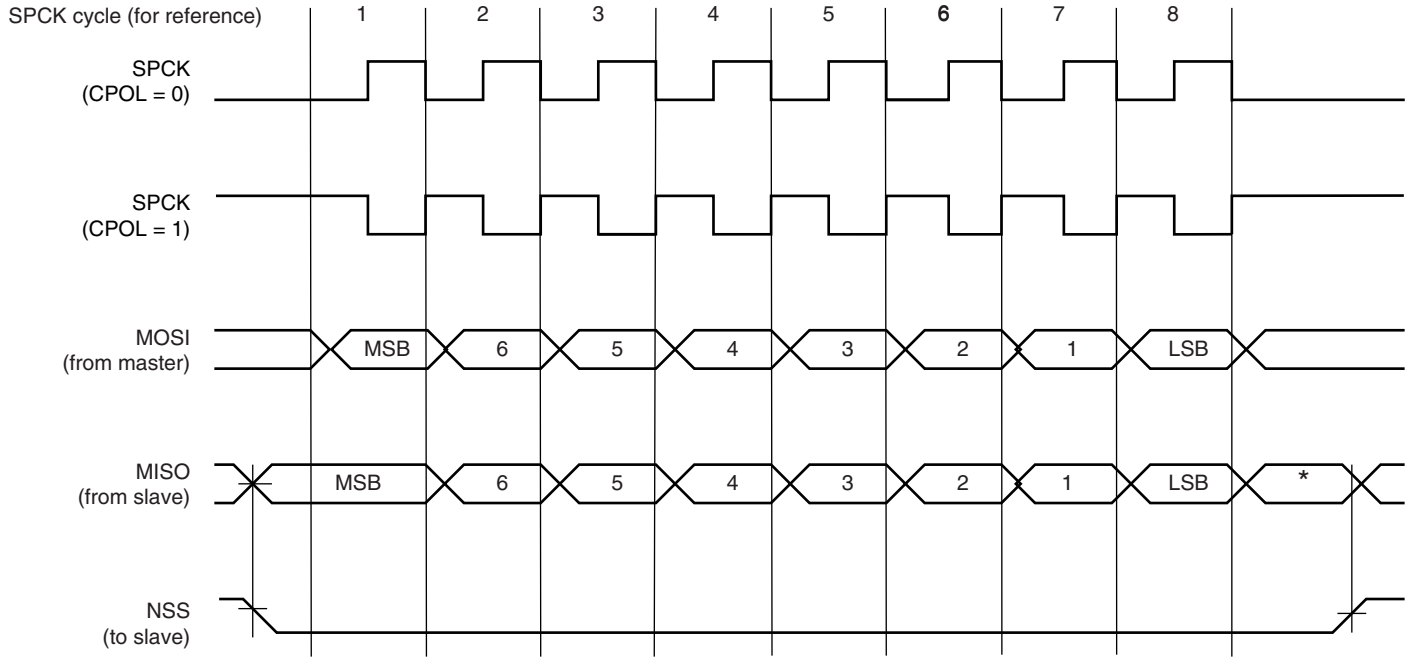

* Not defined, but normally MSB of previous character received.

Figure 29-4. SPI Transfer Format (NCPHA = 0, 8 bits per transfer)

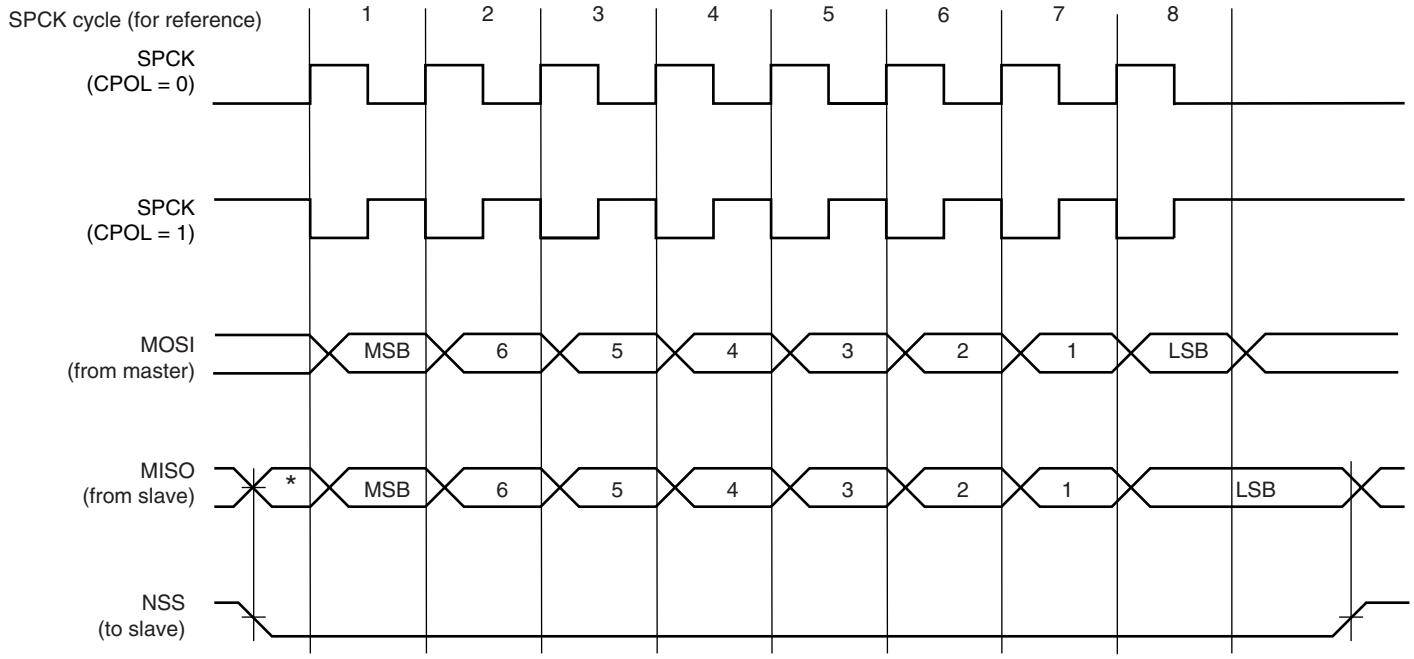

* Not defined but normally LSB of previous character transmitted.

29.7.3 Master Mode Operations

When configured in Master Mode, the SPI operates on the clock generated by the internal programmable baud rate generator. It fully controls the data transfers to and from the slave(s) connected to the SPI bus. The SPI drives the chip select line to the slave and the serial clock signal (SPCK).

The SPI features two holding registers, the Transmit Data Register and the Receive Data Register, and a single Shift Register. The holding registers maintain the data flow at a constant rate.

After enabling the SPI, a data transfer begins when the processor writes to the SPI_TDR (Transmit Data Register). The written data is immediately transferred in the Shift Register and transfer on the SPI bus starts. While the data in the Shift Register is shifted on the MOSI line, the MISO line is sampled and shifted in the Shift Register. Receiving data cannot occur without transmitting data. If receiving mode is not needed, for example when communicating with a slave receiver only (such as an LCD), the receive status flags in the status register can be discarded.

Before writing the TDR, the PCS field in the SPI_MR register must be set in order to select a slave.

After enabling the SPI, a data transfer begins when the processor writes to the SPI_TDR (Transmit Data Register). The written data is immediately transferred in the Shift Register and transfer on the SPI bus starts. While the data in the Shift Register is shifted on the MOSI line, the MISO line is sampled and shifted in the Shift Register. Transmission cannot occur without reception.

Before writing the TDR, the PCS field must be set in order to select a slave.

If new data is written in SPI_TDR during the transfer, it stays in it until the current transfer is completed. Then, the received data is transferred from the Shift Register to SPI_RDR, the data in SPI_TDR is loaded in the Shift Register and a new transfer starts.

The transfer of a data written in SPI_TDR in the Shift Register is indicated by the TDRE bit (Transmit Data Register Empty) in the Status Register (SPI_SR). When new data is written in SPI_TDR, this bit is cleared. The TDRE bit is used to trigger the Transmit DMA channel.

The end of transfer is indicated by the TXEMPTY flag in the SPI_SR register. If a transfer delay (DLYBCT) is greater than 0 for the last transfer, TXEMPTY is set after the completion of said delay. The master clock (MCK) can be switched off at this time.

The transfer of received data from the Shift Register in SPI_RDR is indicated by the RDRF bit (Receive Data Register Full) in the Status Register (SPI_SR). When the received data is read, the RDRF bit is cleared.

If the SPI_RDR (Receive Data Register) has not been read before new data is received, the Overrun Error bit (OVRES) in SPI_SR is set. As long as this flag is set, data is loaded in SPI_RDR. The user has to read the status register to clear the OVRES bit.

Figure 29-5, shows a block diagram of the SPI when operating in Master Mode. Figure 29-6 on page 419 shows a flow chart describing how transfers are handled.

29.7.3.1 Master Mode Block Diagram

Figure 29-5. Master Mode Block Diagram

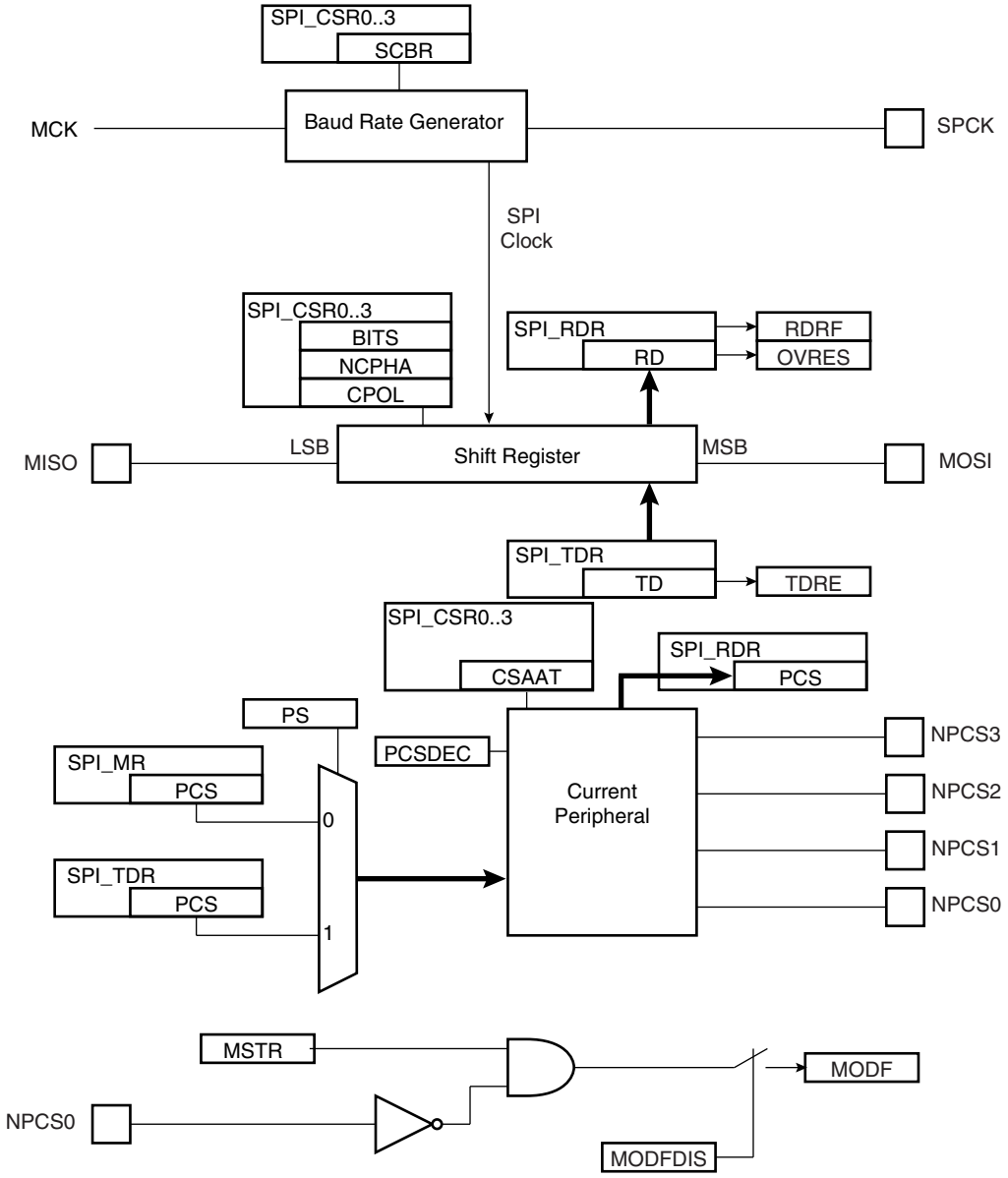

29.7.3.2 Master Mode Flow Diagram

Figure 29-6. Master Mode Flow Diagram

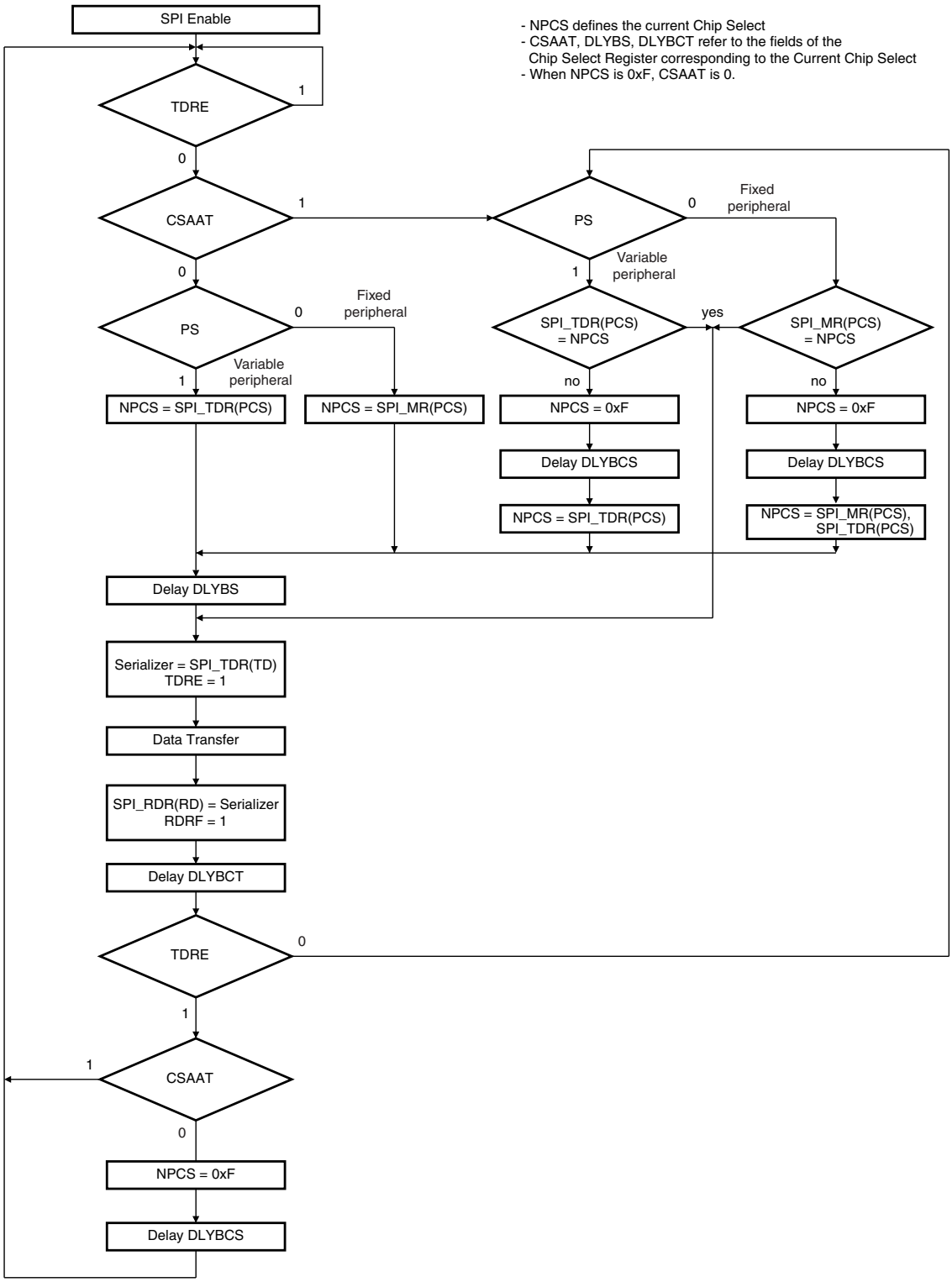

Figure 29-7 shows Transmit Data Register Empty (TDRE), Receive Data Register (RDRF) and Transmission Register Empty (TXEMPTY) status flags behavior within the SPI_SR (Status Register) during an 8-bit data transfer in fixed mode and no Peripheral Data Controller involved.

Figure 29-7. Status Register Flags Behavior

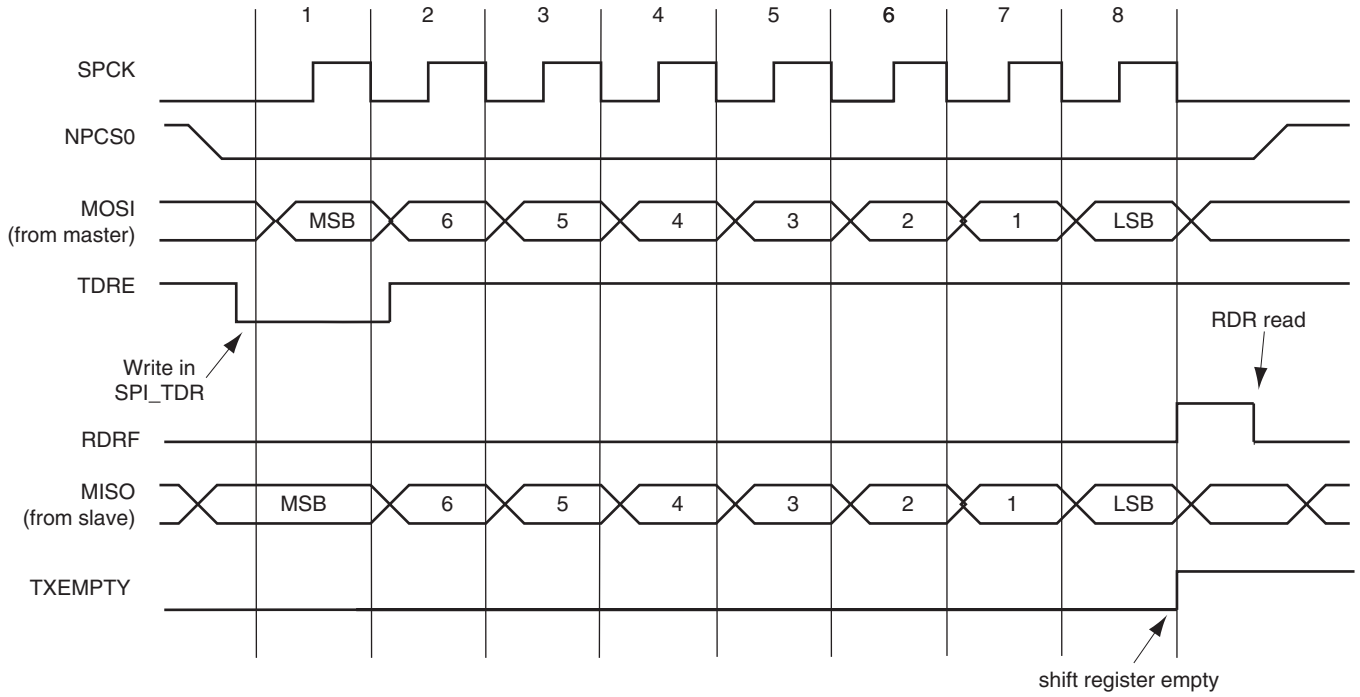

29.7.3.3 *Clock Generation*

The SPI Baud rate clock is generated by dividing the Master Clock (MCK), by a value between 1 and 255.

This allows a maximum operating baud rate at up to Master Clock and a minimum operating baud rate of MCK divided by 255.

Programming the SCBR field at 0 is forbidden. Triggering a transfer while SCBR is at 0 can lead to unpredictable results.

At reset, SCBR is 0 and the user has to program it at a valid value before performing the first transfer.

The divisor can be defined independently for each chip select, as it has to be programmed in the SCBR field of the Chip Select Registers. This allows the SPI to automatically adapt the baud rate for each interfaced peripheral without reprogramming.

29.7.3.4 *Transfer Delays*

Figure 29-8 shows a chip select transfer change and consecutive transfers on the same chip select. Three delays can be programmed to modify the transfer waveforms:

- The delay between chip selects, programmable only once for all the chip selects by writing the DLYBCS field in the Mode Register. Allows insertion of a delay between release of one chip select and before assertion of a new one.
- The delay before SPCK, independently programmable for each chip select by writing the field DLYBS. Allows the start of SPCK to be delayed after the chip select has been asserted.
- The delay between consecutive transfers, independently programmable for each chip select by writing the DLYBCT field. Allows insertion of a delay between two transfers occurring on the same chip select

These delays allow the SPI to be adapted to the interfaced peripherals and their speed and bus release time.

Figure 29-8. Programmable Delays

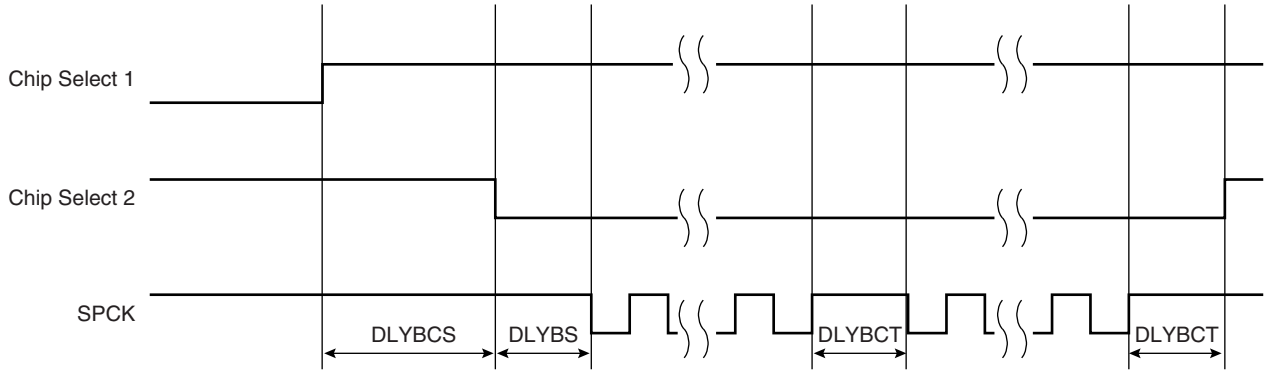

29.7.3.5 Peripheral Selection

The serial peripherals are selected through the assertion of the NPCS0 to NPCS3 signals. By default, all the NPCS signals are high before and after each transfer.

- Fixed Peripheral Select: SPI exchanges data with only one peripheral

Fixed Peripheral Select is activated by writing the PS bit to zero in SPI_MR (Mode Register). In this case, the current peripheral is defined by the PCS field in SPI_MR and the PCS field in the SPI_TDR has no effect.

- Variable Peripheral Select: Data can be exchanged with more than one peripheral without having to reprogram the NPCS field in the SPI_MR register.

Variable Peripheral Select is activated by setting PS bit to one. The PCS field in SPI_TDR is used to select the current peripheral. This means that the peripheral selection can be defined for each new data. The value to write in the SPI_TDR register as the following format.

[xxxxxxx(7-bit) + LASTXFER(1-bit)[(1)]+ xxxx(4-bit) + PCS (4-bit) + DATA (8 to 16-bit)] with PCS equals to the chip select to assert as defined in Section 29.8.4 (SPI Transmit Data Register) and LASTXFER bit at 0 or 1 depending on CSAAT bit.

CSAAT, LASTXFER and CSNAAT bit are discussed in the Section 29.7.3.9 “Peripheral Deselection with DMAC” .

Note: 1. Optional.

29.7.3.6 SPI Direct Access Memory Controller (DMAC)

In both fixed and variable mode the Direct Memory Access Controller (DMAC) can be used to reduce processor overhead.

The Fixed Peripheral Selection allows buffer transfers with a single peripheral. Using the DMAC is an optimal means, as the size of the data transfer between the memory and the SPI is either 8 bits or 16 bits. However, changing the peripheral selection requires the Mode Register to be reprogrammed.

The Variable Peripheral Selection allows buffer transfers with multiple peripherals without reprogramming the Mode Register. Data written in SPI_TDR is 32 bits wide and defines the real data to be transmitted and the peripheral it is destined to. Using the DMAC in this mode requires 32-bit wide buffers, with the data in the LSBs and the PCS and LASTXFER fields in the MSBs, however the SPI still controls the number of bits (8 to16) to be transferred through MISO and MOSI lines with the chip select configuration registers. This is not the optimal means in term of memory size for the buffers, but it provides a very effective means to exchange data with several peripherals without any intervention of the processor.

29.7.3.7 Peripheral Chip Select Decoding

The user can program the SPI to operate with up to 15 peripherals by decoding the four Chip Select lines, NPCS0 to NPCS3 with 1 of up to 16 decoder/demultiplexer. This can be enabled by writing the PCSDEC bit at 1 in the Mode Register (SPI_MR).

When operating without decoding, the SPI makes sure that in any case only one chip select line is activated, i.e., one NPCS line driven low at a time. If two bits are defined low in a PCS field, only the lowest numbered chip select is driven low.

When operating with decoding, the SPI directly outputs the value defined by the PCS field on NPCS lines of either the Mode Register or the Transmit Data Register (depending on PS).

As the SPI sets a default value of 0xF on the chip select lines (i.e. all chip select lines at 1) when not processing any transfer, only 15 peripherals can be decoded.

The SPI has only four Chip Select Registers, not 15. As a result, when decoding is activated, each chip select defines the characteristics of up to four peripherals. As an example, SPI_CRS0 defines the characteristics of the externally decoded peripherals 0 to 3, corresponding to the PCS values 0x0 to 0x3. Thus, the user has to make sure to connect compatible peripherals on the decoded chip select lines 0 to 3, 4 to 7, 8 to 11 and 12 to 14. Figure 29-9 below shows such an implementation.

If the CSAAT bit is used, with or without the DMAC, the Mode Fault detection for NPCS0 line must be disabled. This is not needed for all other chip select lines since Mode Fault Detection is only on NPCS0.

Figure 29-9. Chip Select Decoding Application Block Diagram: Single Master/Multiple Slave Implementation

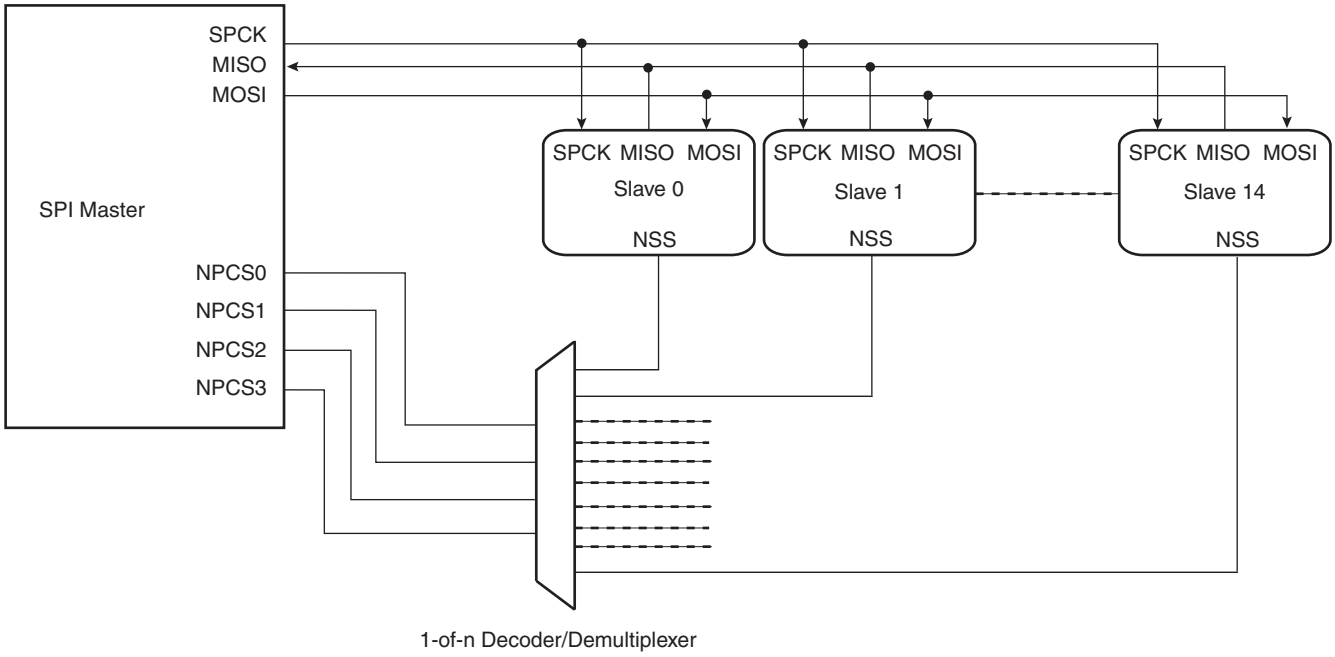

29.7.3.8 Peripheral Deselection without DMAC

During a transfer of more than one data on a Chip Select without the **DMAC**, the SPI_TDR is loaded by the processor, the flag TDRE rises as soon as the content of the SPI_TDR is transferred into the internal shift register. When this flag is detected high, the SPI_TDR can be reloaded. If this reload by the processor occurs before the end of the current transfer and if the next transfer is performed on the same chip select as the current transfer, the Chip Select is not de-asserted between the two transfers. But depending on the application software handling the SPI status register flags (by interrupt or polling method) or servicing other interrupts or other tasks, the processor may not reload the SPI_TDR in time to keep the chip select active (low). A null Delay Between Consecutive Transfer

(DLYBCT) value in the SPI_CSR register, will give even less time for the processor to reload the SPI_TDR. With some SPI slave peripherals, requiring the chip select line to remain active (low) during a full set of transfers might lead to communication errors.

To facilitate interfacing with such devices, the Chip Select Register [CSR0...CSR3] can be programmed with the CSAAT bit (Chip Select Active After Transfer) at 1. This allows the chip select lines to remain in their current state (low = active) until transfer to another chip select is required. Even if the SPI_TDR is not reloaded the chip select will remain active. To have the chip select line to raise at the end of the transfer the Last transfer Bit (LASTXFER) in the SPI_MR register must be set at 1 before writing the last data to transmit into the SPI_TDR.

29.7.3.9 Peripheral Deselection with DMAC

When the Direct Memory Access Controller is used, the chip select line will remain low during the whole transfer since the TDRE flag is managed by the DMAC itself. The reloading of the SPI_TDR by the DMAC is done as soon as TDRE flag is set to one. In this case the use of CSAAT bit might not be needed. However, it may happen that when other DMAC channels connected to other peripherals are in use as well, the SPI DMAC might be delayed by another (DMAC with a higher priority on the bus). Having DMAC buffers in slower memories like flash memory or SDRAM compared to fast internal SRAM, may lengthen the reload time of the SPI_TDR by the DMAC as well. This means that the SPI_TDR might not be reloaded in time to keep the chip select line low. In this case the chip select line may toggle between data transfer and according to some SPI Slave devices, the communication might get lost. The use of the CSAAT bit might be needed.

Figure 29-10 shows different peripheral deselction cases and the effect of the CSAAT bit.

Figure 29-10. Peripheral Deselection

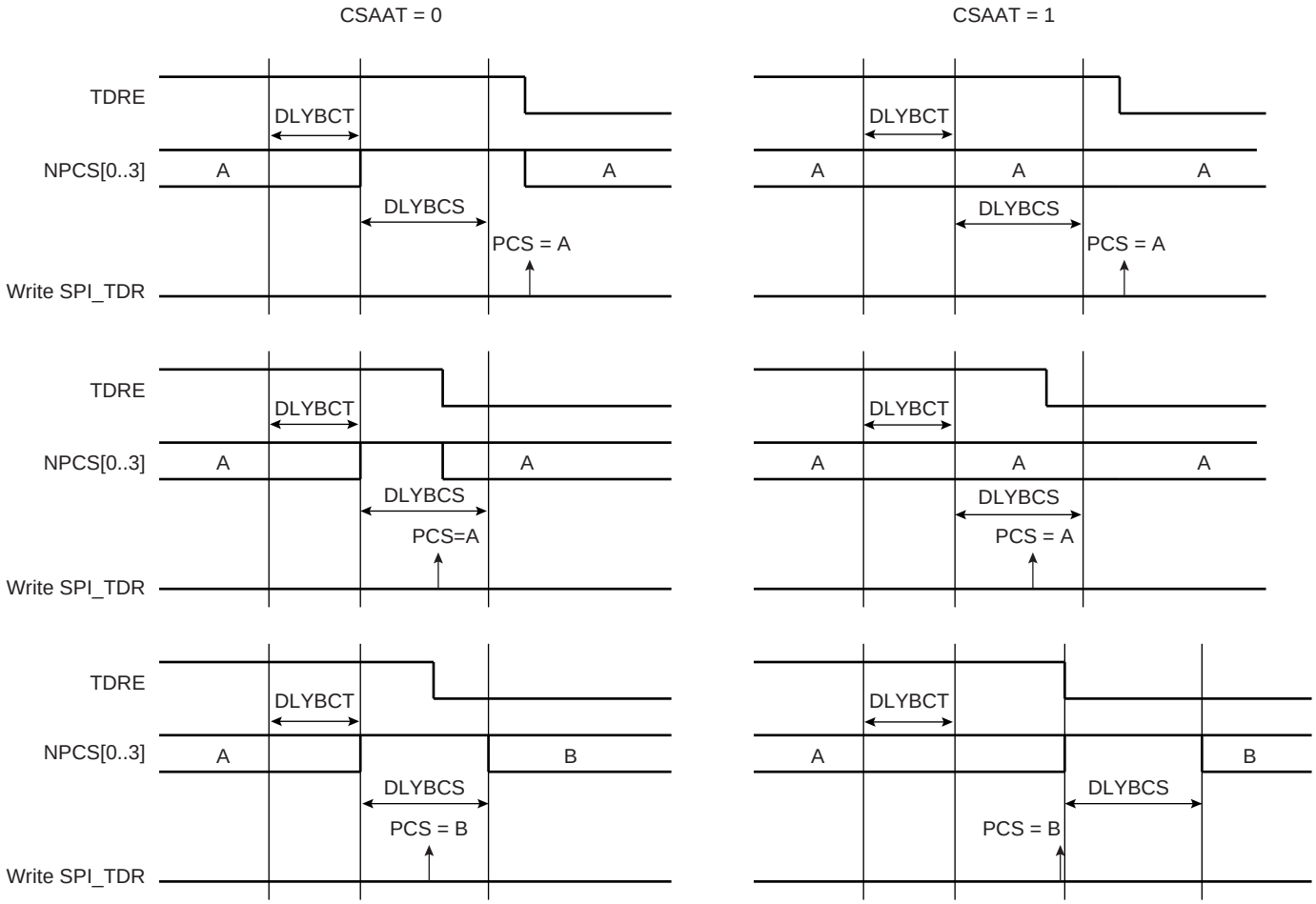

29.7.3.10 Mode Fault Detection

A mode fault is detected when the SPI is programmed in Master Mode and a low level is driven by an external master on the NPCS0/NSS signal. In this case, multi-master configuration, NPCS0, MOSI, MISO and SPCK pins must be configured in open drain (through the PIO controller). When a mode fault is detected, the MODF bit in the SPI_SR is set until the SPI_SR is read and the SPI is automatically disabled until re-enabled by writing the SPIEN bit in the SPI_CR (Control Register) at 1.

By default, the Mode Fault detection circuitry is enabled. The user can disable Mode Fault detection by setting the MODFDIS bit in the SPI Mode Register (SPI_MR).

29.7.4 SPI Slave Mode

When operating in Slave Mode, the SPI processes data bits on the clock provided on the SPI clock pin (SPCK).

The SPI waits for NSS to go active before receiving the serial clock from an external master. When NSS falls, the clock is validated on the serializer, which processes the number of bits defined by the BITS field of the Chip Select Register 0 (SPI_CSR0). These bits are processed following a phase and a polarity defined respectively by the NCPHA and CPOL bits of the SPI_CSR0. Note that BITS, CPOL and NCPHA of the other Chip Select Registers have no effect when the SPI is programmed in Slave Mode.

The bits are shifted out on the MISO line and sampled on the MOSI line.

(For more information on BITS field, see also, the (Note:) below the register table; Section 29.8.9 “SPI Chip Select Register” on page 437.)

When all the bits are processed, the received data is transferred in the Receive Data Register and the RDRF bit rises. If the SPI_RDR (Receive Data Register) has not been read before new data is received, the Overrun Error bit (OVRES) in SPI_SR is set. As long as this flag is set, data is loaded in SPI_RDR. The user has to read the status register to clear the OVRES bit.

When a transfer starts, the data shifted out is the data present in the Shift Register. If no data has been written in the Transmit Data Register (SPI_TDR), the last data received is transferred. If no data has been received since the last reset, all bits are transmitted low, as the Shift Register resets at 0.

When a first data is written in SPI_TDR, it is transferred immediately in the Shift Register and the TDRE bit rises. If new data is written, it remains in SPI_TDR until a transfer occurs, i.e. NSS falls and there is a valid clock on the SPCK pin. When the transfer occurs, the last data written in SPI_TDR is transferred in the Shift Register and the TDRE bit rises. This enables frequent updates of critical variables with single transfers.

Then, a new data is loaded in the Shift Register from the Transmit Data Register. In case no character is ready to be transmitted, i.e. no character has been written in SPI_TDR since the last load from SPI_TDR to the Shift Register, the Shift Register is not modified and the last received character is retransmitted.

Figure 29-11 shows a block diagram of the SPI when operating in Slave Mode.

Figure 29-11. Slave Mode Functional Bloc Diagram

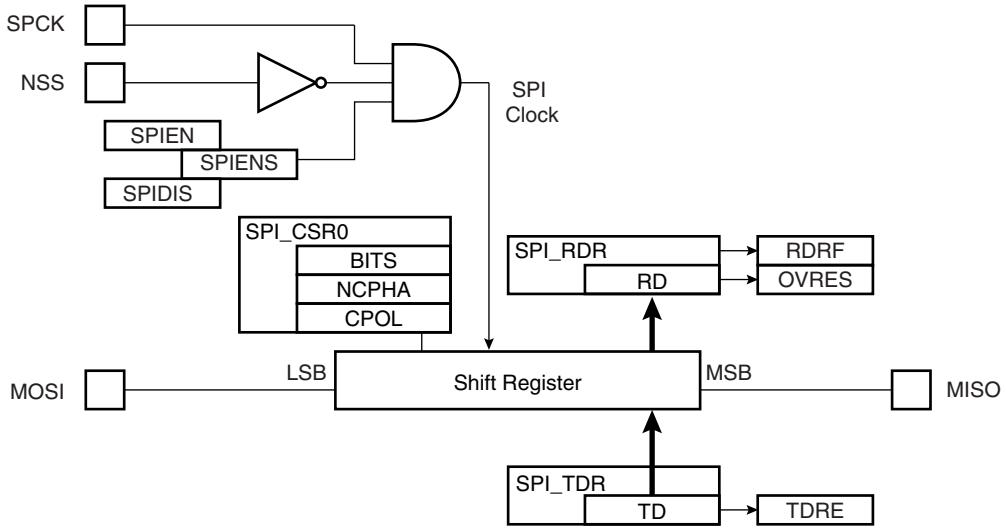

29.8 Serial Peripheral Interface (SPI) User Interface

Table 29-4. Register Mapping

Offset	Register	Name	Access	Reset
0x00	Control Register	SPI_CR	Write-only	---
0x04	Mode Register	SPI_MR	Read-write	0x0
0x08	Receive Data Register	SPI_RDR	Read-only	0x0
0x0C	Transmit Data Register	SPI_TDR	Write-only	---
0x10	Status Register	SPI_SR	Read-only	0x000000F0
0x14	Interrupt Enable Register	SPI_IER	Write-only	---
0x18	Interrupt Disable Register	SPI_IDR	Write-only	---
0x1C	Interrupt Mask Register	SPI_IMR	Read-only	0x0
0x20 - 0x2C	Reserved			
0x30	Chip Select Register 0	SPI_CSR0	Read-write	0x0
0x34	Chip Select Register 1	SPI_CSR1	Read-write	0x0
0x38	Chip Select Register 2	SPI_CSR2	Read-write	0x0
0x3C	Chip Select Register 3	SPI_CSR3	Read-write	0x0
0x004C - 0x00F8	Reserved	–	–	–

29.8.1 SPI Control Register

Name: SPI_CR

Addresses: 0xFFFA4000 (0), 0xFFFA8000 (1)

Access: Write-only

31	30	29	28	27	26	25	24
–	–	–	–	–	–	–	LASTXFER
23	22	21	20	19	18	17	16
–	–	–	–	–	–	–	–
15	14	13	12	11	10	9	8
–	–	–	–	–	–	–	–
7	6	5	4	3	2	1	0
SWRST	–	–	–	–	–	SPIDIS	SPIEN

- **SPIEN: SPI Enable**

0 = No effect.

1 = Enables the SPI to transfer and receive data.

- **SPIDIS: SPI Disable**

0 = No effect.

1 = Disables the SPI.

As soon as SPIDIS is set, SPI finishes its transfer.

All pins are set in input mode and no data is received or transmitted.

If a transfer is in progress, the transfer is finished before the SPI is disabled.

If both SPIEN and SPIDIS are equal to one when the control register is written, the SPI is disabled.

- **SWRST: SPI Software Reset**

0 = No effect.

1 = Reset the SPI. A software-triggered hardware reset of the SPI interface is performed.

The SPI is in slave mode after software reset.

DMA channels are not affected by software reset.

- **LASTXFER: Last Transfer**

0 = No effect.

1 = The current NPCS will be deasserted after the character written in TD has been transferred. When CSAAT is set, this allows to close the communication with the current serial peripheral by raising the corresponding NPCS line as soon as TD transfer has completed.

29.8.2 SPI Mode Register

Name: SPI_MR

Addresses: 0xFFFA4004 (0), 0xFFFA8004 (1)

Access: Read/Write

31	30	29	28	27	26	25	24
DLYBCS							

23	22	21	20	19	18	17	16
–	–	–	–	PCS			

15	14	13	12	11	10	9	8
–	–	–	–	–	–	–	–

7	6	5	4	3	2	1	0
LLB	–	WDRBT	MODFDIS	–	PCSDEC	PS	MSTR

- **MSTR: Master/Slave Mode**

0 = SPI is in Slave mode.

1 = SPI is in Master mode.

- **PS: Peripheral Select**

0 = Fixed Peripheral Select.

1 = Variable Peripheral Select.

- **PCSDEC: Chip Select Decode**

0 = The chip selects are directly connected to a peripheral device.

1 = The four chip select lines are connected to a 4- to 16-bit decoder.

When PCSDEC equals one, up to 15 Chip Select signals can be generated with the four lines using an external 4- to 16-bit decoder. The Chip Select Registers define the characteristics of the 15 chip selects according to the following rules:

SPI_CSR0 defines peripheral chip select signals 0 to 3.

SPI_CSR1 defines peripheral chip select signals 4 to 7.

SPI_CSR2 defines peripheral chip select signals 8 to 11.

SPI_CSR3 defines peripheral chip select signals 12 to 14.

- **MODFDIS: Mode Fault Detection**

0 = Mode fault detection is enabled.

1 = Mode fault detection is disabled.

- **WDRBT: Wait Data Read Before Transfer**

0 = No Effect. In master mode, a transfer can be initiated whatever the state of the Receive Data Register is.

1 = In Master Mode, a transfer can start only if the Receive Data Register is empty, i.e. does not contain any unread data. This mode prevents overrun error in reception.

- **LLB: Local Loopback Enable**

0 = Local loopback path disabled.

1 = Local loopback path enabled

LLB controls the local loopback on the data serializer for testing in Master Mode only. (MISO is internally connected on MOSI.)

- **PCS: Peripheral Chip Select**

This field is only used if Fixed Peripheral Select is active (PS = 0).

If PCSDEC = 0:

PCS = xxx0 NPCS[3:0] = 1110

PCS = xx01 NPCS[3:0] = 1101

PCS = x011 NPCS[3:0] = 1011

PCS = 0111 NPCS[3:0] = 0111

PCS = 1111 forbidden (no peripheral is selected)

(x = don't care)

If PCSDEC = 1:

NPCS[3:0] output signals = PCS.

- **DLYBCS: Delay Between Chip Selects**

This field defines the delay from NPCS inactive to the activation of another NPCS. The DLYBCS time guarantees non-overlapping chip selects and solves bus contentions in case of peripherals having long data float times.

If DLYBCS is less than or equal to six, six MCK periods will be inserted by default.

Otherwise, the following equation determines the delay:

$$\text{Delay Between Chip Selects} = \frac{DLYBCS}{MCK}$$

29.8.3 SPI Receive Data Register

Name: SPI_RDR

Addresses: 0xFFFA4008 (0), 0xFFFA8008 (1)

Access: Read-only

31	30	29	28	27	26	25	24
–	–	–	–	–	–	–	–

23	22	21	20	19	18	17	16
–	–	–	–	PCS			

15	14	13	12	11	10	9	8
RD							

7	6	5	4	3	2	1	0
RD							

- **RD: Receive Data**

Data received by the SPI Interface is stored in this register right-justified. Unused bits read zero.

- **PCS: Peripheral Chip Select**

In Master Mode only, these bits indicate the value on the NPCS pins at the end of a transfer. Otherwise, these bits read zero.

29.8.4 SPI Transmit Data Register

Name: SPI_TDR

Addresses: 0xFFFA400C (0), 0xFFFA800C (1)

Access: Write-only

31	30	29	28	27	26	25	24
–	–	–	–	–	–	–	LASTXFER

23	22	21	20	19	18	17	16
–	–	–	–	PCS			

15	14	13	12	11	10	9	8
TD							

7	6	5	4	3	2	1	0
TD							

- **TD: Transmit Data**

Data to be transmitted by the SPI Interface is stored in this register. Information to be transmitted must be written to the transmit data register in a right-justified format.

- **PCS: Peripheral Chip Select**

This field is only used if Variable Peripheral Select is active (PS = 1).

If PCSDEC = 0:

PCS = xxx0 NPCS[3:0] = 1110

PCS = xx01 NPCS[3:0] = 1101

PCS = x011 NPCS[3:0] = 1011

PCS = 0111 NPCS[3:0] = 0111

PCS = 1111 forbidden (no peripheral is selected)

(x = don't care)

If PCSDEC = 1:

NPCS[3:0] output signals = PCS

- **LASTXFER: Last Transfer**

0 = No effect.

1 = The current NPCS will be deasserted after the character written in TD has been transferred. When CSAAT is set, this allows to close the communication with the current serial peripheral by raising the corresponding NPCS line as soon as TD transfer has completed.

This field is only used if Variable Peripheral Select is active (PS = 1).

29.8.5 SPI Status Register

Name: SPI_SR

Addresses: 0xFFFA4010 (0), 0xFFFA8010 (1)

Access: Read-only

31	30	29	28	27	26	25	24
–	–	–	–	–	–	–	–

23	22	21	20	19	18	17	16
–	–	–	–	–	–	–	SPIENS

15	14	13	12	11	10	9	8
–	–	–	–	–	UNDES	TXEMPTY	NSSR

7	6	5	4	3	2	1	0
TXBUFE	RXBUFF	ENDTX	ENDRX	OVRES	MODF	TDRE	RDRF

- **RDRF: Receive Data Register Full**

0 = No data has been received since the last read of SPI_RDR

1 = Data has been received and the received data has been transferred from the serializer to SPI_RDR since the last read of SPI_RDR.

- **TDRE: Transmit Data Register Empty**

0 = Data has been written to SPI_TDR and not yet transferred to the serializer.

1 = The last data written in the Transmit Data Register has been transferred to the serializer.

TDRE equals zero when the SPI is disabled or at reset. The SPI enable command sets this bit to one.

- **MODF: Mode Fault Error**

0 = No Mode Fault has been detected since the last read of SPI_SR.

1 = A Mode Fault occurred since the last read of the SPI_SR.

- **OVRES: Overrun Error Status**

0 = No overrun has been detected since the last read of SPI_SR.

1 = An overrun has occurred since the last read of SPI_SR.

An overrun occurs when SPI_RDR is loaded at least twice from the serializer since the last read of the SPI_RDR.

overrun occurs when SPI_RDR is loaded at least twice from the serializer since the last read of the SPI_RDR.

- **ENDRX: End of RX Buffer**

0 = The Receive Counter Register has not reached 0 since the last write in SPI_RCR[(1)] or SPI_RNCR[(1)].

1 = The Receive Counter Register has reached 0 since the last write in SPI_RCR[(1)] or SPI_RNCR[(1)].

- **ENDTX: End of TX Buffer**

0 = The Transmit Counter Register has not reached 0 since the last write in SPI_TCR[(1)] or SPI_TNCR[(1)].

1 = The Transmit Counter Register has reached 0 since the last write in SPI_TCR[(1)] or SPI_TNCR[(1)].

- **RXBUFF: RX Buffer Full**

0 = SPI_RCR[(1)] or SPI_RNCR[(1)] has a value other than 0.

1 = Both SPI_RCR[(1)] and SPI_RNCR[(1)] have a value of 0.

- **TXBUFE: TX Buffer Empty**

0 = SPI_TCR[1] or SPI_TNCR[1] has a value other than 0.

1 = Both SPI_TCR[1] and SPI_TNCR[1] have a value of 0.

- **NSSR: NSS Rising**

0 = No rising edge detected on NSS pin since last read.

1 = A rising edge occurred on NSS pin since last read.

- **TXEMPTY: Transmission Registers Empty**

0 = As soon as data is written in SPI_TDR.

1 = SPI_TDR and internal shifter are empty. If a transfer delay has been defined, TXEMPTY is set after the completion of such delay

- **UNDES: Underrun Error Status (Slave Mode Only)**

0 = No underrun has been detected since the last read of SPI_SR.

1 = A transfer begins whereas no data has been loaded in the Transmit Data Register..

- **SPIENS: SPI Enable Status**

0 = SPI is disabled.

1 = SPI is enabled.

Note: 1. SPI_RCR, SPI_RNCR, SPI_TCR, SPI_TNCR are physically located in the PDC.

29.8.6 SPI Interrupt Enable Register

Name: SPI_IER

Addresses: 0xFFFA4014 (0), 0xFFFA8014 (1)

Access: Write-only

31	30	29	28	27	26	25	24
–	–	–	–	–	–	–	–

23	22	21	20	19	18	17	16
–	–	–	–	–	–	–	–

15	14	13	12	11	10	9	8
–	–	–	–	–	UNDES	TXEMPTY	NSSR

7	6	5	4	3	2	1	0
TXBUFE	RXBUFF	ENDTX	ENDRX	OVRES	MODF	TDRE	RDRF

0 = No effect.

1 = Enables the corresponding interrupt.

- **RDRF: Receive Data Register Full Interrupt Enable**
- **TDRE: SPI Transmit Data Register Empty Interrupt Enable**
- **MODF: Mode Fault Error Interrupt Enable**
- **OVRES: Overrun Error Interrupt Enable**
- **ENDRX: End of Receive Buffer Interrupt Enable**
- **ENDTX: End of Transmit Buffer Interrupt Enable**
- **RXBUFF: Receive Buffer Full Interrupt Enable**
- **TXBUFE: Transmit Buffer Empty Interrupt Enable**
- **NSSR: NSS Rising Interrupt Enable**
- **TXEMPTY: Transmission Registers Empty Enable**
- **UNDES: Underrun Error Interrupt Enable**

29.8.7 SPI Interrupt Disable Register

Name: SPI_IDR

Addresses: 0xFFFA4018 (0), 0xFFFA8018 (1)

Access: Write-only

31	30	29	28	27	26	25	24
–	–	–	–	–	–	–	–

23	22	21	20	19	18	17	16
–	–	–	–	–	–	–	–

15	14	13	12	11	10	9	8
–	–	–	–	–	UNDES	TXEMPTY	NSSR

7	6	5	4	3	2	1	0
TXBUFE	RXBUFF	ENDTX	ENDRX	OVRES	MODF	TDRE	RDRF

0 = No effect.

1 = Disables the corresponding interrupt.

- **RDRF: Receive Data Register Full Interrupt Disable**
- **TDRE: SPI Transmit Data Register Empty Interrupt Disable**
- **MODF: Mode Fault Error Interrupt Disable**
- **OVRES: Overrun Error Interrupt Disable**
- **ENDRX: End of Receive Buffer Interrupt Enable**
- **ENDTX: End of Transmit Buffer Interrupt Enable**
- **RXBUFF: Receive Buffer Full Interrupt Enable**
- **TXBUFE: Transmit Buffer Empty Interrupt Enable**
- **NSSR: NSS Rising Interrupt Enable**
- **TXEMPTY: Transmission Registers Empty Enable**
- **UNDES: Underrun Error Interrupt Enable**

29.8.8 SPI Interrupt Mask Register

Name: SPI_IMR

Addresses: 0xFFFA401C (0), 0xFFFA801C (1)

Access: Read-only

31	30	29	28	27	26	25	24
–	–	–	–	–	–	–	–

23	22	21	20	19	18	17	16
–	–	–	–	–	–	–	–

15	14	13	12	11	10	9	8
–	–	–	–	–	UNDES	TXEMPTY	NSSR

7	6	5	4	3	2	1	0
TXBUFE	RXBUFF	ENDTX	ENDRX	OVRES	MODF	TDRE	RDRF

0 = The corresponding interrupt is not enabled.

1 = The corresponding interrupt is enabled.

- **RDRF: Receive Data Register Full Interrupt Mask**
- **TDRE: SPI Transmit Data Register Empty Interrupt Mask**
- **MODF: Mode Fault Error Interrupt Mask**
- **OVRES: Overrun Error Interrupt Mask**
- **ENDRX: End of Receive Buffer Interrupt Enable**
- **ENDTX: End of Transmit Buffer Interrupt Enable**
- **RXBUFF: Receive Buffer Full Interrupt Enable**
- **TXBUFE: Transmit Buffer Empty Interrupt Enable**
- **NSSR: NSS Rising Interrupt Enable**
- **TXEMPTY: Transmission Registers Empty Enable**
- **UNDES: Underrun Error Interrupt Enable**

29.8.9 SPI Chip Select Register

Name: SPI_CSR0... SPI_CSR3

Addresses: 0xFFFA4030 (0), 0xFFFA8030 (1)

Access: Read/Write

31	30	29	28	27	26	25	24
DLYBCT							
23	22	21	20	19	18	17	16
DLYBS							
15	14	13	12	11	10	9	8
SCBR							
7	6	5	4	3	2	1	0
BITS				CSAAT	–	NCPHA	CPOL

Note: SPI_CSRx registers must be written even if the user wants to use the defaults. The BITS field will not be updated with the translated value unless the register is written.

- **CPOL: Clock Polarity**

0 = The inactive state value of SPCK is logic level zero.

1 = The inactive state value of SPCK is logic level one.

CPOL is used to determine the inactive state value of the serial clock (SPCK). It is used with NCPHA to produce the required clock/data relationship between master and slave devices.

- **NCPHA: Clock Phase**

0 = Data is changed on the leading edge of SPCK and captured on the following edge of SPCK.

1 = Data is captured on the leading edge of SPCK and changed on the following edge of SPCK.

NCPHA determines which edge of SPCK causes data to change and which edge causes data to be captured. NCPHA is used with CPOL to produce the required clock/data relationship between master and slave devices.

- **CSAAT: Chip Select Active After Transfer**

0 = The Peripheral Chip Select Line rises as soon as the last transfer is achieved.

1 = The Peripheral Chip Select does not rise after the last transfer is achieved. It remains active until a new transfer is requested on a different chip select.

- **BITS: Bits Per Transfer** (See the (Note:) below the register table; Section 29.8.9 “SPI Chip Select Register” on page 437.)

The BITS field determines the number of data bits transferred. Reserved values should not be used.

BITS	Bits Per Transfer
0000	8
0001	9
0010	10
0011	11
0100	12
0101	13
0110	14
0111	15
1000	16

BITS	Bits Per Transfer
1001	Reserved
1010	Reserved
1011	Reserved
1100	Reserved
1101	Reserved
1110	Reserved
1111	Reserved

- **SCBR: Serial Clock Baud Rate**

In Master Mode, the SPI Interface uses a modulus counter to derive the SPCK baud rate from the Master Clock MCK. The Baud rate is selected by writing a value from 1 to 255 in the SCBR field. The following equations determine the SPCK baud rate:

$$\text{SPCK Baudrate} = \frac{MCK}{SCBR}$$

Programming the SCBR field at 0 is forbidden. Triggering a transfer while SCBR is at 0 can lead to unpredictable results.

At reset, SCBR is 0 and the user has to program it at a valid value before performing the first transfer.

- **DLYBS: Delay Before SPCK**

This field defines the delay from NPCS valid to the first valid SPCK transition.

When DLYBS equals zero, the NPCS valid to SPCK transition is 1/2 the SPCK clock period.

Otherwise, the following equations determine the delay:

$$\text{Delay Before SPCK} = \frac{DLYBS}{MCK}$$

- **DLYBCT: Delay Between Consecutive Transfers**

This field defines the delay between two consecutive transfers with the same peripheral without removing the chip select. The delay is always inserted after each transfer and before removing the chip select if needed.

When DLYBCT equals zero, no delay between consecutive transfers is inserted and the clock keeps its duty cycle over the character transfers.

Otherwise, the following equation determines the delay:

$$\text{Delay Between Consecutive Transfers} = \frac{32 \times DLYBCT}{MCK}$$

30. Parallel Input/Output Controller (PIO)

30.1 Description

The Parallel Input/Output Controller (PIO) manages up to 32 fully programmable input/output lines. Each I/O line may be dedicated as a general-purpose I/O or be assigned to a function of an embedded peripheral. This assures effective optimization of the pins of a product.

Each I/O line is associated with a bit number in all of the 32-bit registers of the 32-bit wide User Interface.

Each I/O line of the PIO Controller features:

- An input change interrupt enabling level change detection on any I/O line.
- A glitch filter providing rejection of pulses lower than one-half of clock cycle.
- Multi-drive capability similar to an open drain I/O line.
- Control of the the pull-up of the I/O line.
- Input visibility and output control.

The PIO Controller also features a synchronous output providing up to 32 bits of data output in a single write operation.

30.2 Block Diagram

Figure 30-1. Block Diagram

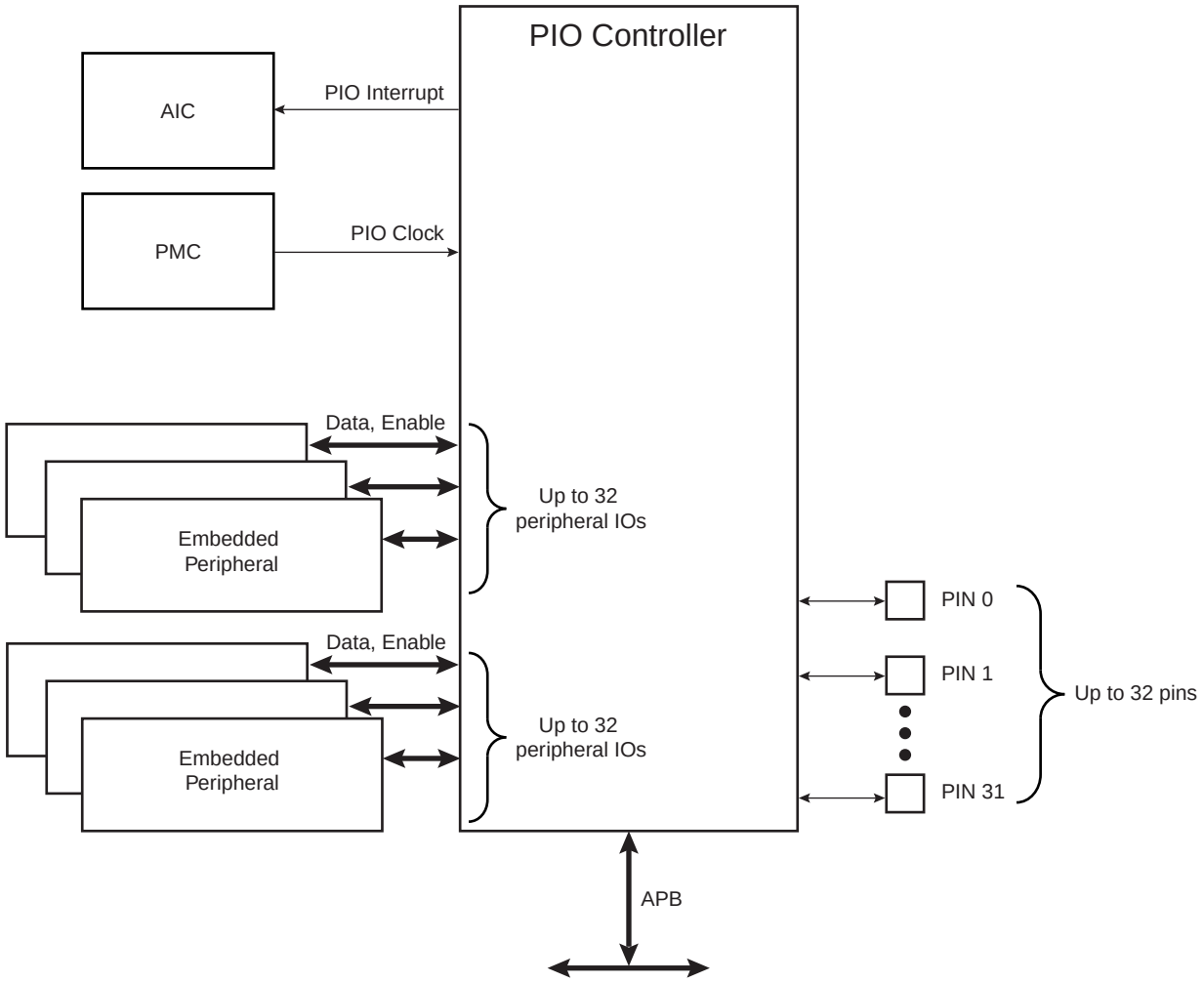

Figure 30-2. Application Block Diagram

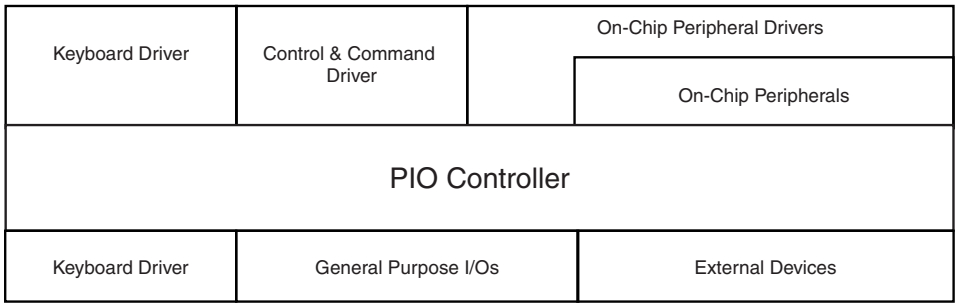

30.3 Product Dependencies

30.3.1 Pin Multiplexing

Each pin is configurable, according to product definition as either a general-purpose I/O line only, or as an I/O line multiplexed with one or two peripheral I/Os. As the multiplexing is hardware-defined and thus product-dependent, the hardware designer and programmer must carefully determine the configuration of the PIO controllers required by their application. When an I/O line is general-purpose only, i.e. not multiplexed with any peripheral I/O, programming of the PIO Controller regarding the assignment to a peripheral has no effect and only the PIO Controller can control how the pin is driven by the product.

30.3.2 External Interrupt Lines

The interrupt signals FIQ and IRQ0 to IRQn are most generally multiplexed through the PIO Controllers. However, it is not necessary to assign the I/O line to the interrupt function as the PIO Controller has no effect on inputs and the interrupt lines (FIQ or IRQs) are used only as inputs.

30.3.3 Power Management

The Power Management Controller controls the PIO Controller clock in order to save power. Writing any of the registers of the user interface does not require the PIO Controller clock to be enabled. This means that the configuration of the I/O lines does not require the PIO Controller clock to be enabled.

However, when the clock is disabled, not all of the features of the PIO Controller are available. Note that the Input Change Interrupt and the read of the pin level require the clock to be validated.

After a hardware reset, the PIO clock is disabled by default.

The user must configure the Power Management Controller before any access to the input line information.

30.3.4 Interrupt Generation

For interrupt handling, the PIO Controllers are considered as user peripherals. This means that the PIO Controller interrupt lines are connected among the interrupt sources 2 to 31. Refer to the PIO Controller peripheral identifier in the product description to identify the interrupt sources dedicated to the PIO Controllers.

The PIO Controller interrupt can be generated only if the PIO Controller clock is enabled.

30.4 Functional Description

The PIO Controller features up to 32 fully-programmable I/O lines. Most of the control logic associated to each I/O is represented in Figure 30-3. In this description each signal shown represents but one of up to 32 possible indexes.

Figure 30-3. I/O Line Control Logic

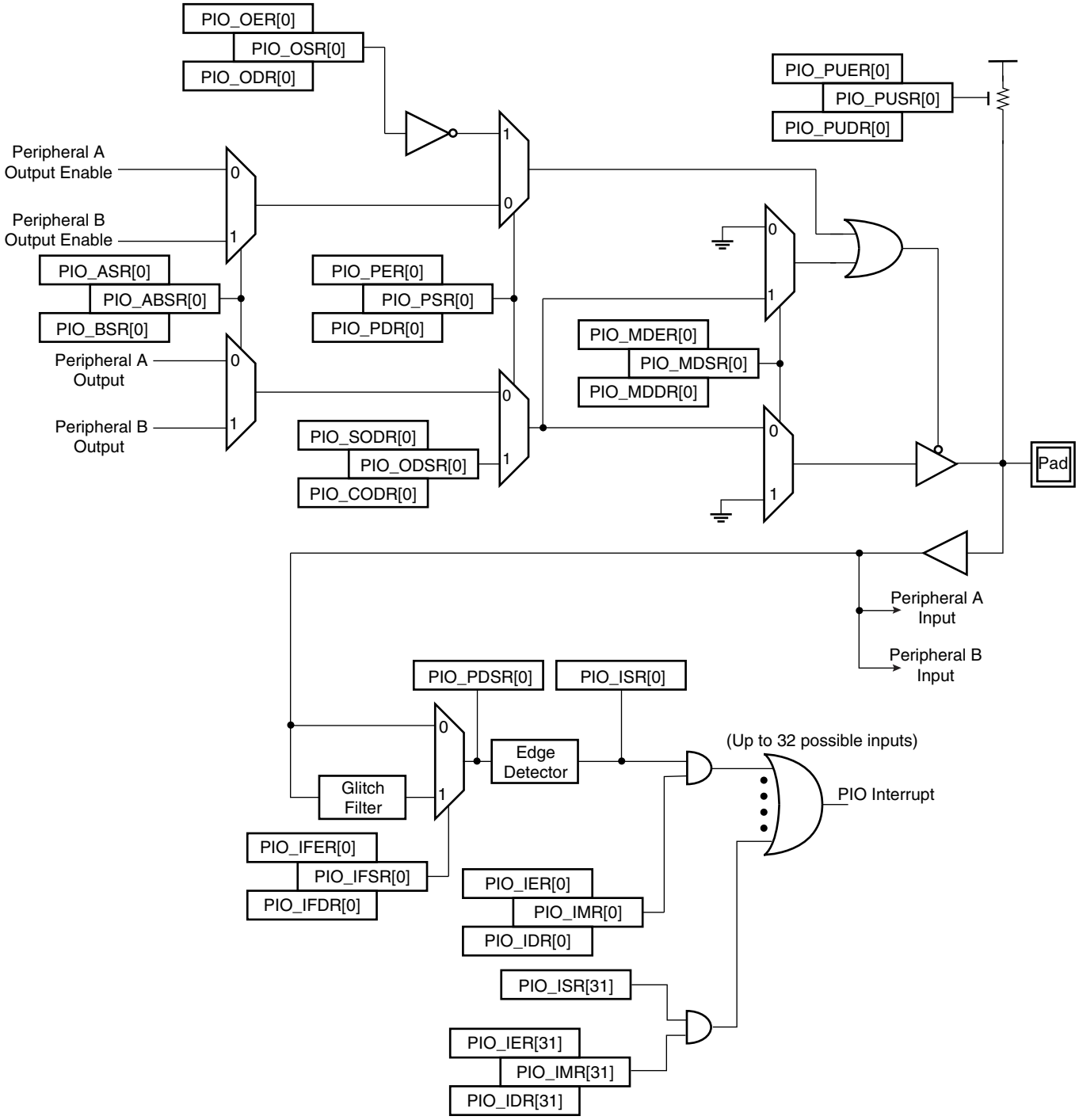

30.4.1 Pull-up Resistor Control

Each I/O line is designed with an embedded pull-up resistor. The pull-up resistor can be enabled or disabled by writing respectively PIO_PUER (Pull-up Enable Register) and PIO_PUDR (Pull-up Disable Resistor). Writing in these registers results in setting or clearing the corresponding bit in PIO_PUSR (Pull-up Status Register). Reading a 1 in PIO_PUSR means the pull-up is disabled and reading a 0 means the pull-up is enabled.

Control of the pull-up resistor is possible regardless of the configuration of the I/O line.

After reset, all of the pull-ups are enabled, i.e. PIO_PUSR resets at the value 0x0.

30.4.2 I/O Line or Peripheral Function Selection

When a pin is multiplexed with one or two peripheral functions, the selection is controlled with the registers PIO_PER (PIO Enable Register) and PIO_PDR (PIO Disable Register). The register PIO_PSR (PIO Status Register) is the result of the set and clear registers and indicates whether the pin is controlled by the corresponding peripheral or by the PIO Controller. A value of 0 indicates that the pin is controlled by the corresponding on-chip peripheral selected in the PIO_ABSR (AB Select Status Register). A value of 1 indicates the pin is controlled by the PIO controller.

If a pin is used as a general purpose I/O line (not multiplexed with an on-chip peripheral), PIO_PER and PIO_PDR have no effect and PIO_PSR returns 1 for the corresponding bit.

After reset, most generally, the I/O lines are controlled by the PIO controller, i.e. PIO_PSR resets at 1. However, in some events, it is important that PIO lines are controlled by the peripheral (as in the case of memory chip select lines that must be driven inactive after reset or for address lines that must be driven low for booting out of an external memory). Thus, the reset value of PIO_PSR is defined at the product level, depending on the multiplexing of the device.

30.4.3 Peripheral A or B Selection

The PIO Controller provides multiplexing of up to two peripheral functions on a single pin. The selection is performed by writing PIO_ASR (A Select Register) and PIO_BSR (Select B Register). PIO_ABSR (AB Select Status Register) indicates which peripheral line is currently selected. For each pin, the corresponding bit at level 0 means peripheral A is selected whereas the corresponding bit at level 1 indicates that peripheral B is selected.

Note that multiplexing of peripheral lines A and B only affects the output line. The peripheral input lines are always connected to the pin input.

After reset, PIO_ABSR is 0, thus indicating that all the PIO lines are configured on peripheral A. However, peripheral A generally does not drive the pin as the PIO Controller resets in I/O line mode.

Writing in PIO_ASR and PIO_BSR manages PIO_ABSR regardless of the configuration of the pin. However, assignment of a pin to a peripheral function requires a write in the corresponding peripheral selection register (PIO_ASR or PIO_BSR) in addition to a write in PIO_PDR.

30.4.4 Output Control

When the I/0 line is assigned to a peripheral function, i.e. the corresponding bit in PIO_PSR is at 0, the drive of the I/O line is controlled by the peripheral. Peripheral A or B, depending on the value in PIO_ABSR, determines whether the pin is driven or not.

When the I/O line is controlled by the PIO controller, the pin can be configured to be driven. This is done by writing PIO_OER (Output Enable Register) and PIO_ODR (Output Disable Register). The results of these write operations are detected in PIO_OSR (Output Status Register). When a bit in this register is at 0, the corresponding I/O line is used as an input only. When the bit is at 1, the corresponding I/O line is driven by the PIO controller.

The level driven on an I/O line can be determined by writing in PIO_SODR (Set Output Data Register) and PIO_CODR (Clear Output Data Register). These write operations respectively set and clear PIO_ODSR (Output Data Status Register), which represents the data driven on the I/O lines. Writing in PIO_OER and PIO_ODR man-

ages PIO_OSR whether the pin is configured to be controlled by the PIO controller or assigned to a peripheral function. This enables configuration of the I/O line prior to setting it to be managed by the PIO Controller.

Similarly, writing in PIO_SODR and PIO_CODR effects PIO_ODSR. This is important as it defines the first level driven on the I/O line.

30.4.5 Synchronous Data Output

Controlling all parallel busses using several PIOs requires two successive write operations in the PIO_SODR and PIO_CODR registers. This may lead to unexpected transient values. The PIO controller offers a direct control of PIO outputs by single write access to PIO_ODSR (Output Data Status Register). Only bits unmasked by PIO_OWSR (Output Write Status Register) are written. The mask bits in the PIO_OWSR are set by writing to PIO_OWER (Output Write Enable Register) and cleared by writing to PIO_OWDR (Output Write Disable Register).

After reset, the synchronous data output is disabled on all the I/O lines as PIO_OWSR resets at 0x0.

30.4.6 Multi Drive Control (Open Drain)

Each I/O can be independently programmed in Open Drain by using the Multi Drive feature. This feature permits several drivers to be connected on the I/O line which is driven low only by each device. An external pull-up resistor (or enabling of the internal one) is generally required to guarantee a high level on the line.

The Multi Drive feature is controlled by PIO_MDER (Multi-driver Enable Register) and PIO_MDDR (Multi-driver Disable Register). The Multi Drive can be selected whether the I/O line is controlled by the PIO controller or assigned to a peripheral function. PIO_MDSR (Multi-driver Status Register) indicates the pins that are configured to support external drivers.

After reset, the Multi Drive feature is disabled on all pins, i.e. PIO_MDSR resets at value 0x0.

30.4.7 Output Line Timings

Figure 30-4 shows how the outputs are driven either by writing PIO_SODR or PIO_CODR, or by directly writing PIO_ODSR. This last case is valid only if the corresponding bit in PIO_OWSR is set. Figure 30-4 also shows when the feedback in PIO_PDSR is available.

Figure 30-4. Output Line Timings

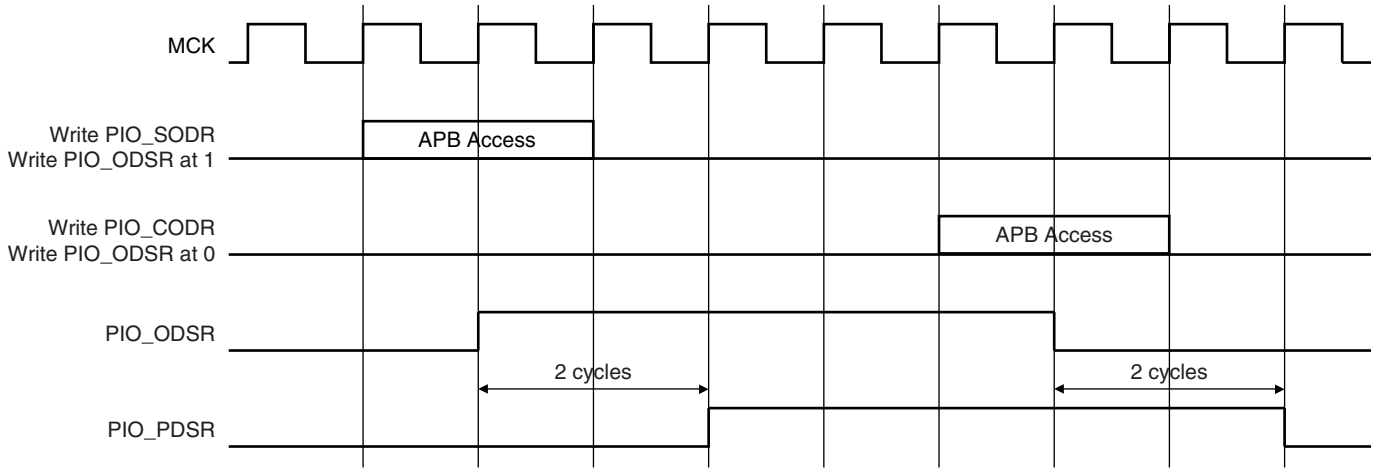

30.4.8 Inputs

The level on each I/O line can be read through PIO_PDSR (Pin Data Status Register). This register indicates the level of the I/O lines regardless of their configuration, whether uniquely as an input or driven by the PIO controller or driven by a peripheral.

Reading the I/O line levels requires the clock of the PIO controller to be enabled, otherwise PIO_PDSR reads the levels present on the I/O line at the time the clock was disabled.

30.4.9 Input Glitch Filtering

Optional input glitch filters are independently programmable on each I/O line. When the glitch filter is enabled, a glitch with a duration of less than 1/2 Master Clock (MCK) cycle is automatically rejected, while a pulse with a duration of 1 Master Clock cycle or more is accepted. For pulse durations between 1/2 Master Clock cycle and 1 Master Clock cycle the pulse may or may not be taken into account, depending on the precise timing of its occurrence. Thus for a pulse to be visible it must exceed 1 Master Clock cycle, whereas for a glitch to be reliably filtered out, its duration must not exceed 1/2 Master Clock cycle. The filter introduces one Master Clock cycle latency if the pin level change occurs before a rising edge. However, this latency does not appear if the pin level change occurs before a falling edge. This is illustrated in Figure 30-5.

The glitch filters are controlled by the register set; PIO_IFER (Input Filter Enable Register), PIO_IFDR (Input Filter Disable Register) and PIO_IFSR (Input Filter Status Register). Writing PIO_IFER and PIO_IFDR respectively sets and clears bits in PIO_IFSR. This last register enables the glitch filter on the I/O lines.

When the glitch filter is enabled, it does not modify the behavior of the inputs on the peripherals. It acts only on the value read in PIO_PDSR and on the input change interrupt detection. The glitch filters require that the PIO Controller clock is enabled.

Figure 30-5. Input Glitch Filter Timing

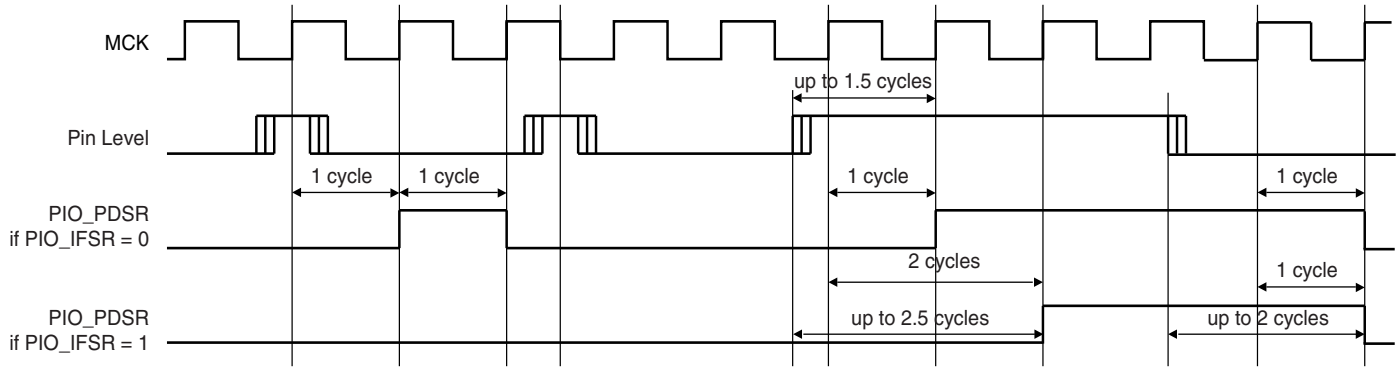

30.4.10 Input Change Interrupt

The PIO Controller can be programmed to generate an interrupt when it detects an input change on an I/O line. The Input Change Interrupt is controlled by writing PIO_IER (Interrupt Enable Register) and PIO_IDR (Interrupt Disable Register), which respectively enable and disable the input change interrupt by setting and clearing the corresponding bit in PIO_IMR (Interrupt Mask Register). As Input change detection is possible only by comparing two successive samplings of the input of the I/O line, the PIO Controller clock must be enabled. The Input Change Interrupt is available, regardless of the configuration of the I/O line, i.e. configured as an input only, controlled by the PIO Controller or assigned to a peripheral function.

When an input change is detected on an I/O line, the corresponding bit in PIO_ISR (Interrupt Status Register) is set. If the corresponding bit in PIO_IMR is set, the PIO Controller interrupt line is asserted. The interrupt signals of the thirty-two channels are ORed-wired together to generate a single interrupt signal to the Advanced Interrupt Controller.

When the software reads PIO_ISR, all the interrupts are automatically cleared. This signifies that all the interrupts that are pending when PIO_ISR is read must be handled.

Figure 30-6. Input Change Interrupt Timings

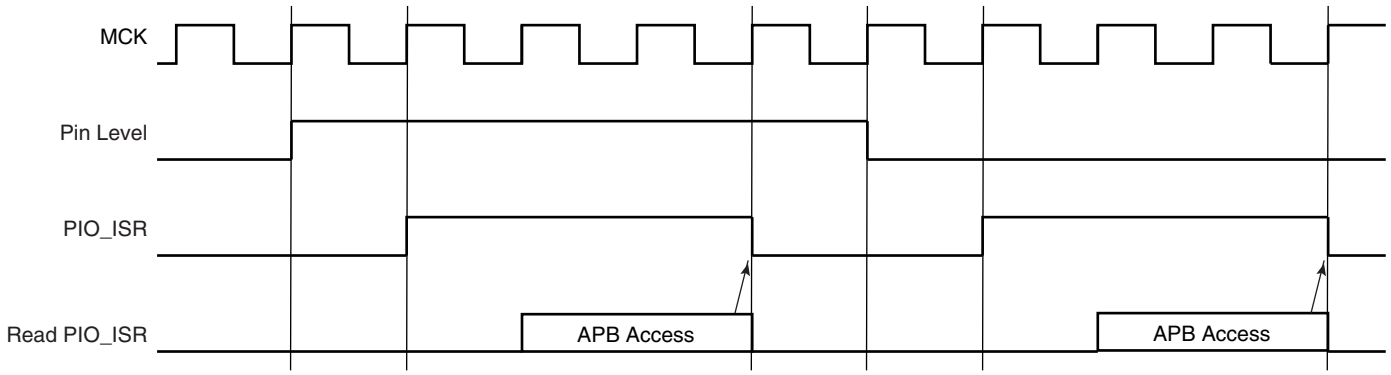

30.4.11 Write Protected Registers

To prevent any single software error that may corrupt the PIO behavior, the registers listed below can be write-protected by setting the WPEN bit in the PIO Write Protect Mode Register (PIO_WPMR).

If a write access in a write-protected register is detected, then the WPVS flag in the PIO Write Protect Status Register (PIO_WPSR) is set and the field WPVSRC indicates in which register the write access has been attempted.

The WPVS flag is automatically reset after reading the PIO Write Protect Status Register (PIO_WPSR).

List of the write-protected registers:

- “PIO Enable Register” on page 451
- “PIO Disable Register” on page 451
- “PIO Output Enable Register” on page 452
- “PIO Output Disable Register” on page 453
- “PIO Input Filter Enable Register” on page 454
- “PIO Input Filter Disable Register” on page 454
- “PIO Set Output Data Register” on page 455
- “PIO Clear Output Data Register” on page 456
- “PIO Multi-driver Enable Register” on page 459
- “PIO Multi-driver Disable Register” on page 460
- “PIO Pull Up Disable Register” on page 461
- “PIO Pull Up Enable Register” on page 461
- “PIO Peripheral A Select Register” on page 462
- “PIO Peripheral B Select Register” on page 463
- “PIO Output Write Enable Register” on page 464
- “PIO Output Write Disable Register” on page 464

30.4.12 Programmable I/O Delays

The PIO interface consists of a series of signals driven by peripherals or directly by sofware. The simultaneous switching outputs on these busses may lead to a peak of current in the internal and external power supply lines.

In order to reduce the peak of current in such cases, additional propagation delays can be adjusted independently for pad buffers by means of configuration registers, PIO_DELAY.

For each I/O, the additional programmable delays range from 0 to 4 ns (Worst Case PVT). The delay can differ between IOs supporting this feature. The delay can be modified according to programming for each I/O. The mini-

mum additional delay that can be programmed on a PAD supporting this feature is 1/16 of the maximum programmable delay.

Only PADs PC[12], PC[7:2], PA[30:23] and PA[9:2] can be configured.

When programming 0x0 in fields, no delay is added (reset value) and the propagation delay of the pad buffers is the inherent delay of the pad buffer. When programming 0xF in field, the propagation delay of the corresponding pad is maximal.

Figure 30-7. Programmable I/O Delays

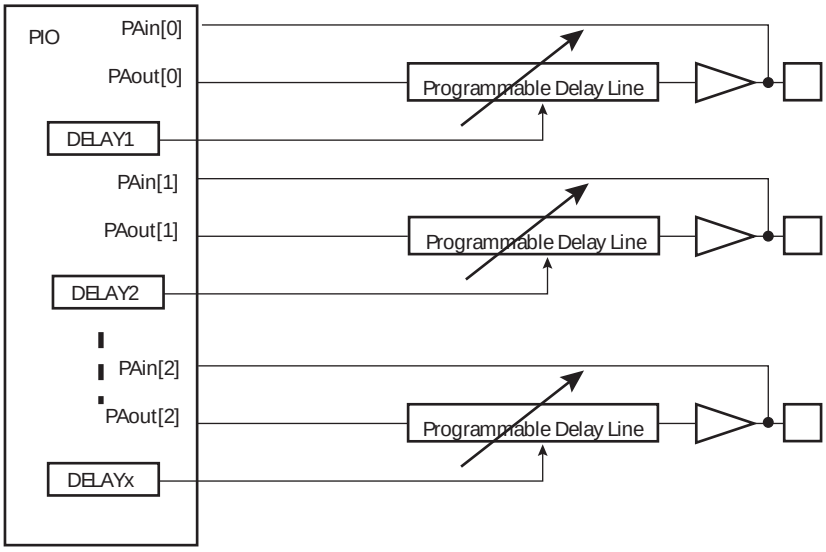

30.5 I/O Lines Programming Example

The programing example as shown in Table 30-1 below is used to define the following configuration.

- 4-bit output port on I/O lines 0 to 3, (should be written in a single write operation), open-drain, with pull-up resistor
- Four output signals on I/O lines 4 to 7 (to drive LEDs for example), driven high and low, no pull-up resistor
- Four input signals on I/O lines 8 to 11 (to read push-button states for example), with pull-up resistors, glitch filters and input change interrupts
- Four input signals on I/O line 12 to 15 to read an external device status (polled, thus no input change interrupt), no pull-up resistor, no glitch filter
- I/O lines 16 to 19 assigned to peripheral A functions with pull-up resistor
- I/O lines 20 to 23 assigned to peripheral B functions, no pull-up resistor
- I/O line 24 to 27 assigned to peripheral A with Input Change Interrupt and pull-up resistor

Table 30-1. Programming Example

Register	Value to be Written
PIO_PER	0x0000 FFFF
PIO_PDR	0x0FFF 0000
PIO_OER	0x0000 00FF
PIO_ODR	0x0FFF FF00

Table 30-1. Programming Example (Continued)

PIO_IFER	0x0000 0F00
PIO_IFDR	0x0FFF F0FF
PIO_SODR	0x0000 0000
PIO_CODR	0x0FFF FFFF
PIO_IER	0x0F00 0F00
PIO_IDR	0x00FF F0FF
PIO_MDER	0x0000 000F
PIO_MDDR	0x0FFF FFF0
PIO_PUDR	0x00F0 00F0
PIO_PUER	0x0F0F FF0F
PIO_ASR	0x0F0F 0000
PIO_BSR	0x00F0 0000
PIO_OWER	0x0000 000F
PIO_OWDR	0x0FFF FFF0

30.6 Parallel Input/Output Controller (PIO) User Interface

Each I/O line controlled by the PIO Controller is associated with a bit in each of the PIO Controller User Interface registers. Each register is 32 bits wide. If a parallel I/O line is not defined, writing to the corresponding bits has no effect. Undefined bits read zero. If the I/O line is not multiplexed with any peripheral, the I/O line is controlled by the PIO Controller and PIO_PSR returns 1 systematically.

Table 30-2. Register Mapping

Offset	Register	Name	Access	Reset
0x0000	PIO Enable Register	PIO_PER	Write-only	–
0x0004	PIO Disable Register	PIO_PDR	Write-only	–
0x0008	PIO Status Register	PIO_PSR	Read-only	(1)
0x000C	Reserved			
0x0010	Output Enable Register	PIO_OER	Write-only	–
0x0014	Output Disable Register	PIO_ODR	Write-only	–
0x0018	Output Status Register	PIO_OSR	Read-only	0x0000 0000
0x001C	Reserved			
0x0020	Glitch Input Filter Enable Register	PIO_IFER	Write-only	–
0x0024	Glitch Input Filter Disable Register	PIO_IFDR	Write-only	–
0x0028	Glitch Input Filter Status Register	PIO_IFSR	Read-only	0x0000 0000
0x002C	Reserved			
0x0030	Set Output Data Register	PIO_SODR	Write-only	–
0x0034	Clear Output Data Register	PIO_CODR	Write-only	
0x0038	Output Data Status Register	PIO_ODSR	Read-only or(2) Read/Write	–
0x003C	Pin Data Status Register	PIO_PDSR	Read-only	(3)
0x0040	Interrupt Enable Register	PIO_IER	Write-only	–
0x0044	Interrupt Disable Register	PIO_IDR	Write-only	–
0x0048	Interrupt Mask Register	PIO_IMR	Read-only	0x00000000
0x004C	Interrupt Status Register(4)	PIO_ISR	Read-only	0x00000000
0x0050	Multi-driver Enable Register	PIO_MDER	Write-only	–
0x0054	Multi-driver Disable Register	PIO_MDDR	Write-only	–
0x0058	Multi-driver Status Register	PIO_MDSR	Read-only	0x00000000
0x005C	Reserved			
0x0060	Pull-up Disable Register	PIO_PUDR	Write-only	–
0x0064	Pull-up Enable Register	PIO_PUER	Write-only	–
0x0068	Pad Pull-up Status Register	PIO_PUSR	Read-only	0x00000000
0x006C	Reserved			

Table 30-2. Register Mapping (Continued)

Offset	Register	Name	Access	Reset
0x0070	Peripheral A Select Register[5]	PIO_ASR	Write-only	–
0x0074	Peripheral B Select Register[5]	PIO_BSR	Write-only	–
0x0078	AB Status Register[5]	PIO_ABSR	Read-only	0x00000000
0x007C-0x009C	Reserved			
0x00A0	Output Write Enable	PIO_OWER	Write-only	–
0x00A4	Output Write Disable	PIO_OWDR	Write-only	–
0x00A8	Output Write Status Register	PIO_OWSR	Read-only	0x00000000
0x00AC	Reserved			
0x00C0	I/O Delay Register	PIO_DELAY0R	Read/Write	0x00000000
0x00C4	I/O Delay Register	PIO_DELAY1R	Read/Write	0x00000000
0x00C8	I/O Delay Register	PIO_DELAY2R	Read/Write	0x00000000
0x00CC	I/O Delay Register	PIO_DELAY3R	Read/Write	0x00000000
0x00C4-00E0	Reserved			
0x00E4	Write Protect Mode Register	PIO_WPMR	Read-write	0x00000000
0x00E8	Write Protect Status Register	PIO_WPSR	Read-only	0x00000000
0x00F0-0x00F8	Reserved			

Notes:
1. Reset value of PIO_PSR depends on the product implementation.
2. PIO_ODSR is Read-only or Read/Write depending on PIO_OWSR I/O lines.
3. Reset value of PIO_PDSR depends on the level of the I/O lines. Reading the I/O line levels requires the clock of the PIO Controller to be enabled, otherwise PIO_PDSR reads the levels present on the I/O line at the time the clock was disabled.
4. PIO_ISR is reset at 0x0. However, the first read of the register may read a different value as input changes may have occurred.
5. Only this set of registers clears the status by writing 1 in the first register and sets the status by writing 1 in the second register.

30.6.1 PIO Enable Register

Name: PIO_PER

Addresses: 0xFFFFF200 (PIOA), 0xFFFFF400 (PIOB), 0xFFFFF600 (PIOC), 0xFFFFF800 (PIOD), 0xFFFFFA00 (PIOE)

Access Type: Write-only

31	30	29	28	27	26	25	24
P31	P30	P29	P28	P27	P26	P25	P24
23	22	21	20	19	18	17	16
P23	P22	P21	P20	P19	P18	P17	P16
15	14	13	12	11	10	9	8
P15	P14	P13	P12	P11	P10	P9	P8
7	6	5	4	3	2	1	0
P7	P6	P5	P4	P3	P2	P1	P0

- **P0-P31: PIO Enable**

0 = No effect.

1 = Enables the PIO to control the corresponding pin (disables peripheral control of the pin).

30.6.2 PIO Disable Register

Name: PIO_PDR

Addresses: 0xFFFFF204 (PIOA), 0xFFFFF404 (PIOB), 0xFFFFF604 (PIOC), 0xFFFFF804 (PIOD), 0xFFFFFA04 (PIOE)

Access Type: Write-only

31	30	29	28	27	26	25	24
P31	P30	P29	P28	P27	P26	P25	P24
23	22	21	20	19	18	17	16
P23	P22	P21	P20	P19	P18	P17	P16
15	14	13	12	11	10	9	8
P15	P14	P13	P12	P11	P10	P9	P8
7	6	5	4	3	2	1	0
P7	P6	P5	P4	P3	P2	P1	P0

- **P0-P31: PIO Disable**

0 = No effect.

1 = Disables the PIO from controlling the corresponding pin (enables peripheral control of the pin).

30.6.3 PIO Status Register

Name: PIO_PSR

Addresses: 0xFFFFF208 (PIOA), 0xFFFFF408 (PIOB), 0xFFFFF608 (PIOC), 0xFFFFF808 (PIOD), 0xFFFFFA08 (PIOE)

Access Type: Read-only

31	30	29	28	27	26	25	24
P31	P30	P29	P28	P27	P26	P25	P24
23	22	21	20	19	18	17	16
P23	P22	P21	P20	P19	P18	P17	P16
15	14	13	12	11	10	9	8
P15	P14	P13	P12	P11	P10	P9	P8
7	6	5	4	3	2	1	0
P7	P6	P5	P4	P3	P2	P1	P0

- **P0-P31: PIO Status**

0 = PIO is inactive on the corresponding I/O line (peripheral is active).

1 = PIO is active on the corresponding I/O line (peripheral is inactive).

30.6.4 PIO Output Enable Register

Name: PIO_OER

Addresses: 0xFFFFF210 (PIOA), 0xFFFFF410 (PIOB), 0xFFFFF610 (PIOC), 0xFFFFF810 (PIOD), 0xFFFFFA10 (PIOE)

Access Type: Write-only

31	30	29	28	27	26	25	24
P31	P30	P29	P28	P27	P26	P25	P24
23	22	21	20	19	18	17	16
P23	P22	P21	P20	P19	P18	P17	P16
15	14	13	12	11	10	9	8
P15	P14	P13	P12	P11	P10	P9	P8
7	6	5	4	3	2	1	0
P7	P6	P5	P4	P3	P2	P1	P0

- **P0-P31: Output Enable**

0 = No effect.

1 = Enables the output on the I/O line.

30.6.5 PIO Output Disable Register

Name: PIO_ODR

Addresses: 0xFFFFF214 (PIOA), 0xFFFFF414 (PIOB), 0xFFFFF614 (PIOC), 0xFFFFF814 (PIOD), 0xFFFFFA14 (PIOE)

Access Type: Write-only

31	30	29	28	27	26	25	24
P31	P30	P29	P28	P27	P26	P25	P24
23	22	21	20	19	18	17	16
P23	P22	P21	P20	P19	P18	P17	P16
15	14	13	12	11	10	9	8
P15	P14	P13	P12	P11	P10	P9	P8
7	6	5	4	3	2	1	0
P7	P6	P5	P4	P3	P2	P1	P0

- **P0-P31: Output Disable**

0 = No effect.

1 = Disables the output on the I/O line.

30.6.6 PIO Output Status Register

Name: PIO_OSR

Addresses: 0xFFFFF218 (PIOA), 0xFFFFF418 (PIOB), 0xFFFFF618 (PIOC), 0xFFFFF818 (PIOD), 0xFFFFFA18 (PIOE)

Access Type: Read-only

31	30	29	28	27	26	25	24
P31	P30	P29	P28	P27	P26	P25	P24
23	22	21	20	19	18	17	16
P23	P22	P21	P20	P19	P18	P17	P16
15	14	13	12	11	10	9	8
P15	P14	P13	P12	P11	P10	P9	P8
7	6	5	4	3	2	1	0
P7	P6	P5	P4	P3	P2	P1	P0

- **P0-P31: Output Status**

0 = The I/O line is a pure input.

1 = The I/O line is enabled in output.

30.6.7 PIO Input Filter Enable Register

Name: PIO_IFER

Addresses: 0xFFFFF220 (PIOA), 0xFFFFF420 (PIOB), 0xFFFFF620 (PIOC), 0xFFFFF820 (PIOD), 0xFFFFFA20 (PIOE)

Access Type: Write-only

31	30	29	28	27	26	25	24
P31	P30	P29	P28	P27	P26	P25	P24
23	22	21	20	19	18	17	16
P23	P22	P21	P20	P19	P18	P17	P16
15	14	13	12	11	10	9	8
P15	P14	P13	P12	P11	P10	P9	P8
7	6	5	4	3	2	1	0
P7	P6	P5	P4	P3	P2	P1	P0

- **P0-P31: Input Filter Enable**

0 = No effect.

1 = Enables the input glitch filter on the I/O line.

30.6.8 PIO Input Filter Disable Register

Name: PIO_IFDR

Addresses: 0xFFFFF224 (PIOA), 0xFFFFF424 (PIOB), 0xFFFFF624 (PIOC), 0xFFFFF824 (PIOD), 0xFFFFFA24 (PIOE)

Access Type: Write-only

31	30	29	28	27	26	25	24
P31	P30	P29	P28	P27	P26	P25	P24
23	22	21	20	19	18	17	16
P23	P22	P21	P20	P19	P18	P17	P16
15	14	13	12	11	10	9	8
P15	P14	P13	P12	P11	P10	P9	P8
7	6	5	4	3	2	1	0
P7	P6	P5	P4	P3	P2	P1	P0

- **P0-P31: Input Filter Disable**

0 = No effect.

1 = Disables the input glitch filter on the I/O line.

30.6.9 PIO Input Filter Status Register

Name: PIO_IFSR

Addresses: 0xFFFFF228 (PIOA), 0xFFFFF428 (PIOB), 0xFFFFF628 (PIOC), 0xFFFFF828 (PIOD), 0xFFFFFA28 (PIOE)

Access Type: Read-only

31	30	29	28	27	26	25	24
P31	P30	P29	P28	P27	P26	P25	P24
23	22	21	20	19	18	17	16
P23	P22	P21	P20	P19	P18	P17	P16
15	14	13	12	11	10	9	8
P15	P14	P13	P12	P11	P10	P9	P8
7	6	5	4	3	2	1	0
P7	P6	P5	P4	P3	P2	P1	P0

- **P0-P31: Input Filer Status**

0 = The input glitch filter is disabled on the I/O line.

1 = The input glitch filter is enabled on the I/O line.

30.6.10 PIO Set Output Data Register

Name: PIO_SODR

Addresses: 0xFFFFF230 (PIOA), 0xFFFFF430 (PIOB), 0xFFFFF630 (PIOC), 0xFFFFF830 (PIOD), 0xFFFFFA30 (PIOE)

Access Type: Write-only

31	30	29	28	27	26	25	24
P31	P30	P29	P28	P27	P26	P25	P24
23	22	21	20	19	18	17	16
P23	P22	P21	P20	P19	P18	P17	P16
15	14	13	12	11	10	9	8
P15	P14	P13	P12	P11	P10	P9	P8
7	6	5	4	3	2	1	0
P7	P6	P5	P4	P3	P2	P1	P0

- **P0-P31: Set Output Data**

0 = No effect.

1 = Sets the data to be driven on the I/O line.

30.6.11 PIO Clear Output Data Register

Name: PIO_CODR

Addresses: 0xFFFFF234 (PIOA), 0xFFFFF434 (PIOB), 0xFFFFF634 (PIOC), 0xFFFFF834 (PIOD), 0xFFFFFA34 (PIOE)

Access Type: Write-only

31	30	29	28	27	26	25	24
P31	P30	P29	P28	P27	P26	P25	P24
23	22	21	20	19	18	17	16
P23	P22	P21	P20	P19	P18	P17	P16
15	14	13	12	11	10	9	8
P15	P14	P13	P12	P11	P10	P9	P8
7	6	5	4	3	2	1	0
P7	P6	P5	P4	P3	P2	P1	P0

- **P0-P31: Clear Output Data**

0 = No effect.

1 = Clears the data to be driven on the I/O line.

30.6.12 PIO Output Data Status Register

Name: PIO_ODSR

Addresses: 0xFFFFF238 (PIOA), 0xFFFFF438 (PIOB), 0xFFFFF638 (PIOC), 0xFFFFF838 (PIOD), 0xFFFFFA38 (PIOE)

Access Type: Read-only or Read/Write

31	30	29	28	27	26	25	24
P31	P30	P29	P28	P27	P26	P25	P24
23	22	21	20	19	18	17	16
P23	P22	P21	P20	P19	P18	P17	P16
15	14	13	12	11	10	9	8
P15	P14	P13	P12	P11	P10	P9	P8
7	6	5	4	3	2	1	0
P7	P6	P5	P4	P3	P2	P1	P0

- **P0-P31: Output Data Status**

0 = The data to be driven on the I/O line is 0.

1 = The data to be driven on the I/O line is 1.

30.6.13 PIO Pin Data Status Register

Name: PIO_PDSR

Addresses: 0xFFFFF23C (PIOA), 0xFFFFF43C (PIOB), 0xFFFFF63C (PIOC), 0xFFFFF83C (PIOD), 0xFFFFFA3C (PIOE)

Access Type: Read-only

31	30	29	28	27	26	25	24
P31	P30	P29	P28	P27	P26	P25	P24
23	22	21	20	19	18	17	16
P23	P22	P21	P20	P19	P18	P17	P16
15	14	13	12	11	10	9	8
P15	P14	P13	P12	P11	P10	P9	P8
7	6	5	4	3	2	1	0
P7	P6	P5	P4	P3	P2	P1	P0

- **P0-P31: Output Data Status**

0 = The I/O line is at level 0.

1 = The I/O line is at level 1.

30.6.14 PIO Interrupt Enable Register

Name: PIO_IER

Addresses: 0xFFFFF240 (PIOA), 0xFFFFF440 (PIOB), 0xFFFFF640 (PIOC), 0xFFFFF840 (PIOD), 0xFFFFFA40 (PIOE)

Access Type: Write-only

31	30	29	28	27	26	25	24
P31	P30	P29	P28	P27	P26	P25	P24
23	22	21	20	19	18	17	16
P23	P22	P21	P20	P19	P18	P17	P16
15	14	13	12	11	10	9	8
P15	P14	P13	P12	P11	P10	P9	P8
7	6	5	4	3	2	1	0
P7	P6	P5	P4	P3	P2	P1	P0

- **P0-P31: Input Change Interrupt Enable**

0 = No effect.

1 = Enables the Input Change Interrupt on the I/O line.

30.6.15 PIO Interrupt Disable Register

Name: PIO_IDR

Addresses: 0xFFFFF244 (PIOA), 0xFFFFF444 (PIOB), 0xFFFFF644 (PIOC), 0xFFFFF844 (PIOD), 0xFFFFFA44 (PIOE)

Access Type: Write-only

31	30	29	28	27	26	25	24
P31	P30	P29	P28	P27	P26	P25	P24
23	22	21	20	19	18	17	16
P23	P22	P21	P20	P19	P18	P17	P16
15	14	13	12	11	10	9	8
P15	P14	P13	P12	P11	P10	P9	P8
7	6	5	4	3	2	1	0
P7	P6	P5	P4	P3	P2	P1	P0

- **P0-P31: Input Change Interrupt Disable**

0 = No effect.

1 = Disables the Input Change Interrupt on the I/O line.

30.6.16 PIO Interrupt Mask Register

Name: PIO_IMR

Addresses: 0xFFFFF248 (PIOA), 0xFFFFF448 (PIOB), 0xFFFFF648 (PIOC), 0xFFFFF848 (PIOD), 0xFFFFFA48 (PIOE)

Access Type: Read-only

31	30	29	28	27	26	25	24
P31	P30	P29	P28	P27	P26	P25	P24
23	22	21	20	19	18	17	16
P23	P22	P21	P20	P19	P18	P17	P16
15	14	13	12	11	10	9	8
P15	P14	P13	P12	P11	P10	P9	P8
7	6	5	4	3	2	1	0
P7	P6	P5	P4	P3	P2	P1	P0

- **P0-P31: Input Change Interrupt Mask**

0 = Input Change Interrupt is disabled on the I/O line.

1 = Input Change Interrupt is enabled on the I/O line.

30.6.17 PIO Interrupt Status Register

Name: PIO_ISR

Addresses: 0xFFFFF24C (PIOA), 0xFFFFF44C (PIOB), 0xFFFFF64C (PIOC), 0xFFFFF84C (PIOD), 0xFFFFFA4C (PIOE)

Access Type: Read-only

31	30	29	28	27	26	25	24
P31	P30	P29	P28	P27	P26	P25	P24
23	22	21	20	19	18	17	16
P23	P22	P21	P20	P19	P18	P17	P16
15	14	13	12	11	10	9	8
P15	P14	P13	P12	P11	P10	P9	P8
7	6	5	4	3	2	1	0
P7	P6	P5	P4	P3	P2	P1	P0

- **P0-P31: Input Change Interrupt Status**

0 = No Input Change has been detected on the I/O line since PIO_ISR was last read or since reset.

1 = At least one Input Change has been detected on the I/O line since PIO_ISR was last read or since reset.

30.6.18 PIO Multi-driver Enable Register

Name: PIO_MDER

Addresses: 0xFFFFF250 (PIOA), 0xFFFFF450 (PIOB), 0xFFFFF650 (PIOC), 0xFFFFF850 (PIOD), 0xFFFFFA50 (PIOE)

Access Type: Write-only

31	30	29	28	27	26	25	24
P31	P30	P29	P28	P27	P26	P25	P24
23	22	21	20	19	18	17	16
P23	P22	P21	P20	P19	P18	P17	P16
15	14	13	12	11	10	9	8
P15	P14	P13	P12	P11	P10	P9	P8
7	6	5	4	3	2	1	0
P7	P6	P5	P4	P3	P2	P1	P0

- **P0-P31: Multi Drive Enable.**

0 = No effect.

1 = Enables Multi Drive on the I/O line.

30.6.19 PIO Multi-driver Disable Register

Name: PIO_MDDR

Addresses: 0xFFFFF254 (PIOA), 0xFFFFF454 (PIOB), 0xFFFFF654 (PIOC), 0xFFFFF854 (PIOD), 0xFFFFFA54 (PIOE)

Access Type: Write-only

31	30	29	28	27	26	25	24
P31	P30	P29	P28	P27	P26	P25	P24
23	22	21	20	19	18	17	16
P23	P22	P21	P20	P19	P18	P17	P16
15	14	13	12	11	10	9	8
P15	P14	P13	P12	P11	P10	P9	P8
7	6	5	4	3	2	1	0
P7	P6	P5	P4	P3	P2	P1	P0

- **P0-P31: Multi Drive Disable.**

0 = No effect.

1 = Disables Multi Drive on the I/O line.

30.6.20 PIO Multi-driver Status Register

Name: PIO_MDSR

Addresses: 0xFFFFF258 (PIOA), 0xFFFFF458 (PIOB), 0xFFFFF658 (PIOC), 0xFFFFF858 (PIOD), 0xFFFFFA58 (PIOE)

Access Type: Read-only

31	30	29	28	27	26	25	24
P31	P30	P29	P28	P27	P26	P25	P24
23	22	21	20	19	18	17	16
P23	P22	P21	P20	P19	P18	P17	P16
15	14	13	12	11	10	9	8
P15	P14	P13	P12	P11	P10	P9	P8
7	6	5	4	3	2	1	0
P7	P6	P5	P4	P3	P2	P1	P0

- **P0-P31: Multi Drive Status.**

0 = The Multi Drive is disabled on the I/O line. The pin is driven at high and low level.

1 = The Multi Drive is enabled on the I/O line. The pin is driven at low level only.

30.6.21 PIO Pull Up Disable Register

Name: PIO_PUDR

Addresses: 0xFFFFF260 (PIOA), 0xFFFFF460 (PIOB), 0xFFFFF660 (PIOC), 0xFFFFF860 (PIOD), 0xFFFFFA60 (PIOE)

Access Type: Write-only

31	30	29	28	27	26	25	24
P31	P30	P29	P28	P27	P26	P25	P24
23	22	21	20	19	18	17	16
P23	P22	P21	P20	P19	P18	P17	P16
15	14	13	12	11	10	9	8
P15	P14	P13	P12	P11	P10	P9	P8
7	6	5	4	3	2	1	0
P7	P6	P5	P4	P3	P2	P1	P0

- **P0-P31: Pull Up Disable.**

0 = No effect.

1 = Disables the pull up resistor on the I/O line.

30.6.22 PIO Pull Up Enable Register

Name: PIO_PUER

Addresses: 0xFFFFF264 (PIOA), 0xFFFFF464 (PIOB), 0xFFFFF664 (PIOC), 0xFFFFF864 (PIOD), 0xFFFFFA64 (PIOE)

Access Type: Write-only

31	30	29	28	27	26	25	24
P31	P30	P29	P28	P27	P26	P25	P24
23	22	21	20	19	18	17	16
P23	P22	P21	P20	P19	P18	P17	P16
15	14	13	12	11	10	9	8
P15	P14	P13	P12	P11	P10	P9	P8
7	6	5	4	3	2	1	0
P7	P6	P5	P4	P3	P2	P1	P0

- **P0-P31: Pull Up Enable.**

0 = No effect.

1 = Enables the pull up resistor on the I/O line.

30.6.23 PIO Pull Up Status Register

Name: PIO_PUSR

Addresses: 0xFFFFF268 (PIOA), 0xFFFFF468 (PIOB), 0xFFFFF668 (PIOC), 0xFFFFF868 (PIOD), 0xFFFFFA68 (PIOE)

Access Type: Read-only

31	30	29	28	27	26	25	24
P31	P30	P29	P28	P27	P26	P25	P24
23	22	21	20	19	18	17	16
P23	P22	P21	P20	P19	P18	P17	P16
15	14	13	12	11	10	9	8
P15	P14	P13	P12	P11	P10	P9	P8
7	6	5	4	3	2	1	0
P7	P6	P5	P4	P3	P2	P1	P0

- **P0-P31: Pull Up Status.**

0 = Pull Up resistor is enabled on the I/O line.

1 = Pull Up resistor is disabled on the I/O line.

30.6.24 PIO Peripheral A Select Register

Name: PIO_ASR

Addresses: 0xFFFFF270 (PIOA), 0xFFFFF470 (PIOB), 0xFFFFF670 (PIOC), 0xFFFFF870 (PIOD), 0xFFFFFA70 (PIOE)

Access Type: Write-only

31	30	29	28	27	26	25	24
P31	P30	P29	P28	P27	P26	P25	P24
23	22	21	20	19	18	17	16
P23	P22	P21	P20	P19	P18	P17	P16
15	14	13	12	11	10	9	8
P15	P14	P13	P12	P11	P10	P9	P8
7	6	5	4	3	2	1	0
P7	P6	P5	P4	P3	P2	P1	P0

- **P0-P31: Peripheral A Select.**

0 = No effect.

1 = Assigns the I/O line to the Peripheral A function.

30.6.25 PIO Peripheral B Select Register

Name: PIO_BSR

Addresses: 0xFFFFF274 (PIOA), 0xFFFFF474 (PIOB), 0xFFFFF674 (PIOC), 0xFFFFF874 (PIOD), 0xFFFFFA74 (PIOE)

Access Type: Write-only

31	30	29	28	27	26	25	24
P31	P30	P29	P28	P27	P26	P25	P24
23	22	21	20	19	18	17	16
P23	P22	P21	P20	P19	P18	P17	P16
15	14	13	12	11	10	9	8
P15	P14	P13	P12	P11	P10	P9	P8
7	6	5	4	3	2	1	0
P7	P6	P5	P4	P3	P2	P1	P0

- **P0-P31: Peripheral B Select.**

0 = No effect.

1 = Assigns the I/O line to the peripheral B function.

30.6.26 PIO Peripheral A B Status Register

Name: PIO_ABSR

Addresses: 0xFFFFF278 (PIOA), 0xFFFFF478 (PIOB), 0xFFFFF678 (PIOC), 0xFFFFF878 (PIOD), 0xFFFFFA78 (PIOE)

Access Type: Read-only

31	30	29	28	27	26	25	24
P31	P30	P29	P28	P27	P26	P25	P24
23	22	21	20	19	18	17	16
P23	P22	P21	P20	P19	P18	P17	P16
15	14	13	12	11	10	9	8
P15	P14	P13	P12	P11	P10	P9	P8
7	6	5	4	3	2	1	0
P7	P6	P5	P4	P3	P2	P1	P0

- **P0-P31: Peripheral A B Status.**

0 = The I/O line is assigned to the Peripheral A.

1 = The I/O line is assigned to the Peripheral B.

30.6.27 PIO Output Write Enable Register

Name: PIO_OWER

Addresses: 0xFFFFF2A0 (PIOA), 0xFFFFF4A0 (PIOB), 0xFFFFF6A0 (PIOC), 0xFFFFF8A0 (PIOD), 0xFFFFFAA0 (PIOE)

Access Type: Write-only

31	30	29	28	27	26	25	24
P31	P30	P29	P28	P27	P26	P25	P24
23	22	21	20	19	18	17	16
P23	P22	P21	P20	P19	P18	P17	P16
15	14	13	12	11	10	9	8
P15	P14	P13	P12	P11	P10	P9	P8
7	6	5	4	3	2	1	0
P7	P6	P5	P4	P3	P2	P1	P0

- **P0-P31: Output Write Enable.**

0 = No effect.

1 = Enables writing PIO_ODSR for the I/O line.

30.6.28 PIO Output Write Disable Register

Name: PIO_OWDR

Addresses: 0xFFFFF2A4 (PIOA), 0xFFFFF4A4 (PIOB), 0xFFFFF6A4 (PIOC), 0xFFFFF8A4 (PIOD), 0xFFFFFAA4 (PIOE)

Access Type: Write-only

31	30	29	28	27	26	25	24
P31	P30	P29	P28	P27	P26	P25	P24
23	22	21	20	19	18	17	16
P23	P22	P21	P20	P19	P18	P17	P16
15	14	13	12	11	10	9	8
P15	P14	P13	P12	P11	P10	P9	P8
7	6	5	4	3	2	1	0
P7	P6	P5	P4	P3	P2	P1	P0

- **P0-P31: Output Write Disable.**

0 = No effect.

1 = Disables writing PIO_ODSR for the I/O line.

30.6.29 PIO Output Write Status Register

Name: PIO_OWSR

Addresses: 0xFFFFF2A8 (PIOA), 0xFFFFF4A8 (PIOB), 0xFFFFF6A8 (PIOC), 0xFFFFF8A8 (PIOD), 0xFFFFFAA8 (PIOE)

Access Type: Read-only

31	30	29	28	27	26	25	24
P31	P30	P29	P28	P27	P26	P25	P24
23	22	21	20	19	18	17	16
P23	P22	P21	P20	P19	P18	P17	P16
15	14	13	12	11	10	9	8
P15	P14	P13	P12	P11	P10	P9	P8
7	6	5	4	3	2	1	0
P7	P6	P5	P4	P3	P2	P1	P0

- **P0-P31: Output Write Status.**

0 = Writing PIO_ODSR does not affect the I/O line.

1 = Writing PIO_ODSR affects the I/O line.

30.6.30 PIO I/O Delay Register

Register Name: PIO_DELAYxR [x=0..3]

Addresses: 0xFFFFF2C0 (PIOA), 0xFFFFF4C0 (PIOB), 0xFFFFF6C0 (PIOC), 0xFFFFF8C0 (PIOD), 0xFFFFFAC0 (PIOE)

Access Type: Read-write

Reset Value: See Figure 30-2

31	30	29	28	27	26	25	24
Delay7				Delay6			

23	22	21	20	19	18	17	16
Delay5				Delay4			

15	14	13	12	11	10	9	8
Delay3				Delay2			

7	6	5	4	3	2	1	0
Delay1				Delay0			

- **Delay x:**

Gives the number of elements in the delay line associated to pad x.

30.6.31 PIO Write Protect Mode Register

Register Name: PIO_WPMR

Addresses: 0xFFFFF2E4 (PIOA), 0xFFFFF4E4 (PIOB), 0xFFFFF6E4 (PIOC), 0xFFFFF8E4 (PIOD), 0xFFFFFAE4 (PIOE)

Access Type: Read-write

Reset Value: See Table 30-2

31	30	29	28	27	26	25	24
WPKEY							

23	22	21	20	19	18	17	16
WPKEY							

15	14	13	12	11	10	9	8
WPKEY							

7	6	5	4	3	2	1	0
—	—	—	—	—	—	—	WPEN

- **WPEN: Write Protect Enable**

0 = Disables the Write Protect if WPKEY corresponds to 0x50494F (“PIO” in ASCII).

1 = Enables the Write Protect if WPKEY corresponds to 0x50494F (“PIO” in ASCII).

Protects the registers listed below:

- “PIO Enable Register” on page 451
- “PIO Disable Register” on page 451
- “PIO Output Enable Register” on page 452
- “PIO Output Disable Register” on page 453
- “PIO Input Filter Enable Register” on page 454
- “PIO Input Filter Disable Register” on page 454
- “PIO Set Output Data Register” on page 455
- “PIO Clear Output Data Register” on page 456
- “PIO Multi-driver Enable Register” on page 459
- “PIO Multi-driver Disable Register” on page 460
- “PIO Pull Up Disable Register” on page 461
- “PIO Pull Up Enable Register” on page 461
- “PIO Peripheral A Select Register” on page 462
- “PIO Peripheral B Select Register” on page 463
- “PIO Output Write Enable Register” on page 464
- “PIO Output Write Disable Register” on page 464

- **WPKEY: Write Protect KEY**

Should be written at value 0x534D43 (“SMC” in ASCII). Writing any other value in this field aborts the write operation of the WPEN bit. Always reads as 0.

30.6.32 PIO Write Protect Status Register

Register Name: PIO_WPSR

Addresses: 0xFFFFF2E8 (PIOA), 0xFFFFF4E8 (PIOB), 0xFFFFF6E8 (PIOC), 0xFFFFF8E8 (PIOD), 0xFFFFFAE8 (PIOE)

Access Type: Read-only

Reset Value: See Table 30-2

31	30	29	28	27	26	25	24
—	—	—	—	—	—	—	—

23	22	21	20	19	18	17	16
WPVSRC							

15	14	13	12	11	10	9	8
WPVSRC							

7	6	5	4	3	2	1	0
—	—	—	—	—	—	—	WPVS

- **WPVS: Write Protect Enable**

0 = No Write Protect Violation has occurred since the last read of the PIO_WPSR register.

1 = A Write Protect Violation occurred since the last read of the PIO_WPSR register. If this violation is an unauthorized attempt to write a protected register, the associated violation is reported into field WPVSRC.

- **WPVSRC: Write Protect Violation Source**

When WPVS is active, this field indicates the write-protected register (through address offset or code) in which a write access has been attempted.

Note: Reading PIO_WPSR automatically clears all fields.

31. Two-wire Interface (TWI)

31.1 Description

The Atmel Two-wire Interface (TWI) interconnects components on a unique two-wire bus, made up of one clock line and one data line with speeds of up to 400 Kbits per second, based on a byte-oriented transfer format. It can be used with any Atmel Two-wire Interface bus Serial EEPROM and I²C compatible device such as Real Time Clock (RTC), Dot Matrix/Graphic LCD Controllers and Temperature Sensor, to name but a few. The TWI is programmable as a master or a slave with sequential or single-byte access. Multiple master capability is supported. 20

Arbitration of the bus is performed internally and puts the TWI in slave mode automatically if the bus arbitration is lost.

A configurable baud rate generator permits the output data rate to be adapted to a wide range of core clock frequencies.

Below, Table 31-1 lists the compatibility level of the Atmel Two-wire Interface in Master Mode and a full I^2C compatible device.

Table 31-1. Atmel TWI compatibility with I^2C Standard

I^2C Standard	Atmel TWI
Standard Mode Speed (100 kHz)	Supported
Fast Mode Speed (400 kHz)	Supported
7 or 10 bits Slave Addressing	Supported
START BYTE[(1)]	Not Supported
Repeated Start (Sr) Condition	Supported
ACK and NACK Management	Supported
Slope control and input filtering (Fast mode)	Not Supported
Clock stretching	Supported
Multi Master Capability	Supported

Note: 1. START + b000000001 + Ack + Sr

31.2 Embedded Characteristics

- Compatibility with standard two-wire serial memory
- One, two or three bytes for slave address
- Sequential read/write operations
- Supports either master or slave modes
- Compatible with Standard Two-wire Serial Memories
- Master, Multi-master and Slave Mode Operation
- Bit Rate: Up to 400 Kbits
- General Call Supported in Slave mode

31.3 List of Abbreviations

Table 31-2. Abbreviations

Abbreviation	Description
TWI	Two-wire Interface
A	Acknowledge
NA	Non Acknowledge
P	Stop
S	Start
Sr	Repeated Start
SADR	Slave Address
ADR	Any address except SADR
R	Read
W	Write

31.4 Block Diagram

Figure 31-1. Block Diagram

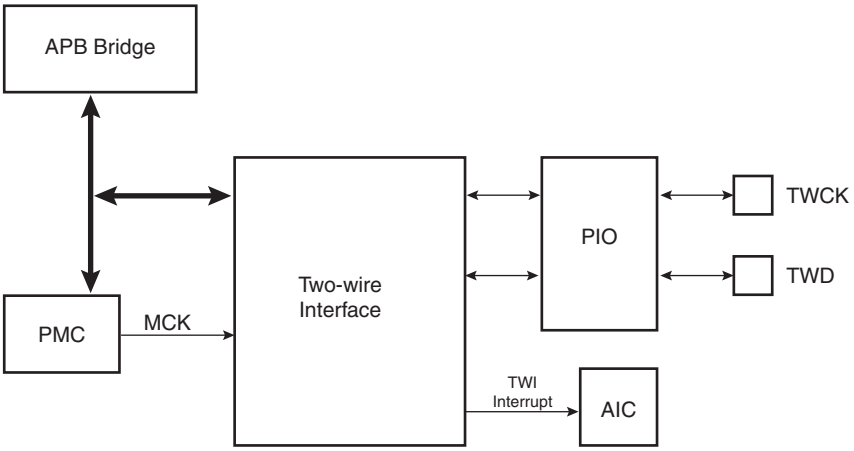

31.5 Application Block Diagram

Figure 31-2. Application Block Diagram

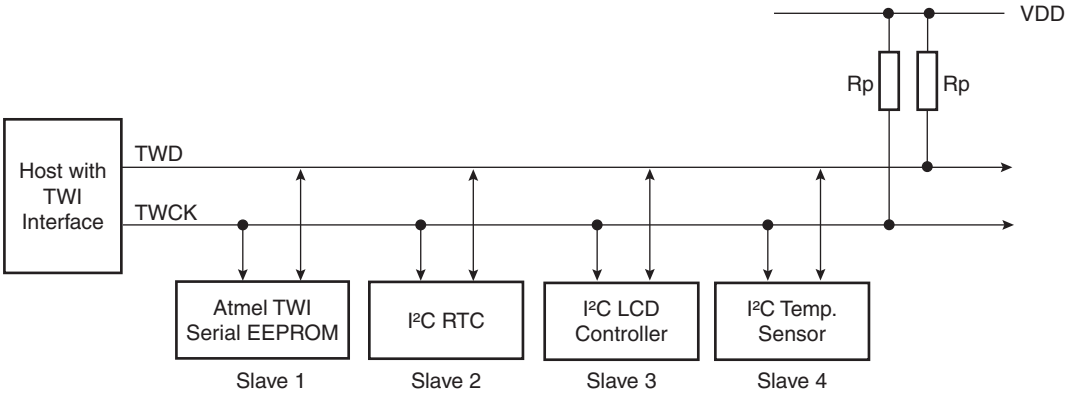

Rp: Pull up value as given by the I²C Standard

31.5.1 I/O Lines Description

Table 31-3. I/O Lines Description

Pin Name	Pin Description	Type
TWD	Two-wire Serial Data	Input/Output
TWCK	Two-wire Serial Clock	Input/Output

31.6 Product Dependencies

31.6.1 I/O Lines

Both TWD and TWCK are bidirectional lines, connected to a positive supply voltage via a current source or pull-up resistor (see Figure 31-2 on page 471). When the bus is free, both lines are high. The output stages of devices connected to the bus must have an open-drain or open-collector to perform the wired-AND function.

TWD and TWCK pins may be multiplexed with PIO lines. To enable the TWI, the programmer must perform the following step:

- Program the PIO controller to dedicate TWD and TWCK as peripheral lines.

The user must not program TWD and TWCK as open-drain. It is already done by the hardware.

Table 31-4. I/O Lines

Instance	Signal	I/O Line	Peripheral
TWI0	TWCK0	PA21	A
TWI0	TWD0	PA20	A
TWI1	TWCK1	PB11	A
TWI1	TWD1	PB10	A

31.6.2 Power Management

- Enable the peripheral clock.

The TWI interface may be clocked through the Power Management Controller (PMC), thus the programmer must first configure the PMC to enable the TWI clock.

31.6.3 Interrupt

The TWI interface has an interrupt line connected to the Advanced Interrupt Controller (AIC). In order to handle interrupts, the AIC must be programmed before configuring the TWI.

Table 31-5. Peripheral IDs

Instance	ID
TWI0	12
TWI1	13

31.7 Functional Description

31.7.1 Transfer Format

The data put on the TWD line must be 8 bits long. Data is transferred MSB first; each byte must be followed by an acknowledgement. The number of bytes per transfer is unlimited (see Figure 31-4).

Each transfer begins with a START condition and terminates with a STOP condition (see Figure 31-3).

- A high-to-low transition on the TWD line while TWCK is high defines the START condition.
- A low-to-high transition on the TWD line while TWCK is high defines a STOP condition.

Figure 31-3. START and STOP Conditions

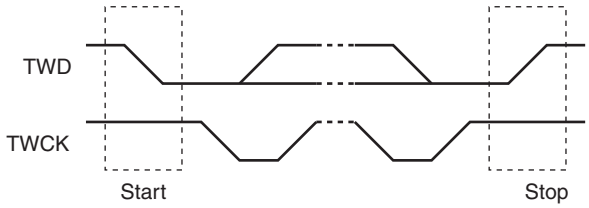

Figure 31-4. Transfer Format

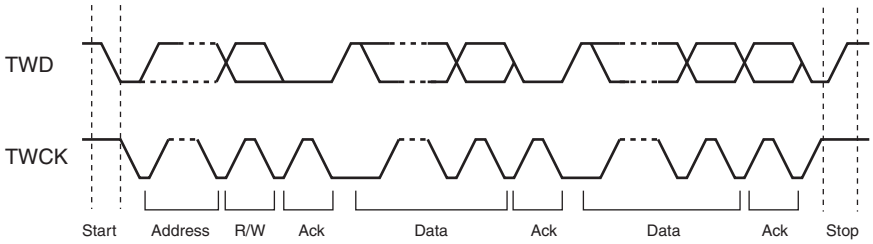

31.7.2 Modes of Operation

The TWI has six modes of operations:

- Master transmitter mode
- Master receiver mode
- Multi-master transmitter mode
- Multi-master receiver mode
- Slave transmitter mode
- Slave receiver mode

These modes are described in the following chapters.

31.8 Master Mode

31.8.1 Definition

The Master is the device that starts a transfer, generates a clock and stops it.

31.8.2 Application Block Diagram

Figure 31-5. Master Mode Typical Application Block Diagram

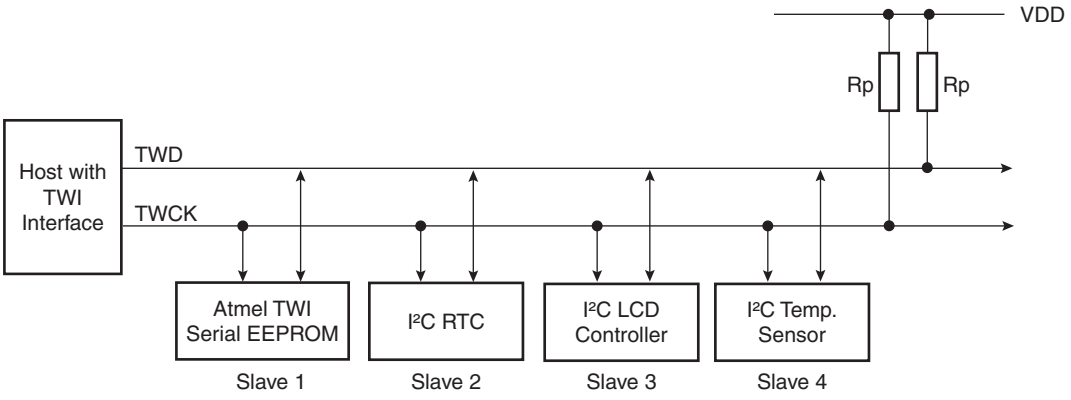

Rp: Pull up value as given by the I²C Standard

31.8.3 Programming Master Mode

The following registers have to be programmed before entering Master mode:

1. DADR (+ IADRSZ + IADR if a 10 bit device is addressed): The device address is used to access slave devices in read or write mode.
2. CKDIV + CHDIV + CLDIV: Clock Waveform.
3. SVDIS: Disable the slave mode.
4. MSEN: Enable the master mode.

31.8.4 Master Transmitter Mode

After the master initiates a Start condition when writing into the Transmit Holding Register, TWI_THR, it sends a 7-bit slave address, configured in the Master Mode register (DADR in TWI_MMR), to notify the slave device. The bit following the slave address indicates the transfer direction, 0 in this case (MREAD = 0 in TWI_MMR).

The TWI transfers require the slave to acknowledge each received byte. During the acknowledge clock pulse (9th pulse), the master releases the data line (HIGH), enabling the slave to pull it down in order to generate the acknowledge. The master polls the data line during this clock pulse and sets the Not Acknowledge bit (**NACK)** in the status register if the slave does not acknowledge the byte. As with the other status bits, an interrupt can be generated if enabled in the interrupt enable register (TWI_IER). If the slave acknowledges the byte, the data written in the TWI_THR, is then shifted in the internal shifter and transferred. When an acknowledge is detected, the TXRDY bit is set until a new write in the TWI_THR.

While no new data is written in the TWI_THR, the Serial Clock Line is tied low. When new data is written in the TWI_THR, the SCL is released and the data is sent. To generate a STOP event, the STOP command must be performed by writing in the STOP field of TWI_CR.

After a Master Write transfer, the Serial Clock line is stretched (tied low) while no new data is written in the TWI_THR or until a STOP command is performed.

See Figure 31-6, Figure 31-7, and Figure 31-8.

Figure 31-6. Master Write with One Data Byte

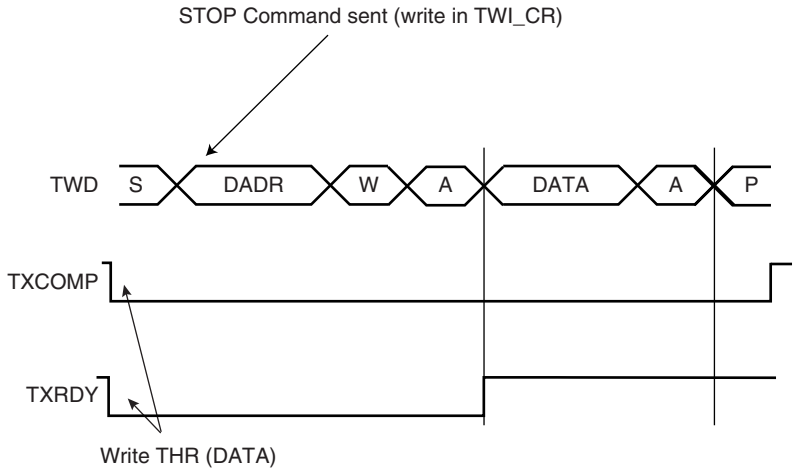

Figure 31-7. Master Write with Multiple Data Bytes

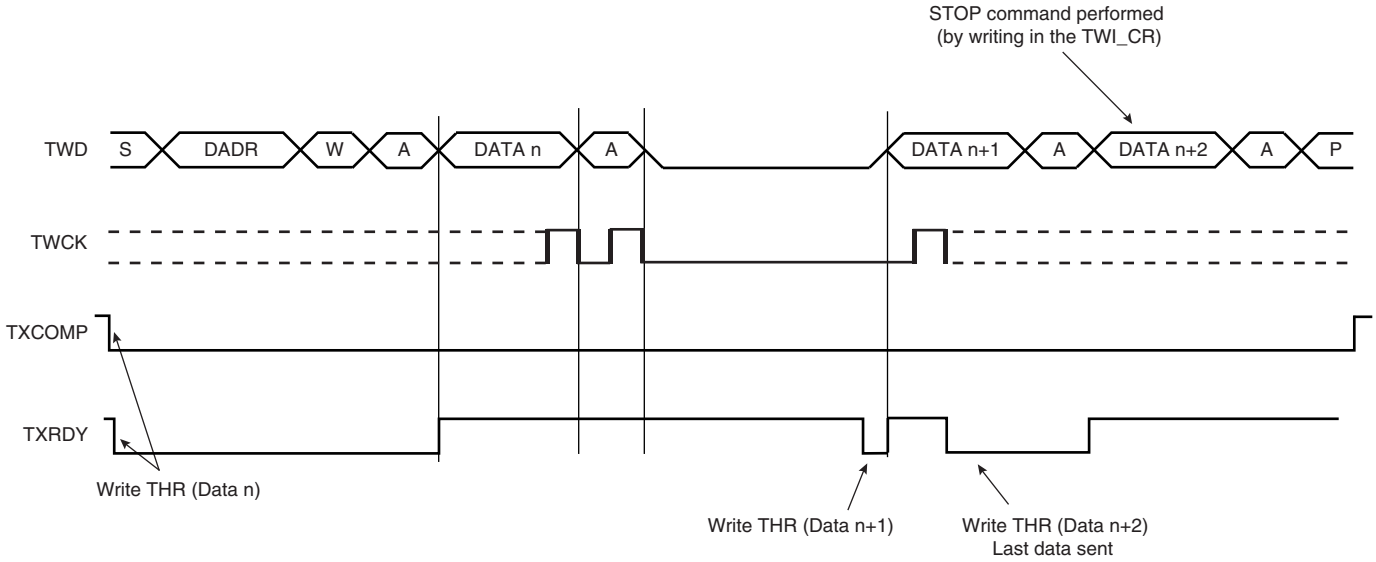

Figure 31-8. Master Write with One Byte Internal Address and Multiple Data Bytes

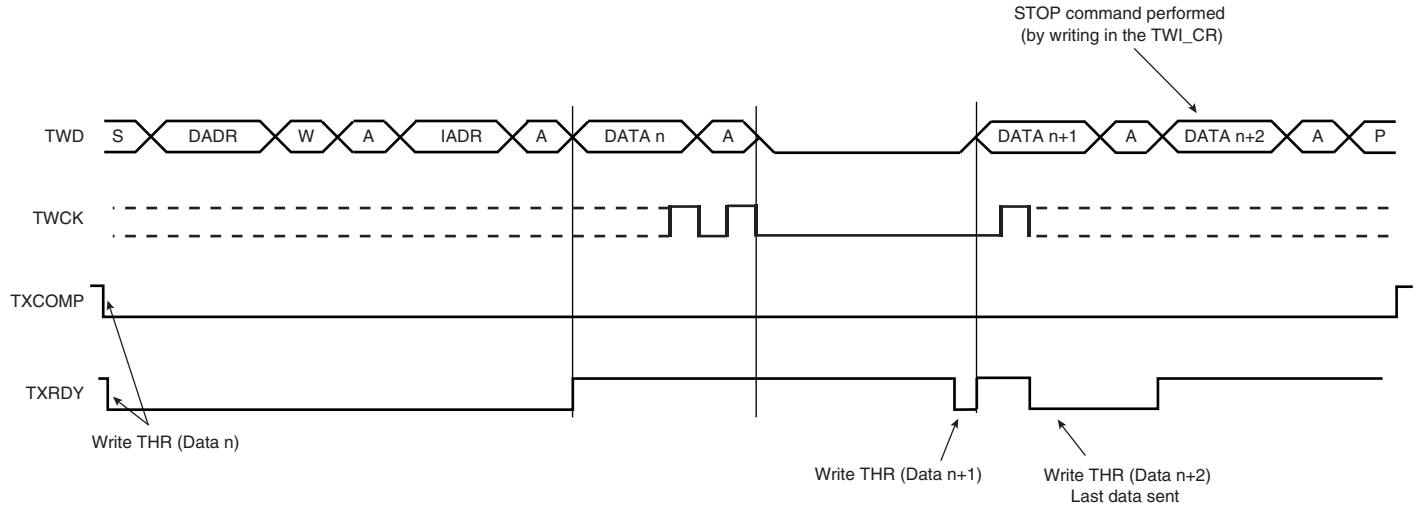

31.8.5 Master Receiver Mode

The read sequence begins by setting the START bit. After the start condition has been sent, the master sends a 7-bit slave address to notify the slave device. The bit following the slave address indicates the transfer direction, 1 in this case (MREAD = 1 in TWI_MMR). During the acknowledge clock pulse (9th pulse), the master releases the data line (HIGH), enabling the slave to pull it down in order to generate the acknowledge. The master polls the data line during this clock pulse and sets the **NACK** bit in the status register if the slave does not acknowledge the byte.

If an acknowledge is received, the master is then ready to receive data from the slave. After data has been received, the master sends an acknowledge condition to notify the slave that the data has been received except for the last data, after the stop condition. See Figure 31-9. When the RXRDY bit is set in the status register, a character has been received in the receive-holding register (TWI_RHR). The RXRDY bit is reset when reading the TWI_RHR.

When a single data byte read is performed, with or without internal address **(IADR**), the START and STOP bits must be set at the same time. See Figure 31-9. When a multiple data byte read is performed, with or without internal address **(IADR**), the STOP bit must be set after the next-to-last data received. See Figure 31-10. For Internal Address usage see Section 31.8.6.

Figure 31-9. Master Read with One Data Byte

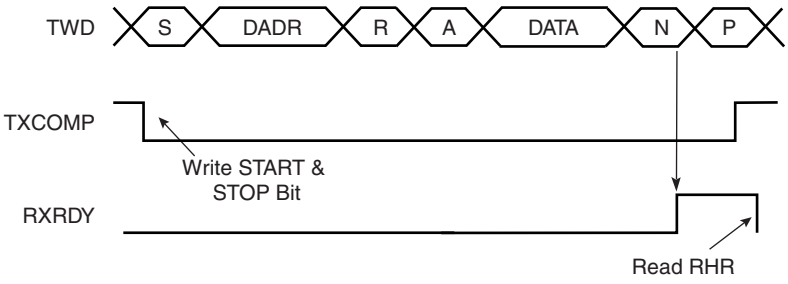

Figure 31-10. Master Read with Multiple Data Bytes

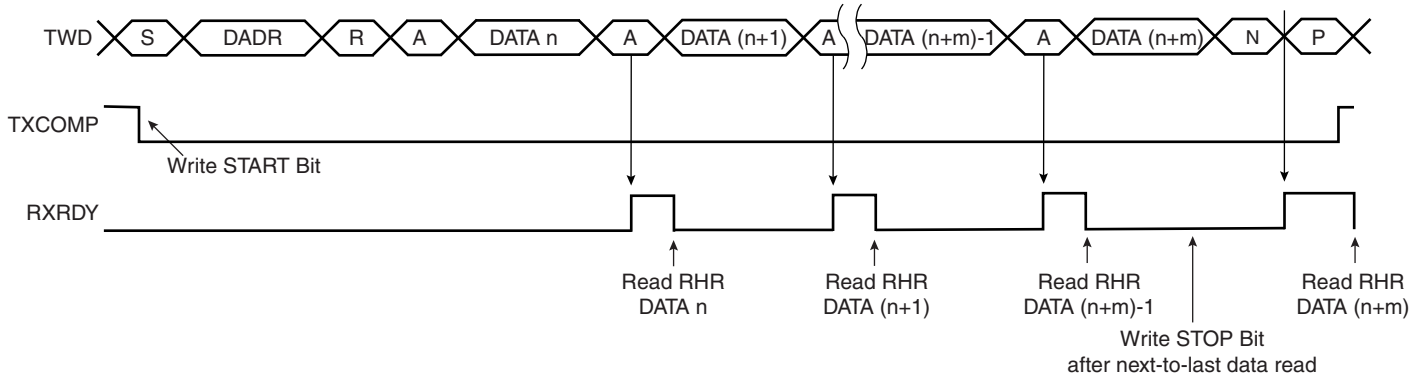

31.8.6 Internal Address

The TWI interface can perform various transfer formats: Transfers with 7-bit slave address devices and 10-bit slave address devices.

31.8.6.1 7-bit Slave Addressing

When Addressing 7-bit slave devices, the internal address bytes are used to perform random address (read or write) accesses to reach one or more data bytes, within a memory page location in a serial memory, for example. When performing read operations with an internal address, the TWI performs a write operation to set the internal address into the slave device, and then switch to Master Receiver mode. Note that the second start condition (after sending the IADR) is sometimes called “repeated start” (Sr) in I^2C fully-compatible devices. See Figure 31-12. See Figure 31-11 and Figure 31-13 for Master Write operation with internal address.

The three internal address bytes are configurable through the Master Mode register (TWI_MMR).

If the slave device supports only a 7-bit address, i.e. no internal address, **IADRSZ** must be set to 0.

In the figures below the following abbreviations are used:

- S Start
- Sr Repeated Start
- P Stop
- W Write
- R Read
- A Acknowledge
- N Not Acknowledge
- DADR Device Address
- IADR Internal Address

Figure 31-11. Master Write with One, Two or Three Bytes Internal Address and One Data Byte

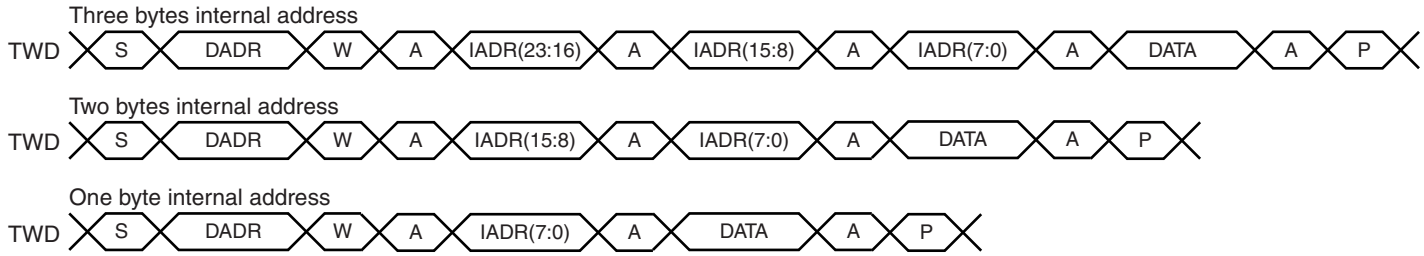

Figure 31-12. Master Read with One, Two or Three Bytes Internal Address and One Data Byte

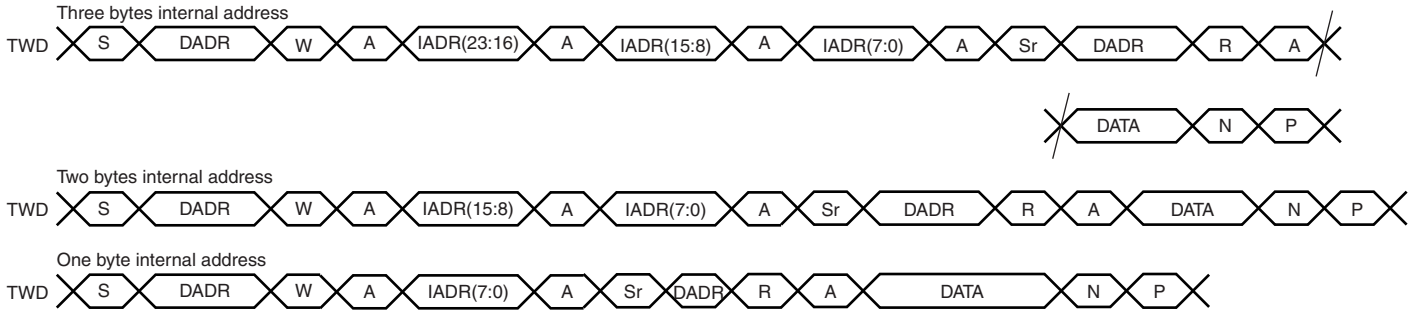

31.8.6.2 10-bit Slave Addressing

For a slave address higher than 7 bits, the user must configure the address size **(IADRSZ**) and set the other slave address bits in the internal address register (TWI_IADR). The two remaining Internal address bytes, IADR[15:8] and IADR[23:16] can be used the same as in 7-bit Slave Addressing.

Example: Address a 10-bit device (10-bit device address is b1 b2 b3 b4 b5 b6 b7 b8 b9 b10)

1. Program IADRSZ = 1,
2. Program DADR with 1 1 1 1 0 b1 b2 (b1 is the MSB of the 10-bit address, b2, etc.)
3. Program TWI_IADR with b3 b4 b5 b6 b7 b8 b9 b10 (b10 is the LSB of the 10-bit address)

Figure 31-13 below shows a byte write to an Atmel AT24LC512 EEPROM. This demonstrates the use of internal addresses to access the device.

Figure 31-13. Internal Address Usage

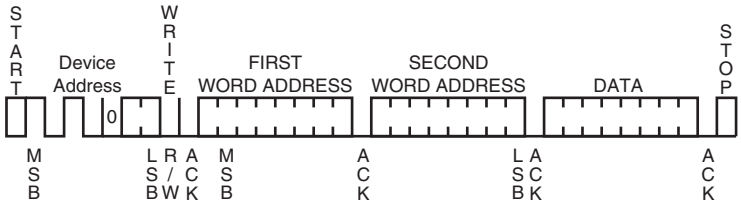

31.8.7 SMBUS Quick Command (Master Mode Only)

The TWI interface can perform a Quick Command:

1. Configure the master mode (DADR, CKDIV, etc.).
2. Write the MREAD bit in the TWI_MMR register at the value of the one-bit command to be sent.
3. Start the transfer by setting the QUICK bit in the TWI_CR.

Figure 31-14. SMBUS Quick Command

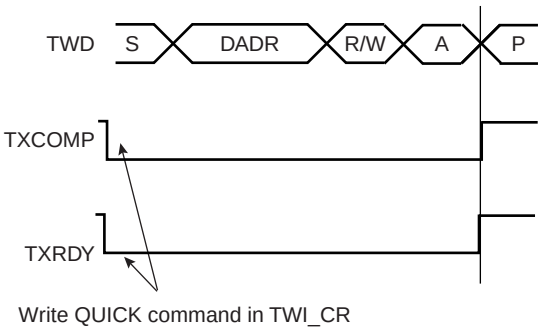

31.8.8 Read-write Flowcharts

The following flowcharts shown in Figure 31-16 on page 480, Figure 31-17 on page 481, Figure 31-18 on page 482, Figure 31-19 on page 483 and Figure 31-20 on page 484 give examples for read and write operations. A polling or interrupt method can be used to check the status bits. The interrupt method requires that the interrupt enable register (TWI_IER) be configured first.

Figure 31-15. TWI Write Operation with Single Data Byte without Internal Address

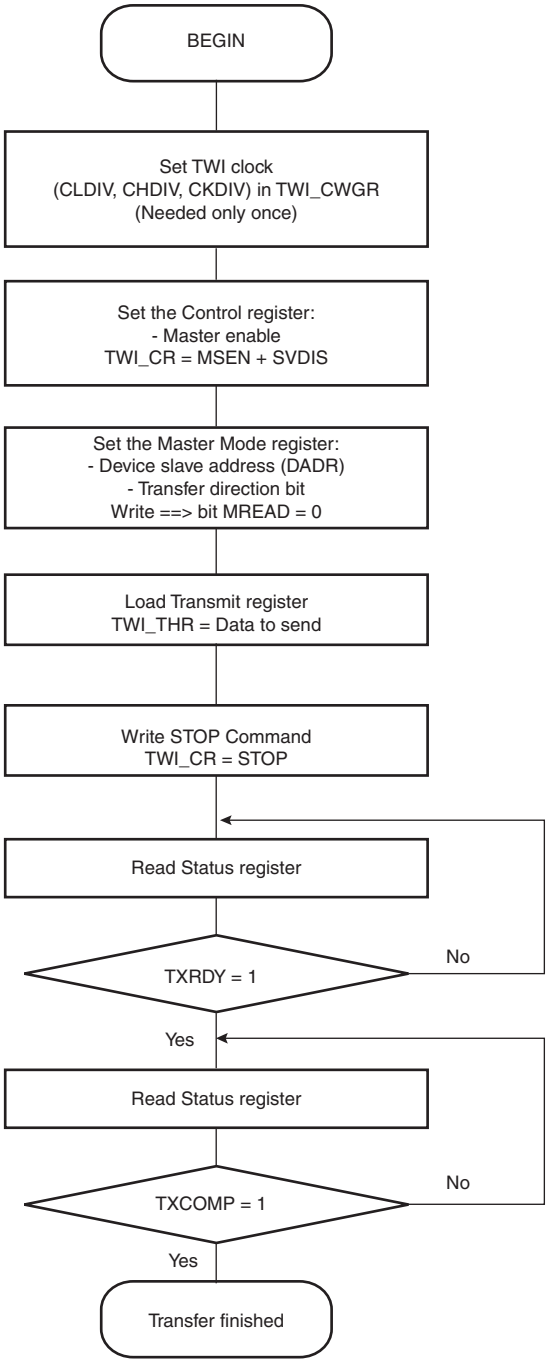

Figure 31-16. TWI Write Operation with Single Data Byte and Internal Address

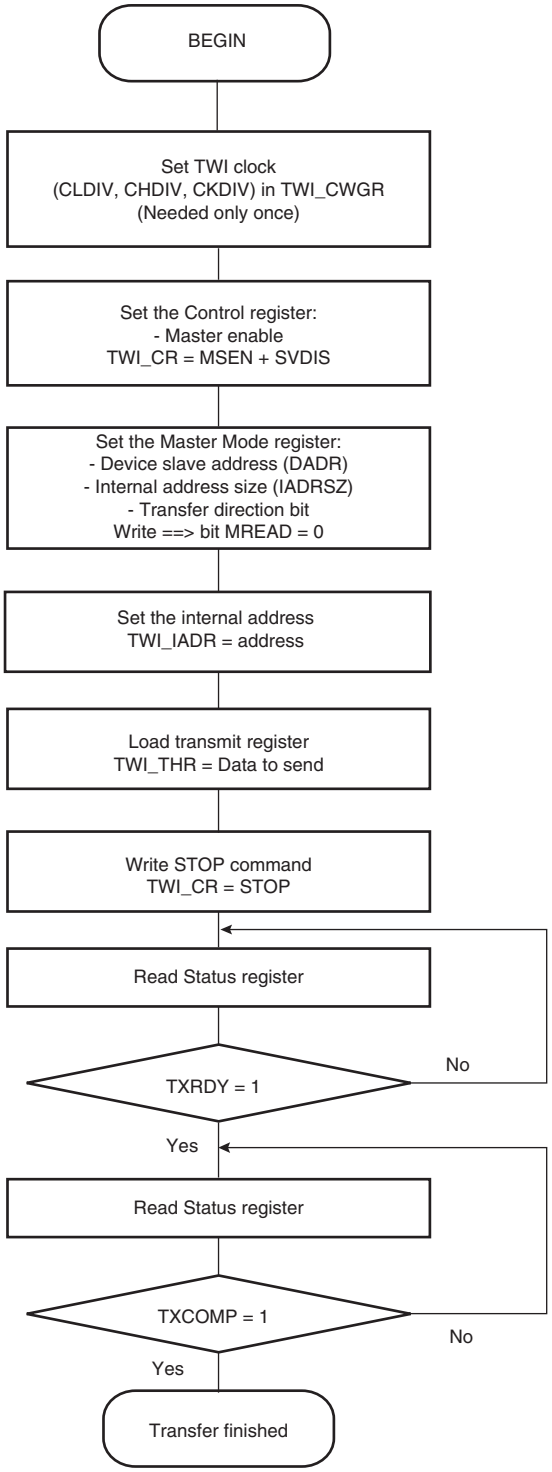

Figure 31-17. TWI Write Operation with Multiple Data Bytes with or without Internal Address

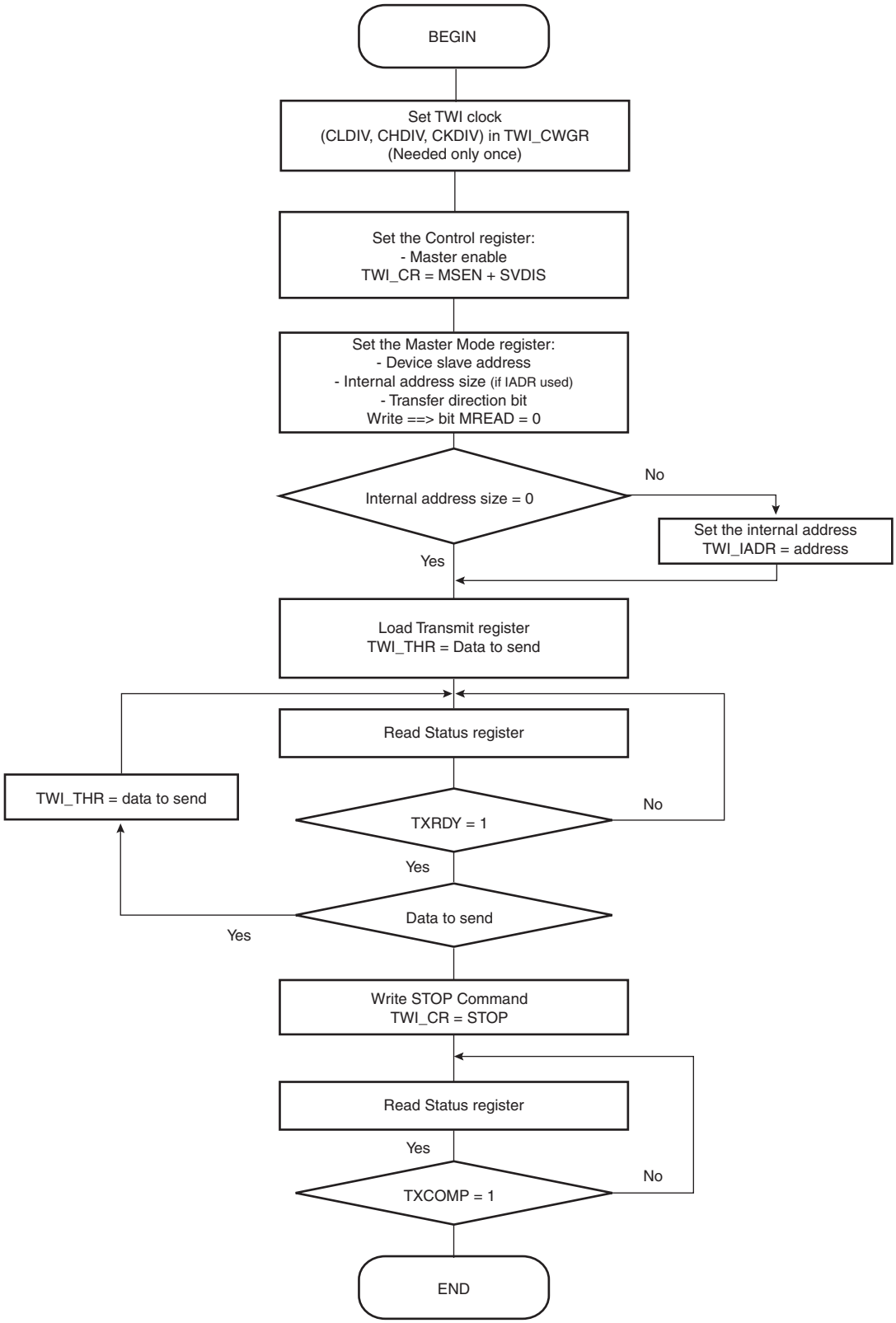

Figure 31-18. TWI Read Operation with Single Data Byte without Internal Address

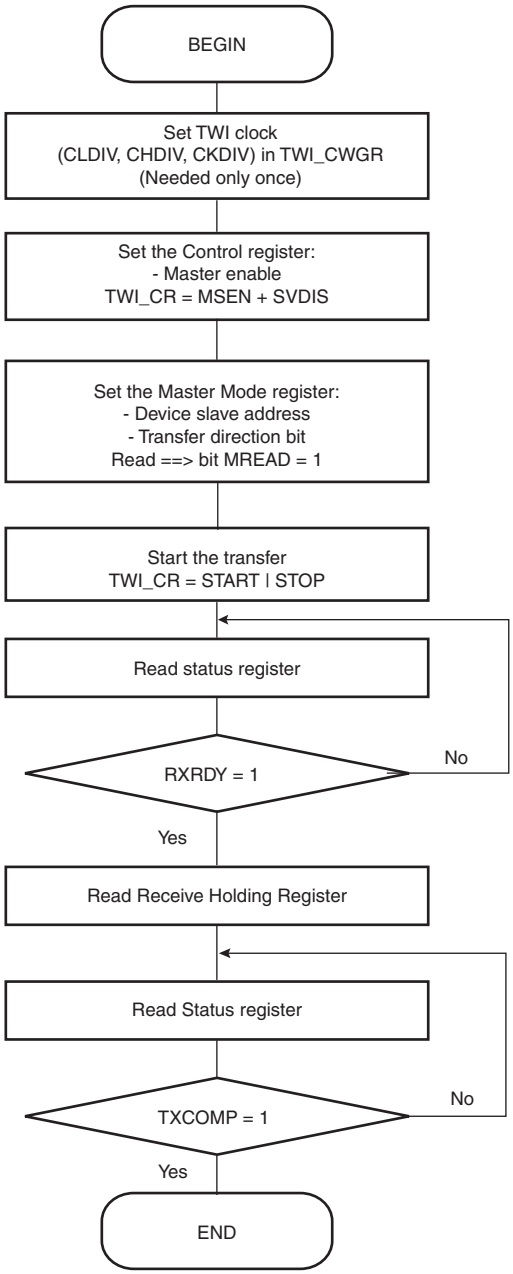

Figure 31-19. TWI Read Operation with Single Data Byte and Internal Address

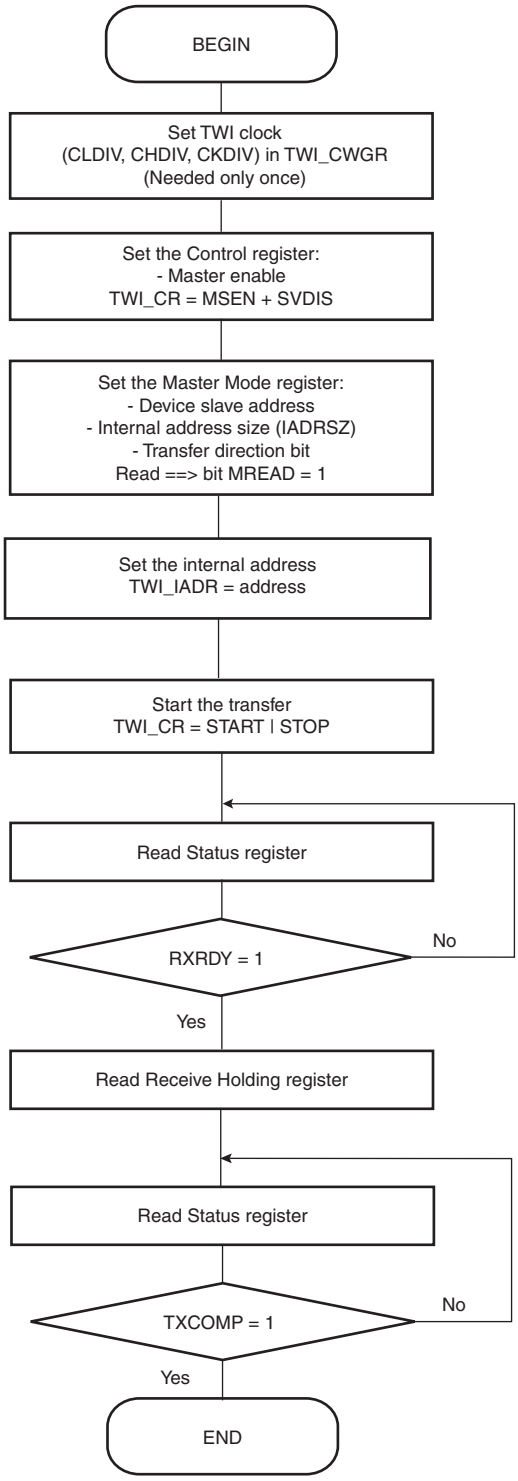

Figure 31-20. TWI Read Operation with Multiple Data Bytes with or without Internal Address

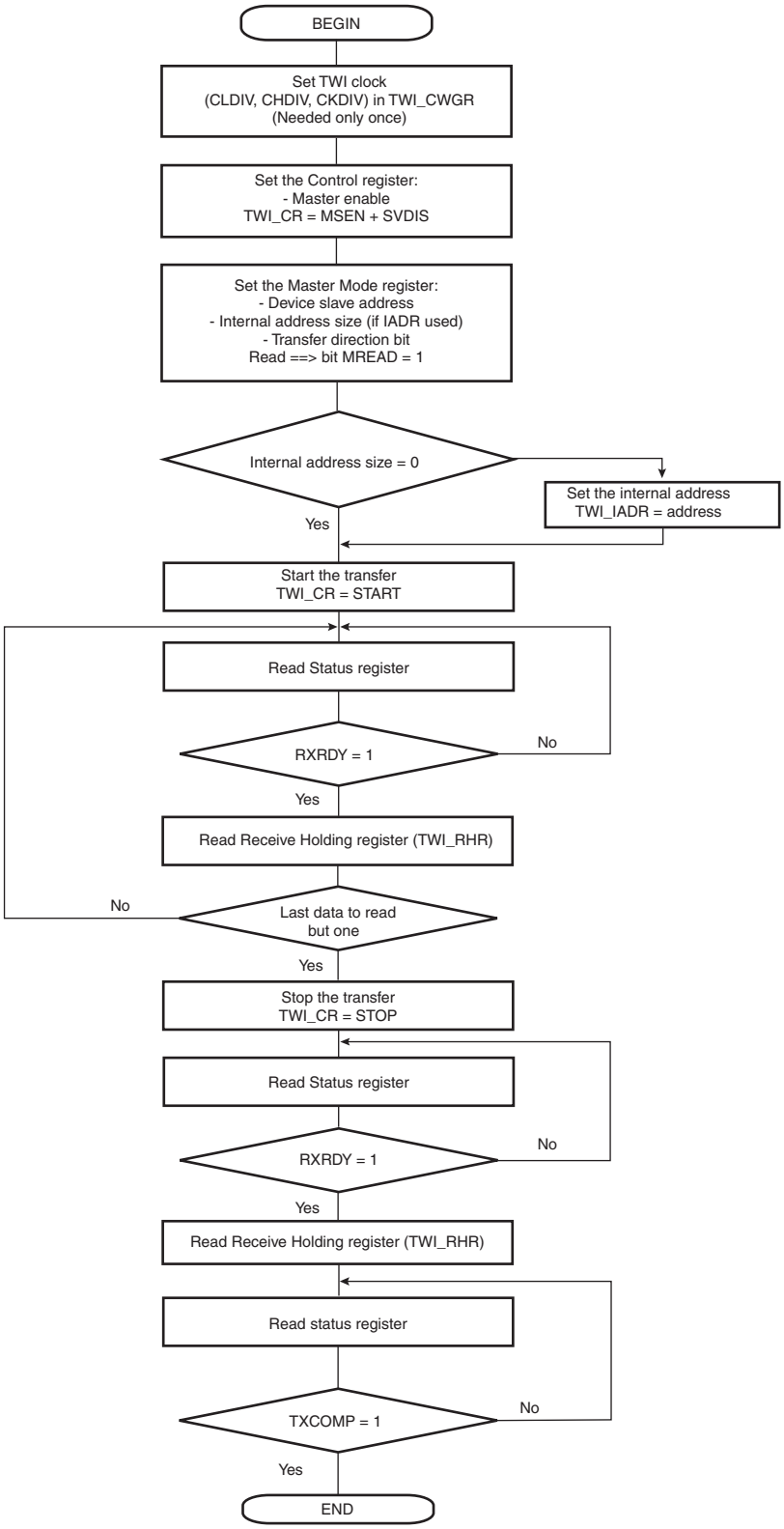

31.9 Multi-master Mode

31.9.1 Definition

More than one master may handle the bus at the same time without data corruption by using arbitration.

Arbitration starts as soon as two or more masters place information on the bus at the same time, and stops (arbitration is lost) for the master that intends to send a logical one while the other master sends a logical zero.

As soon as arbitration is lost by a master, it stops sending data and listens to the bus in order to detect a stop. When the stop is detected, the master who has lost arbitration may put its data on the bus by respecting arbitration.

Arbitration is illustrated in Figure 31-22 on page 486.

31.9.2 Different Multi-master Modes

Two multi-master modes may be distinguished:

1. TWI is considered as a Master only and will never be addressed.
2. TWI may be either a Master or a Slave and may be addressed.

Note: In both Multi-master modes arbitration is supported.

31.9.2.1 TWI as Master Only

In this mode, TWI is considered as a Master only (MSEN is always at one) and must be driven like a Master with the ARBLST (ARBitration Lost) flag in addition.

If arbitration is lost (ARBLST = 1), the programmer must reinitiate the data transfer.

If the user starts a transfer (ex.: DADR + START + W + Write in THR) and if the bus is busy, the TWI automatically waits for a STOP condition on the bus to initiate the transfer (see Figure 31-21 on page 486).

Note: The state of the bus (busy or free) is not indicated in the user interface.

31.9.2.2 TWI as Master or Slave

The automatic reversal from Master to Slave is not supported in case of a lost arbitration.

Then, in the case where TWI may be either a Master or a Slave, the programmer must manage the pseudo Multi-master mode described in the steps below.

1. Program TWI in Slave mode (SADR + MSDIS + SVEN) and perform Slave Access (if TWI is addressed).
2. If TWI has to be set in Master mode, wait until TXCOMP flag is at 1.
3. Program Master mode (DADR + SVDIS + MSEN) and start the transfer (ex: START + Write in THR).
4. As soon as the Master mode is enabled, TWI scans the bus in order to detect if it is busy or free. When the bus is considered as free, TWI initiates the transfer.
5. As soon as the transfer is initiated and until a STOP condition is sent, the arbitration becomes relevant and the user must monitor the ARBLST flag.
6. If the arbitration is lost (ARBLST is set to 1), the user must program the TWI in Slave mode in the case where the Master that won the arbitration wanted to access the TWI.
7. If TWI has to be set in Slave mode, wait until TXCOMP flag is at 1 and then program the Slave mode.

Note: In the case where the arbitration is lost and TWI is addressed, TWI will not acknowledge even if it is programmed in Slave mode as soon as ARBLST is set to 1. Then, the Master must repeat SADR.

Figure 31-21. Programmer Sends Data While the Bus is Busy

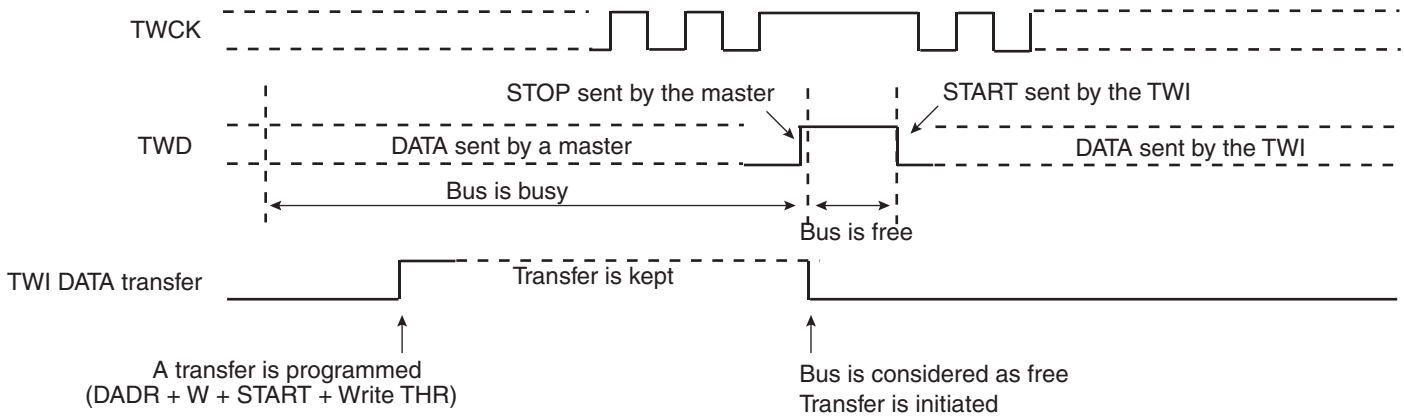

Figure 31-22. Arbitration Cases

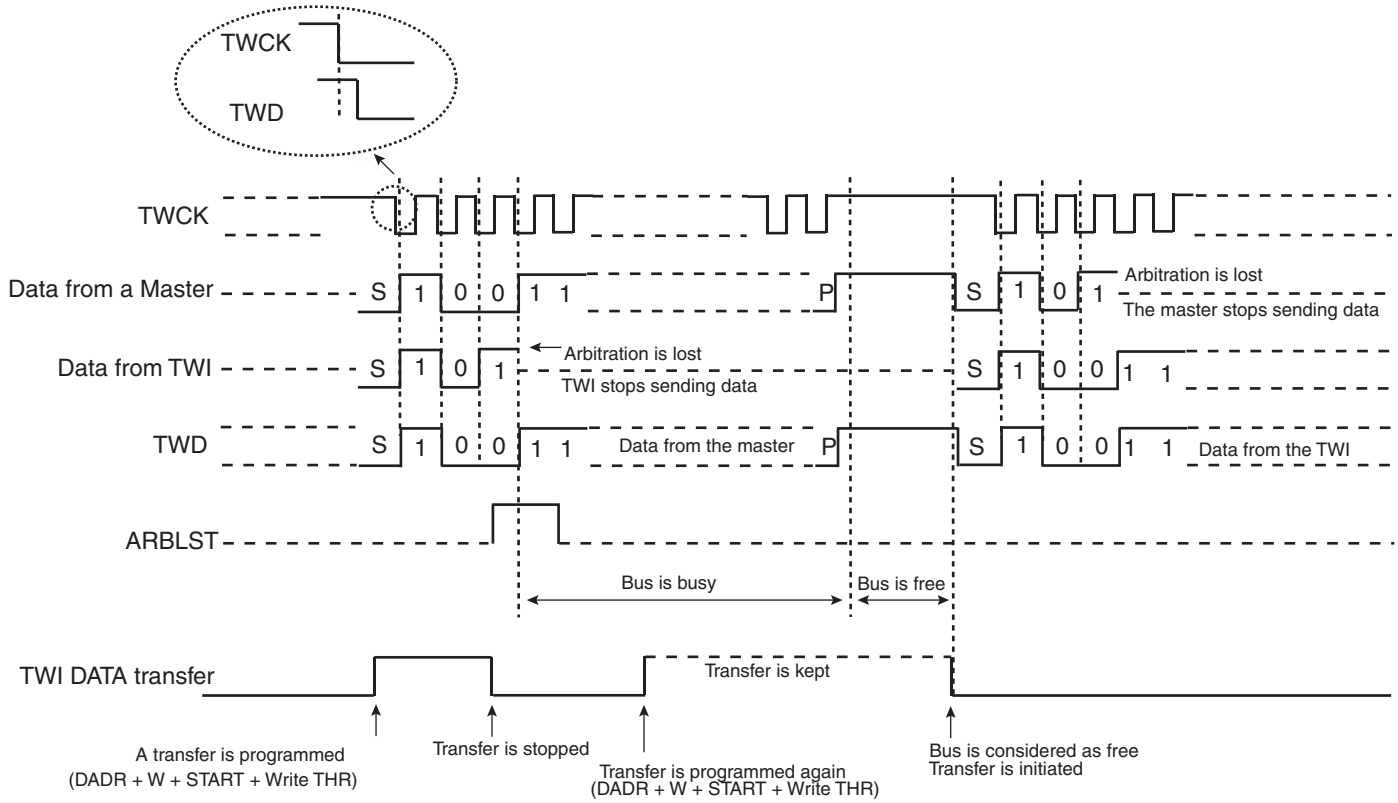

The flowchart shown in Figure 31-23 on page 487 gives an example of read and write operations in Multi-master mode.

Figure 31-23. Multi-master Flowchart

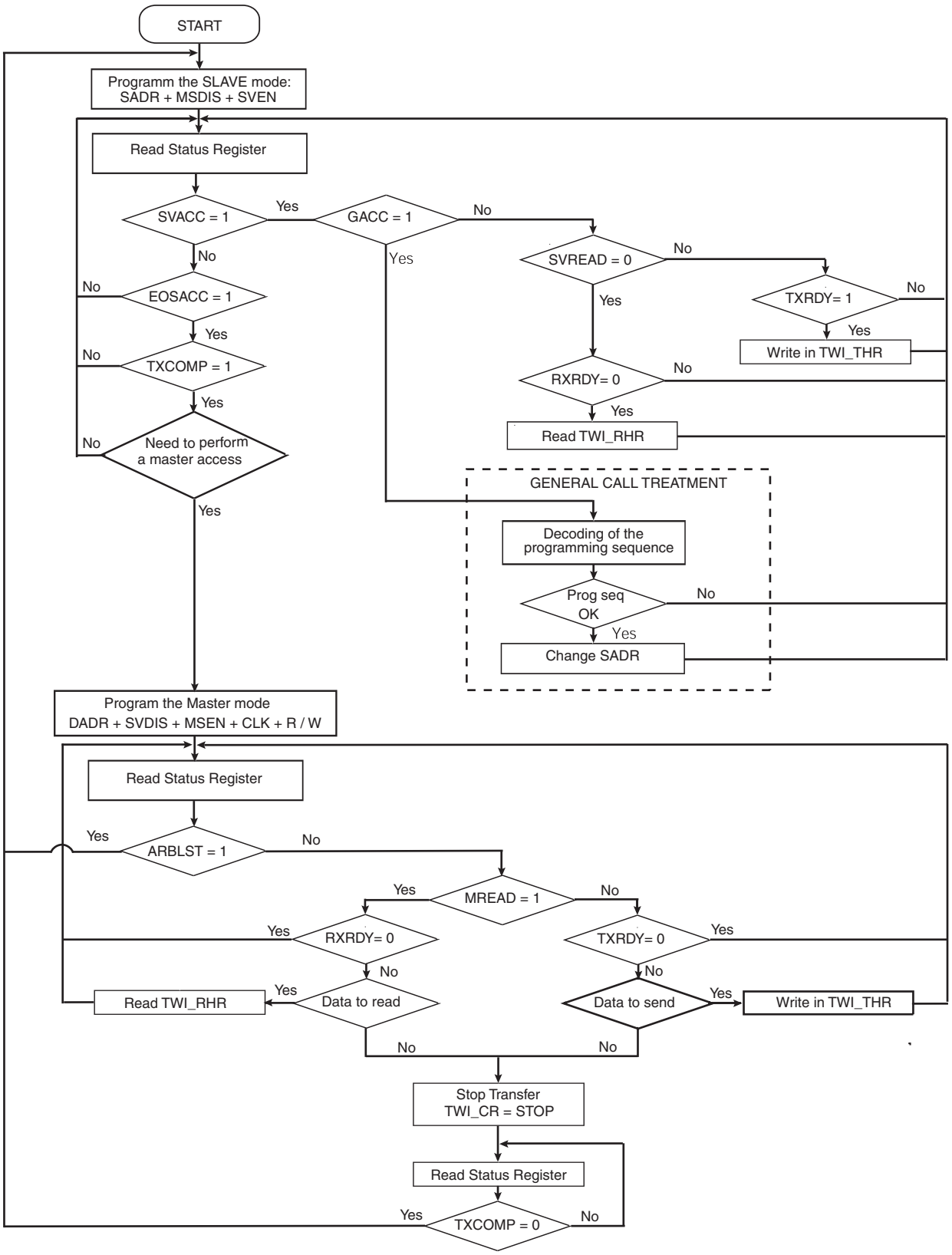

31.10 Slave Mode

31.10.1 Definition

The Slave Mode is defined as a mode where the device receives the clock and the address from another device called the master.

In this mode, the device never initiates and never completes the transmission (START, REPEATED_START and STOP conditions are always provided by the master).

31.10.2 Application Block Diagram

Figure 31-24. Slave Mode Typical Application Block Diagram

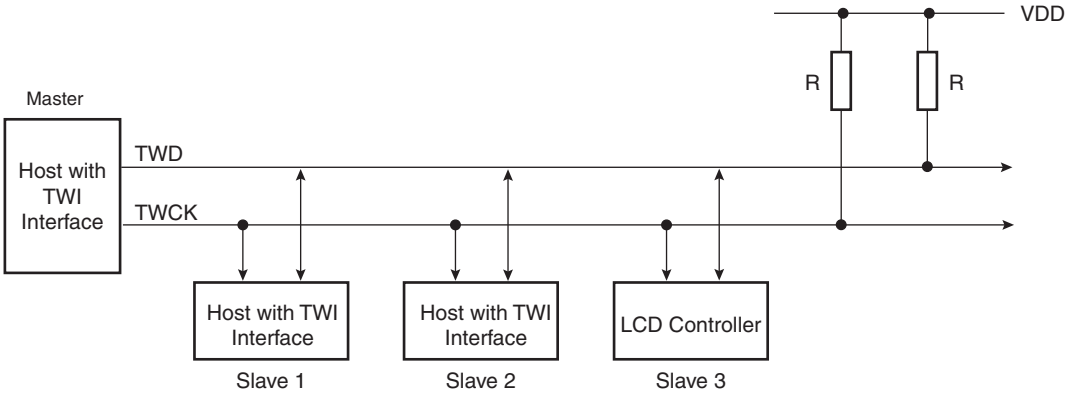

31.10.3 Programming Slave Mode

The following fields must be programmed before entering Slave mode:

1. SADR (TWI_SMR): The slave device address is used in order to be accessed by master devices in read or write mode.
2. MSDIS (TWI_CR): Disable the master mode.
3. SVEN (TWI_CR): Enable the slave mode.

As the device receives the clock, values written in TWI_CWGR are not taken into account.

31.10.4 Receiving Data

After a Start or Repeated Start condition is detected and if the address sent by the Master matches with the Slave address programmed in the SADR (Slave ADdress) field, SVACC (Slave ACCess) flag is set and SVREAD (Slave READ) indicates the direction of the transfer.

SVACC remains high until a STOP condition or a repeated START is detected. When such a condition is detected, EOSACC (End Of Slave ACCess) flag is set.

31.10.4.1 Read Sequence

In the case of a Read sequence (SVREAD is high), TWI transfers data written in the TWI_THR (TWI Transmit Holding Register) until a STOP condition or a REPEATED_START + an address different from SADR is detected. Note that at the end of the read sequence TXCOMP (Transmission Complete) flag is set and SVACC reset.

As soon as data is written in the TWI_THR, TXRDY (Transmit Holding Register Ready) flag is reset, and it is set when the shift register is empty and the sent data acknowledged or not. If the data is not acknowledged, the NACK flag is set.

Note that a STOP or a repeated START always follows a NACK.

See Figure 31-25 on page 489.

31.10.4.2 Write Sequence

In the case of a Write sequence (SVREAD is low), the RXRDY (Receive Holding Register Ready) flag is set as soon as a character has been received in the TWI_RHR (TWI Receive Holding Register). RXRDY is reset when reading the TWI_RHR.

TWI continues receiving data until a STOP condition or a REPEATED_START + an address different from SADR is detected. Note that at the end of the write sequence TXCOMP flag is set and SVACC reset.

See Figure 31-26 on page 490.

31.10.4.3 Clock Synchronization Sequence

In the case where TWI_THR or TWI_RHR is not written/read in time, TWI performs a clock synchronization.

Clock stretching information is given by the SCLWS (Clock Wait state) bit.

See Figure 31-28 on page 491 and Figure 31-29 on page 492.

31.10.4.4 General Call

In the case where a GENERAL CALL is performed, GACC (General Call ACCess) flag is set.

After GACC is set, it is up to the programmer to interpret the meaning of the GENERAL CALL and to decode the new address programming sequence.

See Figure 31-27 on page 490.

31.10.5 Data Transfer

31.10.5.1 Read Operation

The read mode is defined as a data requirement from the master.

After a START or a REPEATED START condition is detected, the decoding of the address starts. If the slave address (SADR) is decoded, SVACC is set and SVREAD indicates the direction of the transfer.

Until a STOP or REPEATED START condition is detected, TWI continues sending data loaded in the TWI_THR register.

If a STOP condition or a REPEATED START + an address different from SADR is detected, SVACC is reset.

Figure 31-25 on page 489 describes the write operation.

Figure 31-25. Read Access Ordered by a MASTER

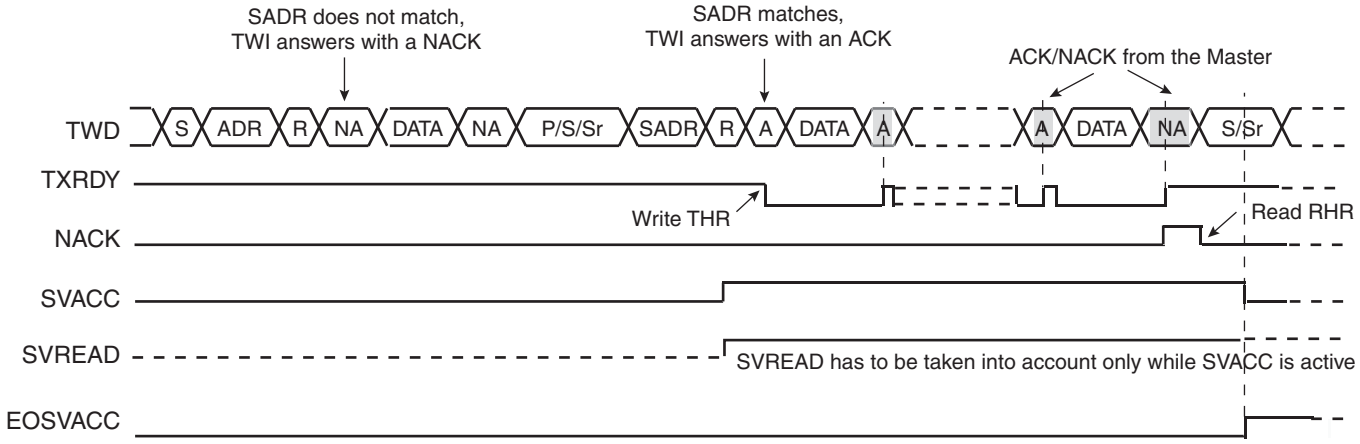

Notes: 1. When SVACC is low, the state of SVREAD becomes irrelevant.

2. TXRDY is reset when data has been transmitted from TWI_THR to the shift register and set when this data has been acknowledged or non acknowledged.

31.10.5.2 *Write Operation*

The write mode is defined as a data transmission from the master.

After a START or a REPEATED START, the decoding of the address starts. If the slave address is decoded, SVACC is set and SVREAD indicates the direction of the transfer (SVREAD is low in this case).

Until a STOP or REPEATED START condition is detected, TWI stores the received data in the TWI_RHR register.

If a STOP condition or a REPEATED START + an address different from SADR is detected, SVACC is reset.

Figure 31-26 on page 490 describes the Write operation.

Figure 31-26. Write Access Ordered by a Master

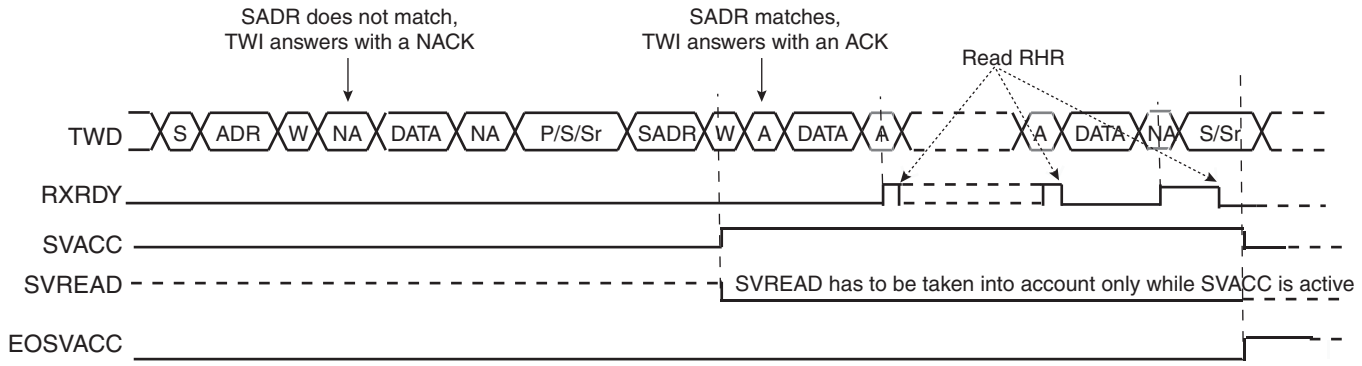

Notes: 1. When SVACC is low, the state of SVREAD becomes irrelevant.
2. RXRDY is set when data has been transmitted from the shift register to the TWI_RHR and reset when this data is read.

31.10.5.3 *General Call*

The general call is performed in order to change the address of the slave.

If a GENERAL CALL is detected, GACC is set.

After the detection of General Call, it is up to the programmer to decode the commands which come afterwards.

In case of a WRITE command, the programmer has to decode the programming sequence and program a new SADR if the programming sequence matches.

Figure 31-27 on page 490 describes the General Call access.

Figure 31-27. Master Performs a General Call

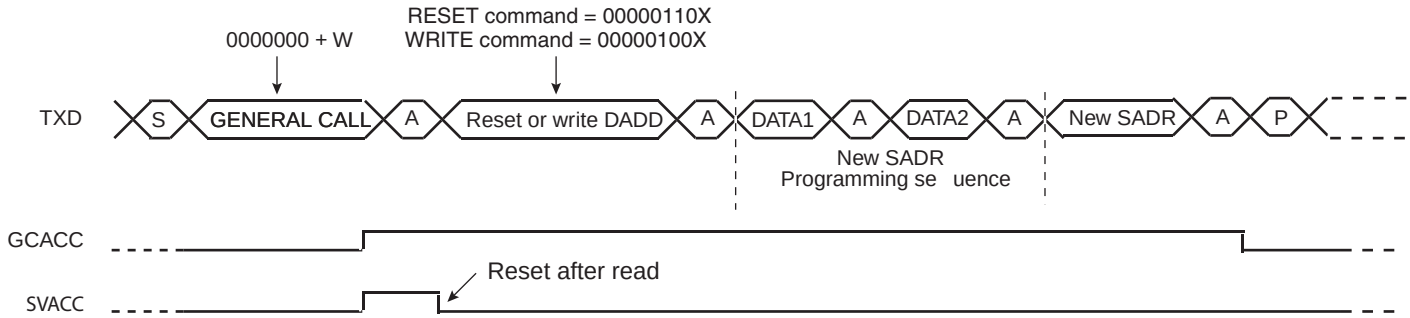

Note: This method allows the user to create an own programming sequence by choosing the programming bytes and the number of them. The programming sequence has to be provided to the master.

31.10.5.4 Clock Synchronization

In both read and write modes, it may happen that TWI_THR/TWI_RHR buffer is not filled /emptied before the emission/reception of a new character. In this case, to avoid sending/receiving undesired data, a clock stretching mechanism is implemented.

31.10.5.5 Clock Synchronization in Read Mode

The clock is tied low if the shift register is empty and if a STOP or REPEATED START condition was not detected. It is tied low until the shift register is loaded.

Figure 31-28 on page 491 describes the clock synchronization in Read mode.

Figure 31-28. Clock Synchronization in Read Mode

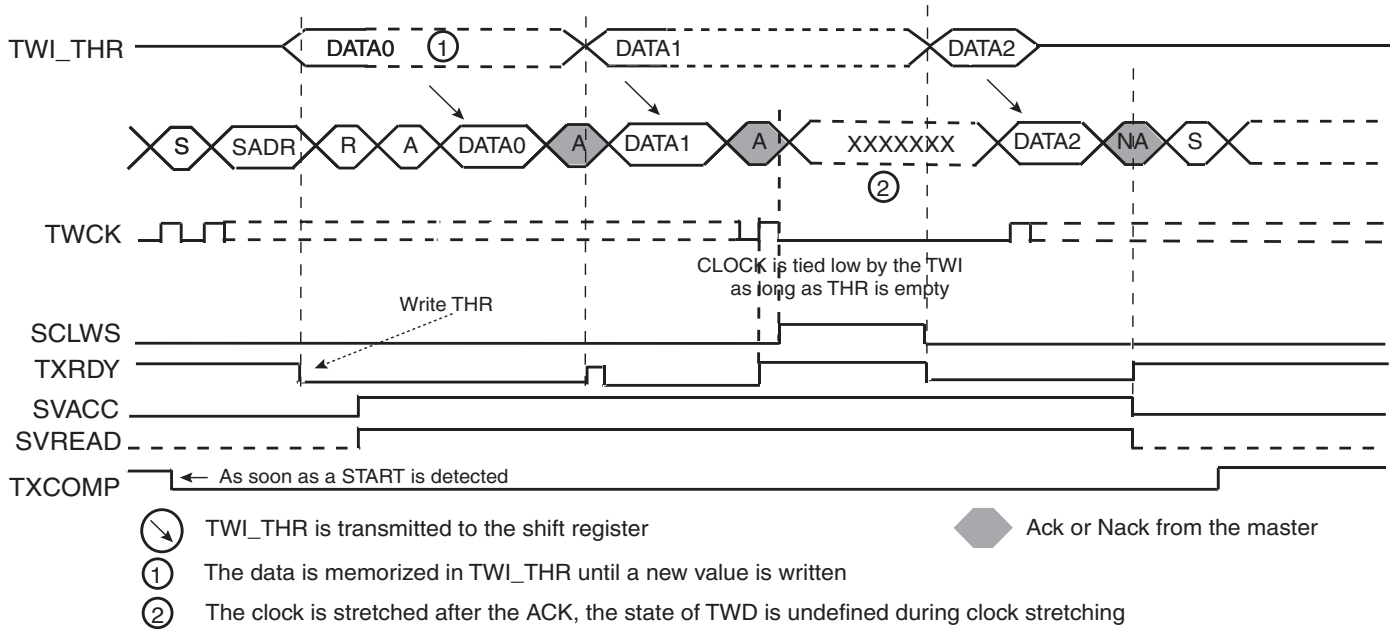

Notes:
1. TXRDY is reset when data has been written in the TWI_THR to the shift register and set when this data has been acknowledged or non acknowledged.
2. At the end of the read sequence, TXCOMP is set after a STOP or after a REPEATED_START + an address different from SADR.
3. SCLWS is automatically set when the clock synchronization mechanism is started.

31.10.5.6 *Clock Synchronization in Write Mode*

The clock is tied low if the shift register and the TWI_RHR is full. If a STOP or REPEATED_START condition was not detected, it is tied low until TWI_RHR is read.

Figure 31-29 on page 492 describes the clock synchronization in Read mode.

Figure 31-29. Clock Synchronization in Write Mode

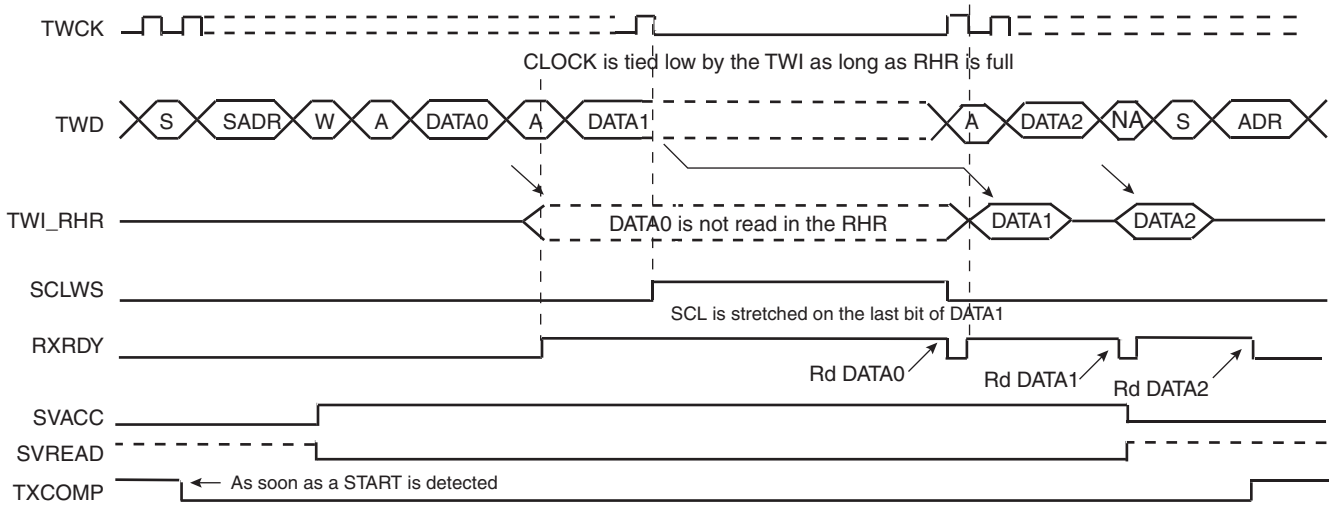

Notes:
1. At the end of the read sequence, TXCOMP is set after a STOP or after a REPEATED_START + an address different from SADR.
2. SCLWS is automatically set when the clock synchronization mechanism is started and automatically reset when the mechanism is finished.

31.10.5.7 Reversal after a Repeated Start

31.10.5.8 Reversal of Read to Write

The master initiates the communication by a read command and finishes it by a write command.

Figure 31-30 on page 493 describes the repeated start + reversal from Read to Write mode.

Figure 31-30. Repeated Start + Reversal from Read to Write Mode

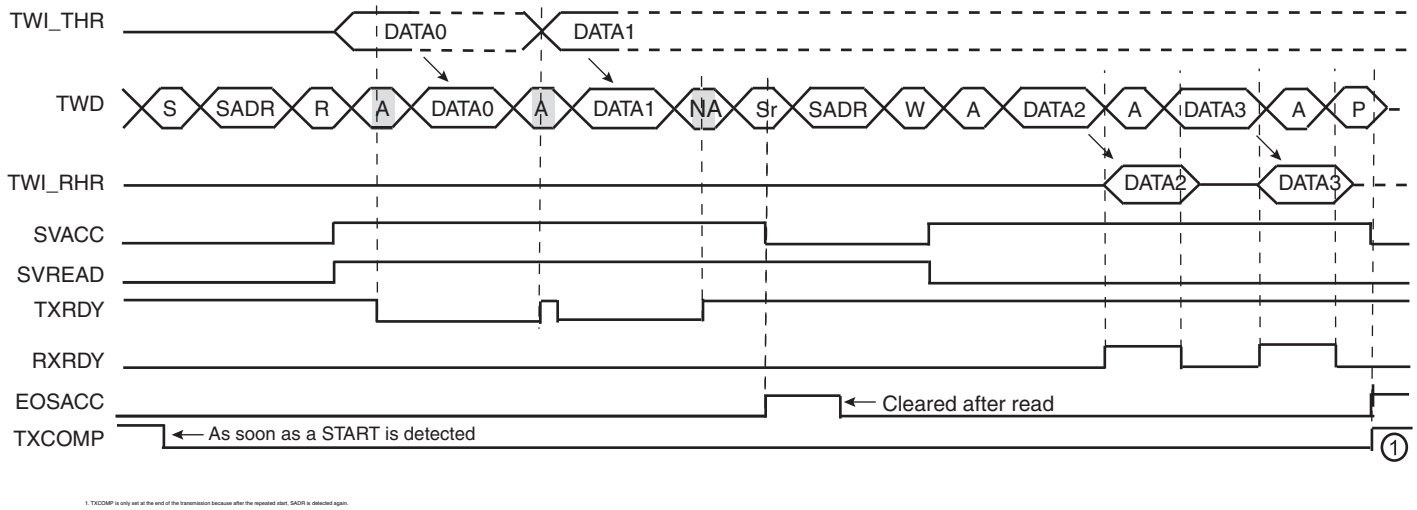

1. TXCOMP is only set at the end of the transmission because after the repeated start, SADR is detected again.

31.10.5.9 Reversal of Write to Read

The master initiates the communication by a write command and finishes it by a read command.Figure 31-31 on page 493 describes the repeated start + reversal from Write to Read mode.

Figure 31-31. Repeated Start + Reversal from Write to Read Mode

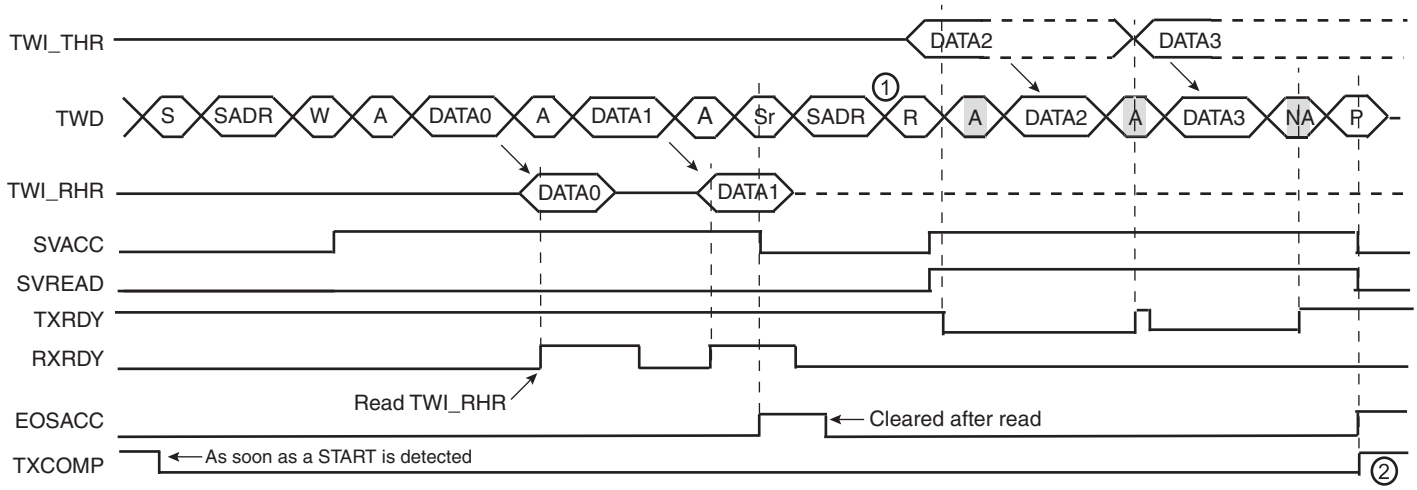

Notes: 1. In this case, if TWI_THR has not been written at the end of the read command, the clock is automatically stretched before the ACK.

2. TXCOMP is only set at the end of the transmission because after the repeated start, SADR is detected again.

31.10.6 Read Write Flowcharts

The flowchart shown in Figure 31-32 on page 494 gives an example of read and write operations in Slave mode. A polling or interrupt method can be used to check the status bits. The interrupt method requires that the interrupt enable register (TWI_IER) be configured first.

Figure 31-32. Read Write Flowchart in Slave Mode

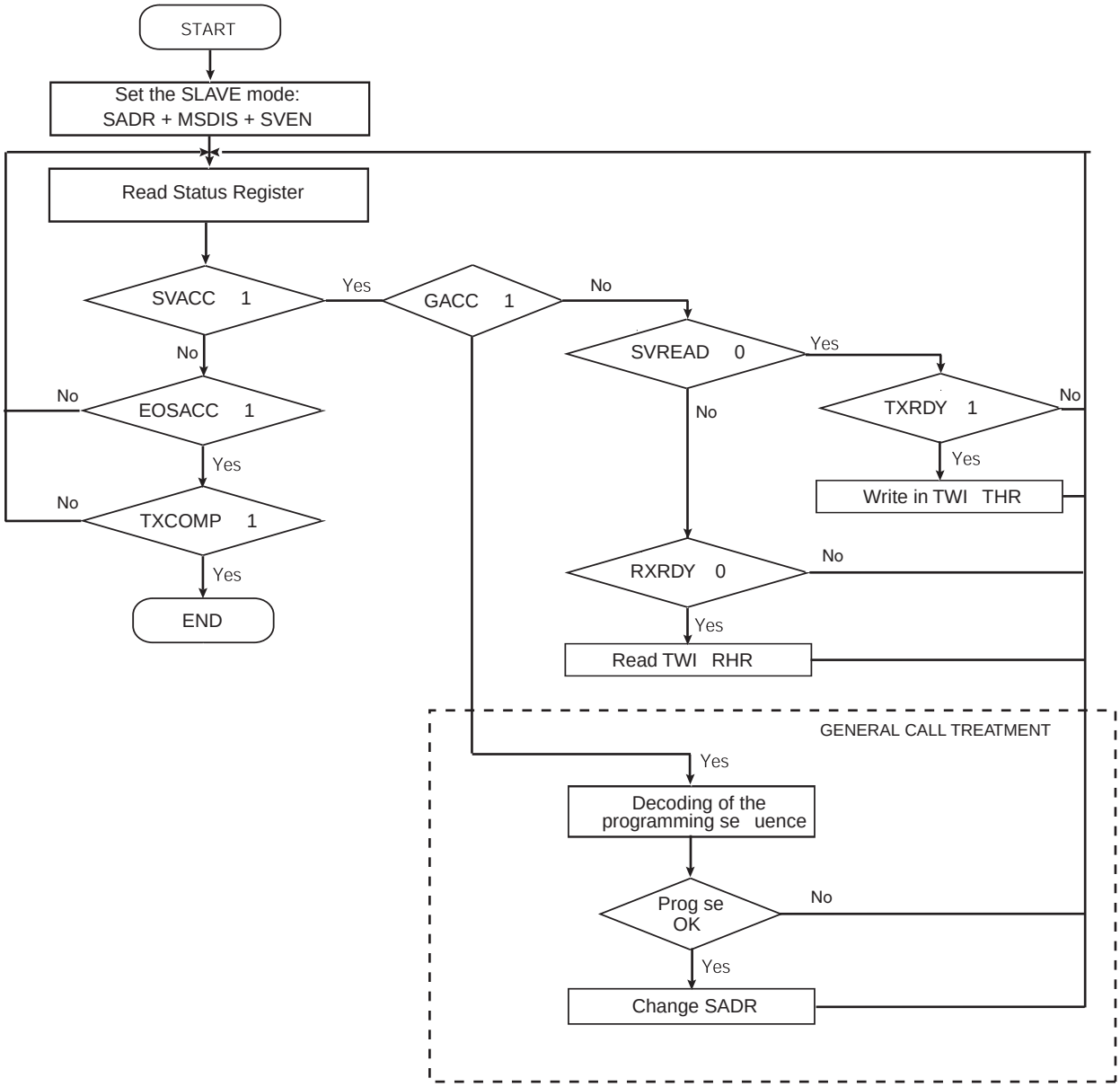

31.11 Two-wire Interface (TWI) User Interface

Table 31-6. Register Mapping

Offset	Register	Name	Access	Reset
0x00	Control Register	TWI_CR	Write-only	N / A
0x04	Master Mode Register	TWI_MMR	Read-write	0x00000000
0x08	Slave Mode Register	TWI_SMR	Read-write	0x00000000
0x0C	Internal Address Register	TWI_IADR	Read-write	0x00000000
0x10	Clock Waveform Generator Register	TWI_CWGR	Read-write	0x00000000
0x20	Status Register	TWI_SR	Read-only	0x0000F009
0x24	Interrupt Enable Register	TWI_IER	Write-only	N / A
0x28	Interrupt Disable Register	TWI_IDR	Write-only	N / A
0x2C	Interrupt Mask Register	TWI_IMR	Read-only	0x00000000
0x30	Receive Holding Register	TWI_RHR	Read-only	0x00000000
0x34	Transmit Holding Register	TWI_THR	Write-only	0x00000000
0x38 - 0xFC	Reserved	–	–	–
		–	–	–

31.11.1 TWI Control Register

Name: TWI_CR

Addresses: 0xFFF84000 (0), 0xFFF88000 (1)

Access: Write-only

Reset: 0x00000000

31	30	29	28	27	26	25	24
–	–	–	–	–	–	–	–

23	22	21	20	19	18	17	16
–	–	–	–	–	–	–	–

15	14	13	12	11	10	9	8
–	–	–	–	–	–	–	–

7	6	5	4	3	2	1	0
SWRST	QUICK	SVDIS	SVEN	MSDIS	MSEN	STOP	START

- **START: Send a START Condition**

0 = No effect.

1 = A frame beginning with a START bit is transmitted according to the features defined in the mode register.

This action is necessary when the TWI peripheral wants to read data from a slave. When configured in Master Mode with a write operation, a frame is sent as soon as the user writes a character in the Transmit Holding Register (TWI_THR).

- **STOP: Send a STOP Condition**

0 = No effect.

1 = STOP Condition is sent just after completing the current byte transmission in master read mode.

– In single data byte master read, the START and STOP must both be set.
– In multiple data bytes master read, the STOP must be set after the last data received but one.
– In master read mode, if a NACK bit is received, the STOP is automatically performed.
– In master data write operation, a STOP condition will be sent after the transmission of the current data is finished.

- **MSEN: TWI Master Mode Enabled**

0 = No effect.

1 = If MSDIS = 0, the master mode is enabled.

Note: Switching from Slave to Master mode is only permitted when TXCOMP = 1.

- **MSDIS: TWI Master Mode Disabled**

0 = No effect.

1 = The master mode is disabled, all pending data is transmitted. The shifter and holding characters (if it contains data) are transmitted in case of write operation. In read operation, the character being transferred must be completely received before disabling.

- **SVEN: TWI Slave Mode Enabled**

0 = No effect.

1 = If SVDIS = 0, the slave mode is enabled.

Note: Switching from Master to Slave mode is only permitted when TXCOMP = 1.

- **SVDIS: TWI Slave Mode Disabled**

0 = No effect.

1 = The slave mode is disabled. The shifter and holding characters (if it contains data) are transmitted in case of read operation. In write operation, the character being transferred must be completely received before disabling.

- **QUICK: SMBUS Quick Command**

0 = No effect.

1 = If Master mode is enabled, a SMBUS Quick Command is sent.

- **SWRST: Software Reset**

0 = No effect.

1 = Equivalent to a system reset.

31.11.2 TWI Master Mode Register

Name: TWI_MMR

Addresses: 0xFFF84004 (0), 0xFFF88004 (1)

Access: Read-write

Reset: 0x00000000

31	30	29	28	27	26	25	24
–	–	–	–	–	–	–	–

23	22	21	20	19	18	17	16
–	DADR						

15	14	13	12	11	10	9	8
–	–	–	MREAD	–	–	IADRSZ	

7	6	5	4	3	2	1	0
–	–	–	–	–	–	–	–

- **IADRSZ: Internal Device Address Size**

IADRSZ[9:8]		
0	0	No internal device address
0	1	One-byte internal device address
1	0	Two-byte internal device address
1	1	Three-byte internal device address

- **MREAD: Master Read Direction**

0 = Master write direction.

1 = Master read direction.

- **DADR: Device Address**

The device address is used to access slave devices in read or write mode. Those bits are only used in Master mode.

31.11.3 TWI Slave Mode Register

Name: TWI_SMR

Addresses: 0xFFF84008 (0), 0xFFF88008 (1)

Access: Read-write

Reset: 0x00000000

31	30	29	28	27	26	25	24
–	–	–	–	–	–	–	–

23	22	21	20	19	18	17	16
–	SADR						

15	14	13	12	11	10	9	8
–	–	–	–	–	–		

7	6	5	4	3	2	1	0
–	–	–	–	–	–	–	–

- **SADR: Slave Address**

The slave device address is used in Slave mode in order to be accessed by master devices in read or write mode.

SADR must be programmed before enabling the Slave mode or after a general call. Writes at other times have no effect.

31.11.4 TWI Internal Address Register

Name: TWI_IADR

Addresses: 0xFFF8400C (0), 0xFFF8800C (1)

Access: Read-write

Reset: 0x00000000

31	30	29	28	27	26	25	24
–	–	–	–	–	–	–	–

23	22	21	20	19	18	17	16
IADR							

15	14	13	12	11	10	9	8
IADR							

7	6	5	4	3	2	1	0
IADR							

- **IADR: Internal Address**

0, 1, 2 or 3 bytes depending on IADRSZ.

31.11.5 TWI Clock Waveform Generator Register

Name: TWI_CWGR

Addresses: 0xFFF84010 (0), 0xFFF88010 (1)

Access: Read-write

Reset: 0x00000000

31	30	29	28	27	26	25	24
–	–	–	–	–	–	–	–

23	22	21	20	19	18	17	16
					CKDIV		

15	14	13	12	11	10	9	8
CHDIV							

7	6	5	4	3	2	1	0
CLDIV							

TWI_CWGR is only used in Master mode.

- **CLDIV: Clock Low Divider**

The SCL low period is defined as follows:

$$T_{low} = ((\text{CLDIV} \times 2^{\text{CKDIV}}) + 4) \times T_{MCK}$$

- **CHDIV: Clock High Divider**

The SCL high period is defined as follows:

$$T_{high} = ((\text{CHDIV} \times 2^{\text{CKDIV}}) + 4) \times T_{MCK}$$

- **CKDIV: Clock Divider**

The CKDIV is used to increase both SCL high and low periods.

31.11.6 TWI Status Register

Name: TWI_SR

Addresses: 0xFFF84020 (0), 0xFFF88020 (1)

Access: Read-only

Reset: 0x0000F009

31	30	29	28	27	26	25	24
–	–	–	–	–	–	–	–

23	22	21	20	19	18	17	16
–	–	–	–	–	–	–	–

15	14	13	12	11	10	9	8
				EOSACC	SCLWS	ARBLST	NACK

7	6	5	4	3	2	1	0
–	OVRE	GACC	SVACC	SVREAD	TXRDY	RXRDY	TXCOMP

- **TXCOMP: Transmission Completed (automatically set / reset)**

TXCOMP used in Master mode:

0 = During the length of the current frame.

1 = When both holding and shifter registers are empty and STOP condition has been sent.

TXCOMP behavior in Master mode can be seen in Figure 31-8 on page 475 and in Figure 31-10 on page 476.

TXCOMP used in Slave mode:

0 = As soon as a Start is detected.

1 = After a Stop or a Repeated Start + an address different from SADR is detected.

TXCOMP behavior in Slave mode can be seen in Figure 31-28 on page 491, Figure 31-29 on page 492, Figure 31-30 on page 493 and Figure 31-31 on page 493.

- **RXRDY: Receive Holding Register Ready (automatically set / reset)**

0 = No character has been received since the last TWI_RHR read operation.

1 = A byte has been received in the TWI_RHR since the last read.

RXRDY behavior in Master mode can be seen in Figure 31-10 on page 476.

RXRDY behavior in Slave mode can be seen in Figure 31-26 on page 490, Figure 31-29 on page 492, Figure 31-30 on page 493 and Figure 31-31 on page 493.

- **TXRDY: Transmit Holding Register Ready (automatically set / reset)**

TXRDY used in Master mode:

0 = The transmit holding register has not been transferred into shift register. Set to 0 when writing into TWI_THR register.

1 = As soon as a data byte is transferred from TWI_THR to internal shifter or if a NACK error is detected, TXRDY is set at the same time as TXCOMP and NACK. TXRDY is also set when MSEN is set (enable TWI).

TXRDY behavior in Master mode can be seen in Figure 31-8 on page 475.

TXRDY used in Slave mode:

0 = As soon as data is written in the TWI_THR, until this data has been transmitted and acknowledged (ACK or NACK).

1 = It indicates that the TWI_THR is empty and that data has been transmitted and acknowledged.

If TXRDY is high and if a NACK has been detected, the transmission will be stopped. Thus when TRDY = NACK = 1, the programmer must not fill TWI_THR to avoid losing it.

TXRDY behavior in Slave mode can be seen in Figure 31-25 on page 489, Figure 31-28 on page 491, Figure 31-30 on page 493 and Figure 31-31 on page 493.

- **SVREAD: Slave Read (automatically set / reset)**

This bit is only used in Slave mode. When SVACC is low (no Slave access has been detected) SVREAD is irrelevant.

0 = Indicates that a write access is performed by a Master.

1 = Indicates that a read access is performed by a Master.

SVREAD behavior can be seen in Figure 31-25 on page 489, Figure 31-26 on page 490, Figure 31-30 on page 493 and Figure 31-31 on page 493.

- **SVACC: Slave Access (automatically set / reset)**

This bit is only used in Slave mode.

0 = TWI is not addressed. SVACC is automatically cleared after a NACK or a STOP condition is detected.

1 = Indicates that the address decoding sequence has matched (A Master has sent SADR). SVACC remains high until a NACK or a STOP condition is detected.

SVACC behavior can be seen in Figure 31-25 on page 489, Figure 31-26 on page 490, Figure 31-30 on page 493 and Figure 31-31 on page 493.

- **GACC: General Call Access (clear on read)**

This bit is only used in Slave mode.

0 = No General Call has been detected.

1 = A General Call has been detected. After the detection of General Call, if need be, the programmer may acknowledge this access and decode the following bytes and respond according to the value of the bytes.

GACC behavior can be seen in Figure 31-27 on page 490.

- **OVRE: Overrun Error (clear on read)**

This bit is only used in Master mode.

0 = TWI_RHR has not been loaded while RXRDY was set

1 = TWI_RHR has been loaded while RXRDY was set. Reset by read in TWI_SR when TXCOMP is set.

- **NACK: Not Acknowledged (clear on read)**

<u>NACK used in Master mode</u>:

0 = Each data byte has been correctly received by the far-end side TWI slave component.

1 = A data byte has not been acknowledged by the slave component. Set at the same time as TXCOMP.

<u>NACK used in Slave Read mode</u>:

0 = Each data byte has been correctly received by the Master.

1 = In read mode, a data byte has not been acknowledged by the Master. When NACK is set the programmer must not fill TWI_THR even if TXRDY is set, because it means that the Master will stop the data transfer or re initiate it.

Note that in Slave Write mode all data are acknowledged by the TWI.

- **ARBLST: Arbitration Lost (clear on read)**

This bit is only used in Master mode.

0: Arbitration won.

1: Arbitration lost. Another master of the TWI bus has won the multi-master arbitration. TXCOMP is set at the same time.

- **SCLWS: Clock Wait State (automatically set / reset)**

This bit is only used in Slave mode.

0 = The clock is not stretched.

1 = The clock is stretched. TWI_THR / TWI_RHR buffer is not filled / emptied before the emission / reception of a new character.

SCLWS behavior can be seen in Figure 31-28 on page 491 and Figure 31-29 on page 492.

- **EOSACC: End Of Slave Access (clear on read)**

This bit is only used in Slave mode.

0 = A slave access is being performing.

1 = The Slave Access is finished. End Of Slave Access is automatically set as soon as SVACC is reset.

EOSACC behavior can be seen in Figure 31-30 on page 493 and Figure 31-31 on page 493

31.11.7 TWI Interrupt Enable Register

Name: TWI_IER

Addresses: 0xFFF84024 (0), 0xFFF88024 (1)

Access: Write-only

Reset: 0x00000000

31	30	29	28	27	26	25	24
–	–	–	–	–	–	–	–

23	22	21	20	19	18	17	16
–	–	–	–	–	–	–	–

15	14	13	12	11	10	9	8
				EOSACC	SCL_WS	ARBLST	NACK

7	6	5	4	3	2	1	0
–	OVRE	GACC	SVACC	–	TXRDY	RXRDY	TXCOMP

- **TXCOMP: Transmission Completed Interrupt Enable**
- **RXRDY: Receive Holding Register Ready Interrupt Enable**
- **TXRDY: Transmit Holding Register Ready Interrupt Enable**
- **SVACC: Slave Access Interrupt Enable**
- **GACC: General Call Access Interrupt Enable**
- **OVRE: Overrun Error Interrupt Enable**
- **NACK: Not Acknowledge Interrupt Enable**
- **ARBLST: Arbitration Lost Interrupt Enable**
- **SCL_WS: Clock Wait State Interrupt Enable**
- **EOSACC: End Of Slave Access Interrupt Enable**

0 = No effect.

1 = Enables the corresponding interrupt.

31.11.8 TWI Interrupt Disable Register

Name: TWI_IDR

Addresses: 0xFFF84028 (0), 0xFFF88028 (1)

Access: Write-only

Reset: 0x00000000

31	30	29	28	27	26	25	24
–	–	–	–	–	–	–	–

23	22	21	20	19	18	17	16
–	–	–	–	–	–	–	–

15	14	13	12	11	10	9	8
				EOSACC	SCL_WS	ARBLST	NACK

7	6	5	4	3	2	1	0
–	OVRE	GACC	SVACC	–	TXRDY	RXRDY	TXCOMP

- **TXCOMP: Transmission Completed Interrupt Disable**
- **RXRDY: Receive Holding Register Ready Interrupt Disable**
- **TXRDY: Transmit Holding Register Ready Interrupt Disable**
- **SVACC: Slave Access Interrupt Disable**
- **GACC: General Call Access Interrupt Disable**
- **OVRE: Overrun Error Interrupt Disable**
- **NACK: Not Acknowledge Interrupt Disable**
- **ARBLST: Arbitration Lost Interrupt Disable**
- **SCL_WS: Clock Wait State Interrupt Disable**
- **EOSACC: End Of Slave Access Interrupt Disable**

0 = No effect.

1 = Disables the corresponding interrupt.

31.11.9 TWI Interrupt Mask Register

Name: TWI_IMR

Addresses: 0xFFF8402C (0), 0xFFF8802C (1)

Access: Read-only

Reset: 0x00000000

31	30	29	28	27	26	25	24
–	–	–	–	–	–	–	–

23	22	21	20	19	18	17	16
–	–	–	–	–	–	–	–

15	14	13	12	11	10	9	8
				EOSACC	SCL_WS	ARBLST	NACK

7	6	5	4	3	2	1	0
–	OVRE	GACC	SVACC	–	TXRDY	RXRDY	TXCOMP

- **TXCOMP: Transmission Completed Interrupt Mask**
- **RXRDY: Receive Holding Register Ready Interrupt Mask**
- **TXRDY: Transmit Holding Register Ready Interrupt Mask**
- **SVACC: Slave Access Interrupt Mask**
- **GACC: General Call Access Interrupt Mask**
- **OVRE: Overrun Error Interrupt Mask**
- **NACK: Not Acknowledge Interrupt Mask**
- **ARBLST: Arbitration Lost Interrupt Mask**
- **SCL_WS: Clock Wait State Interrupt Mask**
- **EOSACC: End Of Slave Access Interrupt Mask**

0 = The corresponding interrupt is disabled.

1 = The corresponding interrupt is enabled.

31.11.10 TWI Receive Holding Register

Name: TWI_RHR

Addresses: 0xFFF84030 (0), 0xFFF88030 (1)

Access: Read-only

Reset: 0x00000000

31	30	29	28	27	26	25	24
–	–	–	–	–	–	–	–

23	22	21	20	19	18	17	16
–	–	–	–	–	–	–	–

15	14	13	12	11	10	9	8
–	–	–	–	–	–	–	–

7	6	5	4	3	2	1	0
RXDATA							

- **RXDATA: Master or Slave Receive Holding Data**

31.11.11 TWI Transmit Holding Register

Name: TWI_THR

Addresses: 0xFFF84034 (0), 0xFFF88034 (1)

Access: Read-write

Reset: 0x00000000

31	30	29	28	27	26	25	24
–	–	–	–	–	–	–	–

23	22	21	20	19	18	17	16
–	–	–	–	–	–	–	–

15	14	13	12	11	10	9	8
–	–	–	–	–	–	–	–

7	6	5	4	3	2	1	0
TXDATA							

- **TXDATA: Master or Slave Transmit Holding Data**

32. Timer Counter (TC)

32.1 Description

The Timer Counter (TC) includes three identical 16-bit Timer Counter channels.

Each channel can be independently programmed to perform a wide range of functions including frequency measurement, event counting, interval measurement, pulse generation, delay timing and pulse width modulation.

Each channel has three external clock inputs, five internal clock inputs and two multi-purpose input/output signals which can be configured by the user. Each channel drives an internal interrupt signal which can be programmed to generate processor interrupts.

The Timer Counter block has two global registers which act upon all three TC channels.

The Block Control Register allows the three channels to be started simultaneously with the same instruction.

The Block Mode Register defines the external clock inputs for each channel, allowing them to be chained.

Table 32-1 gives the assignment of the device Timer Counter clock inputs common to Timer Counter 0 to 2.

Table 32-1. Timer Counter Clock Assignment

Name	Definition
TIMER_CLOCK1	MCK/2
TIMER_CLOCK2	MCK/8
TIMER_CLOCK3	MCK/32
TIMER_CLOCK4	MCK/128
TIMER_CLOCK5[(1)]	SLCK

Note: 1. When Slow Clock is selected for Master Clock (CSS = 0 in PMC Master CLock Register), TIMER_CLOCK5 input is Master Clock, i.e., Slow CLock modified by PRES and MDIV fields.

32.2 Embedded Characteristics

- Three 16-bit Timer Counter Channels
- Wide range of functions including:
  - Frequency Measurement
  - Event Counting
  - Interval Measurement
  - Pulse Generation
  - Delay Timing
  - Pulse Width Modulation
  - Up/down Capabilities
- Each channel is user-configurable and contains:
  - Three external clock inputs
  - Five internal clock inputs
  - Two multi-purpose input/output signals
- Two global registers that act on all three TC Channels

32.3 Block Diagram

Figure 32-1. Timer Counter Block Diagram

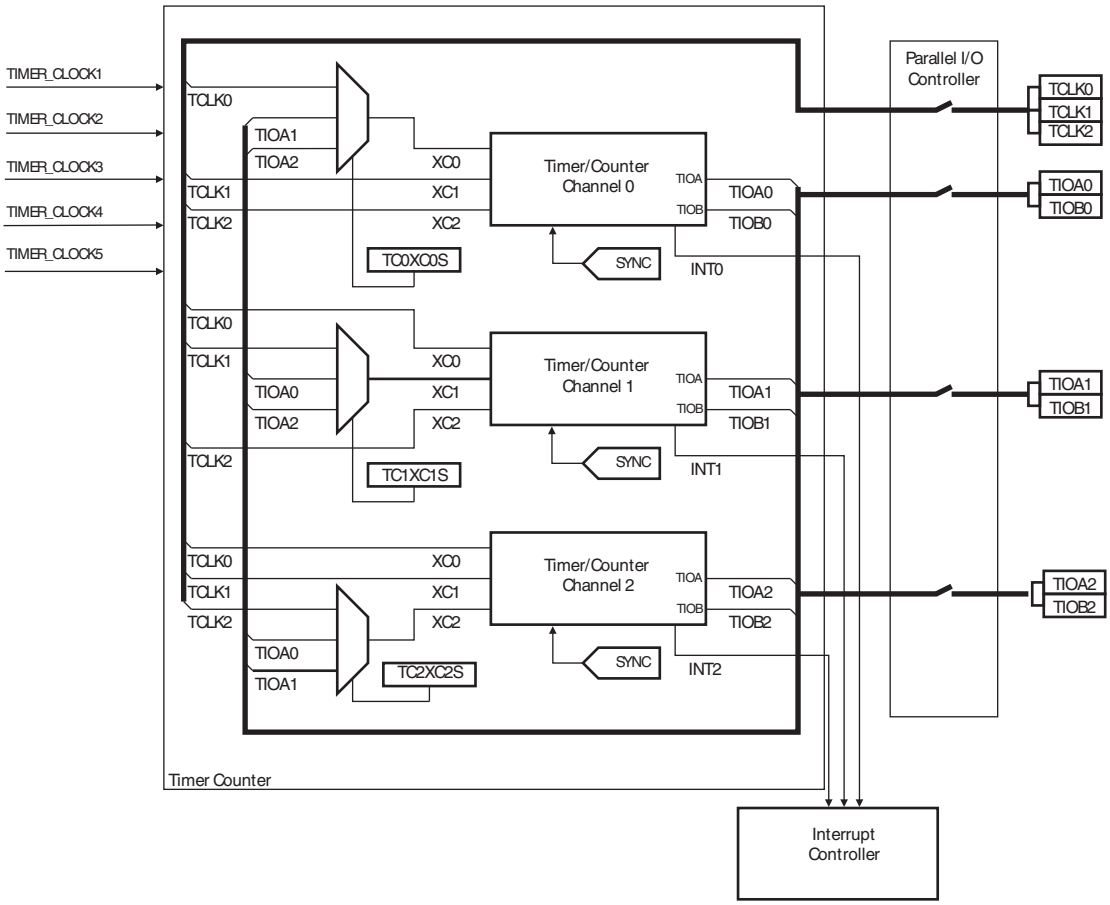

Table 32-2. Signal Name Description

Block/Channel	Signal Name	Description
Channel Signal	XC0, XC1, XC2	External Clock Inputs
	TIOA	Capture Mode: Timer Counter Input Waveform Mode: Timer Counter Output
	TIOB	Capture Mode: Timer Counter Input Waveform Mode: Timer Counter Input/Output
	INT	Interrupt Signal Output
	SYNC	Synchronization Input Signal

32.4 Pin Name List

Table 32-3. TC pin list

Pin Name	Description	Type
TCLK0-TCLK2	External Clock Input	Input
TIOA0-TIOA2	I/O Line A	I/O
TIOB0-TIOB2	I/O Line B	I/O

32.5 Product Dependencies

32.5.1 I/O Lines

The pins used for interfacing the compliant external devices may be multiplexed with PIO lines. The programmer must first program the PIO controllers to assign the TC pins to their peripheral functions.

I/O Lines

Instance	Signal	I/O Line	Peripheral
TC0	TCLK0	PD23	A
TC0	TCLK1	PD29	A
TC0	TCLK2	PC10	B
TC0	TIOA0	PD20	A
TC0	TIOA1	PD21	A
TC0	TIOA2	PD22	A
TC0	TIOB0	PD30	A
TC0	TIOB1	PD31	A
TC0	TIOB2	PA26	B
TC1	TCLK3	PA0	B
TC1	TCLK4	PA3	B
TC1	TCLK5	PD9	B
TC1	TIOA3	PA1	B
TC1	TIOA4	PA4	B

I/O Lines

TC1	TIOA5	PD7	B
TC1	TIOB3	PA2	B
TC1	TIOB4	PA5	B
TC1	TIOB5	PD8	B

32.5.2 Power Management

The TC is clocked through the Power Management Controller (PMC), thus the programmer must first configure the PMC to enable the Timer Counter clock.

32.5.3 Interrupt

The TC has an interrupt line connected to the Interrupt Controller (IC). Handling the TC interrupt requires programming the IC before configuring the TC.

32.6 Functional Description

32.6.1 TC Description

The three channels of the Timer Counter are independent and identical in operation . The registers for channel programming are listed in Table 32-4 on page 526.

32.6.2 16-bit Counter

Each channel is organized around a 16-bit counter. The value of the counter is incremented at each positive edge of the selected clock. When the counter has reached the value 0xFFFF and passes to 0x0000, an overflow occurs and the COVFS bit in TC_SR (Status Register) is set.

The current value of the counter is accessible in real time by reading the Counter Value Register, TC_CV. The counter can be reset by a trigger. In this case, the counter value passes to 0x0000 on the next valid edge of the selected clock.

32.6.3 Clock Selection

At block level, input clock signals of each channel can either be connected to the external inputs TCLK0, TCLK1 or TCLK2, or be connected to the internal I/O signals TIOA0, TIOA1 or TIOA2 for chaining by programming the TC_BMR (Block Mode). See Figure 32-2 ”Clock Chaining Selection”.

Each channel can independently select an internal or external clock source for its counter:

- Internal clock signals: TIMER_CLOCK1, TIMER_CLOCK2, TIMER_CLOCK3, TIMER_CLOCK4, TIMER_CLOCK5
- External clock signals: XC0, XC1 or XC2

This selection is made by the TCCLKS bits in the TC Channel Mode Register.

The selected clock can be inverted with the CLKI bit in TC_CMR. This allows counting on the opposite edges of the clock.

The burst function allows the clock to be validated when an external signal is high. The BURST parameter in the Mode Register defines this signal (none, XC0, XC1, XC2). See Figure 32-3 ”Clock Selection”

Note: In all cases, if an external clock is used, the duration of each of its levels must be longer than the master clock period. The external clock frequency must be at least 2.5 times lower than the master clock

Figure 32-2. Clock Chaining Selection

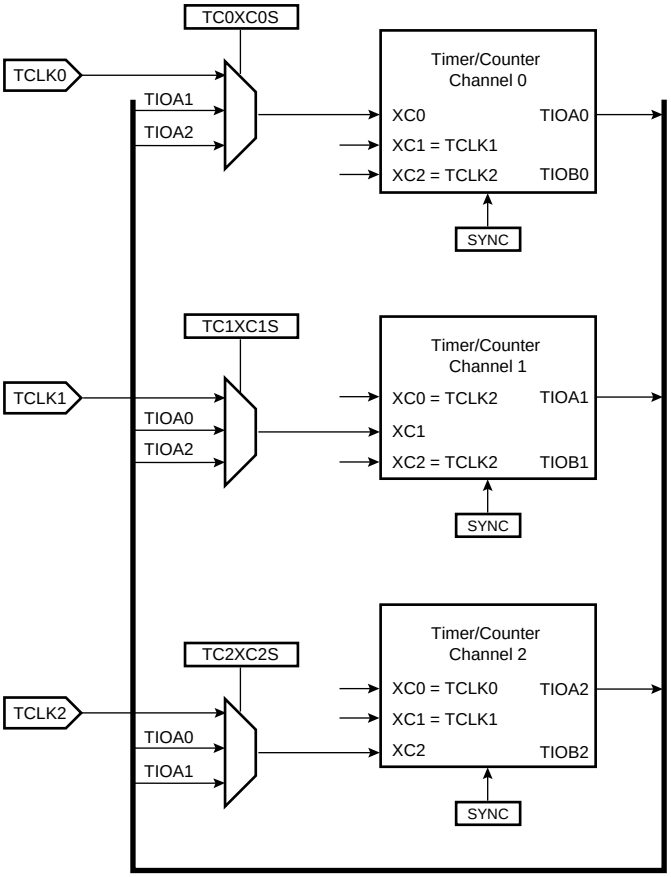

Figure 32-3. Clock Selection

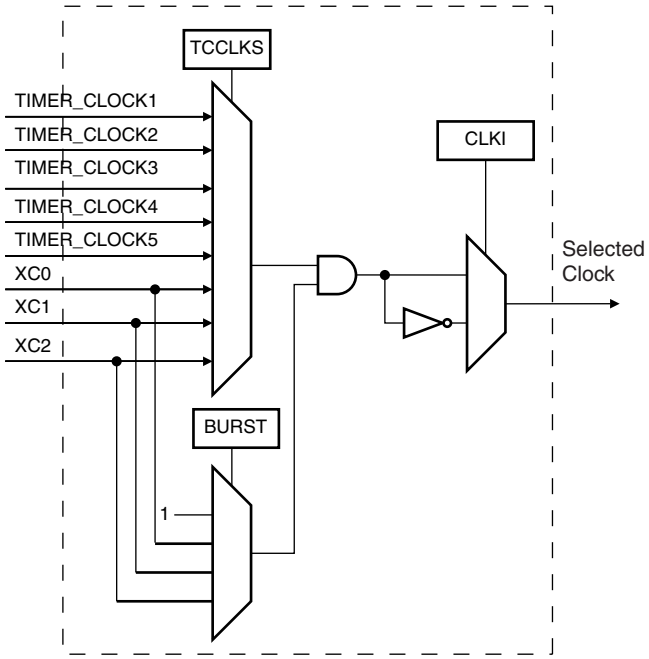

32.6.4 Clock Control

The clock of each counter can be controlled in two different ways: it can be enabled/disabled and started/stopped. See Figure 32-4.

- The clock can be enabled or disabled by the user with the CLKEN and the CLKDIS commands in the Control Register. In Capture Mode it can be disabled by an RB load event if LDBDIS is set to 1 in TC_CMR. In Waveform Mode, it can be disabled by an RC Compare event if CPCDIS is set to 1 in TC_CMR. When disabled, the start or the stop actions have no effect: only a CLKEN command in the Control Register can re-enable the clock. When the clock is enabled, the CLKSTA bit is set in the Status Register.
- The clock can also be started or stopped: a trigger (software, synchro, external or compare) always starts the clock. The clock can be stopped by an RB load event in Capture Mode (LDBSTOP = 1 in TC_CMR) or a RC compare event in Waveform Mode (CPCSTOP = 1 in TC_CMR). The start and the stop commands have effect only if the clock is enabled.

Figure 32-4. Clock Control

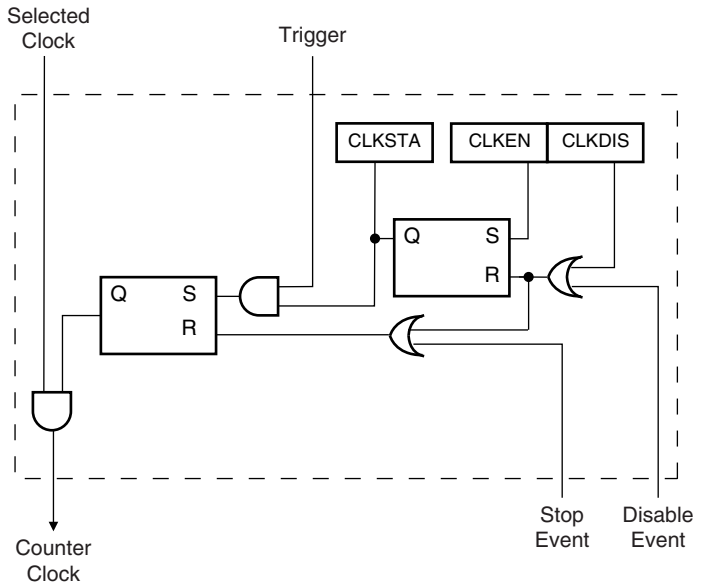

32.6.5 TC Operating Modes

Each channel can independently operate in two different modes:

- Capture Mode provides measurement on signals.
- Waveform Mode provides wave generation.

The TC Operating Mode is programmed with the WAVE bit in the TC Channel Mode Register.

In Capture Mode, TIOA and TIOB are configured as inputs.

In Waveform Mode, TIOA is always configured to be an output and TIOB is an output if it is not selected to be the external trigger.

32.6.6 Trigger

A trigger resets the counter and starts the counter clock. Three types of triggers are common to both modes, and a fourth external trigger is available to each mode.

Regardless of the trigger used, it will be taken into account at the following active edge of the selected clock. This means that the counter value can be read differently from zero just after a trigger, especially when a low frequency signal is selected as the clock.

The following triggers are common to both modes:

- Software Trigger: Each channel has a software trigger, available by setting SWTRG in TC_CCR.
- SYNC: Each channel has a synchronization signal SYNC. When asserted, this signal has the same effect as a software trigger. The SYNC signals of all channels are asserted simultaneously by writing TC_BCR (Block Control) with SYNC set.
- Compare RC Trigger: RC is implemented in each channel and can provide a trigger when the counter value matches the RC value if CPCTRG is set in TC_CMR.

The channel can also be configured to have an external trigger. In Capture Mode, the external trigger signal can be selected between TIOA and TIOB. In Waveform Mode, an external event can be programmed on one of the following signals: TIOB, XC0, XC1 or XC2. This external event can then be programmed to perform a trigger by setting ENETRG in TC_CMR.

If an external trigger is used, the duration of the pulses must be longer than the master clock period in order to be detected.

32.6.7 Capture Operating Mode

This mode is entered by clearing the WAVE parameter in TC_CMR (Channel Mode Register).

Capture Mode allows the TC channel to perform measurements such as pulse timing, frequency, period, duty cycle and phase on TIOA and TIOB signals which are considered as inputs.

Figure 32-5 shows the configuration of the TC channel when programmed in Capture Mode.

32.6.8 Capture Registers A and B

Registers A and B (RA and RB) are used as capture registers. This means that they can be loaded with the counter value when a programmable event occurs on the signal TIOA.

The LDRA parameter in TC_CMR defines the TIOA edge for the loading of register A, and the LDRB parameter defines the TIOA edge for the loading of Register B.

RA is loaded only if it has not been loaded since the last trigger or if RB has been loaded since the last loading of RA.

RB is loaded only if RA has been loaded since the last trigger or the last loading of RB.

Loading RA or RB before the read of the last value loaded sets the Overrun Error Flag (LOVRS) in TC_SR (Status Register). In this case, the old value is overwritten.

32.6.9 Trigger Conditions

In addition to the SYNC signal, the software trigger and the RC compare trigger, an external trigger can be defined.

The ABETRG bit in TC_CMR selects TIOA or TIOB input signal as an external trigger. The ETRGEDG parameter defines the edge (rising, falling or both) detected to generate an external trigger. If ETRGEDG = 0 (none), the external trigger is disabled.

Figure 32-5. Capture Mode

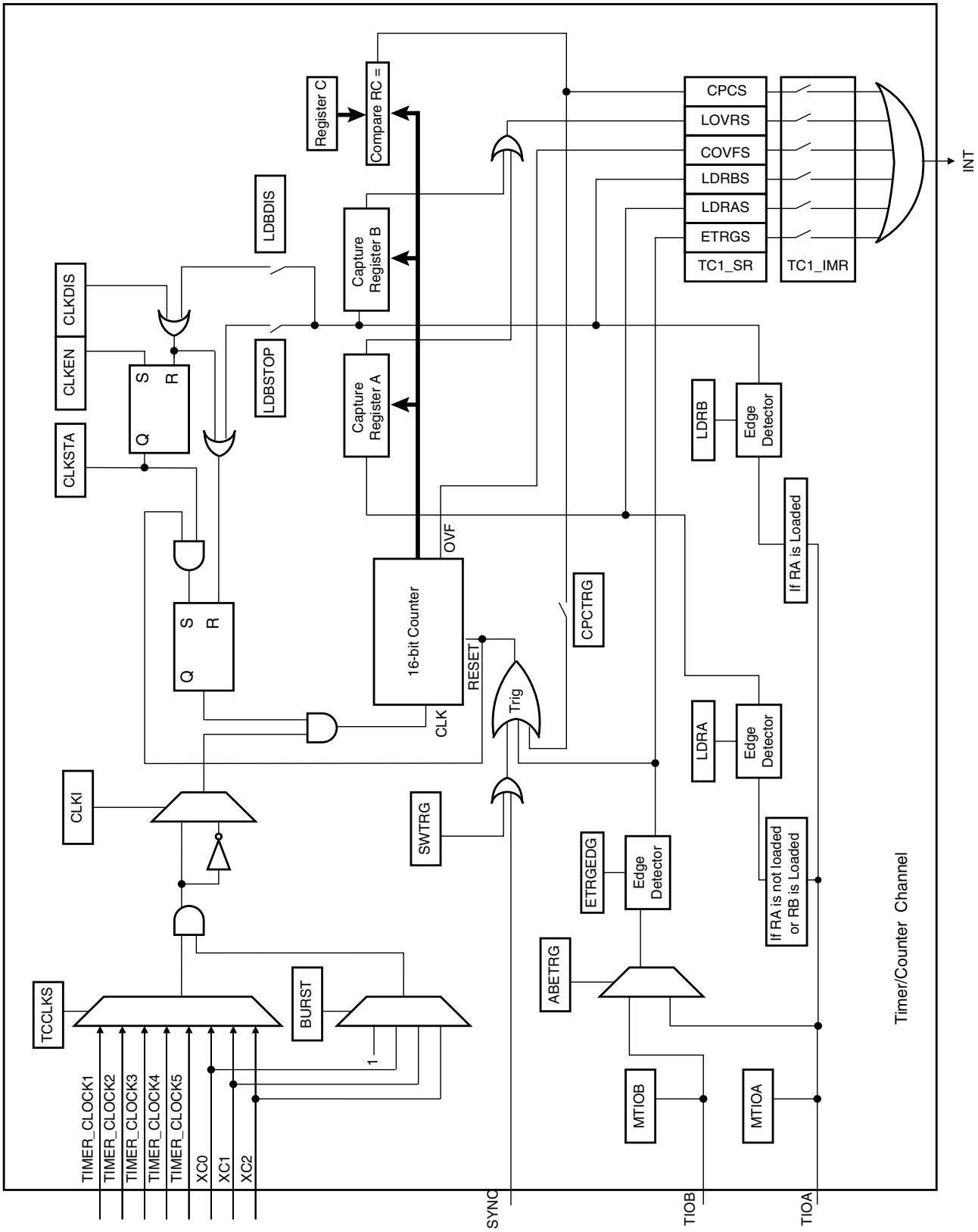

32.6.10 Waveform Operating Mode

Waveform operating mode is entered by setting the WAVE parameter in TC_CMR (Channel Mode Register).

In Waveform Operating Mode the TC channel generates 1 or 2 PWM signals with the same frequency and independently programmable duty cycles, or generates different types of one-shot or repetitive pulses.

In this mode, TIOA is configured as an output and TIOB is defined as an output if it is not used as an external event (EEVT parameter in TC_CMR).

Figure 32-6 shows the configuration of the TC channel when programmed in Waveform Operating Mode.

32.6.11 Waveform Selection

Depending on the WAVSEL parameter in TC_CMR (Channel Mode Register), the behavior of TC_CV varies.

With any selection, RA, RB and RC can all be used as compare registers.

RA Compare is used to control the TIOA output, RB Compare is used to control the TIOB output (if correctly configured) and RC Compare is used to control TIOA and/or TIOB outputs.

Figure 32-6. Waveform Mode

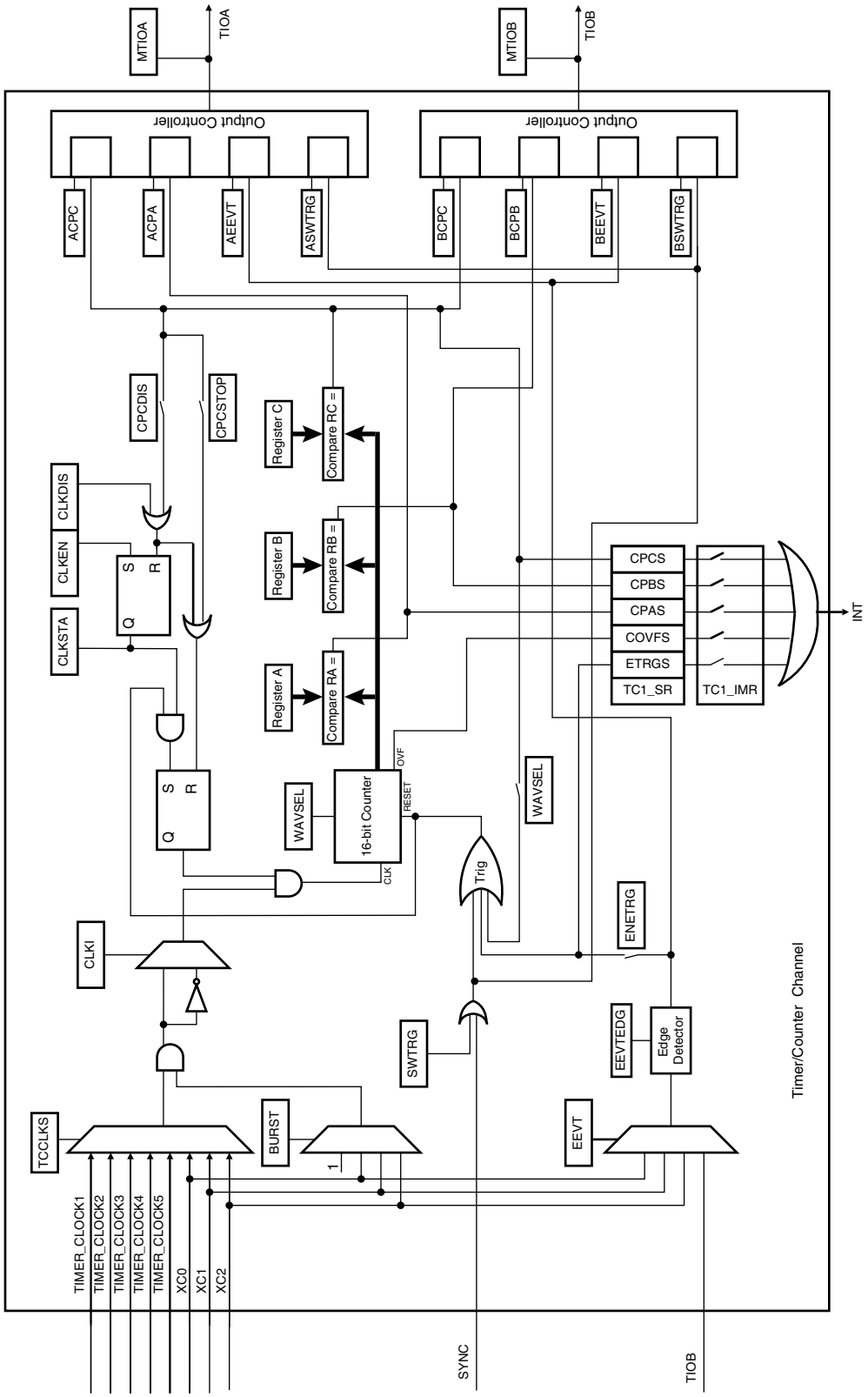

32.6.11.1 WAVSEL = 00

When WAVSEL = 00, the value of TC_CV is incremented from 0 to 0xFFFF. Once 0xFFFF has been reached, the value of TC_CV is reset. Incrementation of TC_CV starts again and the cycle continues. See Figure 32-7.

An external event trigger or a software trigger can reset the value of TC_CV. It is important to note that the trigger may occur at any time. See Figure 32-8.

RC Compare cannot be programmed to generate a trigger in this configuration. At the same time, RC Compare can stop the counter clock (CPCSTOP = 1 in TC_CMR) and/or disable the counter clock (CPCDIS = 1 in TC_CMR).

Figure 32-7. WAVSEL= 00 without trigger

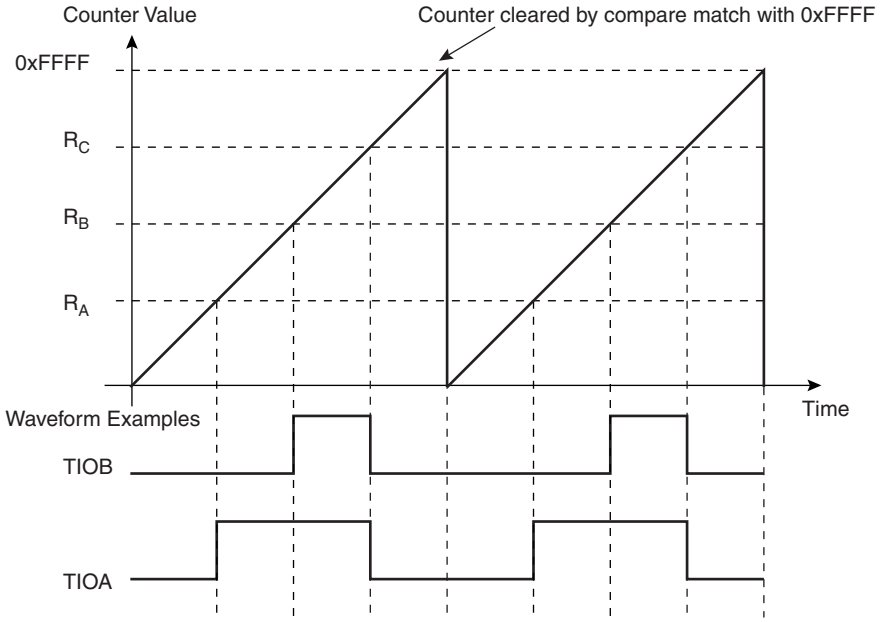

Figure 32-8. WAVSEL= 00 with trigger

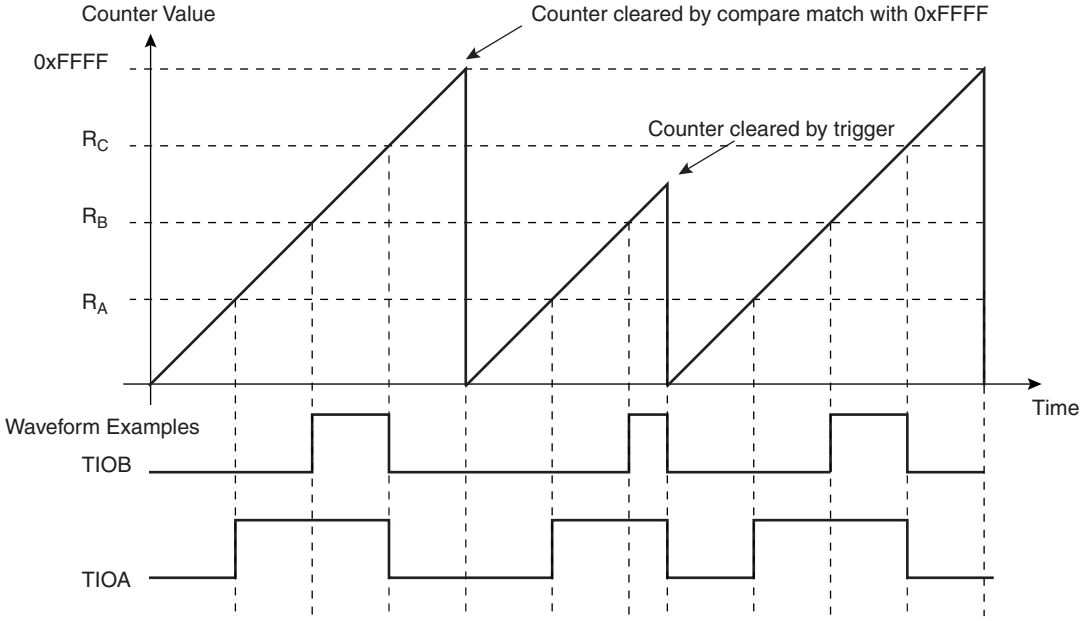

32.6.11.2 WAVSEL = 10

When WAVSEL = 10, the value of TC_CV is incremented from 0 to the value of RC, then automatically reset on a RC Compare. Once the value of TC_CV has been reset, it is then incremented and so on. See Figure 32-9.

It is important to note that TC_CV can be reset at any time by an external event or a software trigger if both are programmed correctly. See Figure 32-10.

In addition, RC Compare can stop the counter clock (CPCSTOP = 1 in TC_CMR) and/or disable the counter clock (CPCDIS = 1 in TC_CMR).

Figure 32-9. WAVSEL = 10 Without Trigger

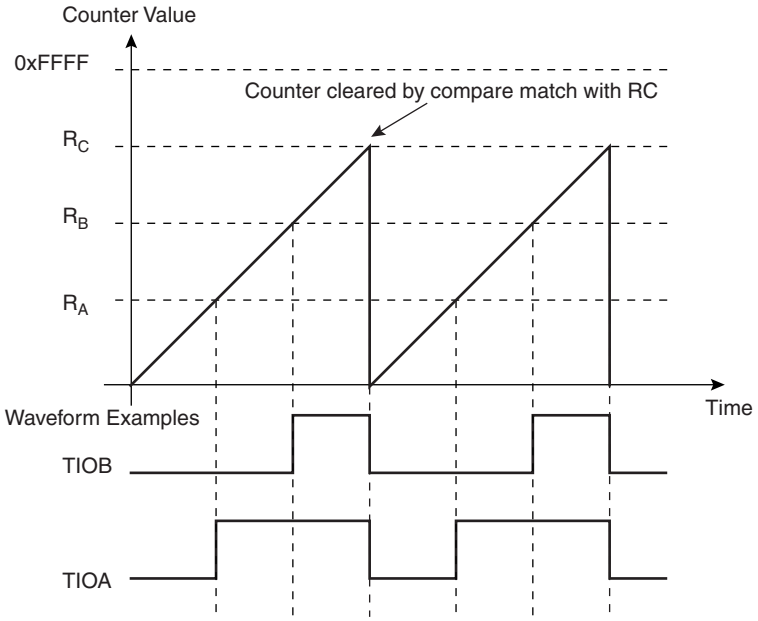

Figure 32-10. WAVSEL = 10 With Trigger

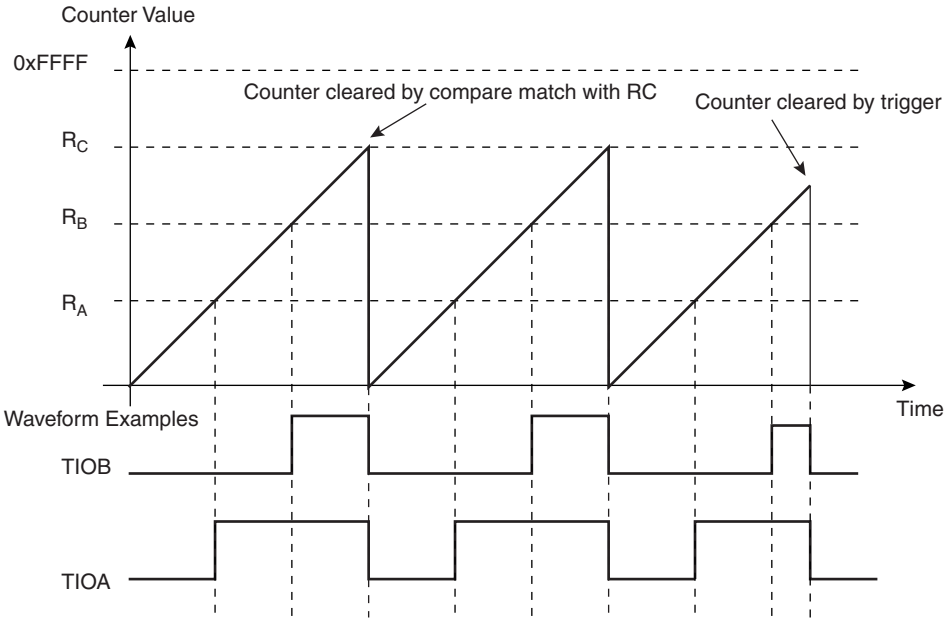

32.6.11.3 WAVSEL = 01

When WAVSEL = 01, the value of TC_CV is incremented from 0 to 0xFFFF. Once 0xFFFF is reached, the value of TC_CV is decremented to 0, then re-incremented to 0xFFFF and so on. See Figure 32-11.

A trigger such as an external event or a software trigger can modify TC_CV at any time. If a trigger occurs while TC_CV is incrementing, TC_CV then decrements. If a trigger is received while TC_CV is decrementing, TC_CV then increments. See Figure 32-12.

RC Compare cannot be programmed to generate a trigger in this configuration.

At the same time, RC Compare can stop the counter clock (CPCSTOP = 1) and/or disable the counter clock (CPCDIS = 1).

Figure 32-11. WAVSEL = 01 Without Trigger

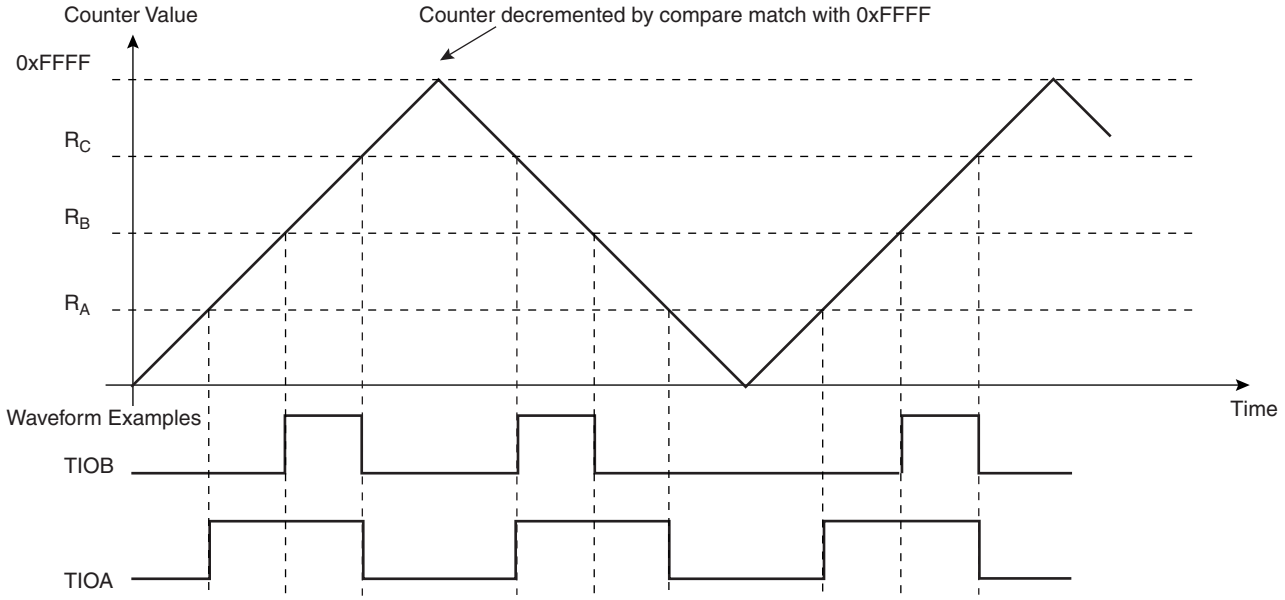

Figure 32-12. WAVSEL = 01 With Trigger

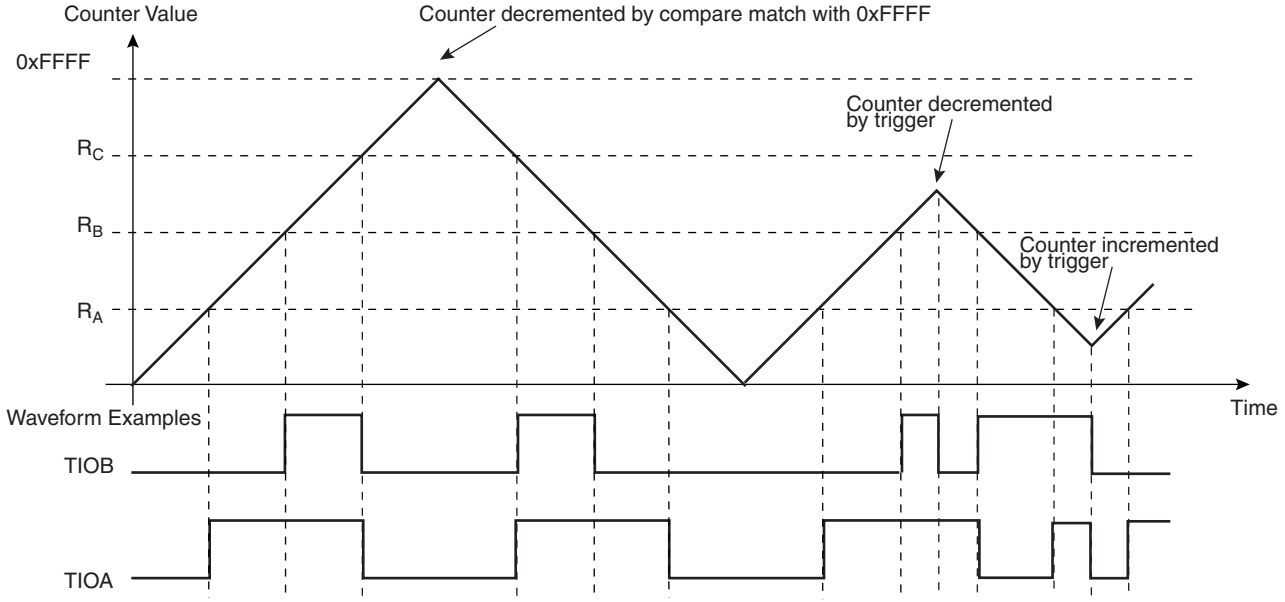

32.6.11.4 WAVSEL = 11

When WAVSEL = 11, the value of TC_CV is incremented from 0 to RC. Once RC is reached, the value of TC_CV is decremented to 0, then re-incremented to RC and so on. See Figure 32-13.

A trigger such as an external event or a software trigger can modify TC_CV at any time. If a trigger occurs while TC_CV is incrementing, TC_CV then decrements. If a trigger is received while TC_CV is decrementing, TC_CV then increments. See Figure 32-14.

RC Compare can stop the counter clock (CPCSTOP = 1) and/or disable the counter clock (CPCDIS = 1).

Figure 32-13. WAVSEL = 11 Without Trigger

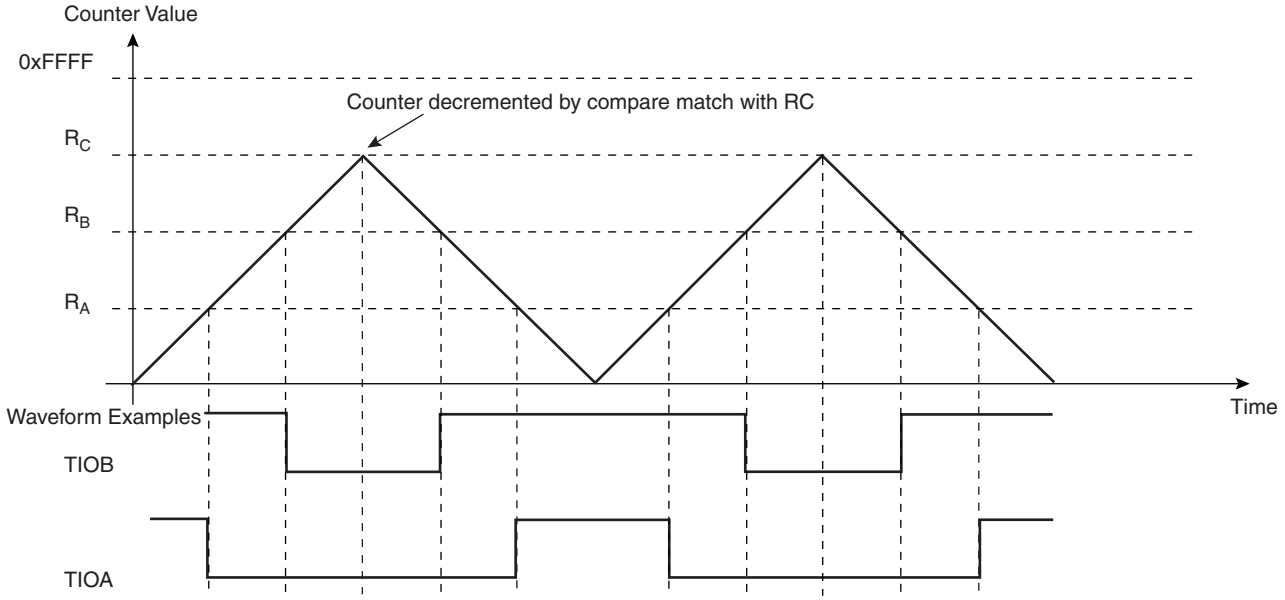

Figure 32-14. WAVSEL = 11 With Trigger

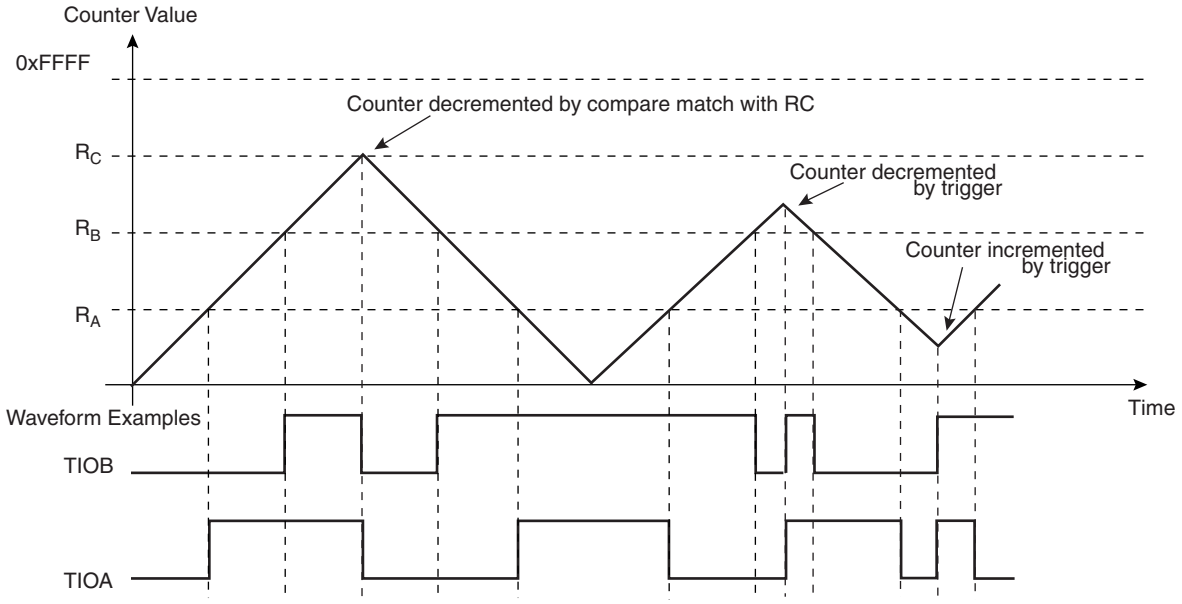

32.6.12 External Event/Trigger Conditions

An external event can be programmed to be detected on one of the clock sources (XC0, XC1, XC2) or TIOB. The external event selected can then be used as a trigger.

The EEVT parameter in TC_CMR selects the external trigger. The EEVTEDG parameter defines the trigger edge for each of the possible external triggers (rising, falling or both). If EEVTEDG is cleared (none), no external event is defined.

If TIOB is defined as an external event signal (EEVT = 0), TIOB is no longer used as an output and the compare register B is not used to generate waveforms and subsequently no IRQs. In this case the TC channel can only generate a waveform on TIOA.

When an external event is defined, it can be used as a trigger by setting bit ENETRG in TC_CMR.

As in Capture Mode, the SYNC signal and the software trigger are also available as triggers. RC Compare can also be used as a trigger depending on the parameter WAVSEL.

32.6.13 Output Controller

The output controller defines the output level changes on TIOA and TIOB following an event. TIOB control is used only if TIOB is defined as output (not as an external event).

The following events control TIOA and TIOB: software trigger, external event and RC compare. RA compare controls TIOA and RB compare controls TIOB. Each of these events can be programmed to set, clear or toggle the output as defined in the corresponding parameter in TC_CMR.

32.7 Timer Counter (TC) User Interface

Table 32-4. Register Mapping

Offset[1]	Register	Name	Access	Reset
0x00 + channel * 0x40 + 0x00	Channel Control Register	TC_CCR	Write-only	–
0x00 + channel * 0x40 + 0x04	Channel Mode Register	TC_CMR	Read-write	0
0x00 + channel * 0x40 + 0x08	Reserved			
0x00 + channel * 0x40 + 0x0C	Reserved			
0x00 + channel * 0x40 + 0x10	Counter Value	TC_CV	Read-only	0
0x00 + channel * 0x40 + 0x14	Register A	TC_RA	Read-write[2]	0
0x00 + channel * 0x40 + 0x18	Register B	TC_RB	Read-write[2]	0
0x00 + channel * 0x40 + 0x1C	Register C	TC_RC	Read-write	0
0x00 + channel * 0x40 + 0x20	Status Register	TC_SR	Read-only	0
0x00 + channel * 0x40 + 0x24	Interrupt Enable Register	TC_IER	Write-only	–
0x00 + channel * 0x40 + 0x28	Interrupt Disable Register	TC_IDR	Write-only	–
0x00 + channel * 0x40 + 0x2C	Interrupt Mask Register	TC_IMR	Read-only	0
0xC0	Block Control Register	TC_BCR	Write-only	–
0xC4	Block Mode Register	TC_BMR	Read-write	0
0xD8	Reserved			
0xE4	Reserved			
0xFC	Reserved	–	–	–

Notes: 1. Channel index ranges from 0 to 2.
2. Read-only if WAVE = 0

32.7.1 TC Block Control Register

Name: TC_BCR

Addresses: 0xFFF7C0C0 (0), 0xFFFD40C0 (1)

Access: Write-only

31	30	29	28	27	26	25	24
–	–	–	–	–	–	–	–

23	22	21	20	19	18	17	16
–	–	–	–	–	–	–	–

15	14	13	12	11	10	9	8
–	–	–	–	–	–	–	–

7	6	5	4	3	2	1	0
–	–	–	–	–	–	–	SYNC

- **SYNC: Synchro Command**

0 = no effect.

1 = asserts the SYNC signal which generates a software trigger simultaneously for each of the channels.

32.7.2 TC Block Mode Register

Name: TC_BMR

Addresses: 0xFFF7C0C4 (0), 0xFFFD40C4 (1)

Access: Read-write

31	30	29	28	27	26	25	24
–	–	–	–	–	–	–	–
23	22	21	20	19	18	17	16
–	–	–	–	–	–	–	–
15	14	13	12	11	10	9	8
–	–	–	–	–	–	–	–
7	6	5	4	3	2	1	0
–	–	TC2XC2S		TC1XC1S		TC0XC0S	

- **TC0XC0S: External Clock Signal 0 Selection**

TC0XC0S		Signal Connected to XC0
0	0	TCLK0
0	1	none
1	0	TIOA1
1	1	TIOA2

- **TC1XC1S: External Clock Signal 1 Selection**

TC1XC1S		Signal Connected to XC1
0	0	TCLK1
0	1	none
1	0	TIOA0
1	1	TIOA2

- **TC2XC2S: External Clock Signal 2 Selection**

TC2XC2S		Signal Connected to XC2
0	0	TCLK2
0	1	none
1	0	TIOA0
1	1	TIOA1

32.7.3 TC Channel Control Register

Name: TC_CCRx [x=0..2]

Addresses: 0xFFF7C000 (0)[0], 0xFFF7C040 (0)[1], 0xFFF7C080 (0)[2], 0xFFFD4000 (1)[0], 0xFFFD4040 (1)[1], 0xFFFD4080 (1)[2]

Access: Write-only

31	30	29	28	27	26	25	24
–	–	–	–	–	–	–	–
23	22	21	20	19	18	17	16
–	–	–	–	–	–	–	–
15	14	13	12	11	10	9	8
–	–	–	–	–	–	–	–
7	6	5	4	3	2	1	0
–	–	–	–	–	SWTRG	CLKDIS	CLKEN

- **CLKEN: Counter Clock Enable Command**

0 = no effect.

1 = enables the clock if CLKDIS is not 1.

- **CLKDIS: Counter Clock Disable Command**

0 = no effect.

1 = disables the clock.

- **SWTRG: Software Trigger Command**

0 = no effect.

1 = a software trigger is performed: the counter is reset and the clock is started.

32.7.4 TC Channel Mode Register: Capture Mode

Name: TC_CMRx [x=0..2] (WAVE = 0)

Addresses: 0xFFF7C004 (0)[0], 0xFFF7C044 (0)[1], 0xFFF7C084 (0)[2], 0xFFFD4004 (1)[0], 0xFFFD4044 (1)[1], 0xFFFD4084 (1)[2]

Access: Read-write

31	30	29	28	27	26	25	24
–	–	–	–	–	–	–	–

23	22	21	20	19	18	17	16
–	–	–	–	LDRB		LDRA	

15	14	13	12	11	10	9	8
WAVE	CPCTRG	–	–	–	ABETRG	ETRGEDG	

7	6	5	4	3	2	1	0
LDBDIS	LDBSTOP	BURST		CLKI	TCCLKS		

- **TCCLKS: Clock Selection**

TCCLKS			Clock Selected
0	0	0	TIMER_CLOCK1
0	0	1	TIMER_CLOCK2
0	1	0	TIMER_CLOCK3
0	1	1	TIMER_CLOCK4
1	0	0	TIMER_CLOCK5
1	0	1	XC0
1	1	0	XC1
1	1	1	XC2

- **CLKI: Clock Invert**

0 = counter is incremented on rising edge of the clock.

1 = counter is incremented on falling edge of the clock.

- **BURST: Burst Signal Selection**

BURST		
0	0	The clock is not gated by an external signal.
0	1	XC0 is ANDed with the selected clock.
1	0	XC1 is ANDed with the selected clock.
1	1	XC2 is ANDed with the selected clock.

- **LDBSTOP: Counter Clock Stopped with RB Loading**

0 = counter clock is not stopped when RB loading occurs.

1 = counter clock is stopped when RB loading occurs.

- **LDBDIS: Counter Clock Disable with RB Loading**

0 = counter clock is not disabled when RB loading occurs.

1 = counter clock is disabled when RB loading occurs.

- **ETRGEDG: External Trigger Edge Selection**

ETRGEDG		Edge
0	0	none
0	1	rising edge
1	0	falling edge
1	1	each edge

- **ABETRG: TIOA or TIOB External Trigger Selection**

0 = TIOB is used as an external trigger.

1 = TIOA is used as an external trigger.

- **CPCTRG: RC Compare Trigger Enable**

0 = RC Compare has no effect on the counter and its clock.

1 = RC Compare resets the counter and starts the counter clock.

- **WAVE**

0 = Capture Mode is enabled.

1 = Capture Mode is disabled (Waveform Mode is enabled).

- **LDRA: RA Loading Selection**

LDRA		Edge
0	0	none
0	1	rising edge of TIOA
1	0	falling edge of TIOA
1	1	each edge of TIOA

- **LDRB: RB Loading Selection**

LDRB		Edge
0	0	none
0	1	rising edge of TIOA
1	0	falling edge of TIOA
1	1	each edge of TIOA

32.7.5 TC Channel Mode Register: Waveform Mode

Name: TC_CMRx [x=0..2] (WAVE = 1)

Addresses: 0xFFF7C004 (0)[0], 0xFFF7C044 (0)[1], 0xFFF7C084 (0)[2], 0xFFFD4004 (1)[0], 0xFFFD4044 (1)[1], 0xFFFD4084 (1)[2]

Access: Read-write

31	30	29	28	27	26	25	24
BSWTRG		BEEVT		BCPC		BCPB	

23	22	21	20	19	18	17	16
ASWTRG		AEEVT		ACPC		ACPA	

15	14	13	12	11	10	9	8
WAVE	WAVSEL		ENETRG	EEVT		EEVTEDG	

7	6	5	4	3	2	1	0
CPCDIS	CPCSTOP	BURST		CLKI	TCCLKS		

- **TCCLKS: Clock Selection**

TCCLKS			Clock Selected
0	0	0	TIMER_CLOCK1
0	0	1	TIMER_CLOCK2
0	1	0	TIMER_CLOCK3
0	1	1	TIMER_CLOCK4
1	0	0	TIMER_CLOCK5
1	0	1	XC0
1	1	0	XC1
1	1	1	XC2

- **CLKI: Clock Invert**

0 = counter is incremented on rising edge of the clock.

1 = counter is incremented on falling edge of the clock.

- **BURST: Burst Signal Selection**

BURST		
0	0	The clock is not gated by an external signal.
0	1	XC0 is ANDed with the selected clock.
1	0	XC1 is ANDed with the selected clock.
1	1	XC2 is ANDed with the selected clock.

- **CPCSTOP: Counter Clock Stopped with RC Compare**

0 = counter clock is not stopped when counter reaches RC.

1 = counter clock is stopped when counter reaches RC.

- **CPCDIS: Counter Clock Disable with RC Compare**

0 = counter clock is not disabled when counter reaches RC.

1 = counter clock is disabled when counter reaches RC.

- **EEVTEDG: External Event Edge Selection**

EEVTEDG		Edge
0	0	none
0	1	rising edge
1	0	falling edge
1	1	each edge

- **EEVT: External Event Selection**

EEVT		Signal selected as external event	TIOB Direction
0	0	TIOB	input [(1)]
0	1	XC0	output
1	0	XC1	output
1	1	XC2	output

Note: 1. *If TIOB is chosen as the external event signal, it is configured as an input and no longer generates waveforms and subsequently no IRQs.*

- **ENETRG: External Event Trigger Enable**

0 = the external event has no effect on the counter and its clock. In this case, the selected external event only controls the TIOA output.

1 = the external event resets the counter and starts the counter clock.

- **WAVSEL: Waveform Selection**

WAVSEL		Effect
0	0	UP mode without automatic trigger on RC Compare
1	0	UP mode with automatic trigger on RC Compare
0	1	UPDOWN mode without automatic trigger on RC Compare
1	1	UPDOWN mode with automatic trigger on RC Compare

- **WAVE**

0 = Waveform Mode is disabled (Capture Mode is enabled).

1 = Waveform Mode is enabled.

- **ACPA: RA Compare Effect on TIOA**

ACPA		Effect
0	0	none

ACPA		Effect
0	1	set
1	0	clear
1	1	toggle

- **ACPC: RC Compare Effect on TIOA**

ACPC		Effect
0	0	none
0	1	set
1	0	clear
1	1	toggle

- **AEEVT: External Event Effect on TIOA**

AEEVT		Effect
0	0	none
0	1	set
1	0	clear
1	1	toggle

- **ASWTRG: Software Trigger Effect on TIOA**

ASWTRG		Effect
0	0	none
0	1	set
1	0	clear
1	1	toggle

- **BCPB: RB Compare Effect on TIOB**

BCPB		Effect
0	0	none
0	1	set
1	0	clear
1	1	toggle

- **BCPC: RC Compare Effect on TIOB**

BCPC		Effect
0	0	none

BCPC		Effect
0	1	set
1	0	clear
1	1	toggle

- **BEEVT: External Event Effect on TIOB**

BEEVT		Effect
0	0	none
0	1	set
1	0	clear
1	1	toggle

- **BSWTRG: Software Trigger Effect on TIOB**

BSWTRG		Effect
0	0	none
0	1	set
1	0	clear
1	1	toggle

32.7.6 TC Counter Value Register

Name: TC_CVx [x=0..2]

Addresses: 0xFFF7C010 (0)[0], 0xFFF7C050 (0)[1], 0xFFF7C090 (0)[2], 0xFFFD4010 (1)[0]
0xFFFD4050 (1)[1], 0xFFFD4090 (1)[2]

Access: Read-only

31	30	29	28	27	26	25	24
–	–	–	–	–	–	–	–

23	22	21	20	19	18	17	16
–	–	–	–	–	–	–	–

15	14	13	12	11	10	9	8
CV							

7	6	5	4	3	2	1	0
CV							

- **CV: Counter Value**

CV contains the counter value in real time.

32.7.7 TC Register A

Name: TC_RAx [x=0..2]

Addresses: 0xFFF7C014 (0)[0], 0xFFF7C054 (0)[1], 0xFFF7C094 (0)[2], 0xFFFD4014 (1)[0], 0xFFFD4054 (1)[1], 0xFFFD4094 (1)[2]

Access: Read-only if WAVE = 0, Read-write if WAVE = 1

31	30	29	28	27	26	25	24
–	–	–	–	–	–	–	–
23	22	21	20	19	18	17	16
–	–	–	–	–	–	–	–
15	14	13	12	11	10	9	8
RA							
7	6	5	4	3	2	1	0
RA							

- **RA: Register A**

RA contains the Register A value in real time.

32.7.8 TC Register B

Name: TC_RBx [x=0..2]

Addresses: 0xFFF7C018 (0)[0], 0xFFF7C058 (0)[1], 0xFFF7C098 (0)[2], 0xFFFD4018 (1)[0], 0xFFFD4058 (1)[1], 0xFFFD4098 (1)[2]

Access: Read-only if WAVE = 0, Read-write if WAVE = 1

31	30	29	28	27	26	25	24
–	–	–	–	–	–	–	–

23	22	21	20	19	18	17	16
–	–	–	–	–	–	–	–

15	14	13	12	11	10	9	8
RB							

7	6	5	4	3	2	1	0
RB							

- **RB: Register B**

RB contains the Register B value in real time.

32.7.9 TC Register C

Name: TC_RCx [x=0..2]

Addresses: 0xFFF7C01C (0)[0], 0xFFF7C05C (0)[1], 0xFFF7C09C (0)[2], 0xFFFD401C (1)[0], 0xFFFD405C (1)[1], 0xFFFD409C (1)[2]

Access: Read-write

31	30	29	28	27	26	25	24
–	–	–	–	–	–	–	–

23	22	21	20	19	18	17	16
–	–	–	–	–	–	–	–

15	14	13	12	11	10	9	8
RC							

7	6	5	4	3	2	1	0
RC							

- **RC: Register C**

RC contains the Register C value in real time.

32.7.10 TC Status Register

Name: TC_SRx [x=0..2]

Addresses: 0xFFF7C020 (0)[0], 0xFFF7C060 (0)[1], 0xFFF7C0A0 (0)[2], 0xFFFD4020 (1)[0], 0xFFFD4060 (1)[1], 0xFFFD40A0 (1)[2]

Access: Read-only

31	30	29	28	27	26	25	24
–	–	–	–	–	–	–	–
23	22	21	20	19	18	17	16
–	–	–	–	–	MTIOB	MTIOA	CLKSTA
15	14	13	12	11	10	9	8
–	–	–	–	–	–	–	–
7	6	5	4	3	2	1	0
ETRGS	LDRBS	LDRAS	CPCS	CPBS	CPAS	LOVRS	COVFS

- **COVFS: Counter Overflow Status**

0 = no counter overflow has occurred since the last read of the Status Register.

1 = a counter overflow has occurred since the last read of the Status Register.

- **LOVRS: Load Overrun Status**

0 = Load overrun has not occurred since the last read of the Status Register or WAVE = 1.

1 = RA or RB have been loaded at least twice without any read of the corresponding register since the last read of the Status Register, if WAVE = 0.

- **CPAS: RA Compare Status**

0 = RA Compare has not occurred since the last read of the Status Register or WAVE = 0.

1 = RA Compare has occurred since the last read of the Status Register, if WAVE = 1.

- **CPBS: RB Compare Status**

0 = RB Compare has not occurred since the last read of the Status Register or WAVE = 0.

1 = RB Compare has occurred since the last read of the Status Register, if WAVE = 1.

- **CPCS: RC Compare Status**

0 = RC Compare has not occurred since the last read of the Status Register.

1 = RC Compare has occurred since the last read of the Status Register.

- **LDRAS: RA Loading Status**

0 = RA Load has not occurred since the last read of the Status Register or WAVE = 1.

1 = RA Load has occurred since the last read of the Status Register, if WAVE = 0.

- **LDRBS: RB Loading Status**

0 = RB Load has not occurred since the last read of the Status Register or WAVE = 1.

1 = RB Load has occurred since the last read of the Status Register, if WAVE = 0.

- **ETRGS: External Trigger Status**

0 = external trigger has not occurred since the last read of the Status Register.

1 = external trigger has occurred since the last read of the Status Register.

- **CLKSTA: Clock Enabling Status**

0 = clock is disabled.

1 = clock is enabled.

- **MTIOA: TIOA Mirror**

0 = TIOA is low. If WAVE = 0, this means that TIOA pin is low. If WAVE = 1, this means that TIOA is driven low.

1 = TIOA is high. If WAVE = 0, this means that TIOA pin is high. If WAVE = 1, this means that TIOA is driven high.

- **MTIOB: TIOB Mirror**

0 = TIOB is low. If WAVE = 0, this means that TIOB pin is low. If WAVE = 1, this means that TIOB is driven low.

1 = TIOB is high. If WAVE = 0, this means that TIOB pin is high. If WAVE = 1, this means that TIOB is driven high.

32.7.11 TC Interrupt Enable Register

Name: TC_IERx [x=0..2]

Addresses: 0xFFF7C024 (0)[0], 0xFFF7C064 (0)[1], 0xFFF7C0A4 (0)[2], 0xFFFD4024 (1)[0], 0xFFFD4064 (1)[1], 0xFFFD40A4 (1)[2]

Access: Write-only

31	30	29	28	27	26	25	24
–	–	–	–	–	–	–	–
23	22	21	20	19	18	17	16
–	–	–	–	–	–	–	–
15	14	13	12	11	10	9	8
–	–	–	–	–	–	–	–
7	6	5	4	3	2	1	0
ETRGS	LDRBS	LDRAS	CPCS	CPBS	CPAS	LOVRS	COVFS

- **COVFS: Counter Overflow**

0 = no effect.

1 = enables the Counter Overflow Interrupt.

- **LOVRS: Load Overrun**

0 = no effect.

1 = enables the Load Overrun Interrupt.

- **CPAS: RA Compare**

0 = no effect.

1 = enables the RA Compare Interrupt.

- **CPBS: RB Compare**

0 = no effect.

1 = enables the RB Compare Interrupt.

- **CPCS: RC Compare**

0 = no effect.

1 = enables the RC Compare Interrupt.

- **LDRAS: RA Loading**

0 = no effect.

1 = enables the RA Load Interrupt.

- **LDRBS: RB Loading**

0 = no effect.

1 = enables the RB Load Interrupt.

- **ETRGS: External Trigger**

0 = no effect.

1 = enables the External Trigger Interrupt.

32.7.12 TC Interrupt Disable Register

Name: TC_IDRx [x=0..2]

Addresses: 0xFFF7C028 (0)[0], 0xFFF7C068 (0)[1], 0xFFF7C0A8 (0)[2], 0xFFFD4028 (1)[0], 0xFFFD4068 (1)[1], 0xFFFD40A8 (1)[2]

Access: Write-only

31	30	29	28	27	26	25	24
–	–	–	–	–	–	–	–

23	22	21	20	19	18	17	16
–	–	–	–	–	–	–	–

15	14	13	12	11	10	9	8
–	–	–	–	–	–	–	–

7	6	5	4	3	2	1	0
ETRGS	LDRBS	LDRAS	CPCS	CPBS	CPAS	LOVRS	COVFS

- **COVFS: Counter Overflow**

0 = no effect.

1 = disables the Counter Overflow Interrupt.

- **LOVRS: Load Overrun**

0 = no effect.

1 = disables the Load Overrun Interrupt (if WAVE = 0).

- **CPAS: RA Compare**

0 = no effect.

1 = disables the RA Compare Interrupt (if WAVE = 1).

- **CPBS: RB Compare**

0 = no effect.

1 = disables the RB Compare Interrupt (if WAVE = 1).

- **CPCS: RC Compare**

0 = no effect.

1 = disables the RC Compare Interrupt.

- **LDRAS: RA Loading**

0 = no effect.

1 = disables the RA Load Interrupt (if WAVE = 0).

- **LDRBS: RB Loading**

0 = no effect.

1 = disables the RB Load Interrupt (if WAVE = 0).

- **ETRGS: External Trigger**

0 = no effect.

1 = disables the External Trigger Interrupt.

32.7.13 TC Interrupt Mask Register

Name: TC_IMRx [x=0..2]

Addresses: 0xFFF7C02C (0)[0], 0xFFF7C06C (0)[1], 0xFFF7C0AC (0)[2], 0xFFFD402C (1)[0], 0xFFFD406C (1)[1], 0xFFFD40AC (1)[2]

Access: Read-only

31	30	29	28	27	26	25	24
–	–	–	–	–	–	–	–
23	22	21	20	19	18	17	16
–	–	–	–	–	–	–	–
15	14	13	12	11	10	9	8
–	–	–	–	–	–	–	–
7	6	5	4	3	2	1	0
ETRGS	LDRBS	LDRAS	CPCS	CPBS	CPAS	LOVRS	COVFS

- **COVFS: Counter Overflow**

0 = the Counter Overflow Interrupt is disabled.

1 = the Counter Overflow Interrupt is enabled.

- **LOVRS: Load Overrun**

0 = the Load Overrun Interrupt is disabled.

1 = the Load Overrun Interrupt is enabled.

- **CPAS: RA Compare**

0 = the RA Compare Interrupt is disabled.

1 = the RA Compare Interrupt is enabled.

- **CPBS: RB Compare**

0 = the RB Compare Interrupt is disabled.

1 = the RB Compare Interrupt is enabled.

- **CPCS: RC Compare**

0 = the RC Compare Interrupt is disabled.

1 = the RC Compare Interrupt is enabled.

- **LDRAS: RA Loading**

0 = the Load RA Interrupt is disabled.

1 = the Load RA Interrupt is enabled.

- **LDRBS: RB Loading**

0 = the Load RB Interrupt is disabled.

1 = the Load RB Interrupt is enabled.

- **ETRGS: External Trigger**

0 = the External Trigger Interrupt is disabled.

1 = the External Trigger Interrupt is enabled.

33. Universal Synchronous Asynchronous Receiver Transmitter (USART)

33.1 Description

The Universal Synchronous Asynchronous Receiver Transmitter (USART) provides one full duplex universal synchronous asynchronous serial link. Data frame format is widely programmable (data length, parity, number of stop bits) to support a maximum of standards. The receiver implements parity error, framing error and overrun error detection. The receiver time-out enables handling variable-length frames and the transmitter timeguard facilitates communications with slow remote devices. Multidrop communications are also supported through address bit handling in reception and transmission.

The USART features three test modes: remote loopback, local loopback and automatic echo.

The USART supports specific operating modes providing interfaces on RS485, LIN and SPI buses, with ISO7816 T = 0 or T = 1 smart card slots and infrared transceivers. The hardware handshaking feature enables an out-of-band flow control by automatic management of the pins RTS and CTS.

The USART supports the connection to the Peripheral DMA Controller, which enables data transfers to the transmitter and from the receiver. The PDC provides chained buffer management without any intervention of the processor.

33.2 Embedded Characteristics

- Programmable Baud Rate Generator
- 5- to 9-bit full-duplex synchronous or asynchronous serial communications
  - 1, 1.5 or 2 stop bits in Asynchronous Mode or 1 or 2 stop bits in Synchronous Mode
  - Parity generation and error detection
  - Framing error detection, overrun error detection
  - MSB- or LSB-first
  - Optional break generation and detection
  - By 8 or by-16 over-sampling receiver frequency
  - Hardware handshaking RTS-CTS
  - Receiver time-out and transmitter timeguard
  - Optional Multi-drop Mode with address generation and detection
  - Optional Manchester Encoding
- RS485 with driver control signal
- ISO7816, T = 0 or T = 1 Protocols for interfacing with smart cards
  - NACK handling, error counter with repetition and iteration limit
- IrDA modulation and demodulation
  - Communication at up to 115.2 Kbps
- Test Modes
  - Remote Loopback, Local Loopback, Automatic Echo

33.3 Block Diagram

Figure 33-1. USART Block Diagram

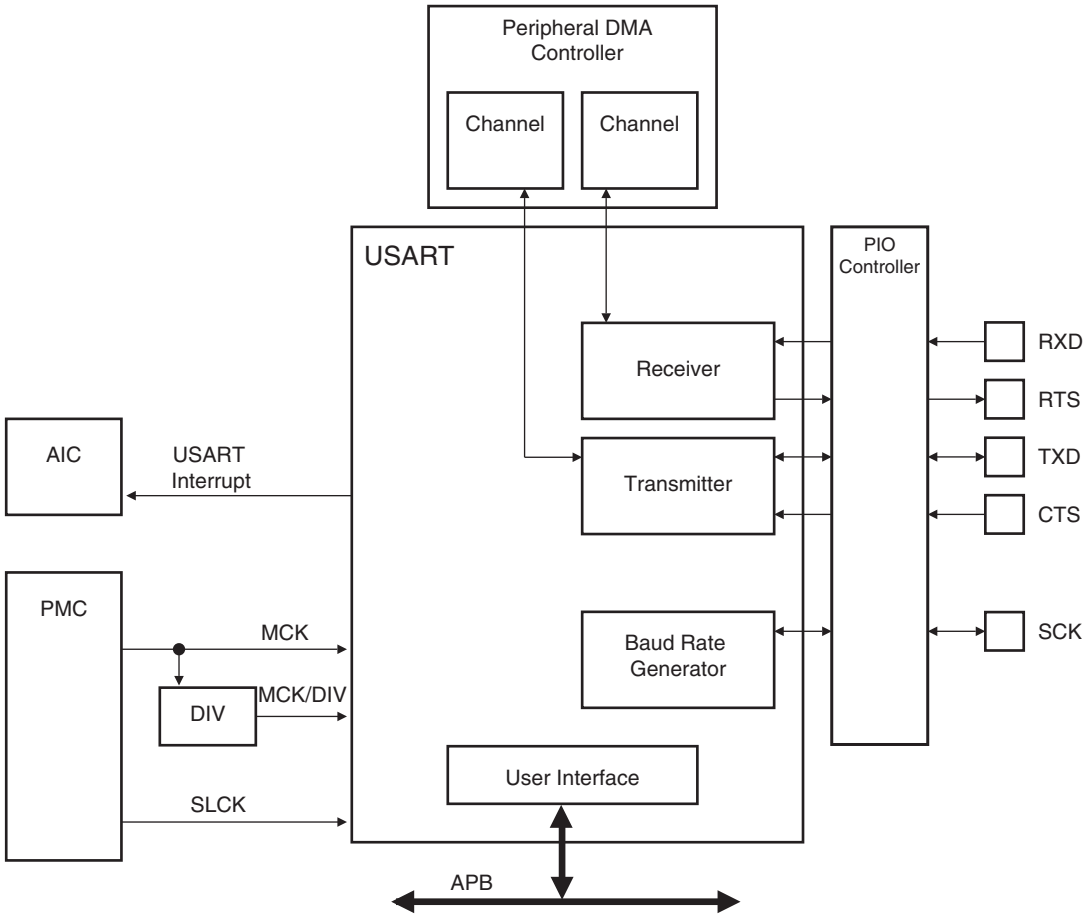

Table 33-1. SPI Operating Mode

PIN	USART	SPI Slave	SPI Master
RXD	RXD	MOSI	MISO
TXD	TXD	MISO	MOSI
RTS	RTS	–	CS
CTS	CTS	CS	–

33.4 Application Block Diagram

Figure 33-2. Application Block Diagram

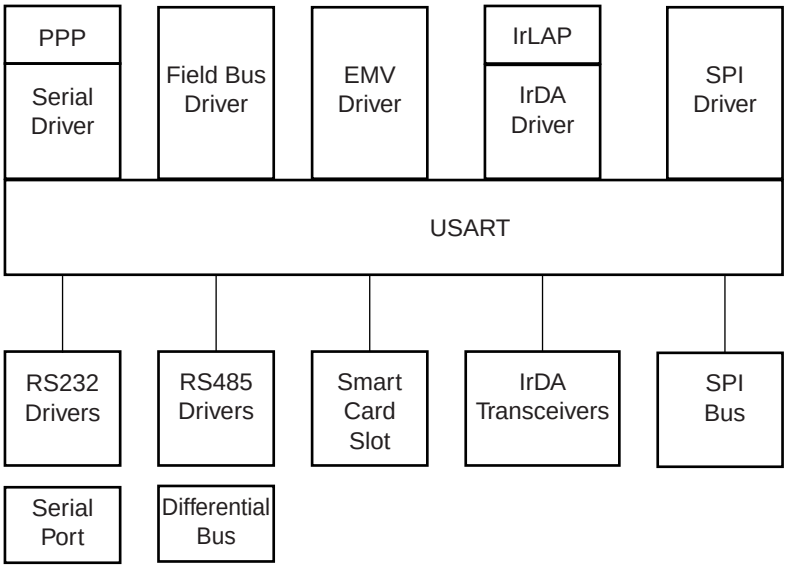

33.5 I/O Lines Description

Table 33-2. I/O Line Description

Name	Description	Type	Active Level
SCK	Serial Clock	I/O	
TXD	Transmit Serial Data or Master Out Slave In (MOSI) in SPI Master Mode or Master In Slave Out (MISO) in SPI Slave Mode	I/O	
RXD	Receive Serial Data or Master In Slave Out (MISO) in SPI Master Mode or Master Out Slave In (MOSI) in SPI Slave Mode	Input	
CTS	Clear to Send or Slave Select (NSS) in SPI Slave Mode	Input	Low
RTS	Request to Send or Slave Select (NSS) in SPI Master Mode	Output	Low

33.6 Product Dependencies

33.6.1 I/O Lines

The pins used for interfacing the USART may be multiplexed with the PIO lines. The programmer must first program the PIO controller to assign the desired USART pins to their peripheral function. If I/O lines of the USART are not used by the application, they can be used for other purposes by the PIO Controller.

To prevent the TXD line from falling when the USART is disabled, the use of an internal pull up is mandatory. If the hardware handshaking feature is used, the internal pull up on TXD must also be enabled.

Table 33-3. I/O Lines

Instance	Signal	I/O Line	Peripheral
USART0	CTS0	PB15	B
USART0	RTS0	PB17	B
USART0	RXD0	PB18	A
USART0	SCK0	PB16	B
USART0	TXD0	PB19	A
USART1	CTS1	PD17	A
USART1	RTS1	PD16	A
USART1	RXD1	PB5	A
USART1	SCK1	PD29	B
USART1	TXD1	PB4	A
USART2	CTS2	PC11	B
USART2	RTS2	PC9	B
USART2	RXD2	PB7	A
USART2	SCK2	PD30	B
USART2	TXD2	PB6	A
USART3	CTS3	PA24	B
USART3	RTS3	PA23	B
USART3	RXD3	PB9	A
USART3	SCK3	PA22	B
USART3	TXD3	PB8	A

33.6.2 Power Management

The USART is not continuously clocked. The programmer must first enable the USART Clock in the Power Management Controller (PMC) before using the USART. However, if the application does not require USART operations, the USART clock can be stopped when not needed and be restarted later. In this case, the USART will resume its operations where it left off.

Configuring the USART does not require the USART clock to be enabled.

33.6.3 Interrupt

The USART interrupt line is connected on one of the internal sources of the Advanced Inter-rupt Controller. Using the USART interrupt requires the AIC to be programmed first. Note that it is not recommended to use the USART interrupt line in edge sensitive mode.

Table 33-4. Peripheral IDs

Instance	ID
USART0	7
USART1	8
USART2	9
USART3	10

33.7 Functional Description

The USART is capable of managing several types of serial synchronous or asynchronous communications.

It supports the following communication modes:

- 5- to 9-bit full-duplex asynchronous serial communication
  - MSB- or LSB-first
  - 1, 1.5 or 2 stop bits
  - Parity even, odd, marked, space or none
  - By 8 or by 16 over-sampling receiver frequency
  - Optional hardware handshaking
  - Optional break management
  - Optional multidrop serial communication
- High-speed 5- to 9-bit full-duplex synchronous serial communication
  - MSB- or LSB-first
  - 1 or 2 stop bits
  - Parity even, odd, marked, space or none
  - By 8 or by 16 over-sampling frequency
  - Optional hardware handshaking
  - Optional break management
  - Optional multidrop serial communication
- RS485 with driver control signal
- ISO7816, T0 or T1 protocols for interfacing with smart cards
  - NACK handling, error counter with repetition and iteration limit
- InfraRed IrDA Modulation and Demodulation
- SPI Mode
  - Master or Slave
  - Serial Clock Programmable Phase and Polarity
  - SPI Serial Clock (SCK) Frequency up to Internal Clock Frequency MCK/4
- LIN Mode
  - Compliant with LIN 1.3 and LIN 2.0 specifications
  - Master or Slave
  - Processing of frames with up to 256 data bytes
  - Response Data length can be configurable or defined automatically by the Identifier
  - Self synchronization in Slave node configuration
  - Automatic processing and verification of the “Synch Break” and the “Synch Field”
  - The “Synch Break” is detected even if it is partially superimposed with a data byte
  - Automatic Identifier parity calculation/sending and verification
  - Parity sending and verification can be disabled
  - Automatic Checksum calculation/sending and verification
  - Checksum sending and verification can be disabled
  - Support both “Classic” and “Enhanced” checksum types
  - Full LIN error checking and reporting

– Frame Slot Mode: the Master allocates slots to the scheduled frames automatically.
– Generation of the Wakeup signal

- Test modes
  – Remote loopback, local loopback, automatic echo

33.7.1 Baud Rate Generator

The Baud Rate Generator provides the bit period clock named the Baud Rate Clock to both the receiver and the transmitter.

The Baud Rate Generator clock source can be selected by setting the USCLKS field in the Mode Register (US_MR) between:

- the Master Clock MCK
- a division of the Master Clock, the divider being product dependent, but generally set to 8
- the external clock, available on the SCK pin

The Baud Rate Generator is based upon a 16-bit divider, which is programmed with the CD field of the Baud Rate Generator Register (US_BRGR). If CD is programmed at 0, the Baud Rate Generator does not generate any clock. If CD is programmed at 1, the divider is bypassed and becomes inactive.

If the external SCK clock is selected, the duration of the low and high levels of the signal provided on the SCK pin must be longer than a Master Clock (MCK) period. The frequency of the signal provided on SCK must be at least 4.5 times lower than MCK.

Figure 33-3. Baud Rate Generator

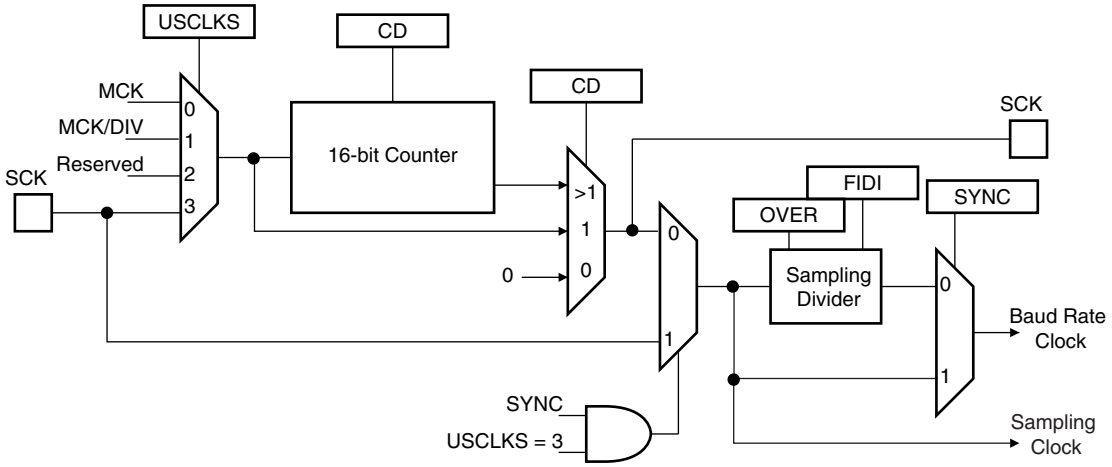

33.7.1.1 Baud Rate in Asynchronous Mode

If the USART is programmed to operate in asynchronous mode, the selected clock is first divided by CD, which is field programmed in the Baud Rate Generator Register (US_BRGR). The resulting clock is provided to the receiver as a sampling clock and then divided by 16 or 8, depending on the programming of the OVER bit in US_MR.

If OVER is set to 1, the receiver sampling is 8 times higher than the baud rate clock. If OVER is cleared, the sampling is performed at 16 times the baud rate clock.

The following formula performs the calculation of the Baud Rate.

$$Baudrate = \frac{SelectedClock}{(8(2-Over)CD)}$$

This gives a maximum baud rate of MCK divided by 8, assuming that MCK is the highest possible clock and that OVER is programmed at 1.

33.7.1.2 Baud Rate Calculation Example

Table 33-5 shows calculations of CD to obtain a baud rate at 38400 bauds for different source clock frequencies. This table also shows the actual resulting baud rate and the error.

Table 33-5. Baud Rate Example (OVER = 0)

Source Clock	Expected Baud Rate	Calculation Result	CD	Actual Baud Rate	Error
MHz	Bit/s			Bit/s	
3 686 400	38 400	6.00	6	38 400.00	0.00%
4 915 200	38 400	8.00	8	38 400.00	0.00%
5 000 000	38 400	8.14	8	39 062.50	1.70%
7 372 800	38 400	12.00	12	38 400.00	0.00%
8 000 000	38 400	13.02	13	38 461.54	0.16%
12 000 000	38 400	19.53	20	37 500.00	2.40%
12 288 000	38 400	20.00	20	38 400.00	0.00%
14 318 180	38 400	23.30	23	38 908.10	1.31%
14 745 600	38 400	24.00	24	38 400.00	0.00%
18 432 000	38 400	30.00	30	38 400.00	0.00%
24 000 000	38 400	39.06	39	38 461.54	0.16%
24 576 000	38 400	40.00	40	38 400.00	0.00%
25 000 000	38 400	40.69	40	38 109.76	0.76%
32 000 000	38 400	52.08	52	38 461.54	0.16%
32 768 000	38 400	53.33	53	38 641.51	0.63%
33 000 000	38 400	53.71	54	38 194.44	0.54%
40 000 000	38 400	65.10	65	38 461.54	0.16%
50 000 000	38 400	81.38	81	38 580.25	0.47%

The baud rate is calculated with the following formula:

$$BaudRate = MCK/CD \times 16$$

The baud rate error is calculated with the following formula. It is not recommended to work with an error higher than 5%.

$$Error = 1 - \left(\frac{ExpectedBaudRate}{ActualBaudRate}\right)$$

33.7.1.3 Fractional Baud Rate in Asynchronous Mode

The Baud Rate generator previously defined is subject to the following limitation: the output frequency changes by only integer multiples of the reference frequency. An approach to this problem is to integrate a fractional N clock generator that has a high resolution. The generator architecture is modified to obtain Baud Rate changes by a fraction of the reference source clock. This fractional part is programmed with the FP field in the Baud Rate Generator Register (US_BRGR). If FP is not 0, the fractional part is activated. The resolution is one eighth of the clock divider.

This feature is only available when using USART normal mode. The fractional Baud Rate is calculated using the following formula:

$$Baudrate = \frac{SelectedClock}{\left(8(2-Over)\left(CD+\frac{FP}{8}\right)\right)}$$

The modified architecture is presented below:

Figure 33-4. Fractional Baud Rate Generator

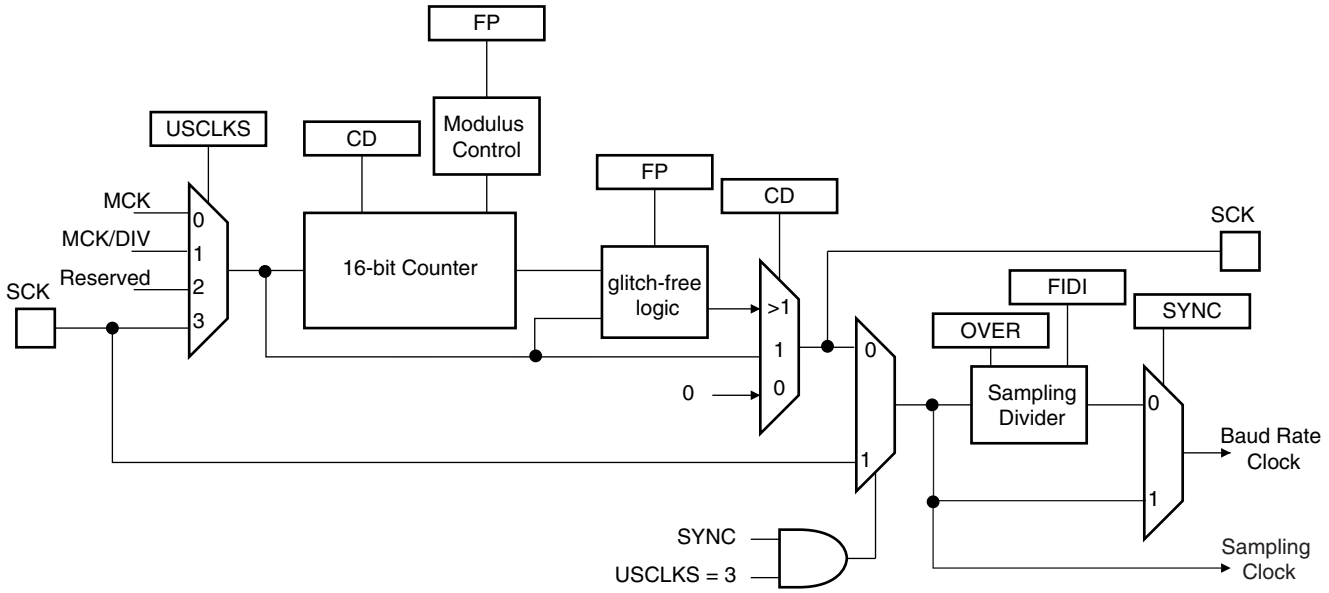

33.7.1.4 *Baud Rate in Synchronous Mode or SPI Mode*

If the USART is programmed to operate in synchronous mode, the selected clock is simply divided by the field CD in US_BRGR.

$$BaudRate = \frac{SelectedClock}{CD}$$

In synchronous mode, if the external clock is selected (USCLKS = 3), the clock is provided directly by the signal on the USART SCK pin. No division is active. The value written in US_BRGR has no effect. The external clock frequency must be at least 4.5 times lower than the system clock. In synchronous mode master (USCLKS = 0 or 1, CLK0 set to 1), the receive part limits the SCK maximum frequency to MCK/4.5,

When either the external clock SCK or the internal clock divided (MCK/DIV) is selected, the value programmed in CD must be even if the user has to ensure a 50:50 mark/space ratio on the SCK pin. If the internal clock MCK is selected, the Baud Rate Generator ensures a 50:50 duty cycle on the SCK pin, even if the value programmed in CD is odd.

33.7.1.5 Baud Rate in ISO 7816 Mode

The ISO7816 specification defines the bit rate with the following formula:

$$B = \frac{Di}{Fi} \times f$$

where:

- B is the bit rate
- Di is the bit-rate adjustment factor
- Fi is the clock frequency division factor
- f is the ISO7816 clock frequency (Hz)

Di is a binary value encoded on a 4-bit field, named DI, as represented in Table 33-6.

Table 33-6. Binary and Decimal Values for Di

DI field	0001	0010	0011	0100	0101	0110	1000	1001
Di (decimal)	1	2	4	8	16	32	12	20

Fi is a binary value encoded on a 4-bit field, named FI, as represented in Table 33-7.

Table 33-7. Binary and Decimal Values for Fi

FI field	0000	0001	0010	0011	0100	0101	0110	1001	1010	1011	1100	1101
Fi (decimal	372	372	558	744	1116	1488	1860	512	768	1024	1536	2048

Table 33-8 shows the resulting Fi/Di Ratio, which is the ratio between the ISO7816 clock and the baud rate clock.

Table 33-8. Possible Values for the Fi/Di Ratio

Fi/Di	372	558	774	1116	1488	1806	512	768	1024	1536	2048
1	372	558	744	1116	1488	1860	512	768	1024	1536	2048
2	186	279	372	558	744	930	256	384	512	768	1024
4	93	139.5	186	279	372	465	128	192	256	384	512
8	46.5	69.75	93	139.5	186	232.5	64	96	128	192	256
16	23.25	34.87	46.5	69.75	93	116.2	32	48	64	96	128
32	11.62	17.43	23.25	34.87	46.5	58.13	16	24	32	48	64
12	31	46.5	62	93	124	155	42.66	64	85.33	128	170.6
20	18.6	27.9	37.2	55.8	74.4	93	25.6	38.4	51.2	76.8	102.4

If the USART is configured in ISO7816 Mode, the clock selected by the USCLKS field in the Mode Register (US_MR) is first divided by the value programmed in the field CD in the Baud Rate Generator Register (US_BRGR). The resulting clock can be provided to the SCK pin to feed the smart card clock inputs. This means that the CLKO bit can be set in US_MR.

This clock is then divided by the value programmed in the FI_DI_RATIO field in the FI_DI_Ratio register (US_FIDI). This is performed by the Sampling Divider, which performs a division by up to 2047 in ISO7816 Mode. The non-integer values of the Fi/Di Ratio are not supported and the user must program the FI_DI_RATIO field to a value as close as possible to the expected value.

The FI_DI_RATIO field resets to the value 0x174 (372 in decimal) and is the most common divider between the ISO7816 clock and the bit rate (Fi = 372, Di = 1).

Figure 33-5 shows the relation between the Elementary Time Unit, corresponding to a bit time, and the ISO 7816 clock.

Figure 33-5. Elementary Time Unit (ETU)

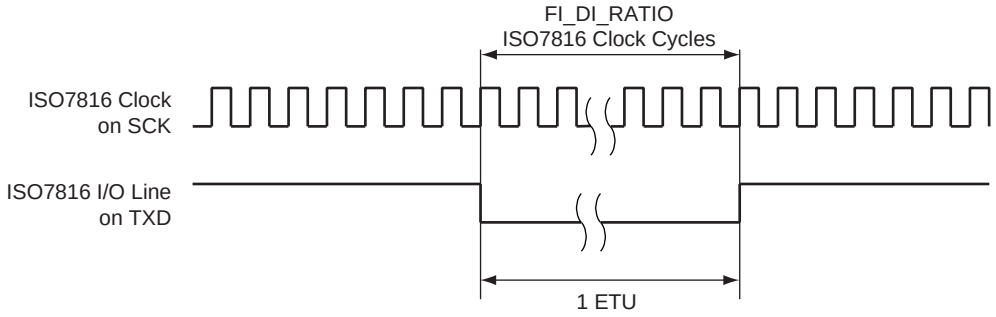

33.7.2 Receiver and Transmitter Control

After reset, the receiver is disabled. The user must enable the receiver by setting the RXEN bit in the Control Register (US_CR). However, the receiver registers can be programmed before the receiver clock is enabled.

After reset, the transmitter is disabled. The user must enable it by setting the TXEN bit in the Control Register (US_CR). However, the transmitter registers can be programmed before being enabled.

The Receiver and the Transmitter can be enabled together or independently.

At any time, the software can perform a reset on the receiver or the transmitter of the USART by setting the corresponding bit, RSTRX and RSTTX respectively, in the Control Register (US_CR). The software resets clear the status flag and reset internal state machines but the user interface configuration registers hold the value configured prior to software reset. Regardless of what the receiver or the transmitter is performing, the communication is immediately stopped.

The user can also independently disable the receiver or the transmitter by setting RXDIS and TXDIS respectively in US_CR. If the receiver is disabled during a character reception, the USART waits until the end of reception of the current character, then the reception is stopped. If the transmitter is disabled while it is operating, the USART waits the end of transmission of both the current character and character being stored in the Transmit Holding Register (US_THR). If a timeguard is programmed, it is handled normally.

33.7.3 Synchronous and Asynchronous Modes

33.7.3.1 Transmitter Operations

The transmitter performs the same in both synchronous and asynchronous operating modes (SYNC = 0 or SYNC = 1). One start bit, up to 9 data bits, one optional parity bit and up to two stop bits are successively shifted out on the TXD pin at each falling edge of the programmed serial clock.

The number of data bits is selected by the CHRL field and the MODE 9 bit in the Mode Register (US_MR). Nine bits are selected by setting the MODE 9 bit regardless of the CHRL field. The parity bit is set according to the PAR field in US_MR. The even, odd, space, marked or none parity bit can be configured. The MSBF field in US_MR configures which data bit is sent first. If written at 1, the most significant bit is sent first. At 0, the less significant bit is sent first. The number of stop bits is selected by the NBSTOP field in US_MR. The 1.5 stop bit is supported in asynchronous mode only.

Figure 33-6. Character Transmit

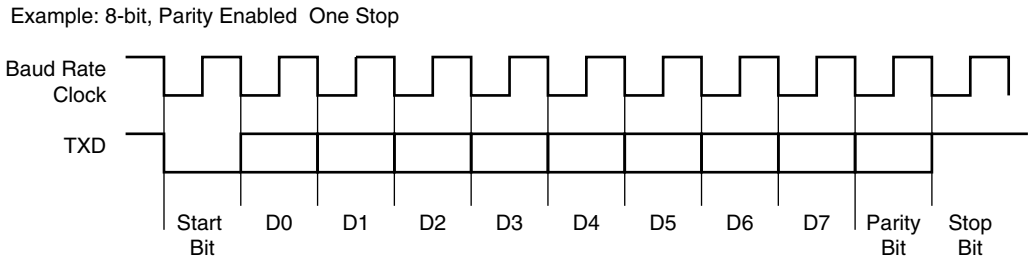

The characters are sent by writing in the Transmit Holding Register (US_THR). The transmitter reports two status bits in the Channel Status Register (US_CSR): TXRDY (Transmitter Ready), which indicates that US_THR is empty and TXEMPTY, which indicates that all the characters written in US_THR have been processed. When the current character processing is completed, the last character written in US_THR is transferred into the Shift Register of the transmitter and US_THR becomes empty, thus TXRDY rises.

Both TXRDY and TXEMPTY bits are low when the transmitter is disabled. Writing a character in US_THR while TXRDY is low has no effect and the written character is lost.

Figure 33-7. Transmitter Status

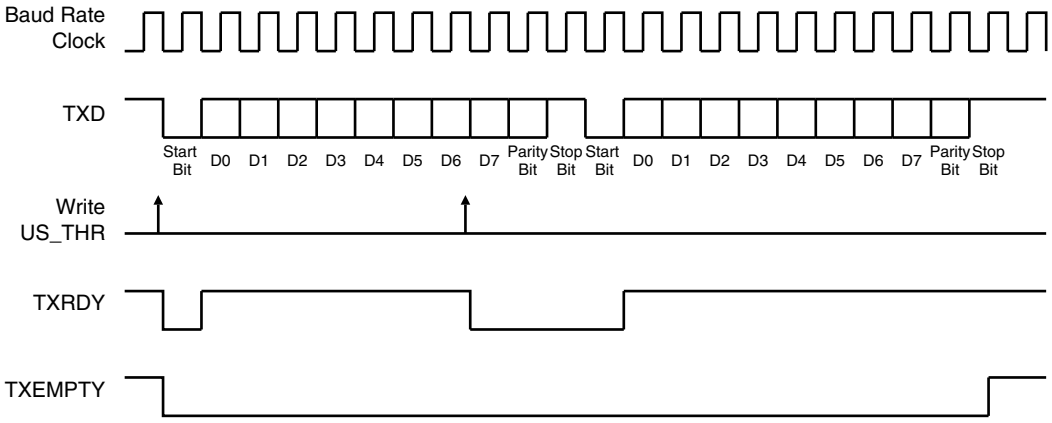

33.7.3.2 Manchester Encoder

When the Manchester encoder is in use, characters transmitted through the USART are encoded based on biphase Manchester II format. To enable this mode, set the MAN field in the US_MR register to 1. Depending on polarity configuration, a logic level (zero or one), is transmitted as a coded signal one-to-zero or zero-to-one. Thus, a transition always occurs at the midpoint of each bit time. It consumes more bandwidth than the original NRZ signal (2x) but the receiver has more error control since the expected input must show a change at the center of a bit cell. An example of Manchester encoded sequence is: the byte 0xB1 or 10110001 encodes to 10 01 10 10 01 01 01 10, assuming the default polarity of the encoder. Figure 33-8 illustrates this coding scheme.

Figure 33-8. NRZ to Manchester Encoding

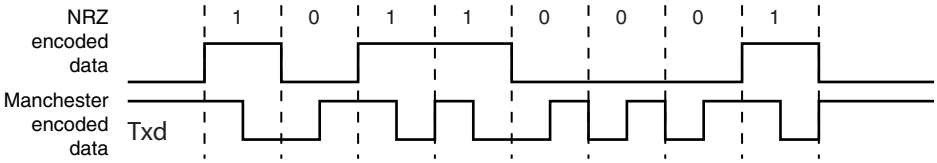

The Manchester encoded character can also be encapsulated by adding both a configurable preamble and a start frame delimiter pattern. Depending on the configuration, the preamble is a training sequence, composed of a pre-

defined pattern with a programmable length from 1 to 15 bit times. If the preamble length is set to 0, the preamble waveform is not generated prior to any character. The preamble pattern is chosen among the following sequences: ALL_ONE, ALL_ZERO, ONE_ZERO or ZERO_ONE, writing the field TX_PP in the US_MAN register, the field TX_PL is used to configure the preamble length. Figure 33-9 illustrates and defines the valid patterns. To improve flexibility, the encoding scheme can be configured using the TX_MPOL field in the US_MAN register. If the TX_MPOL field is set to zero (default), a logic zero is encoded with a zero-to-one transition and a logic one is encoded with a one-to-zero transition. If the TX_MPOL field is set to one, a logic one is encoded with a one-to-zero transition and a logic zero is encoded with a zero-to-one transition.

Figure 33-9. Preamble Patterns, Default Polarity Assumed

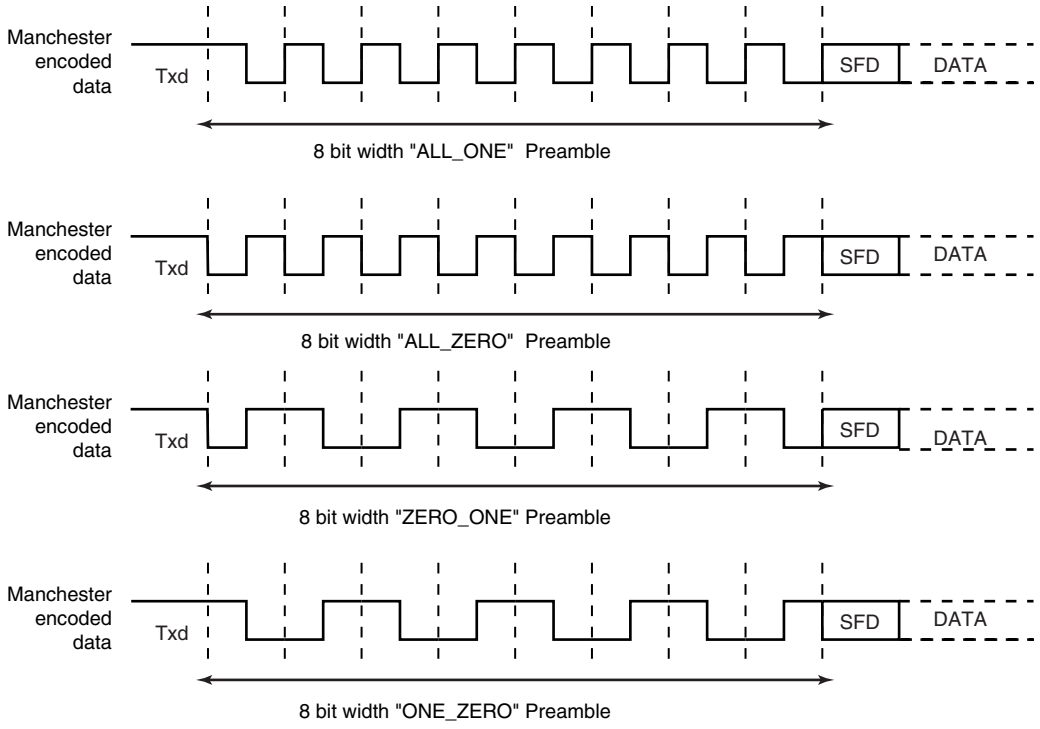

A start frame delimiter is to be configured using the ONEBIT field in the US_MR register. It consists of a user-defined pattern that indicates the beginning of a valid data. Figure 33-10 illustrates these patterns. If the start frame delimiter, also known as start bit, is one bit, (ONEBIT at 1), a logic zero is Manchester encoded and indicates that a new character is being sent serially on the line. If the start frame delimiter is a synchronization pattern also referred to as sync (ONEBIT at 0), a sequence of 3 bit times is sent serially on the line to indicate the start of a new character. The sync waveform is in itself an invalid Manchester waveform as the transition occurs at the middle of the second bit time. Two distinct sync patterns are used: the command sync and the data sync. The command sync has a logic one level for one and a half bit times, then a transition to logic zero for the second one and a half bit times. If the MODSYNC field in the US_MR register is set to 1, the next character is a command. If it is set to 0, the next character is a data. When direct memory access is used, the MODSYNC field can be immediately updated with a modified character located in memory. To enable this mode, VAR_SYNC field in US_MR register must be set to 1. In this case, the MODSYNC field in US_MR is bypassed and the sync configuration is held in the TXSYNH in the US_THR register. The USART character format is modified and includes sync information.

Figure 33-10. Start Frame Delimiter

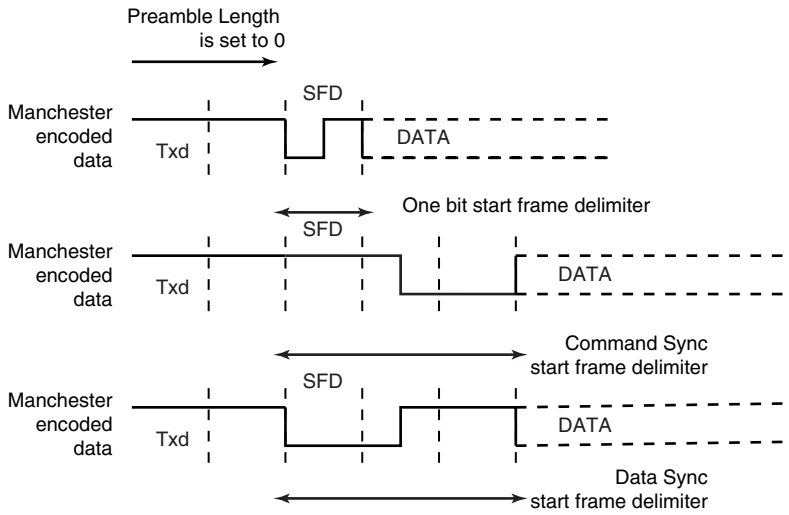

33.7.3.3 *Drift Compensation*

Drift compensation is available only in 16X oversampling mode. An hardware recovery system allows a larger clock drift. To enable the hardware system, the bit in the USART_MAN register must be set. If the RXD edge is one 16X clock cycle from the expected edge, this is considered as normal jitter and no corrective actions is taken. If the RXD event is between 4 and 2 clock cycles before the expected edge, then the current period is shortened by one clock cycle. If the RXD event is between 2 and 3 clock cycles after the expected edge, then the current period is lengthened by one clock cycle. These intervals are considered to be drift and so corrective actions are automatically taken.

Figure 33-11. Bit Resynchronization

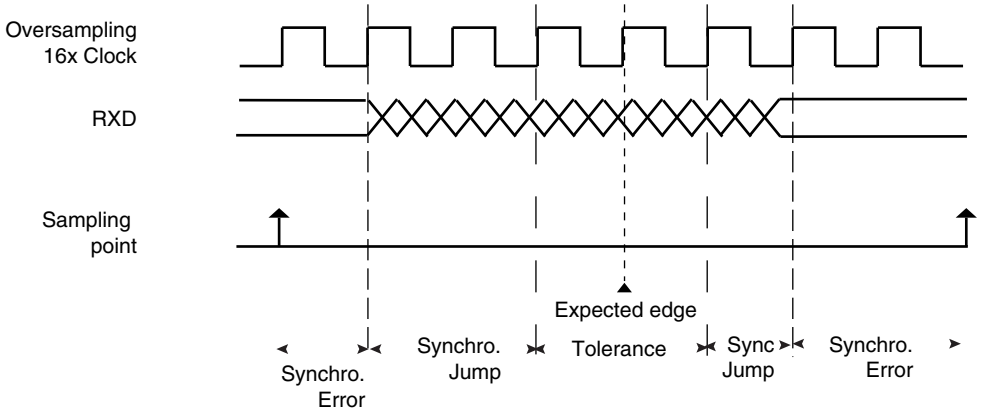

33.7.3.4 *Asynchronous Receiver*

If the USART is programmed in asynchronous operating mode (SYNC = 0), the receiver oversamples the RXD input line. The oversampling is either 16 or 8 times the Baud Rate clock, depending on the OVER bit in the Mode Register (US_MR).

The receiver samples the RXD line. If the line is sampled during one half of a bit time at 0, a start bit is detected and data, parity and stop bits are successively sampled on the bit rate clock.

If the oversampling is 16, (OVER at 0), a start is detected at the eighth sample at 0. Then, data bits, parity bit and stop bit are sampled on each 16 sampling clock cycle. If the oversampling is 8 (OVER at 1), a start bit is detected at the fourth sample at 0. Then, data bits, parity bit and stop bit are sampled on each 8 sampling clock cycle.

The number of data bits, first bit sent and parity mode are selected by the same fields and bits as the transmitter, i.e. respectively CHRL, MODE9, MSBF and PAR. For the synchronization mechanism **only**, the number of stop bits has no effect on the receiver as it considers only one stop bit, regardless of the field NBSTOP, so that resynchronization between the receiver and the transmitter can occur. Moreover, as soon as the stop bit is sampled, the receiver starts looking for a new start bit so that resynchronization can also be accomplished when the transmitter is operating with one stop bit.

Figure 33-12 and Figure 33-13 illustrate start detection and character reception when USART operates in asynchronous mode.

Figure 33-12. Asynchronous Start Detection

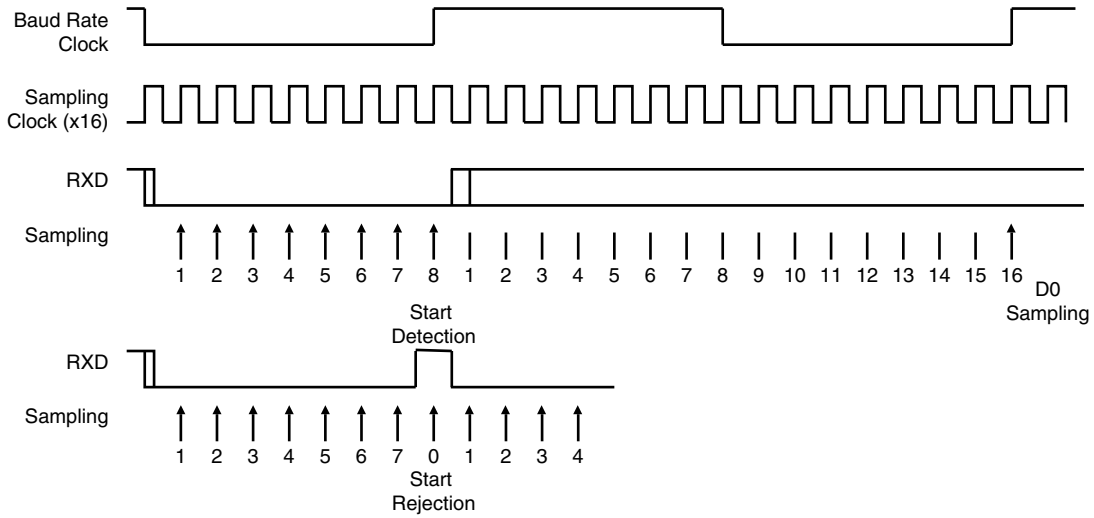

Figure 33-13. Asynchronous Character Reception

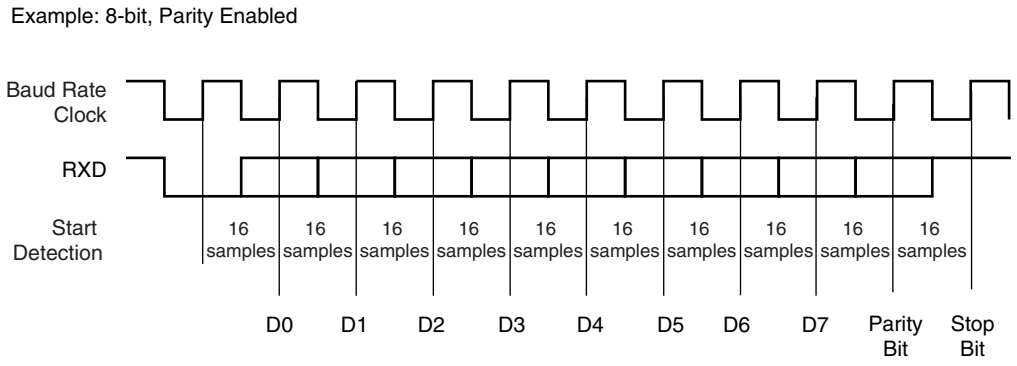

33.7.3.5 Manchester Decoder

When the MAN field in US_MR register is set to 1, the Manchester decoder is enabled. The decoder performs both preamble and start frame delimiter detection. One input line is dedicated to Manchester encoded input data.

An optional preamble sequence can be defined, its length is user-defined and totally independent of the emitter side. Use RX_PL in US_MAN register to configure the length of the preamble sequence. If the length is set to 0, no preamble is detected and the function is disabled. In addition, the polarity of the input stream is programmable with

RX_MPOL field in US_MAN register. Depending on the desired application the preamble pattern matching is to be defined via the RX_PP field in US_MAN. See Figure 33-9 for available preamble patterns.

Unlike preamble, the start frame delimiter is shared between Manchester Encoder and Decoder. So, if ONEBIT field is set to 1, only a zero encoded Manchester can be detected as a valid start frame delimiter. If ONEBIT is set to 0, only a sync pattern is detected as a valid start frame delimiter. Decoder operates by detecting transition on incoming stream. If RXD is sampled during one quarter of a bit time at zero, a start bit is detected. See Figure 33-14. The sample pulse rejection mechanism applies.

Figure 33-14. Asynchronous Start Bit Detection

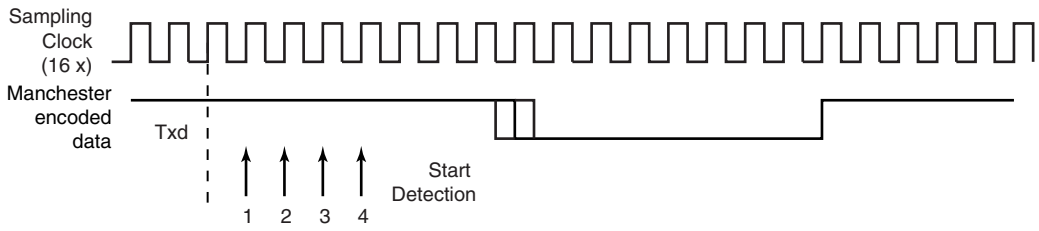

The receiver is activated and starts Preamble and Frame Delimiter detection, sampling the data at one quarter and then three quarters. If a valid preamble pattern or start frame delimiter is detected, the receiver continues decoding with the same synchronization. If the stream does not match a valid pattern or a valid start frame delimiter, the receiver re-synchronizes on the next valid edge.The minimum time threshold to estimate the bit value is three quarters of a bit time.

If a valid preamble (if used) followed with a valid start frame delimiter is detected, the incoming stream is decoded into NRZ data and passed to USART for processing. Figure 33-15 illustrates Manchester pattern mismatch. When incoming data stream is passed to the USART, the receiver is also able to detect Manchester code violation. A code violation is a lack of transition in the middle of a bit cell. In this case, MANE flag in US_CSR register is raised. It is cleared by writing the Control Register (US_CR) with the RSTSTA bit at 1. See Figure 33-16 for an example of Manchester error detection during data phase.

Figure 33-15. Preamble Pattern Mismatch

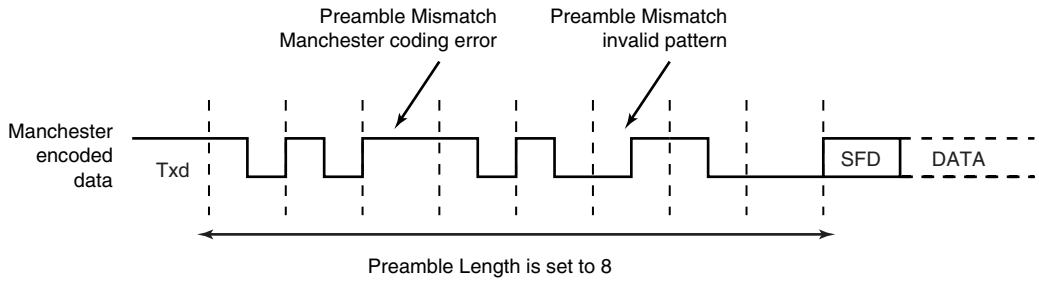

Figure 33-16. Manchester Error Flag

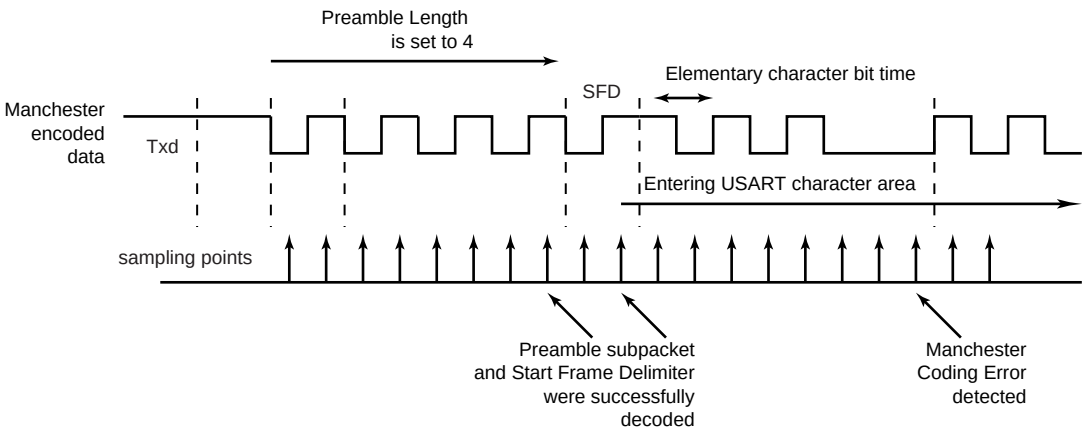

When the start frame delimiter is a sync pattern (ONEBIT field at 0), both command and data delimiter are supported. If a valid sync is detected, the received character is written as RXCHR field in the US_RHR register and the RXSYNH is updated. RXCHR is set to 1 when the received character is a command, and it is set to 0 if the received character is a data. This mechanism alleviates and simplifies the direct memory access as the character contains its own sync field in the same register.

As the decoder is setup to be used in unipolar mode, the first bit of the frame has to be a zero-to-one transition.

33.7.3.6 Radio Interface: Manchester Encoded USART Application

This section describes low data rate RF transmission systems and their integration with a Manchester encoded USART. These systems are based on transmitter and receiver ICs that support ASK and FSK modulation schemes.

The goal is to perform full duplex radio transmission of characters using two different frequency carriers. See the configuration in Figure 33-17.

Figure 33-17. Manchester Encoded Characters RF Transmission

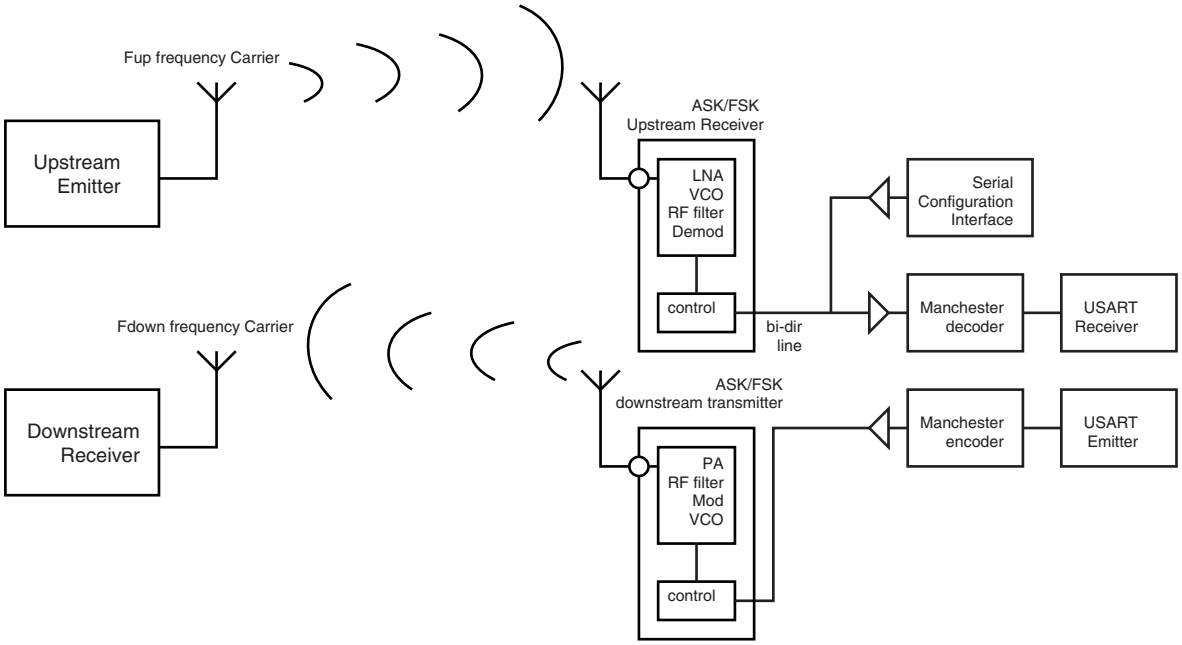

The USART module is configured as a Manchester encoder/decoder. Looking at the downstream communication channel, Manchester encoded characters are serially sent to the RF emitter. This may also include a user defined preamble and a start frame delimiter. Mostly, preamble is used in the RF receiver to distinguish between a valid data from a transmitter and signals due to noise. The Manchester stream is then modulated. See Figure 33-18 for an example of ASK modulation scheme. When a logic one is sent to the ASK modulator, the power amplifier, referred to as PA, is enabled and transmits an RF signal at downstream frequency. When a logic zero is transmitted, the RF signal is turned off. If the FSK modulator is activated, two different frequencies are used to transmit data. When a logic 1 is sent, the modulator outputs an RF signal at frequency F0 and switches to F1 if the data sent is a 0. See Figure 33-19.

From the receiver side, another carrier frequency is used. The RF receiver performs a bit check operation examining demodulated data stream. If a valid pattern is detected, the receiver switches to receiving mode. The demodulated stream is sent to the Manchester decoder. Because of bit checking inside RF IC, the data transferred to the microcontroller is reduced by a user-defined number of bits. The Manchester preamble length is to be defined in accordance with the RF IC configuration.

Figure 33-18. ASK Modulator Output

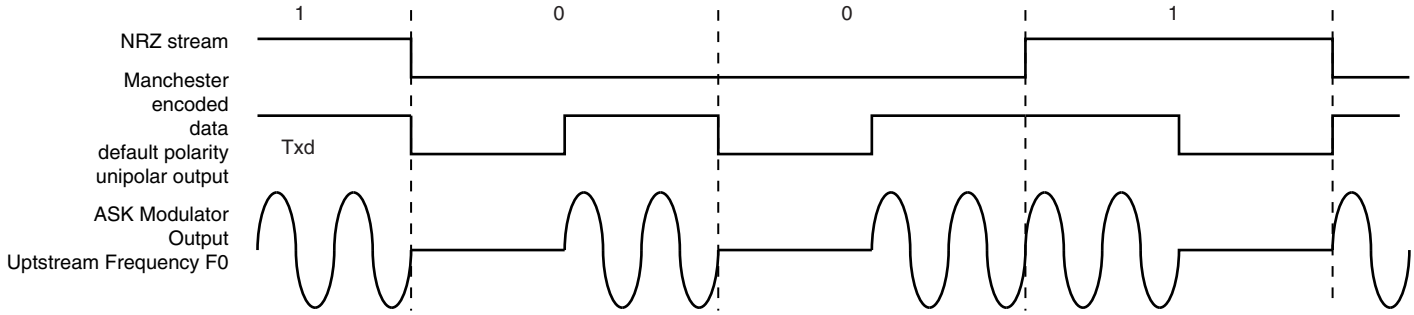

Figure 33-19. FSK Modulator Output

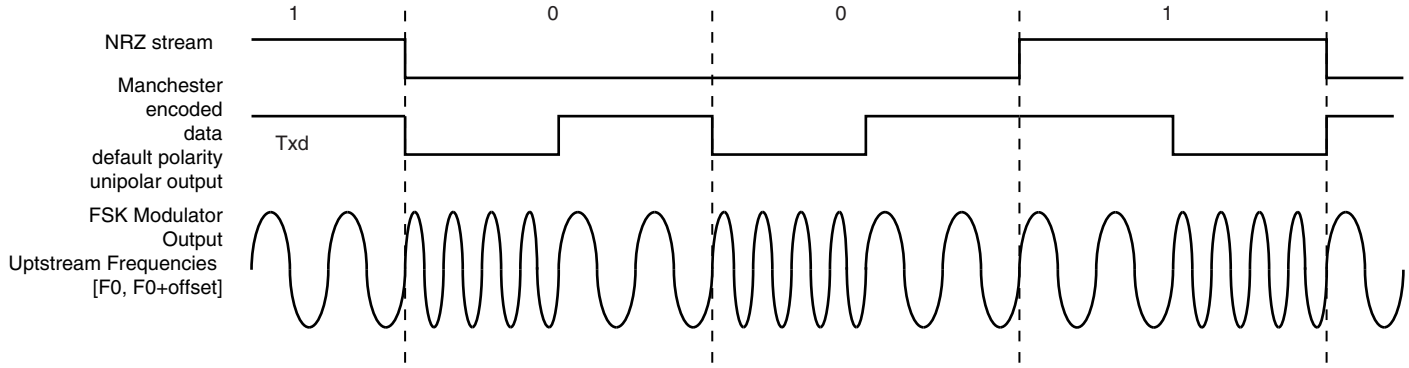

33.7.3.7 *Synchronous Receiver*

In synchronous mode (SYNC = 1), the receiver samples the RXD signal on each rising edge of the Baud Rate Clock. If a low level is detected, it is considered as a start. All data bits, the parity bit and the stop bits are sampled and the receiver waits for the next start bit. Synchronous mode operations provide a high speed transfer capability.

Configuration fields and bits are the same as in asynchronous mode.

Figure 33-20 illustrates a character reception in synchronous mode.

Figure 33-20. Synchronous Mode Character Reception

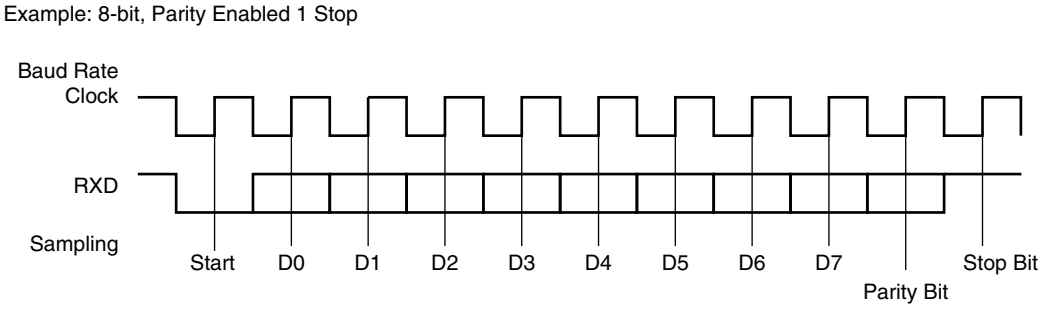

33.7.3.8 *Receiver Operations*

When a character reception is completed, it is transferred to the Receive Holding Register (US_RHR) and the RXRDY bit in the Status Register (US_CSR) rises. If a character is completed while the RXRDY is set, the OVRE (Overrun Error) bit is set. The last character is transferred into US_RHR and overwrites the previous one. The OVRE bit is cleared by writing the Control Register (US_CR) with the RSTSTA (Reset Status) bit at 1.

Figure 33-21. Receiver Status

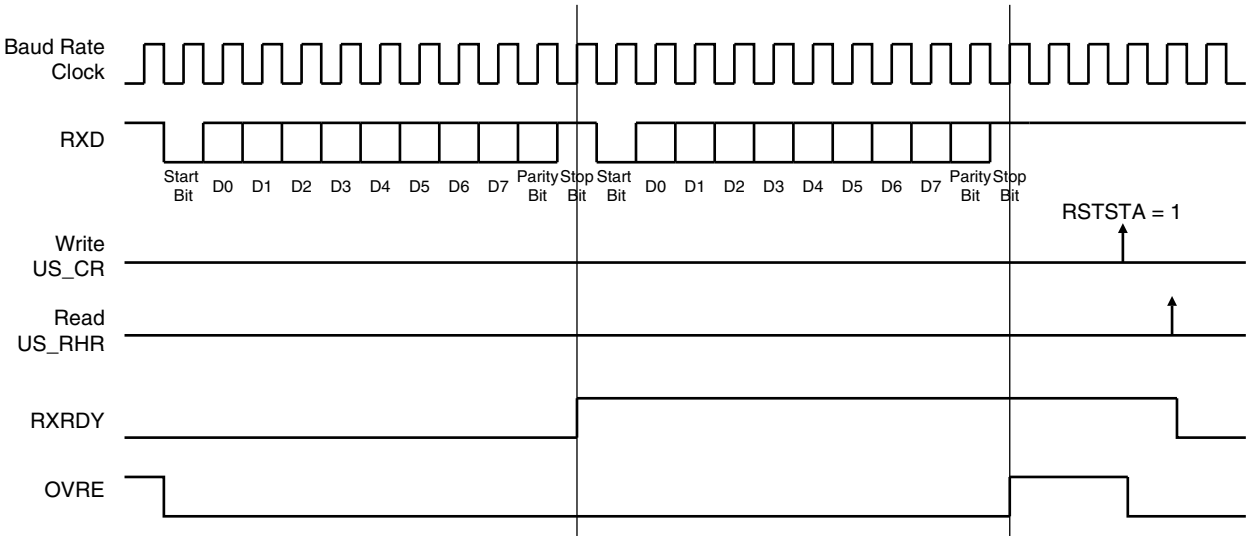

33.7.3.9 Parity

The USART supports five parity modes selected by programming the PAR field in the Mode Register (US_MR). The PAR field also enables the Multidrop mode, see "Multidrop Mode" on page 567. Even and odd parity bit generation and error detection are supported.

If even parity is selected, the parity generator of the transmitter drives the parity bit at 0 if a number of 1s in the character data bit is even, and at 1 if the number of 1s is odd. Accordingly, the receiver parity checker counts the number of received 1s and reports a parity error if the sampled parity bit does not correspond. If odd parity is selected, the parity generator of the transmitter drives the parity bit at 1 if a number of 1s in the character data bit is even, and at 0 if the number of 1s is odd. Accordingly, the receiver parity checker counts the number of received 1s and reports a parity error if the sampled parity bit does not correspond. If the mark parity is used, the parity generator of the transmitter drives the parity bit at 1 for all characters. The receiver parity checker reports an error if the parity bit is sampled at 0. If the space parity is used, the parity generator of the transmitter drives the parity bit at 0 for all characters. The receiver parity checker reports an error if the parity bit is sampled at 1. If parity is disabled, the transmitter does not generate any parity bit and the receiver does not report any parity error.

Table 33-9 shows an example of the parity bit for the character 0x41 (character ASCII "A") depending on the configuration of the USART. Because there are two bits at 1, 1 bit is added when a parity is odd, or 0 is added when a parity is even.

Table 33-9. Parity Bit Examples

Character	Hexa	Binary	Parity Bit	Parity Mode
A	0x41	0100 0001	1	Odd
A	0x41	0100 0001	0	Even
A	0x41	0100 0001	1	Mark
A	0x41	0100 0001	0	Space
A	0x41	0100 0001	None	None

When the receiver detects a parity error, it sets the PARE (Parity Error) bit in the Channel Status Register (US_CSR). The PARE bit can be cleared by writing the Control Register (US_CR) with the RSTSTA bit at 1. Figure 33-22 illustrates the parity bit status setting and clearing.

Figure 33-22. Parity Error

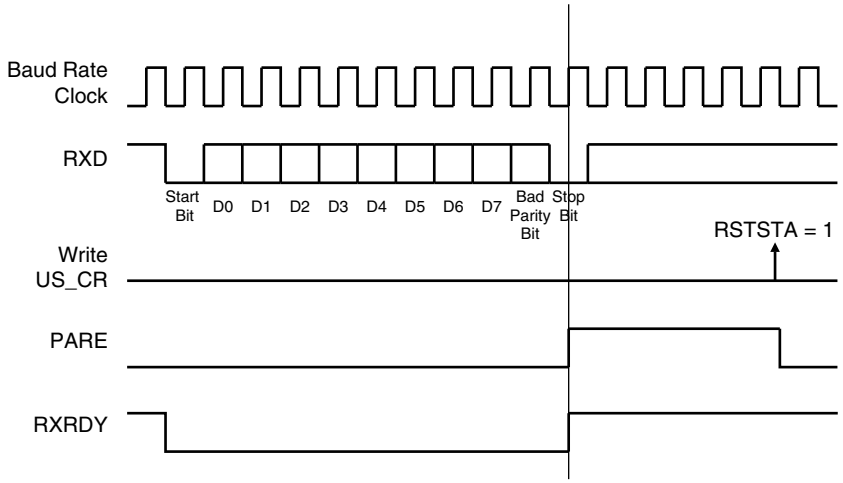

33.7.3.10 Multidrop Mode

If the PAR field in the Mode Register (US_MR) is programmed to the value 0x6 or 0x07, the USART runs in Multidrop Mode. This mode differentiates the data characters and the address characters. Data is transmitted with the parity bit at 0 and addresses are transmitted with the parity bit at 1.

If the USART is configured in multidrop mode, the receiver sets the PARE parity error bit when the parity bit is high and the transmitter is able to send a character with the parity bit high when the Control Register is written with the SENDA bit at 1.

To handle parity error, the PARE bit is cleared when the Control Register is written with the bit RSTSTA at 1.

The transmitter sends an address byte (parity bit set) when SENDA is written to US_CR. In this case, the next byte written to US_THR is transmitted as an address. Any character written in US_THR without having written the command SENDA is transmitted normally with the parity at 0.

33.7.3.11 Transmitter Timeguard

The timeguard feature enables the USART interface with slow remote devices.

The timeguard function enables the transmitter to insert an idle state on the TXD line between two characters. This idle state actually acts as a long stop bit.

The duration of the idle state is programmed in the TG field of the Transmitter Timeguard Register (US_TTGR). When this field is programmed at zero no timeguard is generated. Otherwise, the transmitter holds a high level on TXD after each transmitted byte during the number of bit periods programmed in TG in addition to the number of stop bits.

As illustrated in Figure 33-23, the behavior of TXRDY and TXEMPTY status bits is modified by the programming of a timeguard. TXRDY rises only when the start bit of the next character is sent, and thus remains at 0 during the timeguard transmission if a character has been written in US_THR. TXEMPTY remains low until the timeguard transmission is completed as the timeguard is part of the current character being transmitted.

Figure 33-23. Timeguard Operations

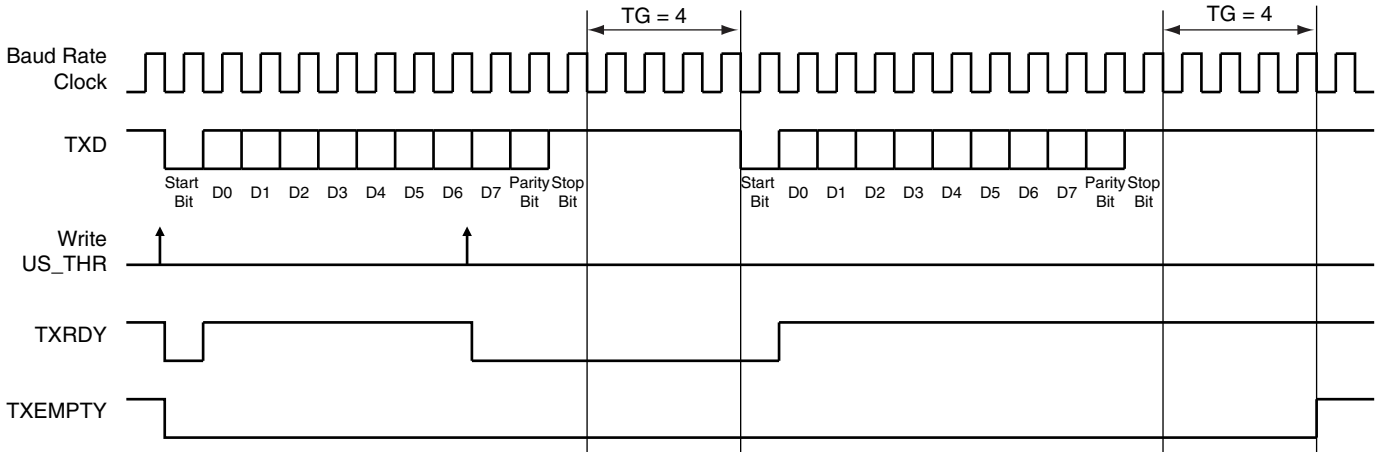

Table 33-10 indicates the maximum length of a timeguard period that the transmitter can handle in relation to the function of the Baud Rate.

Table 33-10. Maximum Timeguard Length Depending on Baud Rate

Baud Rate	Bit time	Timeguard
Bit/sec	µs	ms
1 200	833	212.50
9 600	104	26.56
14400	69.4	17.71
19200	52.1	13.28
28800	34.7	8.85
33400	29.9	7.63
56000	17.9	4.55
57600	17.4	4.43
115200	8.7	2.21

33.7.3.12 Receiver Time-out

The Receiver Time-out provides support in handling variable-length frames. This feature detects an idle condition on the RXD line. When a time-out is detected, the bit TIMEOUT in the Channel Status Register (US_CSR) rises and can generate an interrupt, thus indicating to the driver an end of frame.

The time-out delay period (during which the receiver waits for a new character) is programmed in the TO field of the Receiver Time-out Register (US_RTOR). If the TO field is programmed at 0, the Receiver Time-out is disabled and no time-out is detected. The TIMEOUT bit in US_CSR remains at 0. Otherwise, the receiver loads a 16-bit counter with the value programmed in TO. This counter is decremented at each bit period and reloaded each time a new character is received. If the counter reaches 0, the TIMEOUT bit in the Status Register rises. Then, the user can either:

- Stop the counter clock until a new character is received. This is performed by writing the Control Register (US_CR) with the STTTO (Start Time-out) bit at 1. In this case, the idle state on RXD before a new character is received will not provide a time-out. This prevents having to handle an interrupt before a character is received and allows waiting for the next idle state on RXD after a frame is received.
- Obtain an interrupt while no character is received. This is performed by writing US_CR with the RETTO (Reload and Start Time-out) bit at 1. If RETTO is performed, the counter starts counting down immediately from the value TO. This enables generation of a periodic interrupt so that a user time-out can be handled, for example when no key is pressed on a keyboard.

If STTTO is performed, the counter clock is stopped until a first character is received. The idle state on RXD before the start of the frame does not provide a time-out. This prevents having to obtain a periodic interrupt and enables a wait of the end of frame when the idle state on RXD is detected.

If RETTO is performed, the counter starts counting down immediately from the value TO. This enables generation of a periodic interrupt so that a user time-out can be handled, for example when no key is pressed on a keyboard.

Figure 33-24 shows the block diagram of the Receiver Time-out feature.

Figure 33-24. Receiver Time-out Block Diagram

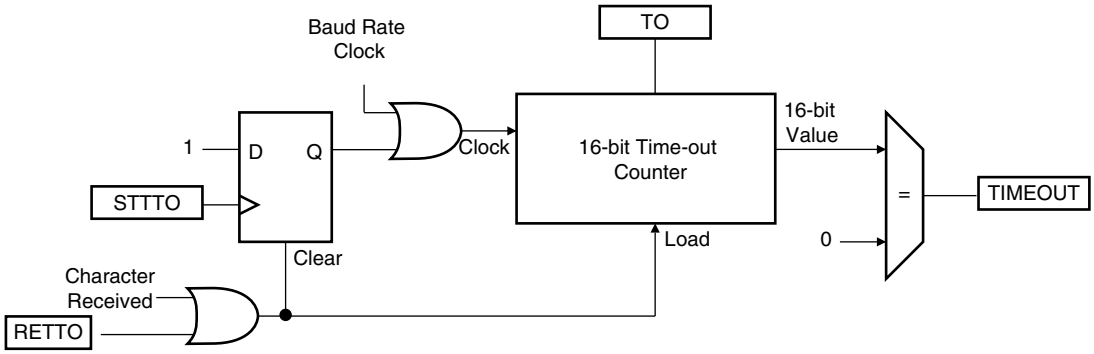

Table 33-11 gives the maximum time-out period for some standard baud rates.

Table 33-11. Maximum Time-out Period

Baud Rate	Bit Time	Time-out
bit/sec	µs	ms
600	1 667	109 225
1 200	833	54 613
2 400	417	27 306
4 800	208	13 653
9 600	104	6 827
14400	69	4 551
19200	52	3 413
28800	35	2 276
33400	30	1 962
56000	18	1 170
57600	17	1 138
200000	5	328

33.7.3.13 Framing Error

The receiver is capable of detecting framing errors. A framing error happens when the stop bit of a received character is detected at level 0. This can occur if the receiver and the transmitter are fully desynchronized.

A framing error is reported on the FRAME bit of the Channel Status Register (US_CSR). The FRAME bit is asserted in the middle of the stop bit as soon as the framing error is detected. It is cleared by writing the Control Register (US_CR) with the RSTSTA bit at 1.

Figure 33-25. Framing Error Status

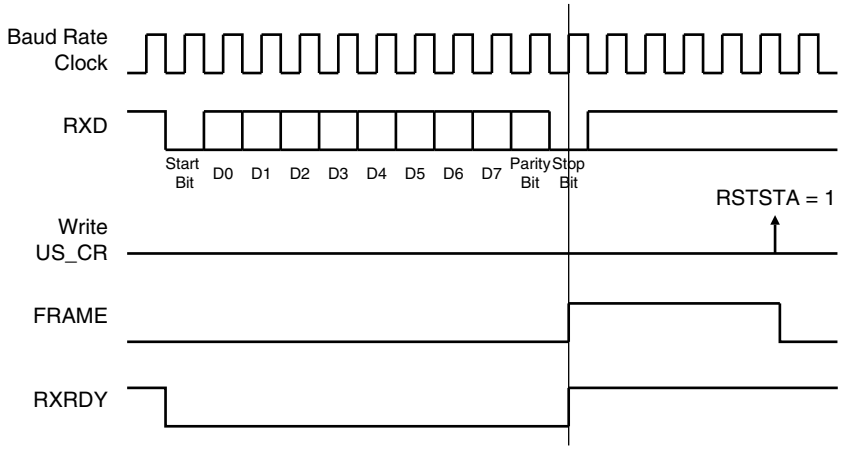

33.7.3.14 *Transmit Break*

The user can request the transmitter to generate a break condition on the TXD line. A break condition drives the TXD line low during at least one complete character. It appears the same as a 0x00 character sent with the parity and the stop bits at 0. However, the transmitter holds the TXD line at least during one character until the user requests the break condition to be removed.

A break is transmitted by writing the Control Register (US_CR) with the STTBRK bit at 1. This can be performed at any time, either while the transmitter is empty (no character in either the Shift Register or in US_THR) or when a character is being transmitted. If a break is requested while a character is being shifted out, the character is first completed before the TXD line is held low.

Once STTBRK command is requested further STTBRK commands are ignored until the end of the break is completed.

The break condition is removed by writing US_CR with the STPBRK bit at 1. If the STPBRK is requested before the end of the minimum break duration (one character, including start, data, parity and stop bits), the transmitter ensures that the break condition completes.

The transmitter considers the break as though it is a character, i.e. the STTBRK and STPBRK commands are taken into account only if the TXRDY bit in US_CSR is at 1 and the start of the break condition clears the TXRDY and TXEMPTY bits as if a character is processed.

Writing US_CR with the both STTBRK and STPBRK bits at 1 can lead to an unpredictable result. All STPBRK commands requested without a previous STTBRK command are ignored. A byte written into the Transmit Holding Register while a break is pending, but not started, is ignored.

After the break condition, the transmitter returns the TXD line to 1 for a minimum of 12 bit times. Thus, the transmitter ensures that the remote receiver detects correctly the end of break and the start of the next character. If the timeguard is programmed with a value higher than 12, the TXD line is held high for the timeguard period.

After holding the TXD line for this period, the transmitter resumes normal operations.

Figure 33-26 illustrates the effect of both the Start Break (STTBRK) and Stop Break (STPBRK) commands on the TXD line.

Figure 33-26. Break Transmission

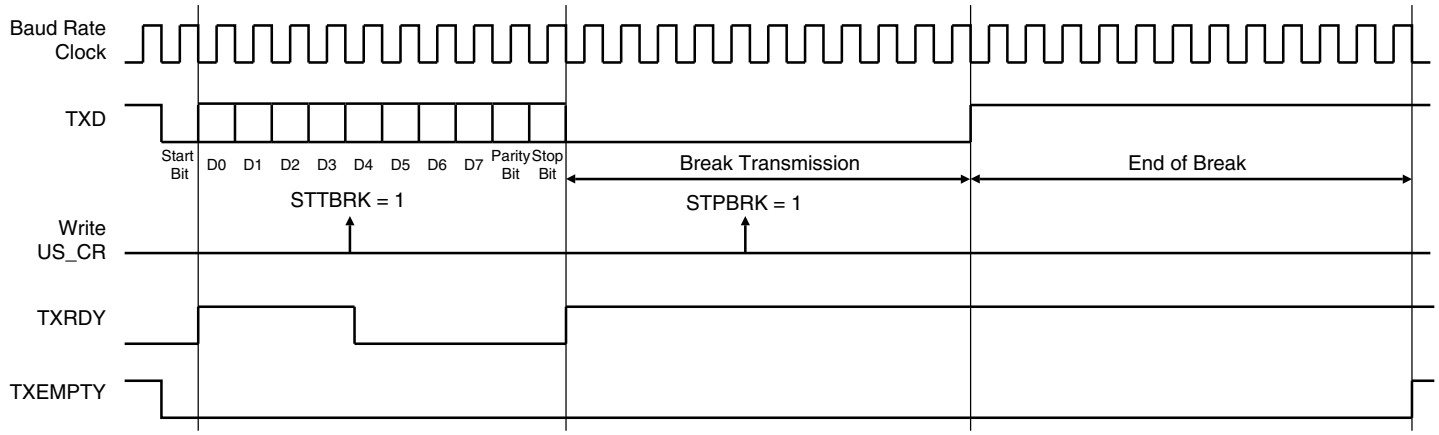

33.7.3.15 *Receive Break*

The receiver detects a break condition when all data, parity and stop bits are low. This corresponds to detecting a framing error with data at 0x00, but FRAME remains low.

When the low stop bit is detected, the receiver asserts the RXBRK bit in US_CSR. This bit may be cleared by writing the Control Register (US_CR) with the bit RSTSTA at 1.

An end of receive break is detected by a high level for at least 2/16 of a bit period in asynchronous operating mode or one sample at high level in synchronous operating mode. The end of break detection also asserts the RXBRK bit.

33.7.3.16 *Hardware Handshaking*

The USART features a hardware handshaking out-of-band flow control. The RTS and CTS pins are used to connect with the remote device, as shown in Figure 33-27.

Figure 33-27. Connection with a Remote Device for Hardware Handshaking

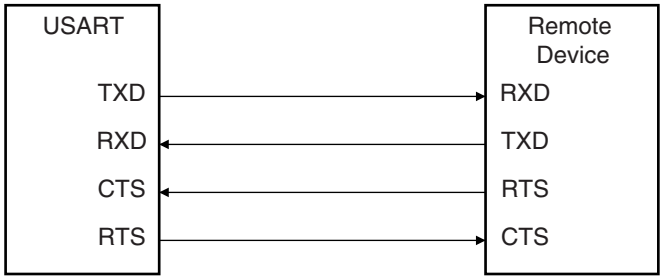

Setting the USART to operate with hardware handshaking is performed by writing the USART_MODE field in the Mode Register (US_MR) to the value 0x2.

The USART behavior when hardware handshaking is enabled is the same as the behavior in standard synchronous or asynchronous mode, except that the receiver drives the RTS pin as described below and the level on the CTS pin modifies the behavior of the transmitter as described below. Using this mode requires using the PDC channel for reception. The transmitter can handle hardware handshaking in any case.

Figure 33-28 shows how the receiver operates if hardware handshaking is enabled. The RTS pin is driven high if the receiver is disabled and if the status RXBUFF (Receive Buffer Full) coming from the PDC channel is high. Normally, the remote device does not start transmitting while its CTS pin (driven by RTS) is high. As soon as the Receiver is enabled, the RTS falls, indicating to the remote device that it can start transmitting. Defining a new buffer to the PDC clears the status bit RXBUFF and, as a result, asserts the pin RTS low.

Figure 33-28. Receiver Behavior when Operating with Hardware Handshaking

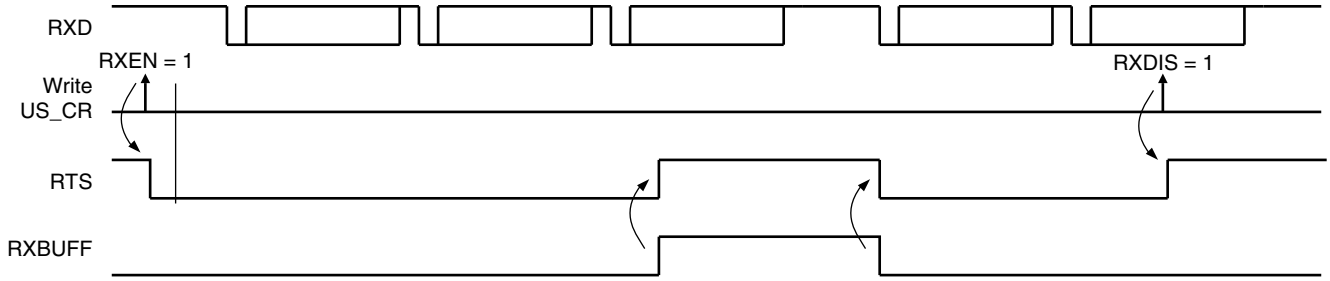

Figure 33-29 shows how the transmitter operates if hardware handshaking is enabled. The CTS pin disables the transmitter. If a character is being processing, the transmitter is disabled only after the completion of the current character and transmission of the next character happens as soon as the pin CTS falls.

Figure 33-29. Transmitter Behavior when Operating with Hardware Handshaking

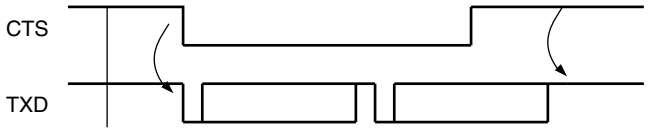

33.7.4 ISO7816 Mode

The USART features an ISO7816-compatible operating mode. This mode permits interfacing with smart cards and Security Access Modules (SAM) communicating through an ISO7816 link. Both T = 0 and T = 1 protocols defined by the ISO7816 specification are supported.

Setting the USART in ISO7816 mode is performed by writing the USART_MODE field in the Mode Register (US_MR) to the value 0x4 for protocol T = 0 and to the value 0x5 for protocol T = 1.

33.7.4.1 ISO7816 Mode Overview

The ISO7816 is a half duplex communication on only one bidirectional line. The baud rate is determined by a division of the clock provided to the remote device (see "Baud Rate Generator" on page 552).

The USART connects to a smart card as shown in Figure 33-30. The TXD line becomes bidirectional and the Baud Rate Generator feeds the ISO7816 clock on the SCK pin. As the TXD pin becomes bidirectional, its output remains driven by the output of the transmitter but only when the transmitter is active while its input is directed to the input of the receiver. The USART is considered as the master of the communication as it generates the clock.

Figure 33-30. Connection of a Smart Card to the USART

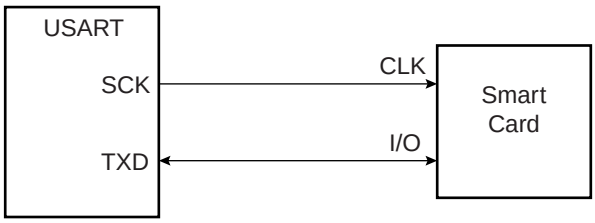

When operating in ISO7816, either in T = 0 or T = 1 modes, the character format is fixed. The configuration is 8 data bits, even parity and 1 or 2 stop bits, regardless of the values programmed in the CHRL, MODE9, PAR and CHMODE fields. MSBF can be used to transmit LSB or MSB first. Parity Bit (PAR) can be used to transmit in normal or inverse mode. Refer to "USART Mode Register" on page 605 and "PAR: Parity Type" on page 606.

The USART cannot operate concurrently in both receiver and transmitter modes as the communication is unidirectional at a time. It has to be configured according to the required mode by enabling or disabling either the receiver

or the transmitter as desired. Enabling both the receiver and the transmitter at the same time in ISO7816 mode may lead to unpredictable results.

The ISO7816 specification defines an inverse transmission format. Data bits of the character must be transmitted on the I/O line at their negative value. The USART does not support this format and the user has to perform an exclusive OR on the data before writing it in the Transmit Holding Register (US_THR) or after reading it in the Receive Holding Register (US_RHR).

33.7.4.2 Protocol T = 0

In T = 0 protocol, a character is made up of one start bit, eight data bits, one parity bit and one guard time, which lasts two bit times. The transmitter shifts out the bits and does not drive the I/O line during the guard time.

If no parity error is detected, the I/O line remains at 1 during the guard time and the transmitter can continue with the transmission of the next character, as shown in Figure 33-31.

If a parity error is detected by the receiver, it drives the I/O line at 0 during the guard time, as shown in Figure 33-32. This error bit is also named NACK, for Non Acknowledge. In this case, the character lasts 1 bit time more, as the guard time length is the same and is added to the error bit time which lasts 1 bit time.

When the USART is the receiver and it detects an error, it does not load the erroneous character in the Receive Holding Register (US_RHR). It appropriately sets the PARE bit in the Status Register (US_SR) so that the software can handle the error.

Figure 33-31. T = 0 Protocol without Parity Error

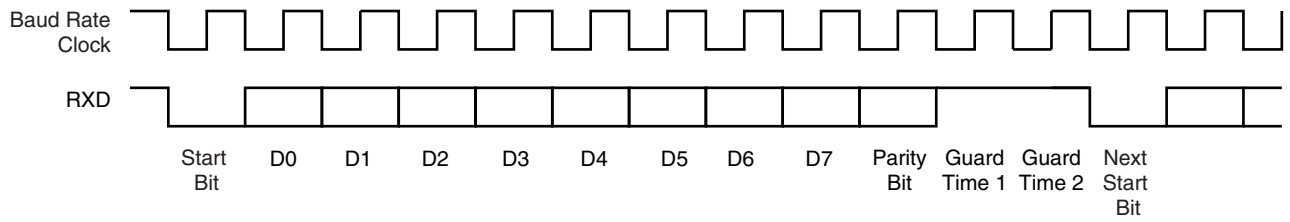

Figure 33-32. T = 0 Protocol with Parity Error

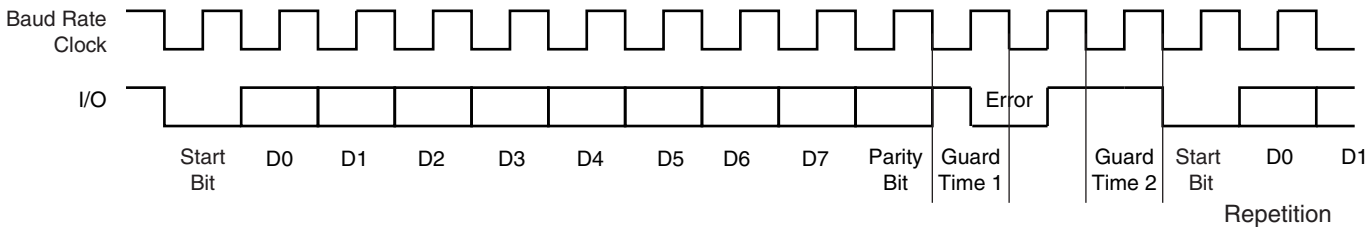

33.7.4.3 Receive Error Counter

The USART receiver also records the total number of errors. This can be read in the Number of Error (US_NER) register. The NB_ERRORS field can record up to 255 errors. Reading US_NER automatically clears the NB_ERRORS field.

33.7.4.4 Receive NACK Inhibit

The USART can also be configured to inhibit an error. This can be achieved by setting the INACK bit in the Mode Register (US_MR). If INACK is at 1, no error signal is driven on the I/O line even if a parity bit is detected, but the INACK bit is set in the Status Register (US_SR). The INACK bit can be cleared by writing the Control Register (US_CR) with the RSTNACK bit at 1.

Moreover, if INACK is set, the erroneous received character is stored in the Receive Holding Register, as if no error occurred. However, the RXRDY bit does not raise.

33.7.4.5 *Transmit Character Repetition*

When the USART is transmitting a character and gets a NACK, it can automatically repeat the character before moving on to the next one. Repetition is enabled by writing the MAX_ITERATION field in the Mode Register (US_MR) at a value higher than 0. Each character can be transmitted up to eight times; the first transmission plus seven repetitions.

If MAX_ITERATION does not equal zero, the USART repeats the character as many times as the value loaded in MAX_ITERATION.

When the USART repetition number reaches MAX_ITERATION, the ITERATION bit is set in the Channel Status Register (US_CSR). If the repetition of the character is acknowledged by the receiver, the repetitions are stopped and the iteration counter is cleared.

The ITERATION bit in US_CSR can be cleared by writing the Control Register with the RSIT bit at 1.

33.7.4.6 *Disable Successive Receive NACK*

The receiver can limit the number of successive NACKs sent back to the remote transmitter. This is programmed by setting the bit DSNACK in the Mode Register (US_MR). The maximum number of NACK transmitted is programmed in the MAX_ITERATION field. As soon as MAX_ITERATION is reached, the character is considered as correct, an acknowledge is sent on the line and the ITERATION bit in the Channel Status Register is set.

33.7.4.7 *Protocol T = 1*

When operating in ISO7816 protocol T = 1, the transmission is similar to an asynchronous format with only one stop bit. The parity is generated when transmitting and checked when receiving. Parity error detection sets the PARE bit in the Channel Status Register (US_CSR).

33.7.5 IrDA Mode

The USART features an IrDA mode supplying half-duplex point-to-point wireless communication. It embeds the modulator and demodulator which allows a glueless connection to the infrared transceivers, as shown in Figure 33-33. The modulator and demodulator are compliant with the IrDA specification version 1.1 and support data transfer speeds ranging from 2.4 Kb/s to 115.2 Kb/s.

The USART IrDA mode is enabled by setting the USART_MODE field in the Mode Register (US_MR) to the value 0x8. The IrDA Filter Register (US_IF) allows configuring the demodulator filter. The USART transmitter and receiver operate in a normal asynchronous mode and all parameters are accessible. Note that the modulator and the demodulator are activated.

Figure 33-33. Connection to IrDA Transceivers

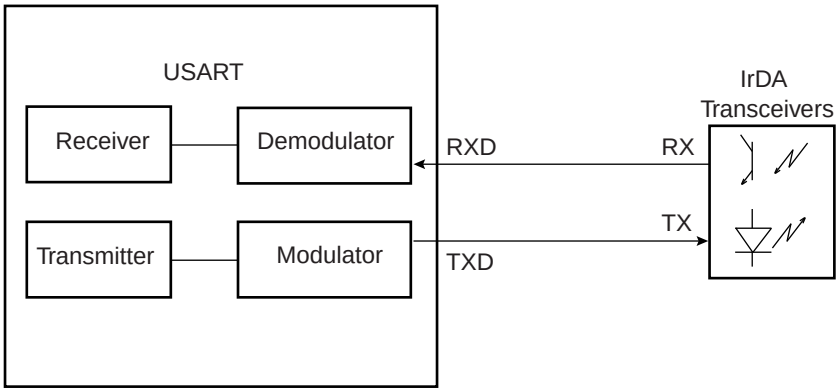

The receiver and the transmitter must be enabled or disabled according to the direction of the transmission to be managed.

To receive IrDA signals, the following needs to be done:

- Disable TX and Enable RX
- Configure the TXD pin as PIO and set it as an output at 0 (to avoid LED emission). Disable the internal pull-up (better for power consumption).
- Receive data

33.7.5.1 IrDA Modulation

For baud rates up to and including 115.2 Kbits/sec, the RZI modulation scheme is used. “0” is represented by a light pulse of 3/16th of a bit time. Some examples of signal pulse duration are shown in Table 33-12.

Table 33-12. IrDA Pulse Duration

Baud Rate	Pulse Duration (3/16)
2.4 Kb/s	78.13 µs
9.6 Kb/s	19.53 µs
19.2 Kb/s	9.77 µs
38.4 Kb/s	4.88 µs
57.6 Kb/s	3.26 µs
115.2 Kb/s	1.63 µs

Figure 33-34 shows an example of character transmission.

Figure 33-34. IrDA Modulation

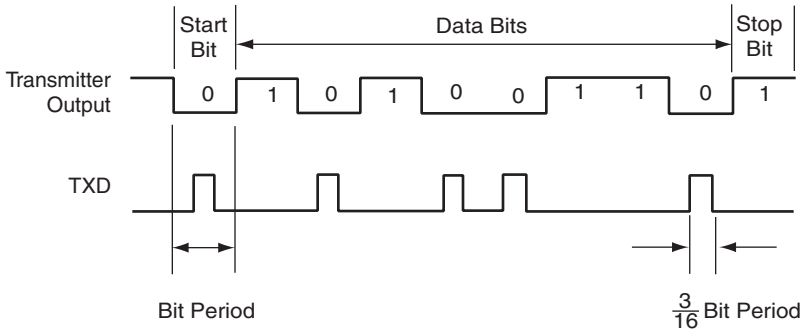

33.7.5.2 IrDA Baud Rate

Table 33-13 gives some examples of CD values, baud rate error and pulse duration. Note that the requirement on the maximum acceptable error of ±1.87% must be met.

Table 33-13. IrDA Baud Rate Error

Peripheral Clock	Baud Rate	CD	Baud Rate Error	Pulse Time
3 686 400	115 200	2	0.00%	1.63
20 000 000	115 200	11	1.38%	1.63
32 768 000	115 200	18	1.25%	1.63
40 000 000	115 200	22	1.38%	1.63

Table 33-13. IrDA Baud Rate Error (Continued)

Peripheral Clock	Baud Rate	CD	Baud Rate Error	Pulse Time
3 686 400	57 600	4	0.00%	3.26
20 000 000	57 600	22	1.38%	3.26
32 768 000	57 600	36	1.25%	3.26
40 000 000	57 600	43	0.93%	3.26
3 686 400	38 400	6	0.00%	4.88
20 000 000	38 400	33	1.38%	4.88
32 768 000	38 400	53	0.63%	4.88
40 000 000	38 400	65	0.16%	4.88
3 686 400	19 200	12	0.00%	9.77
20 000 000	19 200	65	0.16%	9.77
32 768 000	19 200	107	0.31%	9.77
40 000 000	19 200	130	0.16%	9.77
3 686 400	9 600	24	0.00%	19.53
20 000 000	9 600	130	0.16%	19.53
32 768 000	9 600	213	0.16%	19.53
40 000 000	9 600	260	0.16%	19.53
3 686 400	2 400	96	0.00%	78.13
20 000 000	2 400	521	0.03%	78.13
32 768 000	2 400	853	0.04%	78.13

33.7.5.3 IrDA Demodulator

The demodulator is based on the IrDA Receive filter comprised of an 8-bit down counter which is loaded with the value programmed in US_IF. When a falling edge is detected on the RXD pin, the Filter Counter starts counting down at the Master Clock (MCK) speed. If a rising edge is detected on the RXD pin, the counter stops and is reloaded with US_IF. If no rising edge is detected when the counter reaches 0, the input of the receiver is driven low during one bit time.

Figure 33-35 illustrates the operations of the IrDA demodulator.

Figure 33-35. IrDA Demodulator Operations

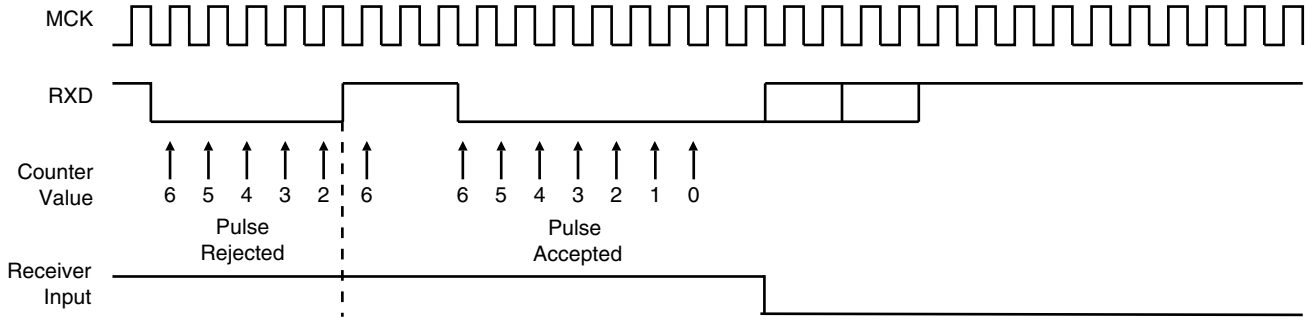

As the IrDA mode uses the same logic as the ISO7816, note that the FI_DI_RATIO field in US_FIDI must be set to a value higher than 0 in order to assure IrDA communications operate correctly.

33.7.6 RS485 Mode

The USART features the RS485 mode to enable line driver control. While operating in RS485 mode, the USART behaves as though in asynchronous or synchronous mode and configuration of all the parameters is possible. The difference is that the RTS pin is driven high when the transmitter is operating. The behavior of the RTS pin is controlled by the TXEMPTY bit. A typical connection of the USART to a RS485 bus is shown in Figure 33-36.

Figure 33-36. Typical Connection to a RS485 Bus

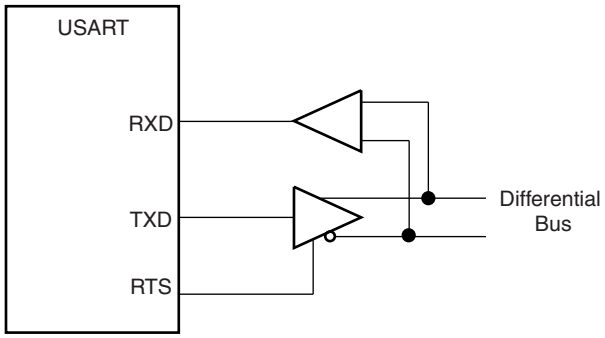

The USART is set in RS485 mode by programming the USART_MODE field in the Mode Register (US_MR) to the value 0x1.

The RTS pin is at a level inverse to the TXEMPTY bit. Significantly, the RTS pin remains high when a timeguard is programmed so that the line can remain driven after the last character completion. Figure 33-37 gives an example of the RTS waveform during a character transmission when the timeguard is enabled.

Figure 33-37. Example of RTS Drive with Timeguard

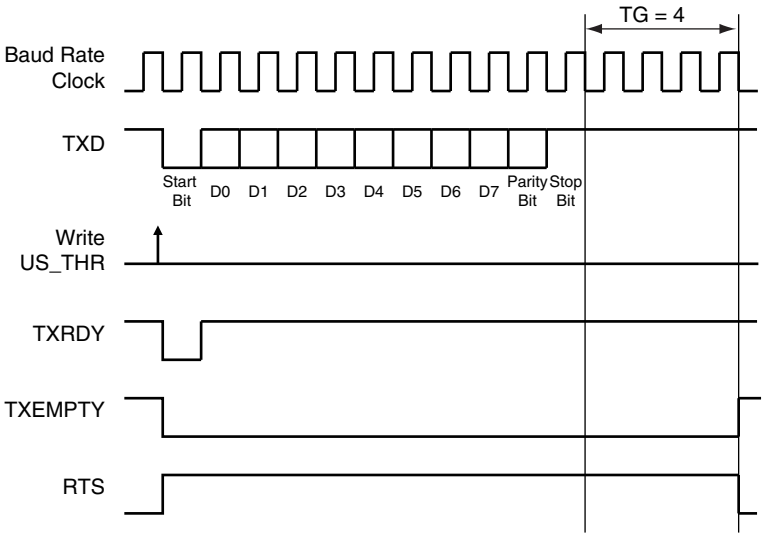

33.7.7 SPI Mode

The Serial Peripheral Interface (SPI) Mode is a synchronous serial data link that provides communication with external devices in Master or Slave Mode. It also enables communication between processors if an external processor is connected to the system.

The Serial Peripheral Interface is essentially a shift register that serially transmits data bits to other SPIs. During a data transfer, one SPI system acts as the “master” which controls the data flow, while the other devices act as “slaves" which have data shifted into and out by the master. Different CPUs can take turns being masters and one master may simultaneously shift data into multiple slaves. (Multiple Master Protocol is the opposite of Single Master Protocol, where one CPU is always the master while all of the others are always slaves.) However, only one slave may drive its output to write data back to the master at any given time.

A slave device is selected when its NSS signal is asserted by the master. The USART in SPI Master mode can address only one SPI Slave because it can generate only one NSS signal.

The SPI system consists of two data lines and two control lines:

- Master Out Slave In (MOSI): This data line supplies the output data from the master shifted into the input of the slave.
- Master In Slave Out (MISO): This data line supplies the output data from a slave to the input of the master.
- Serial Clock (SCK): This control line is driven by the master and regulates the flow of the data bits. The master may transmit data at a variety of baud rates. The SCK line cycles once for each bit that is transmitted.
- Slave Select (NSS): This control line allows the master to select or deselect the slave.

33.7.7.1 Modes of Operation

The USART can operate in SPI Master Mode or in SPI Slave Mode.

Operation in SPI Master Mode is programmed by writing at 0xE the USART_MODE field in the Mode Register. In this case the SPI lines must be connected as described below:

- The MOSI line is driven by the output pin TXD
- The MISO line drives the input pin RXD
- The SCK line is driven by the output pin SCK
- The NSS line is driven by the output pin RTS

Operation in SPI Slave Mode is programmed by writing at 0xF the USART_MODE field in the Mode Register. In this case the SPI lines must be connected as described below:

- The MOSI line drives the input pin RXD
- The MISO line is driven by the output pin TXD
- The SCK line drives the input pin SCK
- The NSS line drives the input pin CTS

In order to avoid unpredicted behavior, any change of the SPI Mode must be followed by a software reset of the transmitter and of the receiver (except the initial configuration after a hardware reset). (See Section 33.7.8.2).

33.7.7.2 Baud Rate

In SPI Mode, the baudrate generator operates in the same way as in USART synchronous mode: See “Baud Rate in Synchronous Mode or SPI Mode” on page 554. However, there are some restrictions:

In SPI Master Mode:

- The external clock SCK must not be selected (USCLKS ≠ 0x3), and the bit CLKO must be set to “1” in the Mode Register (US_MR), in order to generate correctly the serial clock on the SCK pin.

- To obtain correct behavior of the receiver and the transmitter, the value programmed in CD of must be superior or equal to 6.
- If the internal clock divided (MCK/DIV) is selected, the value programmed in CD must be even to ensure a 50:50 mark/space ratio on the SCK pin, this value can be odd if the internal clock is selected (MCK).

In SPI Slave Mode:

- The external clock (SCK) selection is forced regardless of the value of the USCLKS field in the Mode Register (US_MR). Likewise, the value written in US_BRGR has no effect, because the clock is provided directly by the signal on the USART SCK pin.
- To obtain correct behavior of the receiver and the transmitter, the external clock (SCK) frequency must be at least 4 times lower than the system clock.

33.7.7.3 Data Transfer

Up to 9 data bits are successively shifted out on the TXD pin at each rising or falling edge (depending of CPOL and CPHA) of the programmed serial clock. There is no Start bit, no Parity bit and no Stop bit.

The number of data bits is selected by the CHRL field and the MODE 9 bit in the Mode Register (US_MR). The 9 bits are selected by setting the MODE 9 bit regardless of the CHRL field. The MSB data bit is always sent first in SPI Mode (Master or Slave).

Four combinations of polarity and phase are available for data transfers. The clock polarity is programmed with the CPOL bit in the Mode Register. The clock phase is programmed with the CPHA bit. These two parameters determine the edges of the clock signal upon which data is driven and sampled. Each of the two parameters has two possible states, resulting in four possible combinations that are incompatible with one another. Thus, a master/slave pair must use the same parameter pair values to communicate. If multiple slaves are used and fixed in different configurations, the master must reconfigure itself each time it needs to communicate with a different slave.

Table 33-14. SPI Bus Protocol Mode

SPI Bus Protocol Mode	CPOL	CPHA
0	0	1
1	0	0
2	1	1
3	1	0

Figure 33-38. SPI Transfer Format (CPHA=1, 8 bits per transfer)

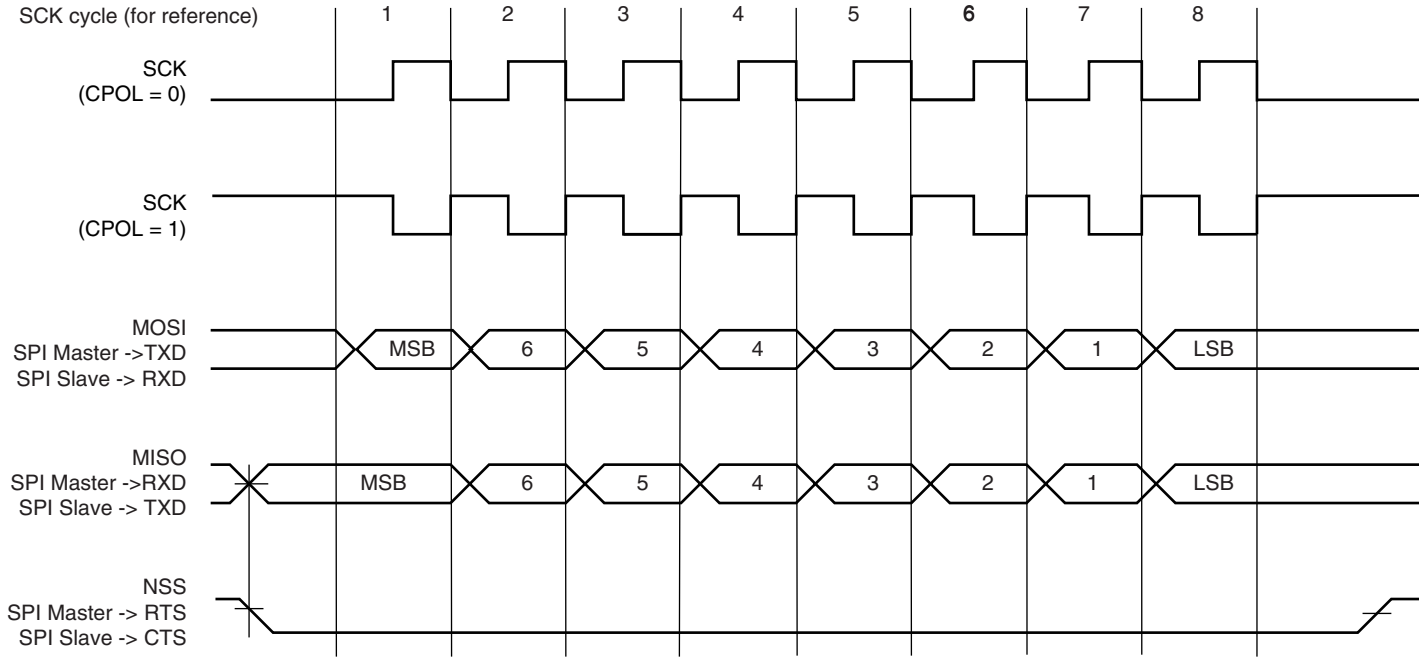

Figure 33-39. SPI Transfer Format (CPHA=0, 8 bits per transfer)

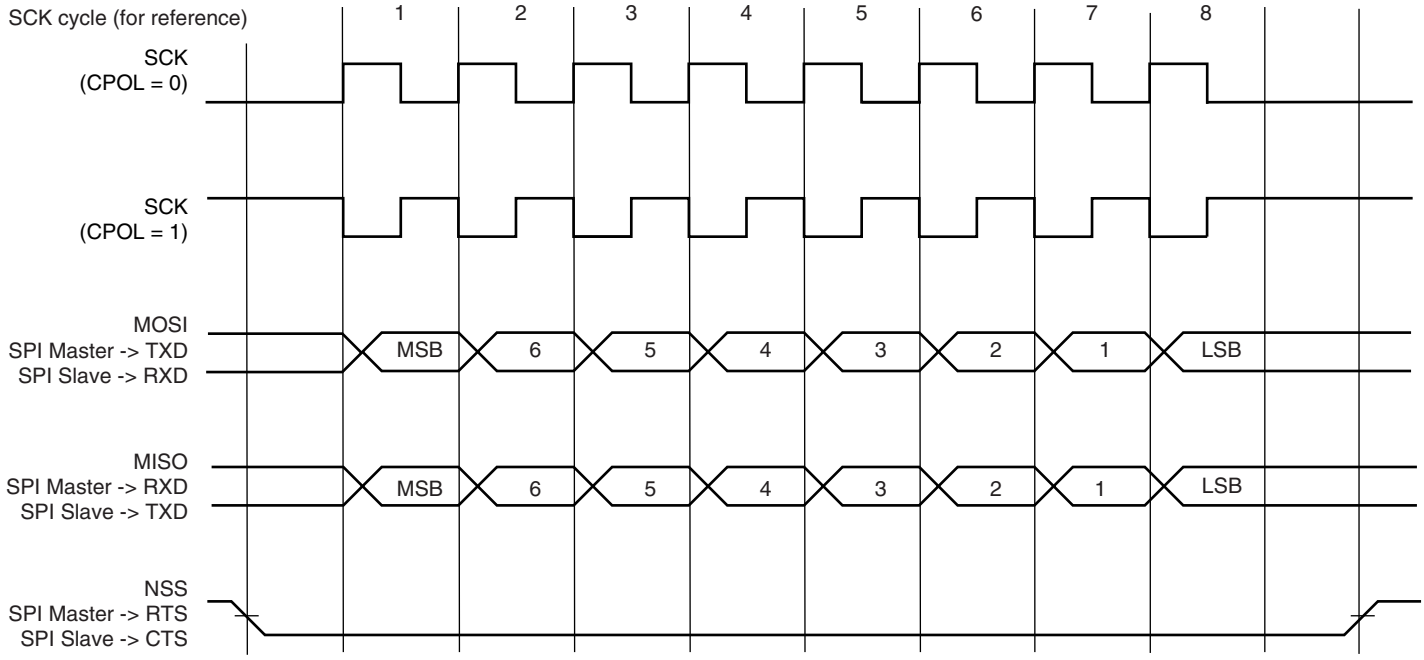

33.7.7.4 Receiver and Transmitter Control

See “Receiver and Transmitter Control” on page 556.

33.7.7.5 Character Transmission

The characters are sent by writing in the Transmit Holding Register (US_THR). The transmitter reports two status bits in the Channel Status Register (US_CSR): TXRDY (Transmitter Ready), which indicates that US_THR is empty and TXEMPTY, which indicates that all the characters written in US_THR have been processed. When the current character processing is completed, the last character written in US_THR is transferred into the Shift Register of the transmitter and US_THR becomes empty, thus TXRDY rises.

Both TXRDY and TXEMPTY bits are low when the transmitter is disabled. Writing a character in US_THR while TXRDY is low has no effect and the written character is lost.

If the USART is in SPI Slave Mode and if a character must be sent while the Transmit Holding Register (US_THR) is empty, the UNRE (Underrun Error) bit is set. The TXD transmission line stays at high level during all this time. The UNRE bit is cleared by writing the Control Register (US_CR) with the RSTSTA (Reset Status) bit at 1.

In SPI Master Mode, the slave select line (NSS) is asserted at low level 1 Tbit before the transmission of the MSB bit and released at high level 1 Tbit after the transmission of the LSB bit. So, the slave select line (NSS) is always released between each character transmission and a minimum delay of 3 Tbits always inserted. However, in order to address slave devices supporting the CSAAT mode (Chip Select Active After Transfer), the slave select line (NSS) can be forced at low level by writing the Control Register (US_CR) with the RTSEN bit at 1. The slave select line (NSS) can be released at high level only by writing the Control Register (US_CR) with the RTSDIS bit at 1 (for example, when all data have been transferred to the slave device).

In SPI Slave Mode, the transmitter does not require a falling edge of the slave select line (NSS) to initiate a character transmission but only a low level. However, this low level must be present on the slave select line (NSS) at least 1 Tbit before the first serial clock cycle corresponding to the MSB bit.

33.7.7.6 Character Reception

When a character reception is completed, it is transferred to the Receive Holding Register (US_RHR) and the RXRDY bit in the Status Register (US_CSR) rises. If a character is completed while RXRDY is set, the OVRE (Overrun Error) bit is set. The last character is transferred into US_RHR and overwrites the previous one. The OVRE bit is cleared by writing the Control Register (US_CR) with the RSTSTA (Reset Status) bit at 1.

To ensure correct behavior of the receiver in SPI Slave Mode, the master device sending the frame must ensure a minimum delay of 1 Tbit between each character transmission. The receiver does not require a falling edge of the slave select line (NSS) to initiate a character reception but only a low level. However, this low level must be present on the slave select line (NSS) at least 1 Tbit before the first serial clock cycle corresponding to the MSB bit.

33.7.7.7 Receiver Timeout

Because the receiver baudrate clock is active only during data transfers in SPI Mode, a receiver timeout is impossible in this mode, whatever the Time-out value is (field TO) in the Time-out Register (US_RTOR).

33.7.8 LIN Mode

The LIN Mode provides Master node and Slave node connectivity on a LIN bus.

The LIN (Local Interconnect Network) is a serial communication protocol which efficiently supports the control of mechatronic nodes in distributed automotive applications.

The main properties of the LIN bus are:

- Single Master/Multiple Slaves concept
- Low cost silicon implementation based on common UART/SCI interface hardware, an equivalent in software, or as a pure state machine.
- Self synchronization without quartz or ceramic resonator in the slave nodes
- Deterministic signal transmission
- Low cost single-wire implementation
- Speed up to 20 kbit/s

LIN provides cost efficient bus communication where the bandwidth and versatility of CAN are not required.

The LIN Mode enables processing LIN frames with a minimum of action from the microprocessor.

33.7.8.1 Modes of operation

The USART can act either as a LIN Master node or as a LIN Slave node.

The node configuration is chosen by setting the USART_MODE field in the USART3 Mode register (US_MR):

- LIN Master Node (USART_MODE=0xA)
- LIN Slave Node (USART_MODE=0xB)

In order to avoid unpredicted behavior, any change of the LIN node configuration must be followed by a software reset of the transmitter and of the receiver (except the initial node configuration after a hardware reset). (See Section 33.7.8.2)

33.7.8.2 Receiver and Transmitter Control

See “Receiver and Transmitter Control” on page 556.

33.7.8.3 Character Transmission

See “Transmitter Operations” on page 556.

33.7.8.4 Character Reception

See “Receiver Operations” on page 564.

33.7.8.5 Header Transmission (Master Node Configuration)

All the LIN Frames start with a header which is sent by the master node and consists of a Synch Break Field, Synch Field and Identifier Field.

So in Master node configuration, the frame handling starts with the sending of the header.

The header is transmitted as soon as the identifier is written in the LIN Identifier register (US_LINIR). At this moment the flag TXRDY falls.

The Break Field, the Synch Field and the Identifier Field are sent automatically one after the other.

The Break Field consists of 13 dominant bits and 1 recessive bit, the Synch Field is the character 0x55 and the Identifier corresponds to the character written in the LIN Identifier Register (US_LINIR). The Identifier parity bits can be automatically computed and sent (see Section 33.7.8.8).

The flag TXRDY rises when the identifier character is transferred into the Shift Register of the transmitter.As soon as the Synch Break Field is transmitted, the flag LINBK in the Channel Status register (US_CSR) is set to “1”. Likewise, as soon as the Identifier Field is sent, the flag LINID in the Channel Status register (US_CSR) is set to “1”. These flags are reset by writing the bit RSTSTA at “1” in the Control register (US_CR).

Figure 33-40. Header Transmission

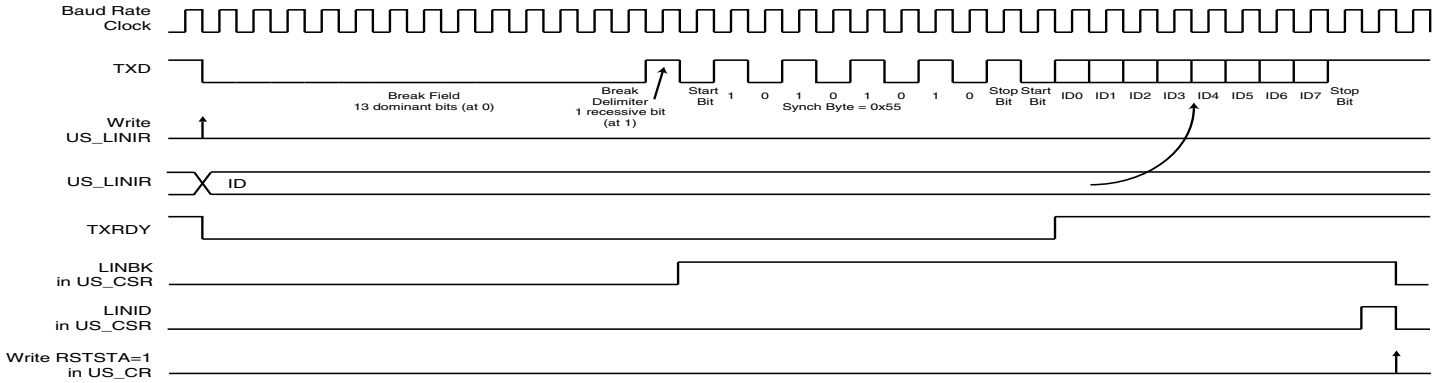

33.7.8.6 Header Reception (Slave Node Configuration)

All the LIN Frames start with a header which is sent by the master node and consists of a Synch Break Field, Synch Field and Identifier Field.

In Slave node configuration, the frame handling starts with the reception of the header.

The USART uses a break detection threshold of 11 nominal bit times at the actual baud rate. At any time, if 11 consecutive recessive bits are detected on the bus, the USART detects a Break Field. As long as a Break Field has not been detected, the USART stays idle and the received data are not taken in account.

When a Break Field has been detected, the flag LINBK in the Channel Status register (US_CSR) is set to “1” and the USART expects the Synch Field character to be 0x55. This field is used to update the actual baud rate in order to stay synchronized (see Section 33.7.8.7). If the received Synch character is not 0x55, an Inconsistent Synch Field error is generated (see Section 33.7.8.13).

After receiving the Synch Field, the USART expects to receive the Identifier Field.

When the Identifier Field has been received, the flag LINID in the Channel Status register (US_CSR) is set to “1”. At this moment the field IDCHR in the LIN Identifier register (US_LINIR) is updated with the received character. The Identifier parity bits can be automatically computed and checked (see Section 33.7.8.8).The flags LINID and LINBK are reset by writing the bit RSTSTA at “1” in the Control register (US_CR).

Figure 33-41. Header Reception

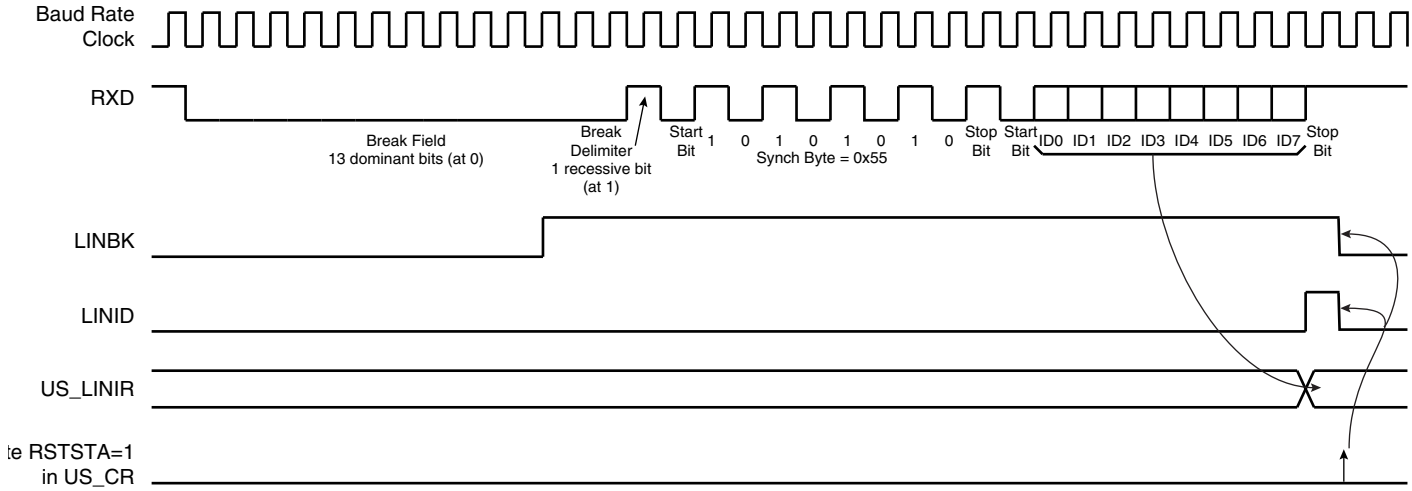

33.7.8.7 Slave Node Synchronization

The synchronization is done only in Slave node configuration. The procedure is based on time measurement between falling edges of the Synch Field. The falling edges are available in distances of 2, 4, 6 and 8 bit times.

Figure 33-42. Synch Field

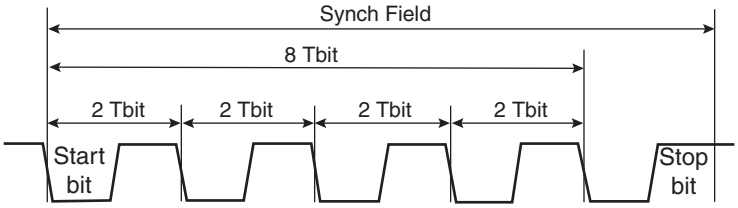

The time measurement is made by a 19-bit counter clocked by the sampling clock (see Section 33.7.1).

When the start bit of the Synch Field is detected the counter is reset. Then during the next 8 Tbits of the Synch Field, the counter is incremented. At the end of these 8 Tbits, the counter is stopped. At this moment, the 16 most significant bits of the counter (value divided by 8) gives the new clock divider (CD) and the 3 least significant bits of this value (the remainder) gives the new fractional part (FP).

When the Synch Field has been received, the clock divider (CD) and the fractional part (FP) are updated in the Baud Rate Generator register (US_BRGR).

Figure 33-43. Slave Node Synchronization

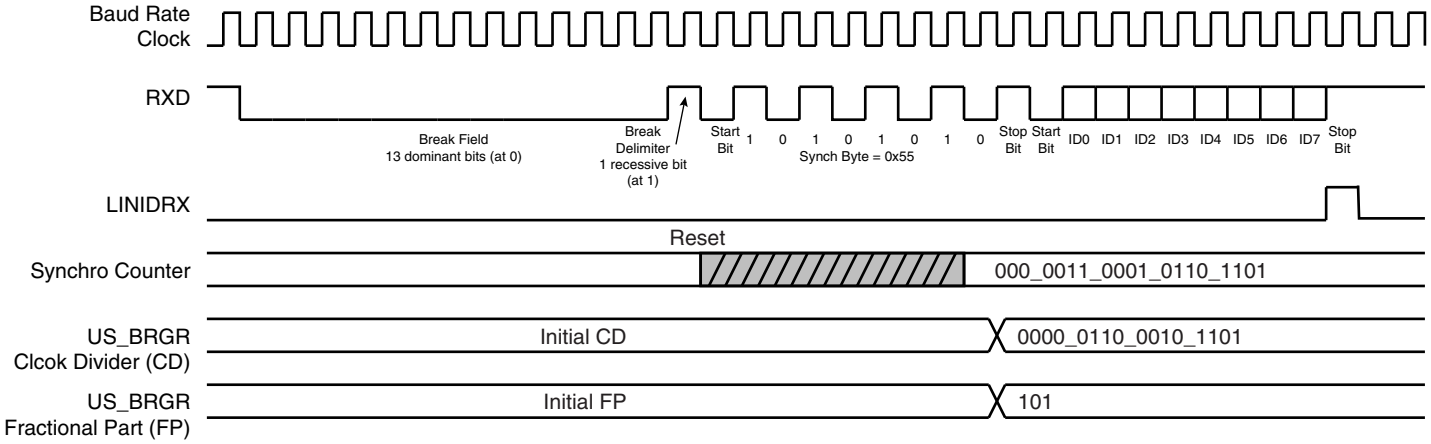

The accuracy of the synchronization depends on several parameters:

- The nominal clock frequency (F_{Nom}) (the theoretical slave node clock frequency)
- The Baudrate
- The oversampling (Over=0 => 16X or Over=0 => 8X)

The following formula is used to compute the deviation of the slave bit rate relative to the master bit rate after synchronization (F_{SLAVE} is the real slave node clock frequency).

$$\text{Baudrate_deviation} = \left(100 \times \frac{[\alpha \times 8 \times (2 - \text{Over}) + \beta] \times \text{Baudrate}}{8 \times F_{SLAVE}}\right)\%$$

$$\text{Baudrate_deviation} = \left(100 \times \frac{[\alpha \times 8 \times (2 - \text{Over}) + \beta] \times \text{Baudrate}}{8 \times \left(\frac{F_{TOL_UNSYNCH}}{100}\right) x F_{Nom}}\right)\%$$

$$-0.5 \le \alpha \le +0.5 \quad -1 < \beta < +1$$

$F_{TOL_UNSYNCH}$ is the deviation of the real slave node clock from the nominal clock frequency. The LIN Standard imposes that it must not exceed ±15%. The LIN Standard imposes also that for communication between two nodes, their bit rate must not differ by more than ±2%. This means that the Baudrate_deviation must not exceed ±1%.

It follows from that, a minimum value for the nominal clock frequency:

$$F_{NOM}(\text{min}) = \left(100 \times \frac{[0.5 \times 8 \times (2 - \text{Over}) + 1] \times \text{Baudrate}}{8 \times \left(\frac{-15}{100} + 1\right) \times 1\%}\right)\text{Hz}$$

Examples:

- Baudrate = 20 kbit/s, Over=0 (Oversampling 16X) => F_{Nom}(min) = 2.64 MHz
- Baudrate = 20 kbit/s, Over=1 (Oversampling 8X) => F_{Nom}(min) = 1.47 MHz
- Baudrate = 1 kbit/s, Over=0 (Oversampling 16X) => F_{Nom}(min) = 132 kHz
- Baudrate = 1 kbit/s, Over=1 (Oversampling 8X) => F_{Nom}(min) = 74 kHz

If the fractional baud rate is not used, the accuracy of the synchronization becomes much lower. When the counter is stopped, the 16 most significant bits of the counter (value divided by 8) gives the new clock divider (CD). This value is rounded by adding the first insignificant bit. The equation of the Baudrate deviation is the same as given above, but the constants are as follows:

$-4 \le \alpha \le +4 \quad -1 < \beta < +1$ It follows from that, a minimum value for the nominal clock frequency:

$$F_{NOM}(\text{min}) = \left(100 \times \frac{[4 \times 8 \times (2 - \text{Over}) + 1] \times \text{Baudrate}}{8 \times \left(\frac{-15}{100} + 1\right) \times 1\%}\right)\text{Hz}$$

Examples:

- Baudrate = 20 kbit/s, Over=0 (Oversampling 16X) => F_{Nom}(min) = 19.12 MHz
- Baudrate = 20 kbit/s, Over=1 (Oversampling 8X) => F_{Nom}(min) = 9.71 MHz
- Baudrate = 1 kbit/s, Over=0 (Oversampling 16X) => F_{Nom}(min) = 956 kHz
- Baudrate = 1 kbit/s, Over=1 (Oversampling 8X) => F_{Nom}(min) = 485 kHz

33.7.8.8 Identifier Parity

A protected identifier consists of two sub-fields; the identifier and the identifier parity. Bits 0 to 5 are assigned to the identifier and bits 6 and 7 are assigned to the parity.

The USART interface can generate/check these parity bits, but this feature can also be disabled. The user can choose between two modes by the PARDIS bit of the LIN Mode register (US_LINMR):

- PARDIS = 0:

During header transmission, the parity bits are computed and sent with the 6 least significant bits of the IDCHR field of the LIN Identifier register (US_LINIR). The bits 6 and 7 of this register are discarded.

During header reception, the parity bits of the identifier are checked. If the parity bits are wrong, an Identifier Parity error occurs (see Section 33.7.3.9). Only the 6 least significant bits of the IDCHR field are updated with the received Identifier. The bits 6 and 7 are stuck at 0.

- PARDIS = 1:

During header transmission, all the bits of the IDCHR field of the LIN Identifier register (US_LINIR) are sent on the bus.

During header reception, all the bits of the IDCHR field are updated with the received Identifier.

33.7.8.9 Node Action

In function of the identifier, the node is concerned, or not, by the LIN response. Consequently, after sending or receiving the identifier, the USART must be configured. There are three possible configurations:

- PUBLISH: the node sends the response.
- SUBSCRIBE: the node receives the response.
- IGNORE: the node is not concerned by the response, it does not send and does not receive the response.

This configuration is made by the field, Node Action (NACT), in the US_LINMR register (see Section 33.8.16).

Example: a LIN cluster that contains a Master and two Slaves:

- Data transfer from the Master to the Slave 1 and to the Slave 2:

  NACT(Master)=PUBLISH

  NACT(Slave1)=SUBSCRIBE

  NACT(Slave2)=SUBSCRIBE
- Data transfer from the Master to the Slave 1 only:

  NACT(Master)=PUBLISH

  NACT(Slave1)=SUBSCRIBE

  NACT(Slave2)=IGNORE
- Data transfer from the Slave 1 to the Master:

  NACT(Master)=SUBSCRIBE

  NACT(Slave1)=PUBLISH

  NACT(Slave2)=IGNORE
- Data transfer from the Slave1 to the Slave2:

  NACT(Master)=IGNORE

  NACT(Slave1)=PUBLISH

  NACT(Slave2)=SUBSCRIBE
- Data transfer from the Slave2 to the Master and to the Slave1:

  NACT(Master)=SUBSCRIBE

  NACT(Slave1)=SUBSCRIBE

  NACT(Slave2)=PUBLISH

33.7.8.10 Response Data Length

The LIN response data length is the number of data fields (bytes) of the response excluding the checksum.

The response data length can either be configured by the user or be defined automatically by bits 4 and 5 of the Identifier (compatibility to LIN Specification 1.1). The user can choose between these two modes by the DLM bit of the LIN Mode register (US_LINMR):

- DLM = 0: the response data length is configured by the user via the DLC field of the LIN Mode register (US_LINMR). The response data length is equal to (DLC + 1) bytes. DLC can be programmed from 0 to 255, so the response can contain from 1 data byte up to 256 data bytes.
- DLM = 1: the response data length is defined by the Identifier (IDCHR in US_LINIR) according to the table below. The DLC field of the LIN Mode register (US_LINMR) is discarded. The response can contain 2 or 4 or 8 data bytes.

Table 33-15. Response Data Length if DLM = 1

IDCHR[5]	IDCHR[4]	Response Data Length [bytes]
0	0	2
0	1	2
1	0	4
1	1	8

Figure 33-44. Response Data Length

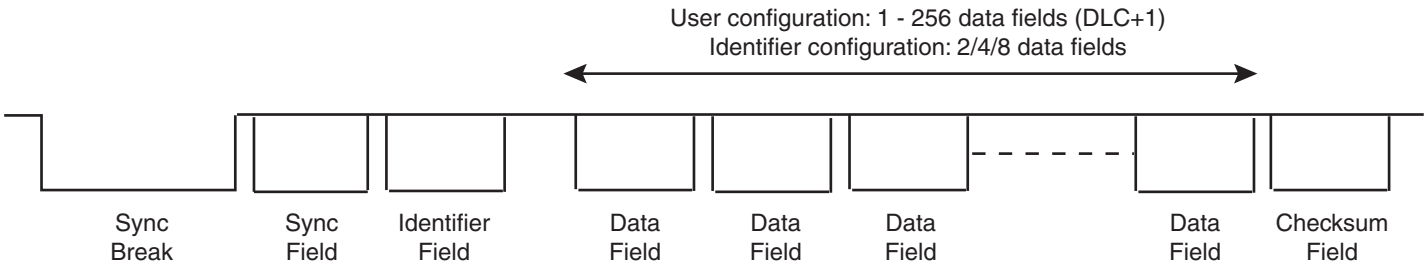

33.7.8.11 Checksum

The last field of a frame is the checksum. The checksum contains the inverted 8- bit sum with carry, over all data bytes or all data bytes and the protected identifier. Checksum calculation over the data bytes only is called classic checksum and it is used for communication with LIN 1.3 slaves. Checksum calculation over the data bytes and the protected identifier byte is called enhanced checksum and it is used for communication with LIN 2.0 slaves.

The USART can be configured to:

- Send/Check an Enhanced checksum automatically (CHKDIS = 0 & CHKTYP = 0)
- Send/Check a Classic checksum automatically (CHKDIS = 0 & CHKTYP = 1)
- Not send/check a checksum (CHKDIS = 1)

This configuration is made by the Checksum Type (CHKTYP) and Checksum Disable (CHKDIS) fields of the LIN Mode register (US_LINMR).

If the checksum feature is disabled, the user can send it manually all the same, by considering the checksum as a normal data byte and by adding 1 to the response data length (see Section 33.7.8.10).

33.7.8.12 Frame Slot Mode

This mode is useful only for Master nodes. It respects the following rule: each frame slot shall be longer than or equal to TFrame_Maximum.

If the Frame Slot Mode is enabled (FSDIS = 0) and a frame transfer has been completed, the TXRDY flag is set again only after TFrame_Maximum delay, from the start of frame. So the Master node cannot send a new header if the frame slot duration of the previous frame is inferior to TFrame_Maximum.

If the Frame Slot Mode is disabled (FDIS = 1) and a frame transfer has been completed, the TXRDY flag is set again immediately.

The TFrame_Maximum is calculated as below:

If the Checksum is sent (CHKDIS = 0):

- THeader_Nominal = 34 x TBit
- TResponse_Nominal = 10 x (NData + 1) x TBit
- TFrame_Maximum = 1.4 x (THeader_Nominal + TResponse_Nominal + 1)(Note:)
- TFrame_Maximum = 1.4 x (34 + 10 x (DLC + 1 + 1) + 1) x TBIT
- TFrame_Maximum = (77 + 14 x DLC) x TBIT

If the Checksum is not sent (CHKDIS = 1):

- THeader_Nominal = 34 x TBit
- TResponse_Nominal = 10 x NData x TBit
- TFrame_Maximum = 1.4 x (THeader_Nominal + TResponse_Nominal + 1(Note:))
- TFrame_Maximum = 1.4 x (34 + 10 x (DLC + 1) + 1) x TBIT
- TFrame_Maximum = (63 + 14 x DLC) x TBIT

Note: The term “+1” leads to an integer result for TFrame_Max (LIN Specification 1.3)

Figure 33-45. Frame Slot Mode

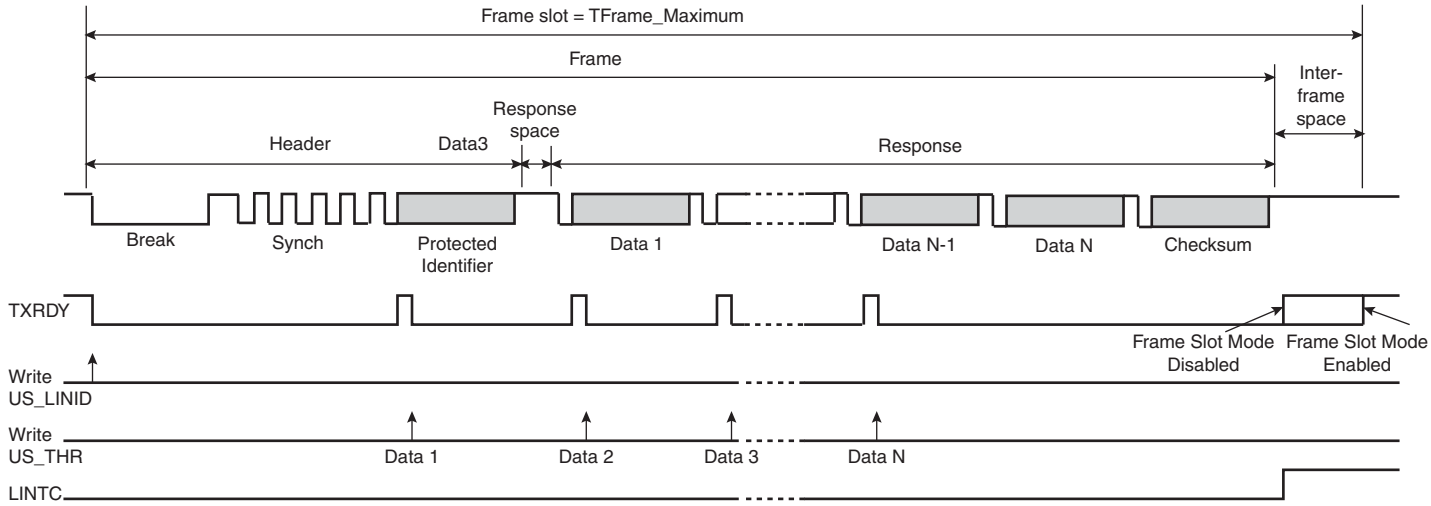

33.7.8.13 LIN Errors

33.7.8.14 Bit Error

This error is generated when the USART is transmitting and if the transmitted value on the Tx line is different from the value sampled on the Rx line.

If a bit error is detected, the transmission is aborted at the next byte border.

33.7.8.15 Inconsistent Synch Field Error

This error is generated in Slave node configuration if the Synch Field character received is other than 0x55.

33.7.8.16 Parity Error

This error is generated if the parity of the identifier is wrong. This error can be generated only if the parity feature is enabled (PARDIS = 0).

33.7.8.17 Checksum Error

This error is set if the received checksum is wrong. This error can be generated only if the checksum feature is enabled (CHKDIS = 0).

33.7.8.18 Slave Not Responding Error

This error is set when the USART expects a response from another node (NACT = SUBSCRIBE) but no valid message appears on the bus within the time frame given by the maximum length of the message frame, TFrame_Maximum (see Section 33.7.8.12). This error is disabled if the USART does not expect any message (NACT = PUBLISH or NACT = IGNORE).

33.7.8.19 LIN Frame Handling

33.7.8.20 Master Node Configuration

- Write TXEN and RXEN in US_CR to enable both the transmitter and the receiver.
- Write USART_MODE in US_MR to select the LIN mode and the Master Node configuration.
- Write CD and FP in US_BRGR to configure the baud rate.
- Write NACT, PARDIS, CHKDIS, CHKTYPE, DLCM, FDIS and DLC in US_LINMR to configure the frame transfer.
- Check that TXRDY in US_CSR is set to “1”

Write IDCHR in US_LINIR to send the header

What comes next depends on the NACT configuration:

- Case 1: NACT = PUBLISH, the USART sends the response
  - Wait until TXRDY in US_CSR rises
  - Write TCHR in US_THR to send a byte
  - If all the data have not been written, redo the two previous steps
  - Wait until LINTC in US_CSR rises
  - Check the LIN errors
- Case 2: NACT = SUBSCRIBE, the USART receives the response
  - Wait until RXRDY in US_CSR rises
  - Read RCHR in US_RHR
  - If all the data have not been read, redo the two previous steps
  - Wait until LINTC in US_CSR rises
  - Check the LIN errors
- Case 3: NACT = IGNORE, the USART is not concerned by the response
  - Wait until LINTC in US_CSR rises
  - Check the LIN errors

Figure 33-46. Master Node Configuration, NACT = PUBLISH

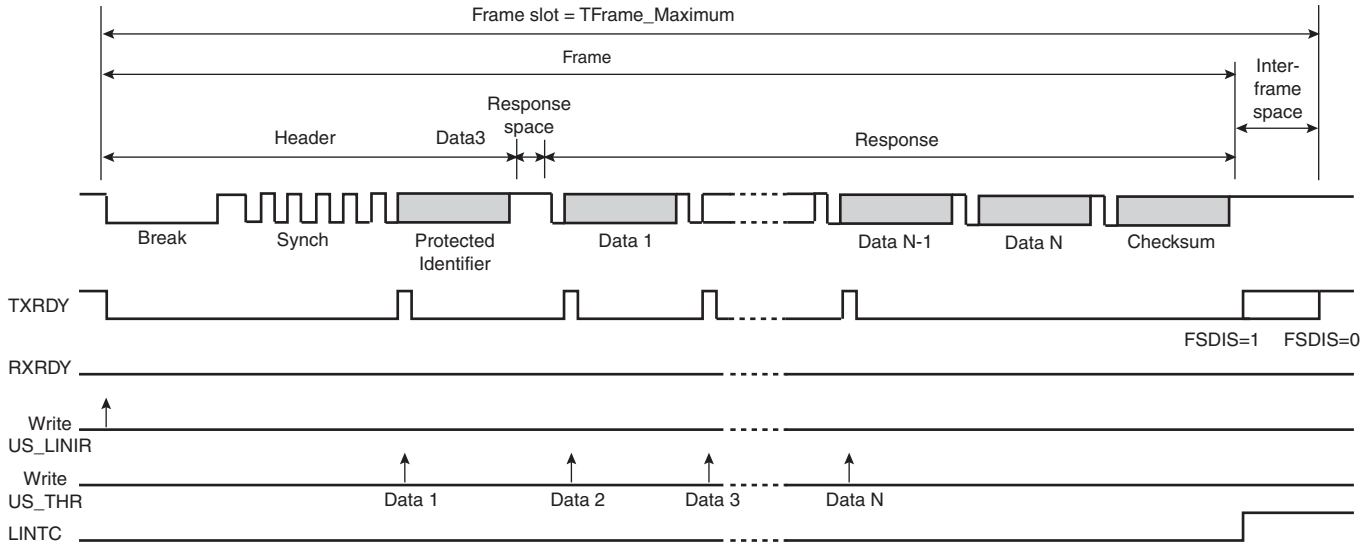

Figure 33-47. Master Node Configuration, NACT=SUBSCRIBE

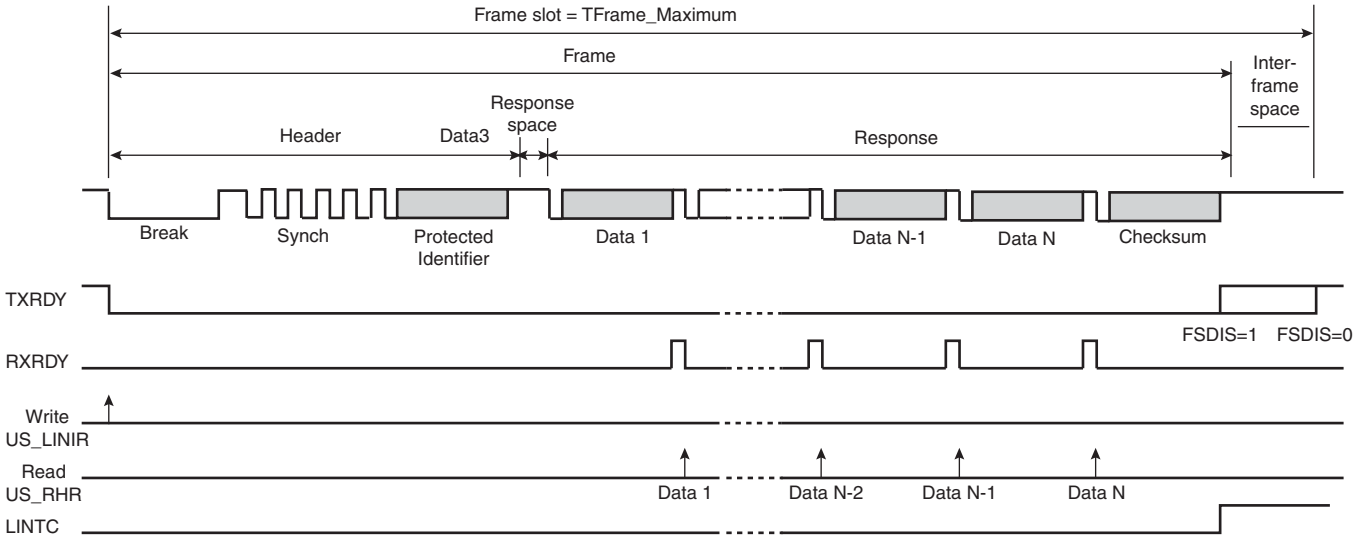

Figure 33-48. Master Node Configuration, NACT=IGNORE

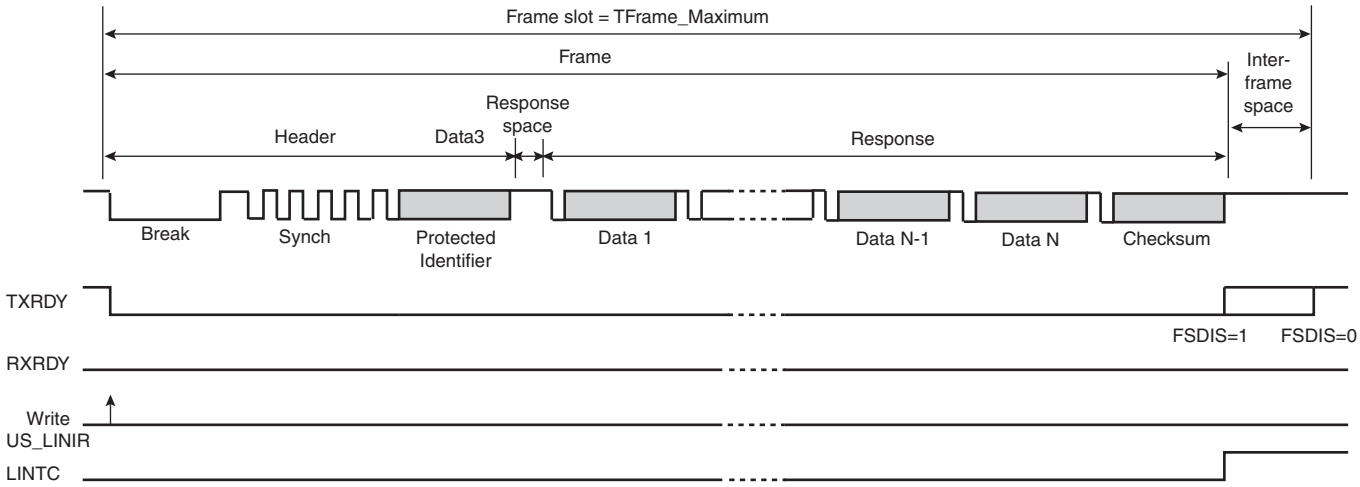

33.7.8.21 Slave Node Configuratio

- Write TXEN and RXEN in US_CR to enable both the transmitter and the receiver.
- Write USART_MODE in US_MR to select the LIN mode and the Slave Node configuration.
- Write CD and FP in US_BRGR to configure the baud rate.
- Wait until LINID in US_CSR rises
- Check LINISFE and LINPE errors
- Read IDCHR in US_RHR

Write NACT, PARDIS, CHKDIS, CHKTYPE, DLCM and DLC in US_LINMR to configure the frame transfer.

IMPORTANT: if the NACT configuration for this frame is PUBLISH, the US_LINMR register, must be write with NACT = PUBLISH even if this field is already correctly configured, in order to set the TXREADY flag and the corresponding PDC write transfer request.

What comes next depends on the NACT configuration:

- Case 1: NACT = PUBLISH, the LIN controller sends the response

– Wait until TXRDY in US_CSR rises
– Write TCHR in US_THR to send a byte
– If all the data have not been written, redo the two previous steps
– Wait until LINTC in US_CSR rises
– Check the LIN errors

- Case 2: NACT = SUBSCRIBE, the USART receives the response
  – Wait until RXRDY in US_CSR rises
  – Read RCHR in US_RHR
  – If all the data have not been read, redo the two previous steps
  – Wait until LINTC in US_CSR rises
  – Check the LIN errors
- Case 3: NACT = IGNORE, the USART is not concerned by the response
  – Wait until LINTC in US_CSR rises
  – Check the LIN errors

Figure 33-49. Slave Node Configuration, NACT = PUBLISH

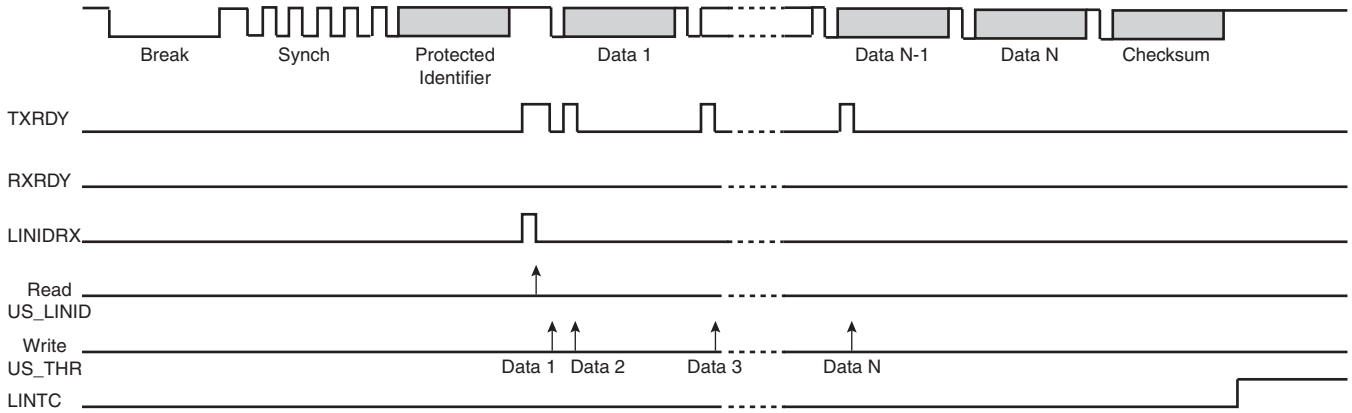

Figure 33-50. Slave Node Configuration, NACT = SUBSCRIBE

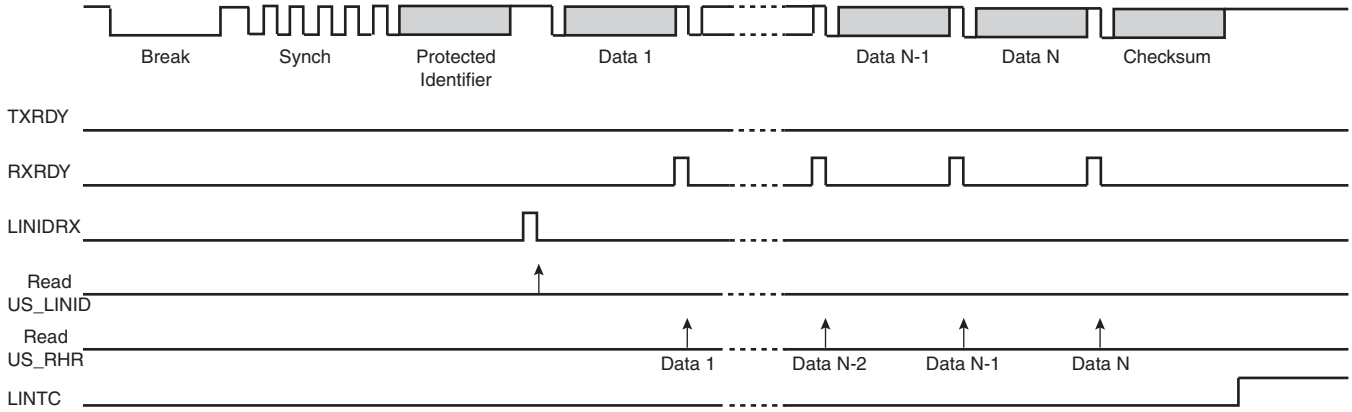

Figure 33-51. Slave Node Configuration, NACT = IGNORE

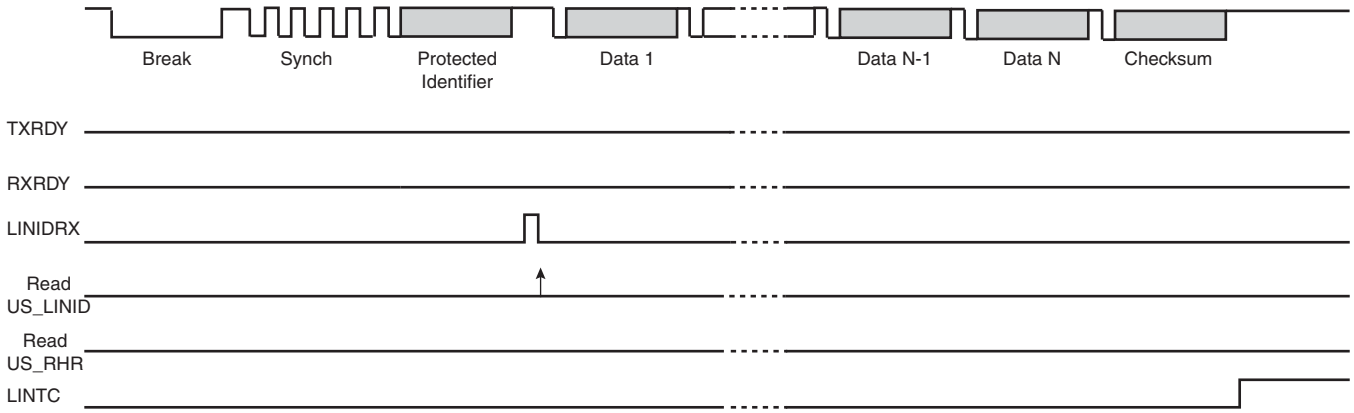

33.7.8.22 *LIN Frame Handling With The Peripheral DMA Controller*

The USART can be used in association with the Peripheral DMA Controller (PDC) in order to transfer data directly into/from the on- and off-chip memories without any processor intervention.

The PDC uses the trigger flags, TXRDY and RXRDY, to write or read into the USART. The PDC always writes in the Transmit Holding register (US_THR) and it always reads in the Receive Holding register (US_RHR). The size of the data written or read by the PDC in the USART is always a byte.

33.7.8.23 *Master Node Configuration*

The user can choose between two PDC modes by the PDCM bit in the LIN Mode register (US_LINMR):

- PDCM = 1: the LIN configuration is stored in the WRITE buffer and it is written by the PDC in the Transmit Holding register US_THR (instead of the LIN Mode register US_LINMR). Because the PDC transfer size is limited to a byte, the transfer is split into two accesses. During the first access the bits, NACT, PARDIS, CHKDIS, CHKTYP, DLM and FDIS are written. During the second access the 8-bit DLC field is written.
- PDCM = 0: the LIN configuration is not stored in the WRITE buffer and it must be written by the user in the LIN Mode register (US_LINMR).

The WRITE buffer also contains the Identifier and the DATA, if the USART sends the response (NACT = PUBLISH).

The READ buffer contains the DATA if the USART receives the response (NACT = SUBSCRIBE).

Figure 33-52. Master Node with PDC (PDCM=1)

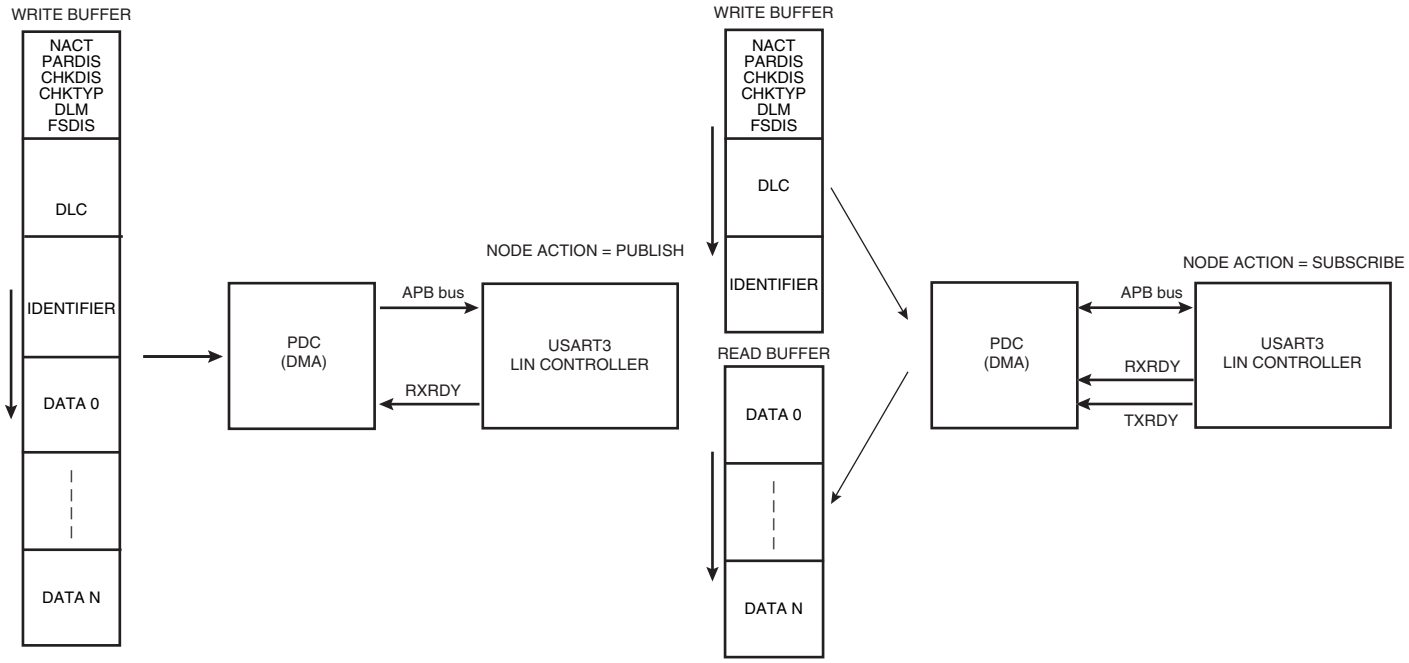

Figure 33-53. Master Node with PDC (PDCM=0)

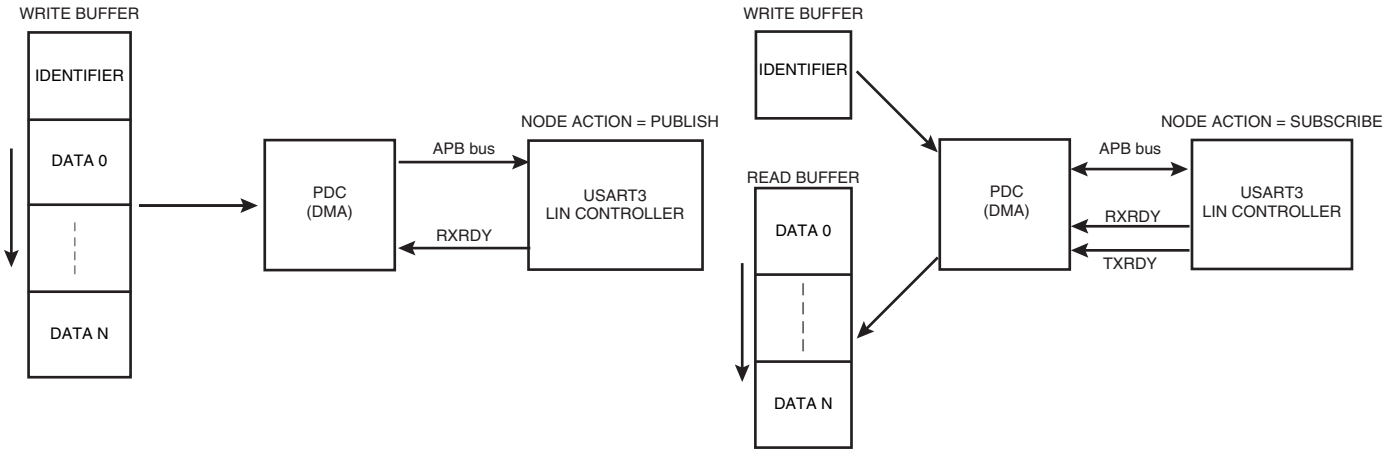

33.7.8.24 Slave Node Configuration

In this configuration, the PDC transfers only the DATA. The Identifier must be read by the user in the LIN Identifier register (US_LINIR). The LIN mode must be written by the user in the LIN Mode register (US_LINMR).

The WRITE buffer contains the DATA if the USART sends the response (NACT=PUBLISH).

The READ buffer contains the DATA if the USART receives the response (NACT=SUBSCRIBE).

Figure 33-54. Slave Node with PDC

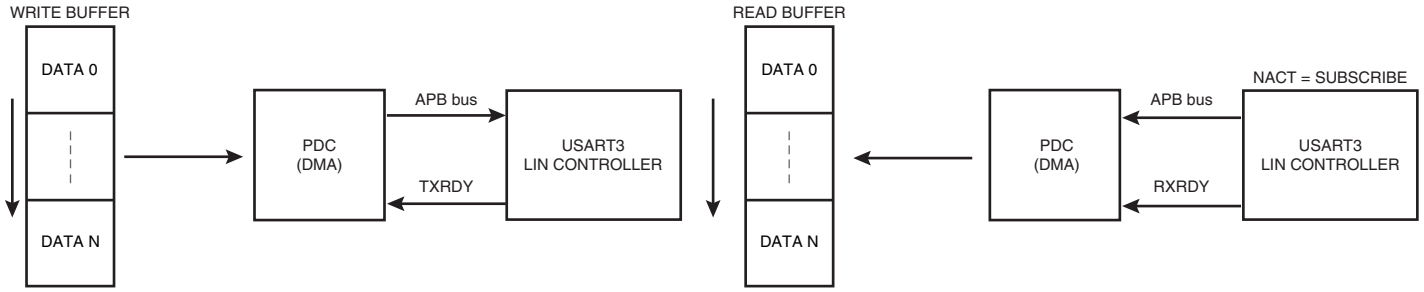

33.7.8.25 Wake-up Request

Any node in a sleeping LIN cluster may request a wake-up.

In the LIN 2.0 specification, the wakeup request is issued by forcing the bus to the dominant state from 250 µs to 5 ms. For this, it is necessary to send the character 0xF0 in order to impose 5 successive dominant bits. Whatever the baud rate is, this character respects the specified timings.

- Baud rate min = 1 kbit/s -> Tbit = 1ms -> 5 Tbits = 5 ms
- Baud rate max = 20 kbit/s -> Tbi t= 50 µs -> 5 Tbits = 250 µs

In the LIN 1.3 specification, the wakeup request should be generated with the character 0x80 in order to impose 8 successive dominant bits.

The user can choose by the WKUPTYP bit in the LIN Mode register (US_LINMR) either to send a LIN 2.0 wakeup request (WKUPTYP=0) or to send a LIN 1.3 wakeup request (WKUPTYP=1).

A wake-up request is transmitted by writing the Control Register (US_CR) with the LINWKUP bit at 1. Once the transfer is completed, the LINTC flag is asserted in the Status Register (US_SR). It is cleared by writing the Control Register (US_CR) with the RSTSTA bit at 1.

33.7.8.26 Bus Idle Time-out

If the LIN bus is inactive for a certain duration, the slave nodes shall automatically enter in sleep mode. In the LIN 2.0 specification, this time-out is fixed at 4 seconds. In the LIN 1.3 specification, it is fixed at 25000 Tbits.

In Slave Node configuration, the Receiver Time-out detects an idle condition on the RXD line. When a time-out is detected, the bit TIMEOUT in the Channel Status Register (US_CSR) rises and can generate an interrupt, thus indicating to the driver to go into sleep mode.

The time-out delay period (during which the receiver waits for a new character) is programmed in the TO field of the Receiver Time-out Register (US_RTOR). If the TO field is programmed at 0, the Receiver Time-out is disabled and no time-out is detected. The TIMEOUT bit in US_CSR remains at 0. Otherwise, the receiver loads a 17-bit counter with the value programmed in TO. This counter is decremented at each bit period and reloaded each time a new character is received. If the counter reaches 0, the TIMEOUT bit in the Status Register rises.

If STTTO is performed, the counter clock is stopped until a first character is received.

If RETTO is performed, the counter starts counting down immediately from the value TO.

Table 33-16. Receiver Time-out programming

LIN Specification	Baud Rate	Time-out period	TO
2.0	1 000 bit/s	4s	4 000
	2 400 bit/s		9 600
	9 600 bit/s		38 400
	19 200 bit/s		76 800
	20 000 bit/s		80 000
1.3	-	25 000 Tbits	25 000

33.7.9 Test Modes

The USART can be programmed to operate in three different test modes. The internal loopback capability allows on-board diagnostics. In the loopback mode the USART interface pins are disconnected or not and reconfigured for loopback internally or externally.

33.7.9.1 Normal Mode

Normal mode connects the RXD pin on the receiver input and the transmitter output on the TXD pin.

Figure 33-55. Normal Mode Configuration

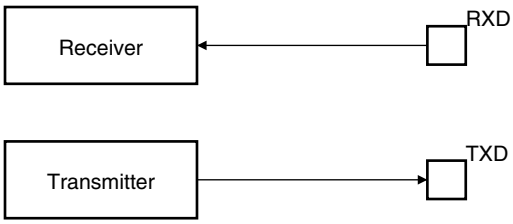

33.7.9.2 Automatic Echo Mode

Automatic echo mode allows bit-by-bit retransmission. When a bit is received on the RXD pin, it is sent to the TXD pin, as shown in Figure 33-56. Programming the transmitter has no effect on the TXD pin. The RXD pin is still connected to the receiver input, thus the receiver remains active.

Figure 33-56. Automatic Echo Mode Configuration

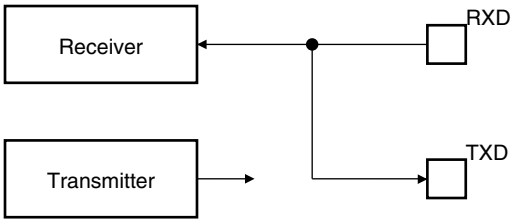

33.7.9.3 Local Loopback Mode

Local loopback mode connects the output of the transmitter directly to the input of the receiver, as shown in Figure 33-57. The TXD and RXD pins are not used. The RXD pin has no effect on the receiver and the TXD pin is continuously driven high, as in idle state.

Figure 33-57. Local Loopback Mode Configuration

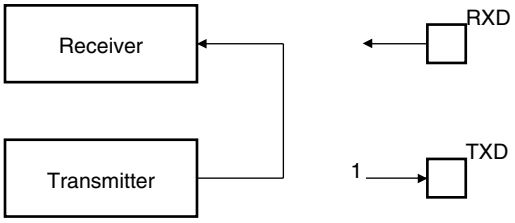

33.7.9.4 Remote Loopback Mode

Remote loopback mode directly connects the RXD pin to the TXD pin, as shown in Figure 33-58. The transmitter and the receiver are disabled and have no effect. This mode allows bit-by-bit retransmission.

Figure 33-58. Remote Loopback Mode Configuration

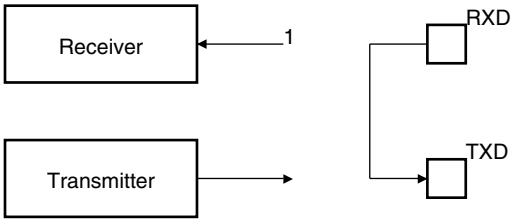

33.8 Universal Synchronous Asynchronous Receiver Transmitter (USART) User Interface

Table 33-17. Register Mapping

Offset	Register	Name	Access	Reset
0x0000	Control Register	US_CR	Write-only	–
0x0004	Mode Register	US_MR	Read-write	–
0x0008	Interrupt Enable Register	US_IER	Write-only	–
0x000C	Interrupt Disable Register	US_IDR	Write-only	–
0x0010	Interrupt Mask Register	US_IMR	Read-only	0x0
0x0014	Channel Status Register	US_CSR	Read-only	–
0x0018	Receiver Holding Register	US_RHR	Read-only	0x0
0x001C	Transmitter Holding Register	US_THR	Write-only	–
0x0020	Baud Rate Generator Register	US_BRGR	Read-write	0x0
0x0024	Receiver Time-out Register	US_RTOR	Read-write	0x0
0x0028	Transmitter Timeguard Register	US_TTGR	Read-write	0x0
0x2C - 0x3C	Reserved	–	–	–
0x0040	FI DI Ratio Register	US_FIDI	Read-write	0x174
0x0044	Number of Errors Register	US_NER	Read-only	–
0x0048	Reserved	–	–	–
0x004C	IrDA Filter Register	US_IF	Read-write	0x0
0x0050	Manchester Encoder Decoder Register	US_MAN	Read-write	0x30011004
0x0054	LIN Mode Register	US_LINMR	Read-write	0x0
0x0058	LIN Identifier Register	US_LINIR	Read-write[1]	0x0
0x5C - 0xFC	Reserved	–	–	–
0x100 - 0x128	Reserved for PDC Registers	–	–	–

Notes: 1. Write is possible only in LIN Master node configuration.

33.8.1 USART Control Register

Name: US_CR

Addresses: 0xFFF8C000 (0), 0xFFF90000 (1), 0xFFF94000 (2), 0xFFF98000 (3)

Access: Write-only

31	30	29	28	27	26	25	24
–	–	–	–	–	–	–	–

23	22	21	20	19	18	17	16
–	–	LINWKUP	LINABT	RTSDIS/RCS	RTSEN/FCS	–	–

15	14	13	12	11	10	9	8
RETTO	RSTNACK	RSTIT	SENDA	STTTO	STPBRK	STTBRK	RSTSTA

7	6	5	4	3	2	1	0
TXDIS	TXEN	RXDIS	RXEN	RSTTX	RSTRX	–	–

- **RSTRX: Reset Receiver**

0: No effect.

1: Resets the receiver.

- **RSTTX: Reset Transmitter**

0: No effect.

1: Resets the transmitter.

- **RXEN: Receiver Enable**

0: No effect.

1: Enables the receiver, if RXDIS is 0.

- **RXDIS: Receiver Disable**

0: No effect.

1: Disables the receiver.

- **TXEN: Transmitter Enable**

0: No effect.

1: Enables the transmitter if TXDIS is 0.

- **TXDIS: Transmitter Disable**

0: No effect.

1: Disables the transmitter.

- **RSTSTA: Reset Status Bits**

0: No effect.

1: Resets the status bits PARE, FRAME, OVRE, MANERR, LINBE, LINSFE, LINIPE, LINCE, LINSNRE and RXBRK in US_CSR.

- **STTBRK: Start Break**

0: No effect.

1: Starts transmission of a break after the characters present in US_THR and the Transmit Shift Register have been transmitted. No effect if a break is already being transmitted.

- **STPBRK: Stop Break**

0: No effect.

1: Stops transmission of the break after a minimum of one character length and transmits a high level during 12-bit periods. No effect if no break is being transmitted.

- **STTTO: Start Time-out**

0: No effect.

1: Starts waiting for a character before clocking the time-out counter. Resets the status bit TIMEOUT in US_CSR.

- **SENDA: Send Address**

0: No effect.

1: In Multidrop Mode only, the next character written to the US_THR is sent with the address bit set.

- **RSTIT: Reset Iterations**

0: No effect.

1: Resets ITERATION in US_CSR. No effect if the ISO7816 is not enabled.

- **RSTNACK: Reset Non Acknowledge**

0: No effect

1: Resets NACK in US_CSR.

- **RETTO: Rearm Time-out**

0: No effect

1: Restart Time-out

- **RTSEN/FCS: Request to Send Enable/Force SPI Chip Select**
  - If USART does not operate in SPI Master Mode (USART_MODE ≠ 0xE):

0: No effect.

1: Drives the pin RTS to 0.

  - If USART operates in SPI Master Mode (USART_MODE = 0xE):

FCS = 0: No effect.

FCS = 1: Forces the Slave Select Line NSS (RTS pin) to 0, even if USART is no transmitting, in order to address SPI slave devices supporting the CSAAT Mode (Chip Select Active After Transfer).

- **RTSDIS/RCS: Request to Send Disable/Release SPI Chip Select**
  - If USART does not operate in SPI Master Mode (USART_MODE ≠ 0xE):

0: No effect.

1: Drives the pin RTS to 1.

  - If USART operates in SPI Master Mode (USART_MODE = 0xE):

RCS = 0: No effect.

RCS = 1: Releases the Slave Select Line NSS (RTS pin).

- **LINABT: Abort LIN Transmission**

0: No effect.

1: Abort the current LIN transmission.

- **LINWKUP: Send LIN Wakeup Signal**

0: No effect:

1: Sends a wakeup signal on the LIN bus.

33.8.2 USART Mode Register

Name: US_MR

Addresses: 0xFFF8C004 (0), 0xFFF90004 (1), 0xFFF94004 (2), 0xFFF98004 (3)

Access: Read-write

31	30	29	28	27	26	25	24
ONEBIT	MODSYNC–	MAN	FILTER	–	MAX_ITERATION		

23	22	21	20	19	18	17	16
	VAR_SYNC	DSNACK	INACK	OVER	CLKO	MODE9	MSBF/CPOL

15	14	13	12	11	10	9	8
CHMODE		NBSTOP		PAR			SYNC/CPHA

7	6	5	4	3	2	1	0
CHRL		USCLKS		USART_MODE			

- **USART_MODE**

USART_MODE				Mode of the USART
0	0	0	0	Normal
0	0	0	1	RS485
0	0	1	0	Hardware Handshaking
0	1	0	0	IS07816 Protocol: T = 0
0	1	1	0	IS07816 Protocol: T = 1
1	0	0	0	IrDA
1	0	1	0	LIN Master
1	0	1	1	LIN Slave
1	1	1	0	SPI Master
1	1	1	1	SPI Slave
Others				Reserved

- **USCLKS: Clock Selection**

USCLKS		Selected Clock
0	0	MCK
0	1	MCK/DIV (DIV = 8)
1	0	Reserved
1	1	SCK

- **CHRL: Character Length.**

CHRL		Character Length
0	0	5 bits
0	1	6 bits
1	0	7 bits
1	1	8 bits

- **SYNC/CPHA: Synchronous Mode Select or SPI Clock Phase**
  - If USART does not operate in SPI Mode (USART_MODE is ≠ 0xE and 0xF):

SYNC = 0: USART operates in Asynchronous Mode.

SYNC = 1: USART operates in Synchronous Mode.

  - If USART operates in SPI Mode (USART_MODE = 0xE or 0xF):

CPHA = 0: Data is changed on the leading edge of SPCK and captured on the following edge of SPCK.

CPHA = 1: Data is captured on the leading edge of SPCK and changed on the following edge of SPCK.

CPHA determines which edge of SPCK causes data to change and which edge causes data to be captured. CPHA is used with CPOL to produce the required clock/data relationship between master and slave devices.

- **PAR: Parity Type**

PAR			Parity Type
0	0	0	Even parity
0	0	1	Odd parity
0	1	0	Parity forced to 0 (Space)
0	1	1	Parity forced to 1 (Mark)
1	0	x	No parity
1	1	x	Multidrop mode

- **NBSTOP: Number of Stop Bits**

NBSTOP		Asynchronous (SYNC = 0)	Synchronous (SYNC = 1)
0	0	1 stop bit	1 stop bit
0	1	1.5 stop bits	Reserved
1	0	2 stop bits	2 stop bits
1	1	Reserved	Reserved

- **CHMODE: Channel Mode**

CHMODE		Mode Description
0	0	Normal Mode

0	1	Automatic Echo. Receiver input is connected to the TXD pin.
1	0	Local Loopback. Transmitter output is connected to the Receiver Input.
1	1	Remote Loopback. RXD pin is internally connected to the TXD pin.

- **MSBF/CPOL: Bit Order or SPI Clock Polarity**
  - If USART does not operate in SPI Mode (USART_MODE ≠ 0xE and 0xF):

MSBF = 0: Least Significant Bit is sent/received first.

MSBF = 1: Most Significant Bit is sent/received first.

  - If USART operates in SPI Mode (Slave or Master, USART_MODE = 0xE or 0xF):

CPOL = 0: The inactive state value of SPCK is logic level zero.

CPOL = 1: The inactive state value of SPCK is logic level one.

CPOL is used to determine the inactive state value of the serial clock (SPCK). It is used with CPHA to produce the required clock/data relationship between master and slave devices.

- **MODE9: 9-bit Character Length**

0: CHRL defines character length.

1: 9-bit character length.

- **CLKO: Clock Output Select**

0: The USART does not drive the SCK pin.

1: The USART drives the SCK pin if USCLKS does not select the external clock SCK.

- **OVER: Oversampling Mode**

0: 16x Oversampling.

1: 8x Oversampling.

- **INACK: Inhibit Non Acknowledge**

0: The NACK is generated.

1: The NACK is not generated.

- **DSNACK: Disable Successive NACK**

0: NACK is sent on the ISO line as soon as a parity error occurs in the received character (unless INACK is set).

1: Successive parity errors are counted up to the value specified in the MAX_ITERATION field. These parity errors generate a NACK on the ISO line. As soon as this value is reached, no additional NACK is sent on the ISO line. The flag ITERATION is asserted.

- **VAR_SYNC: Variable Synchronization of Command/Data Sync Start Frame Delimiter**

0: User defined configuration of command or data sync field depending on SYNC value.

1: The sync field is updated when a character is written into US_THR register.

- **MAX_ITERATION**

Defines the maximum number of iterations in mode ISO7816, protocol T= 0.

- **FILTER: Infrared Receive Line Filter**

0: The USART does not filter the receive line.

1: The USART filters the receive line using a three-sample filter (1/16-bit clock) (2 over 3 majority).

- **MAN: Manchester Encoder/Decoder Enable**

0: Manchester Encoder/Decoder are disabled.

1: Manchester Encoder/Decoder are enabled.

- **MODSYNC: Manchester Synchronization Mode**

0:The Manchester Start bit is a 0 to 1 transition

1: The Manchester Start bit is a 1 to 0 transition.

- **ONEBIT: Start Frame Delimiter Selector**

0: Start Frame delimiter is COMMAND or DATA SYNC.

1: Start Frame delimiter is One Bit.

33.8.3 USART Interrupt Enable Register

Name: US_IER

Addresses: 0xFFF8C008 (0), 0xFFF90008 (1), 0xFFF94008 (2), 0xFFF98008 (3)

Access: Write-only

31	30	29	28	27	26	25	24
–	–	LINSNRE	LINCE	LINIPE	LINISFE	LINBE	MANE

23	22	21	20	19	18	17	16
–	–	–	–	CTSIC	–	–	–

15	14	13	12	11	10	9	8
LINTC	LINID	NACK/LINBK	RXBUFF	TXBUFE	ITER/UNRE	TXEMPTY	TIMEOUT

7	6	5	4	3	2	1	0
PARE	FRAME	OVRE	ENDTX	ENDRX	RXBRK	TXRDY	RXRDY

- **RXRDY: RXRDY Interrupt Enable**
- **TXRDY: TXRDY Interrupt Enable**
- **RXBRK: Receiver Break Interrupt Enable**
- **ENDRX: End of Receive Transfer Interrupt Enable**
- **ENDTX: End of Transmit Interrupt Enable**
- **OVRE: Overrun Error Interrupt Enable**
- **FRAME: Framing Error Interrupt Enable**
- **PARE: Parity Error Interrupt Enable**
- **TIMEOUT: Time-out Interrupt Enable**
- **TXEMPTY: TXEMPTY Interrupt Enable**
- **ITER/UNRE: Iteration or SPI Underrun Error Interrupt Enable**
- **TXBUFE: Buffer Empty Interrupt Enable**
- **RXBUFF: Buffer Full Interrupt Enable**
- **NACK/LINBK: Non Acknowledge or LIN Break Sent or LIN Break Received Interrupt Enable**
- **LINID: LIN Identifier Sent or LIN Identifier Received Interrupt Enable**
- **LINTC: LIN Transfer Completed Interrupt Enable**
- **CTSIC: Clear to Send Input Change Interrupt Enable**
- **MANE: Manchester Error Interrupt Enable**

- **LINBE: LIN Bus Error Interrupt Enable**
- **LINISFE: LIN Inconsistent Synch Field Error Interrupt Enable**
- **LINIPE: LIN Identifier Parity Interrupt Enable**
- **LINCE: LIN Checksum Error Interrupt Enable**
- **LINSNRE: LIN Slave Not Responding Error Interrupt Enable**

33.8.4 USART Interrupt Disable Register

Name: US_IDR

Addresses: 0xFFF8C00C (0), 0xFFF9000C (1), 0xFFF9400C (2), 0xFFF9800C (3)

Access: Write-only

31	30	29	28	27	26	25	24
–	–	LINSNRE	LINCE	LINIPE	LINISFE	LINBE	MANE

23	22	21	20	19	18	17	16
–	–	–	–	CTSIC	–	–	–

15	14	13	12	11	10	9	8
LINTC	LINID	NACK/LINBK	RXBUFF	TXBUFE	ITER/UNRE	TXEMPTY	TIMEOUT

7	6	5	4	3	2	1	0
PARE	FRAME	OVRE	ENDTX	ENDRX	RXBRK	TXRDY	RXRDY

- **RXRDY: RXRDY Interrupt Disable**
- **TXRDY: TXRDY Interrupt Disable**
- **RXBRK: Receiver Break Interrupt Disable**
- **ENDRX: End of Receive Transfer Interrupt Disable**
- **ENDTX: End of Transmit Interrupt Disable**
- **OVRE: Overrun Error Interrupt Disable**
- **FRAME: Framing Error Interrupt Disable**
- **PARE: Parity Error Interrupt Disable**
- **TIMEOUT: Time-out Interrupt Disable**
- **TXEMPTY: TXEMPTY Interrupt Disable**
- **ITER/UNRE: Iteration or SPI Underrun Error Interrupt Enable**
- **TXBUFE: Buffer Empty Interrupt Disable**
- **RXBUFF: Buffer Full Interrupt Disable**
- **NACK/LINBK: Non Acknowledge or LIN Break Sent or LIN Break Received Interrupt Disable**
- **LINID: LIN Identifier Sent or LIN Identifier Received Interrupt Disable**
- **LINTC: LIN Transfer Completed Interrupt Disable**
- **CTSIC: Clear to Send Input Change Interrupt Disable**
- **MANE: Manchester Error Interrupt Disable**

- **LINBE: LIN Bus Error Interrupt Disable**
- **LINISFE: LIN Inconsistent Synch Field Error Interrupt Disable**
- **LINIPE: LIN Identifier Parity Interrupt Disable**
- **LINCE: LIN Checksum Error Interrupt Disable**
- **LINSNRE: LIN Slave Not Responding Error Interrupt Disable**

33.8.5 USART Interrupt Mask Register

Name: US_IMR

Addresses: 0xFFF8C010 (0), 0xFFF90010 (1), 0xFFF94010 (2), 0xFFF98010 (3)

Access: Read-only

31	30	29	28	27	26	25	24
–	–	LINSNRE	LINCE	LINIPE	LINISFE	LINBE	MANE

23	22	21	20	19	18	17	16
–	–	–	–	CTSIC	–	–	–

15	14	13	12	11	10	9	8
LINTC	LINID	NACK/LINBK	RXBUFF	TXBUFE	ITER/UNRE	TXEMPTY	TIMEOUT

7	6	5	4	3	2	1	0
PARE	FRAME	OVRE	ENDTX	ENDRX	RXBRK	TXRDY	RXRDY

- **RXRDY: RXRDY Interrupt Mask**
- **TXRDY: TXRDY Interrupt Mask**
- **RXBRK: Receiver Break Interrupt Mask**
- **ENDRX: End of Receive Transfer Interrupt Mask**
- **ENDTX: End of Transmit Interrupt Mask**
- **OVRE: Overrun Error Interrupt Mask**
- **FRAME: Framing Error Interrupt Mask**
- **PARE: Parity Error Interrupt Mask**
- **TIMEOUT: Time-out Interrupt Mask**
- **TXEMPTY: TXEMPTY Interrupt Mask**
- **ITER/UNRE: Iteration or SPI Underrun Error Interrupt Enable**
- **TXBUFE: Buffer Empty Interrupt Mask**
- **RXBUFF: Buffer Full Interrupt Mask**
- **NACK/LINBK: Non Acknowledge or LIN Break Sent or LIN Break Received Interrupt Mask**
- **LINID: LIN Identifier Sent or LIN Identifier Received Interrupt Mask**
- **LINTC: LIN Transfer Completed Interrupt Mask**
- **CTSIC: Clear to Send Input Change Interrupt Mask**
- **MANE: Manchester Error Interrupt Mask**

- **LINBE: LIN Bus Error Interrupt Mask**
- **LINISFE: LIN Inconsistent Synch Field Error Interrupt Mask**
- **LINIPE: LIN Identifier Parity Interrupt Mask**
- **LINCE: LIN Checksum Error Interrupt Mask**
- **LINSNRE: LIN Slave Not Responding Error Interrupt Mask**

33.8.6 USART Channel Status Register

Name: US_CSR

Addresses: 0xFFF8C014 (0), 0xFFF90014 (1), 0xFFF94014 (2), 0xFFF98014 (3)

Access: Read-only

31	30	29	28	27	26	25	24
–	–	LINSNRE	LINCE	LINIPE	LINISFE	LINBE	MANERR

23	22	21	20	19	18	17	16
CTS	–	–	–	CTSIC	–	–	–

15	14	13	12	11	10	9	8
LINTC	LINID	NACK/LINBK	RXBUFF	TXBUFE	ITER/UNRE	TXEMPTY	TIMEOUT

7	6	5	4	3	2	1	0
PARE	FRAME	OVRE	ENDTX	ENDRX	RXBRK	TXRDY	RXRDY

- **RXRDY: Receiver Ready**

0: No complete character has been received since the last read of US_RHR or the receiver is disabled. If characters were being received when the receiver was disabled, RXRDY changes to 1 when the receiver is enabled.

1: At least one complete character has been received and US_RHR has not yet been read.

- **TXRDY: Transmitter Ready**

0: A character is in the US_THR waiting to be transferred to the Transmit Shift Register, or an STTBRK command has been requested, or the transmitter is disabled. As soon as the transmitter is enabled, TXRDY becomes 1.

1: There is no character in the US_THR.

- **RXBRK: Break Received/End of Break**

0: No Break received or End of Break detected since the last RSTSTA.

1: Break Received or End of Break detected since the last RSTSTA.

- **ENDRX: End of Receiver Transfer**

0: The End of Transfer signal from the Receive PDC channel is inactive.

1: The End of Transfer signal from the Receive PDC channel is active.

- **ENDTX: End of Transmitter Transfer**

0: The End of Transfer signal from the Transmit PDC channel is inactive.

1: The End of Transfer signal from the Transmit PDC channel is active.

- **OVRE: Overrun Error**

0: No overrun error has occurred since the last RSTSTA.

1: At least one overrun error has occurred since the last RSTSTA.

- **FRAME: Framing Error**

0: No stop bit has been detected low since the last RSTSTA.

1: At least one stop bit has been detected low since the last RSTSTA.

- **PARE: Parity Error**

0: No parity error has been detected since the last RSTSTA.

1: At least one parity error has been detected since the last RSTSTA.

- **TIMEOUT: Receiver Time-out**

0: There has not been a time-out since the last Start Time-out command (STTTO in US_CR) or the Time-out Register is 0.

1: There has been a time-out since the last Start Time-out command (STTTO in US_CR).

- **TXEMPTY: Transmitter Empty**

0: There are characters in either US_THR or the Transmit Shift Register, or the transmitter is disabled.

1: There are no characters in US_THR, nor in the Transmit Shift Register.

- **ITER/UNRE: Max number of Repetitions Reached or SPI Underrun Error**
  - If USART does not operate in SPI Slave Mode (USART_MODE ≠ 0xF):

ITER = 0: Maximum number of repetitions has not been reached since the last RSTSTA.

ITER = 1: Maximum number of repetitions has been reached since the last RSTSTA.

  - If USART operates in SPI Slave Mode (USART_MODE = 0xF):

UNRE = 0: No SPI underrun error has occurred since the last RSTSTA.

UNRE = 1: At least one SPI underrun error has occurred since the last RSTSTA.

- **TXBUFE: Transmission Buffer Empty**

0: The signal Buffer Empty from the Transmit PDC channel is inactive.

1: The signal Buffer Empty from the Transmit PDC channel is active.

- **RXBUFF: Reception Buffer Full**

0: The signal Buffer Full from the Receive PDC channel is inactive.

1: The signal Buffer Full from the Receive PDC channel is active.

- **NACK/LINBK Non Acknowledge or LIN Break Sent or LIN Break Received**
  - If USART does not operate in LIN Mode (USART_MODE ≠ 0xA AND ≠ 0xB):

0: No Non Acknowledge has not been detected since the last RSTNACK.

  - 1: At least one Non Acknowledge has been detected since the last RSTNACK.If USART operates in LIN Master Mode (USART_MODE = 0xA):

0: No LIN Break has been sent since the last RSTSTA.

  - 1:At least one LIN Break has been sent since the last RSTSTAIf USART operates in LIN Slave Mode (USART_MODE = 0xB):

0: No LIN Break has received sent since the last RSTSTA.

  - 1:At least one LIN Break has been received since the last RSTSTA.**LINID: LIN Identifier Sent or LIN Identifier Received**If USART operates in LIN Master Mode (USART_MODE = 0xA):

0: No LIN Identifier has been sent since the last RSTSTA.

  - 1:At least one LIN Identifier has been sent since the last RSTSTA.If USART operates in LIN Slave Mode (USART_MODE = 0xB):

0: No LIN Identifier has been received since the last RSTSTA.

1:At least one LIN Identifier has been received since the last RSTSTA

- **LINTC: LIN Transfer Completed**

0: The USART is idle or a LIN transfer is ongoing.

1: A LIN transfer has been completed since the last RSTSTA.

- **CTSIC: Clear to Send Input Change Flag**

0: No input change has been detected on the CTS pin since the last read of US_CSR.

1: At least one input change has been detected on the CTS pin since the last read of US_CSR.

- **CTS: Image of CTS Input**

0: CTS is at 0.

1: CTS is at 1.

- **MANERR: Manchester Error**

0: No Manchester error has been detected since the last RSTSTA.

1: At least one Manchester error has been detected since the last RSTSTA.

- **LINBE: LIN Bit Error**

0: No Bit Error has been detected since the last RSTSTA.

1: A Bit Error has been detected since the last RSTSTA.

- **LINISFE: LIN Inconsistent Synch Field Error**

0: No LIN Inconsistent Synch Field Error has been detected since the last RSTSTA

1: The USART is configured as a Slave node and a LIN Inconsistent Synch Field Error has been detected since the last RSTSTA.

- **LINIPE: LIN Identifier Parity Error**

0: No LIN Identifier Parity Error has been detected since the last RSTSTA.

1: A LIN Identifier Parity Error has been detected since the last RSTSTA.

- **LINCE: LIN Checksum Error**

0: No LIN Checksum Error has been detected since the last RSTSTA.

1: A LIN Checksum Error has been detected since the last RSTSTA.

- **LINSNRE: LIN Slave Not Responding Error**

0: No LIN Slave Not Responding Error has been detected since the last RSTSTA.

1: A LIN Slave Not Responding Error has been detected since the last RSTSTA.

33.8.7 USART Receive Holding Register

Name: US_RHR

Addresses: 0xFFF8C018 (0), 0xFFF90018 (1), 0xFFF94018 (2), 0xFFF98018 (3)

Access: Read-only

31	30	29	28	27	26	25	24
–	–	–	–	–	–	–	–

23	22	21	20	19	18	17	16
–	–	–	–	–	–	–	–

15	14	13	12	11	10	9	8
RXSYNH	–	–	–	–	–	–	RXCHR

7	6	5	4	3	2	1	0
RXCHR							

- **RXCHR: Received Character**

Last character received if RXRDY is set.

- **RXSYNH: Received Sync**

0: Last Character received is a Data.

1: Last Character received is a Command.

33.8.8 USART Transmit Holding Register

Name: US_THR

Addresses: 0xFFF8C01C (0), 0xFFF9001C (1), 0xFFF9401C (2), 0xFFF9801C (3)

Access: Write-only

31	30	29	28	27	26	25	24
–	–	–	–	–	–	–	–

23	22	21	20	19	18	17	16
–	–	–	–	–	–	–	–

15	14	13	12	11	10	9	8
TXSYNH	–	–	–	–	–	–	TXCHR

7	6	5	4	3	2	1	0
TXCHR							

- **TXCHR: Character to be Transmitted**

Next character to be transmitted after the current character if TXRDY is not set.

- **TXSYNH: Sync Field to be transmitted**

0: The next character sent is encoded as a data. Start Frame Delimiter is DATA SYNC.

1: The next character sent is encoded as a command. Start Frame Delimiter is COMMAND SYNC.

33.8.9 USART Baud Rate Generator Register

Name: US_BRGR

Addresses: 0xFFF8C020 (0), 0xFFF90020 (1), 0xFFF94020 (2), 0xFFF98020 (3)

Access: Read-write

31	30	29	28	27	26	25	24
–	–	–	–	–	–	–	–

23	22	21	20	19	18	17	16
–	–	–	–	–	FP		

15	14	13	12	11	10	9	8
CD							

7	6	5	4	3	2	1	0
CD							

- **CD: Clock Divider**

CD	USART_MODE ≠ ISO7816			USART_MODE = ISO7816
	SYNC = 0		SYNC = 1 or USART_MODE = SPI (Master or Slave)	
	OVER = 0	OVER = 1		
0	Baud Rate Clock Disabled			
1 to 65535	Baud Rate = Selected Clock/16/CD	Baud Rate = Selected Clock/8/CD	Baud Rate = Selected Clock /CD	Baud Rate = Selected Clock/CD/FI_DI_RATIO

- **FP: Fractional Part**

0: Fractional divider is disabled.

1 - 7: Baudrate resolution, defined by FP x 1/8.

33.8.10 USART Receiver Time-out Register

Name: US_RTOR

Addresses: 0xFFF8C024 (0), 0xFFF90024 (1), 0xFFF94024 (2), 0xFFF98024 (3)

Access: Read-write

31	30	29	28	27	26	25	24
–	–	–	–	–	–	–	–

23	22	21	20	19	18	17	16
–	–	–	–	–	–	–	TO

15	14	13	12	11	10	9	8
TO							

7	6	5	4	3	2	1	0
TO							

- **TO: Time-out Value**

0: The Receiver Time-out is disabled.

1 - 131071: The Receiver Time-out is enabled and the Time-out delay is TO x Bit Period.

33.8.11 USART Transmitter Timeguard Register

Name: US_TTGR

Addresses: 0xFFF8C028 (0), 0xFFF90028 (1), 0xFFF94028 (2), 0xFFF98028 (3)

Access: Read-write

31	30	29	28	27	26	25	24
–	–	–	–	–	–	–	–

23	22	21	20	19	18	17	16
–	–	–	–	–	–	–	–

15	14	13	12	11	10	9	8
–	–	–	–	–	–	–	–

7	6	5	4	3	2	1	0
TG							

- **TG: Timeguard Value**

0: The Transmitter Timeguard is disabled.

1 - 255: The Transmitter timeguard is enabled and the timeguard delay is TG x Bit Period.

33.8.12 USART FI DI RATIO Register

Name: US_FIDI

Addresses: 0xFFF8C040 (0), 0xFFF90040 (1), 0xFFF94040 (2), 0xFFF98040 (3)

Access: Read-write

Reset Value: 0x174

31	30	29	28	27	26	25	24
–	–	–	–	–	–	–	–

23	22	21	20	19	18	17	16
–	–	–	–	–	–	–	–

15	14	13	12	11	10	9	8
–	–	–	–	–	FI_DI_RATIO		

7	6	5	4	3	2	1	0
FI_DI_RATIO							

- **FI_DI_RATIO: FI Over DI Ratio Value**

0: If ISO7816 mode is selected, the Baud Rate Generator generates no signal.

1 - 2047: If ISO7816 mode is selected, the Baud Rate is the clock provided on SCK divided by FI_DI_RATIO.

33.8.13 USART Number of Errors Register

Name: US_NER

Addresses: 0xFFF8C044 (0), 0xFFF90044 (1), 0xFFF94044 (2), 0xFFF98044 (3)

Access: Read-only

31	30	29	28	27	26	25	24
–	–	–	–	–	–	–	–

23	22	21	20	19	18	17	16
–	–	–	–	–	–	–	–

15	14	13	12	11	10	9	8
–	–	–	–	–	–	–	–

7	6	5	4	3	2	1	0
NB_ERRORS							

- **NB_ERRORS: Number of Errors**

Total number of errors that occurred during an ISO7816 transfer. This register automatically clears when read.

33.8.14 USART IrDA FILTER Register

Name: US_IF

Addresses: 0xFFF8C04C (0), 0xFFF9004C (1), 0xFFF9404C (2), 0xFFF9804C (3)

Access: Read-write

31	30	29	28	27	26	25	24
–	–	–	–	–	–	–	–

23	22	21	20	19	18	17	16
–	–	–	–	–	–	–	–

15	14	13	12	11	10	9	8
–	–	–	–	–	–	–	–

7	6	5	4	3	2	1	0
IRDA_FILTER							

- **IRDA_FILTER: IrDA Filter**

Sets the filter of the IrDA demodulator.

33.8.15 USART Manchester Configuration Register

Name: US_MAN

Addresses: 0xFFF8C050 (0), 0xFFF90050 (1), 0xFFF94050 (2), 0xFFF98050 (3)

Access: Read-write

31	30	29	28	27	26	25	24
–	DRIFT	1	RX_MPOL	–	–	RX_PP	

23	22	21	20	19	18	17	16
–	–	–	–	RX_PL			

15	14	13	12	11	10	9	8
–	–	–	TX_MPOL	–	–	TX_PP	

7	6	5	4	3	2	1	0
–	–	–	–	TX_PL			

- **TX_PL: Transmitter Preamble Length**

0: The Transmitter Preamble pattern generation is disabled

1 - 15: The Preamble Length is TX_PL x Bit Period

- **TX_PP: Transmitter Preamble Pattern**

TX_PP		Preamble Pattern default polarity assumed (TX_MPOL field not set)
0	0	ALL_ONE
0	1	ALL_ZERO
1	0	ZERO_ONE
1	1	ONE_ZERO

- **TX_MPOL: Transmitter Manchester Polarity**

0: Logic Zero is coded as a zero-to-one transition, Logic One is coded as a one-to-zero transition.

1: Logic Zero is coded as a one-to-zero transition, Logic One is coded as a zero-to-one transition.

- **RX_PL: Receiver Preamble Length**

0: The receiver preamble pattern detection is disabled

1 - 15: The detected preamble length is RX_PL x Bit Period

- **RX_PP: Receiver Preamble Pattern detected**

RX_PP		Preamble Pattern default polarity assumed (RX_MPOL field not set)
0	0	ALL_ONE
0	1	ALL_ZERO
1	0	ZERO_ONE
1	1	ONE_ZERO

- **RX_MPOL: Receiver Manchester Polarity**

0: Logic Zero is coded as a zero-to-one transition, Logic One is coded as a one-to-zero transition.

1: Logic Zero is coded as a one-to-zero transition, Logic One is coded as a zero-to-one transition.

- **DRIFT: Drift compensation**

0: The USART can not recover from an important clock drift

1: The USART can recover from clock drift. The 16X clock mode must be enabled.

33.8.16 USART3 LIN Mode Register

Name: US_LINMR

Access: Read-write

31	30	29	28	27	26	25	24
–	–	–	–	–	–	–	–

23	22	21	20	19	18	17	16
–	–	–	–	–	–	–	PDCM

15	14	13	12	11	10	9	8
DLC							

7	6	5	4	3	2	1	0
WKUPTYP	FSDIS	DLM	CHKTYP	CHKDIS	PARDIS	NACT	

- **NACT: LIN Node Action**

NACT		Mode Description
0	0	PUBLISH: The USART transmits the response.
0	1	SUBSCRIBE: The USART receives the response.
1	0	IGNORE: The USART does not transmit and does not receive the response.
1	1	Reserved

- **PARDIS: Parity Disable**

0: In Master node configuration, the Identifier Parity is computed and sent automatically. In Master node and Slave node configuration, the parity is checked automatically.

1:Whatever the node configuration is, the Identifier parity is not computed/sent and it is not checked.

- **CHKDIS: Checksum Disable**

0: In Master node configuration, the checksum is computed and sent automatically. In Slave node configuration, the checksum is checked automatically.

1: Whatever the node configuration is, the checksum is not computed/sent and it is not checked.

- **CHKTYP: Checksum Type**

0: LIN 2.0 “Enhanced” Checksum

1: LIN 1.3 “Classic” Checksum

- **DLM: Data Length Mode**

0: The response data length is defined by the field DLC of this register.

1: The response data length is defined by the bits 5 and 6 of the Identifier (IDCHR in US_LINIR).

- **FDIS: Frame Slot Mode Disable**

0: The Frame Slot Mode is enabled.

1: The Frame Slot Mode is disabled.

- **WKUPTYP: Wakeup Signal Type**

0: setting the bit LINWKUP in the control register sends a LIN 2.0 wakeup signal.

1: setting the bit LINWKUP in the control register sends a LIN 1.3 wakeup signal.

- **DLC: Data Length Control**

0 - 255: Defines the response data length if DLM=0,in that case the response data length is equal to DLC+1 bytes.

- **PDCM: PDC Mode**

0: The LIN mode register US_LINMR is not written by the PDC.

1: The LIN mode register US_LINMR (excepting that flag) is written by the PDC.

33.8.17 USART3 LIN Identifier Register

Name: US_LINIR

Access: Read-write or Read-only

31	30	29	28	27	26	25	24
–	–	–	–	–	–	–	–

23	22	21	20	19	18	17	16
–	–	–	–	–	–	–	–

15	14	13	12	11	10	9	8
–	–	–	–	–	–	–	–

7	6	5	4	3	2	1	0
IDCHR							

- **IDCHR: Identifier Character**

If USART_MODE=0xA (Master node configuration):

IDCHR is Read-write and its value is the Identifier character to be transmitted.

if USART_MODE=0xB (Slave node configuration):

IDCHR is Read-only and its value is the last Identifier character that has been received.

34. Synchronous Serial Controller (SSC)

34.1 Description

The Atmel Synchronous Serial Controller (SSC) provides a synchronous communication link with external devices. It supports many serial synchronous communication protocols generally used in audio and telecom applications such as I2S, Short Frame Sync, Long Frame Sync, etc.

The SSC contains an independent receiver and transmitter and a common clock divider. The receiver and the transmitter each interface with three signals: the TD/RD signal for data, the TK/RK signal for the clock and the TF/RF signal for the Frame Sync. The transfers can be programmed to start automatically or on different events detected on the Frame Sync signal.

The SSC's high-level of programmability and its two dedicated PDC channels of up to 32 bits permit a continuous high bit rate data transfer without processor intervention.

The SSC's high-level of programmability and its use of DMA permit a continuous high bit rate data transfer without processor intervention.

Featuring connection to two PDC channels and connection to the DMA, the SSC permits interfacing with low processor overhead to the following:

- CODEC's in master or slave mode
- DAC through dedicated serial interface, particularly I2S
- Magnetic card reader

34.2 Embedded Characteristics

- Provides serial synchronous communication links used in audio and telecom applications (with CODECs in Master or Slave Modes, I^2S, TDM Buses, Magnetic Card Reader,...)
- Contains an independent receiver and transmitter and a common clock divider
- Offers a configurable frame sync and data length
- Receiver and transmitter can be programmed to start automatically or on detection of different event on the frame sync signal
- Receiver and transmitter include a data signal, a clock signal and a frame synchronization signal

34.3 Block Diagram

Figure 34-1. Block Diagram

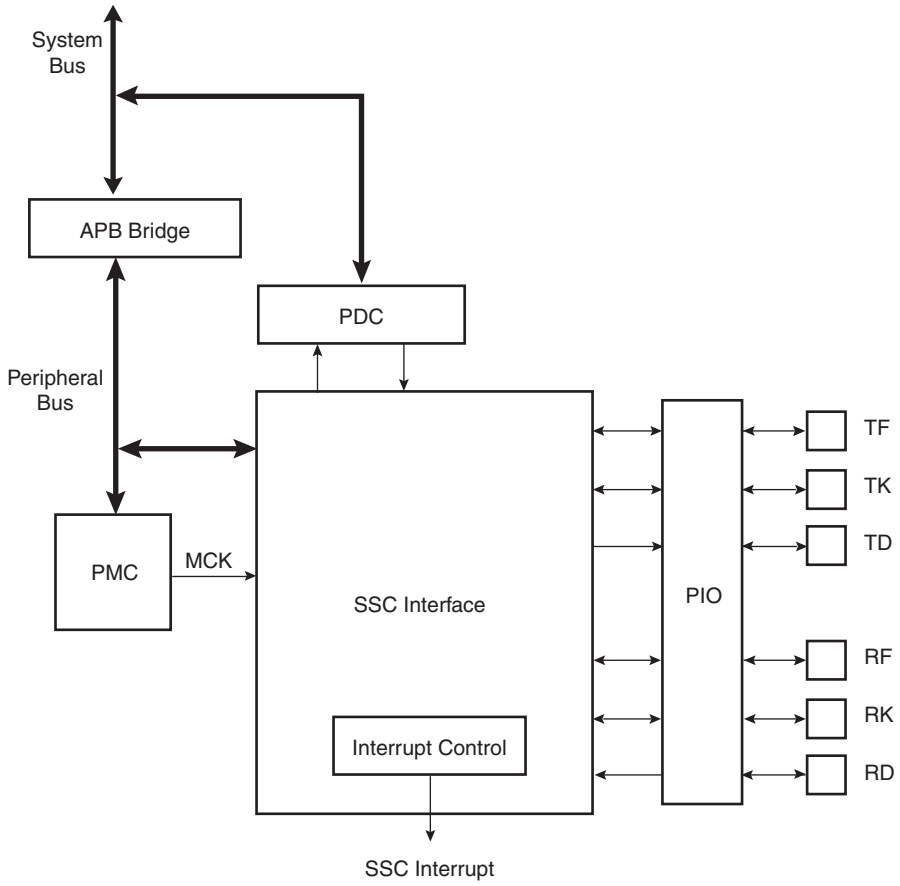

Figure 34-2. Block Diagram

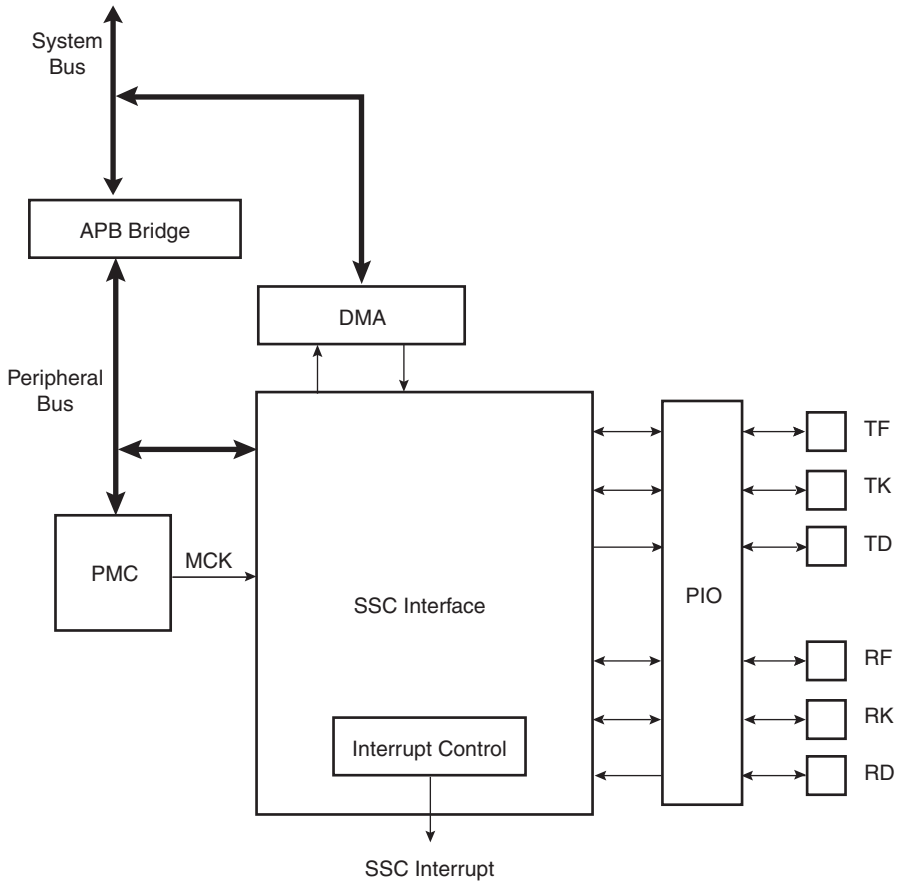

34.4 Application Block Diagram

Figure 34-3. Application Block Diagram

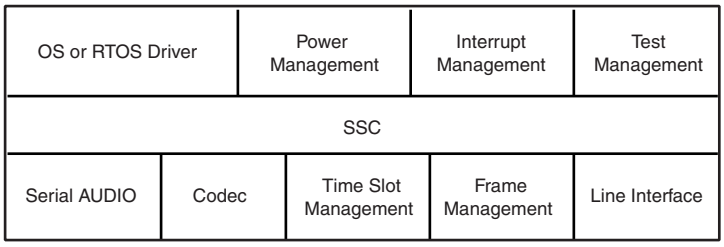

34.5 Pin Name List

Table 34-1. I/O Lines Description

Pin Name	Pin Description	Type
RF	Receiver Frame Synchro	Input/Output
RK	Receiver Clock	Input/Output
RD	Receiver Data	Input
TF	Transmitter Frame Synchro	Input/Output
TK	Transmitter Clock	Input/Output
TD	Transmitter Data	Output

34.6 Product Dependencies

34.6.1 I/O Lines

The pins used for interfacing the compliant external devices may be multiplexed with PIO lines.

Before using the SSC receiver, the PIO controller must be configured to dedicate the SSC receiver I/O lines to the SSC peripheral mode.

Before using the SSC transmitter, the PIO controller must be configured to dedicate the SSC transmitter I/O lines to the SSC peripheral mode.

Table 34-2. I/O Lines

Instance	Signal	I/O Line	Peripheral
SSC0	RD0	PD3	A
SSC0	RF0	PD5	A
SSC0	RK0	PD4	A
SSC0	TD0	PD2	A
SSC0	TF0	PD1	A
SSC0	TK0	PD0	A
SSC1	RD1	PD11	A
SSC1	RF1	PD15	A
SSC1	RK1	PD13	A
SSC1	TD1	PD10	A
SSC1	TF1	PD14	A
SSC1	TK1	PD12	A

34.6.2 Power Management

The SSC is not continuously clocked. The SSC interface may be clocked through the Power Management Controller (PMC), therefore the programmer must first configure the PMC to enable the SSC clock.

34.6.3 Interrupt

The SSC interface has an interrupt line connected to the Advanced Interrupt Controller (AIC). Handling interrupts requires programming the AICbefore configuring the SSC.

All SSC interrupts can be enabled/disabled configuring the SSC Interrupt mask register. Each pending and unmasked SSC interrupt will assert the SSC interrupt line. The SSC interrupt service routine can get the interrupt origin by reading the SSC interrupt status register.

Table 34-3. Peripheral IDs

Instance	ID
SSC0	16
SSC1	17

34.7 Functional Description

This chapter contains the functional description of the following: SSC Functional Block, Clock Management, Data format, Start, Transmitter, Receiver and Frame Sync.

The receiver and transmitter operate separately. However, they can work synchronously by programming the receiver to use the transmit clock and/or to start a data transfer when transmission starts. Alternatively, this can be done by programming the transmitter to use the receive clock and/or to start a data transfer when reception starts. The transmitter and the receiver can be programmed to operate with the clock signals provided on either the TK or RK pins. This allows the SSC to support many slave-mode data transfers. The maximum clock speed allowed on the TK and RK pins is the master clock divided by 2.

Figure 34-4. SSC Functional Block Diagram

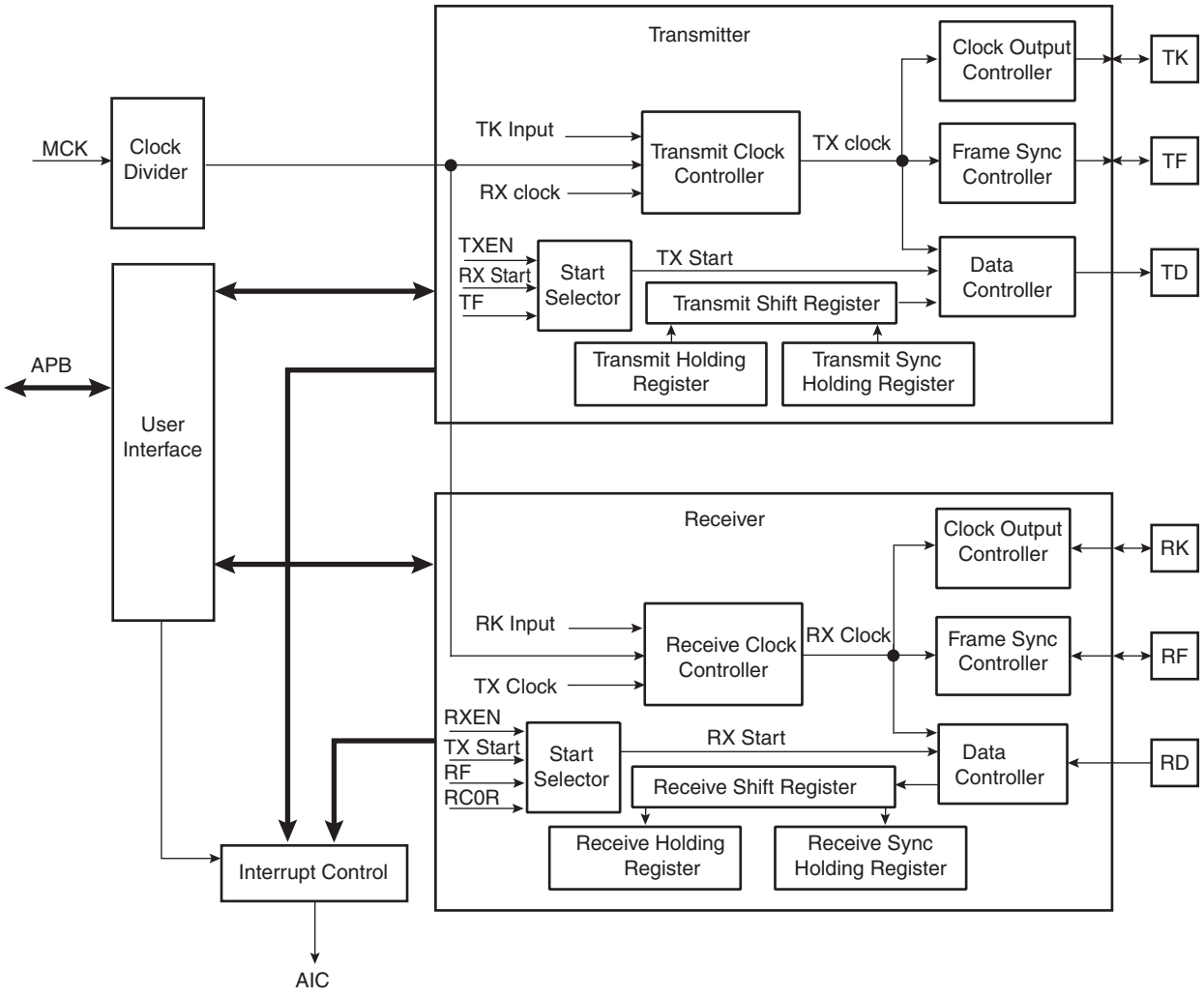

34.7.1 oClock Management

The transmitter clock can be generated by:

- an external clock received on the TK I/O pad
- the receiver clock
- the internal clock divider

The receiver clock can be generated by:

- an external clock received on the RK I/O pad
- the transmitter clock
- the internal clock divider

Furthermore, the transmitter block can generate an external clock on the TK I/O pad, and the receiver block can generate an external clock on the RK I/O pad.

This allows the SSC to support many Master and Slave Mode data transfers.

34.7.1.1 Clock Divider

Figure 34-5. Divided Clock Block Diagram

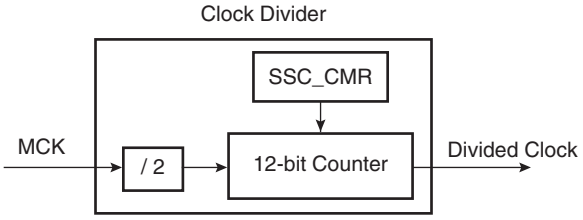

The Master Clock divider is determined by the 12-bit field DIV counter and comparator (so its maximal value is 4095) in the Clock Mode Register SSC_CMR, allowing a Master Clock division by up to 8190. The Divided Clock is provided to both the Receiver and Transmitter. When this field is programmed to 0, the Clock Divider is not used and remains inactive.

When DIV is set to a value equal to or greater than 1, the Divided Clock has a frequency of Master Clock divided by 2 times DIV. Each level of the Divided Clock has a duration of the Master Clock multiplied by DIV. This ensures a 50% duty cycle for the Divided Clock regardless of whether the DIV value is even or odd.

Figure 34-6. Divided Clock Generation

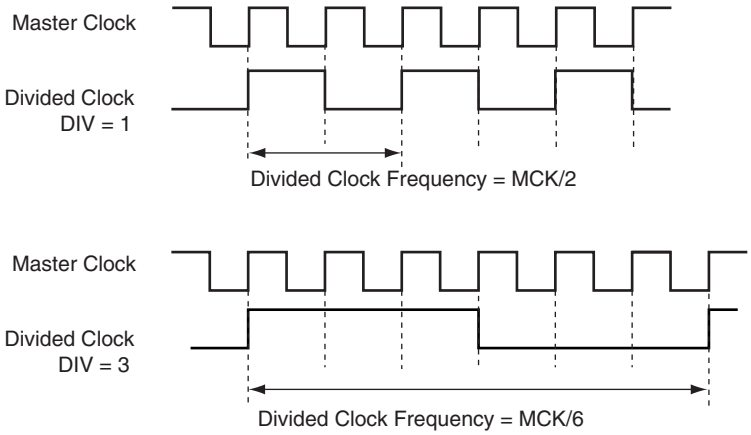

Table 34-4.

Maximum	Minimum
MCK / 2	MCK / 8190

34.7.1.2 Transmitter Clock Management

The transmitter clock is generated from the receiver clock or the divider clock or an external clock scanned on the TK I/O pad. The transmitter clock is selected by the CKS field in SSC_TCMR (Transmit Clock Mode Register). Transmit Clock can be inverted independently by the CKI bits in SSC_TCMR.

The transmitter can also drive the TK I/O pad continuously or be limited to the actual data transfer. The clock output is configured by the SSC_TCMR register. The Transmit Clock Inversion (CKI) bits have no effect on the clock outputs. Programming the TCMR register to select TK pin (CKS field) and at the same time Continuous Transmit Clock (CKO field) might lead to unpredictable results.

Figure 34-7. Transmitter Clock Management

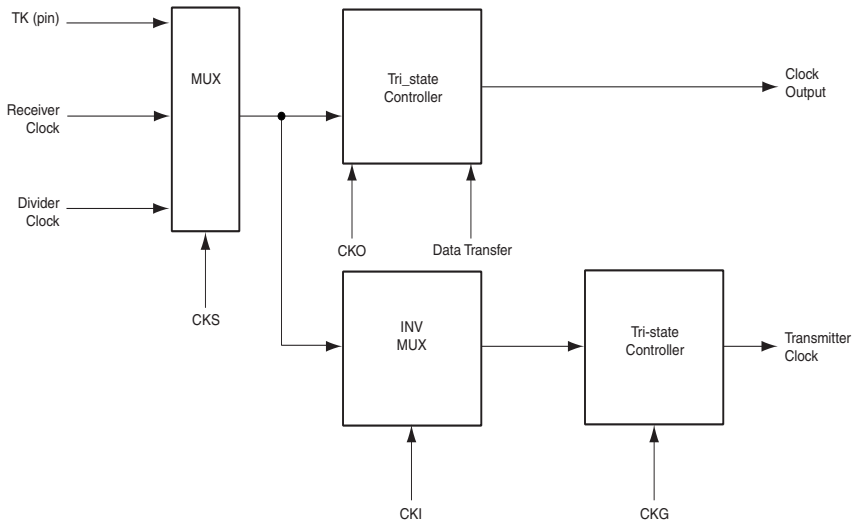

34.7.1.3 Receiver Clock Management

The receiver clock is generated from the transmitter clock or the divider clock or an external clock scanned on the RK I/O pad. The Receive Clock is selected by the CKS field in SSC_RCMR (Receive Clock Mode Register). Receive Clocks can be inverted independently by the CKI bits in SSC_RCMR.

The receiver can also drive the RK I/O pad continuously or be limited to the actual data transfer. The clock output is configured by the SSC_RCMR register. The Receive Clock Inversion (CKI) bits have no effect on the clock outputs. Programming the RCMR register to select RK pin (CKS field) and at the same time Continuous Receive Clock (CKO field) can lead to unpredictable results.

Figure 34-8. Receiver Clock Management

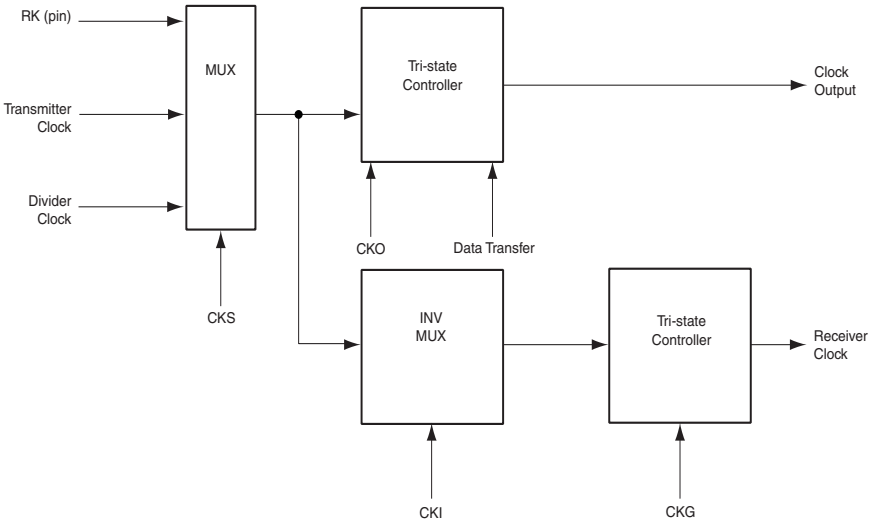

34.7.1.4 Serial Clock Ratio Considerations

The Transmitter and the Receiver can be programmed to operate with the clock signals provided on either the TK or RK pins. This allows the SSC to support many slave-mode data transfers. In this case, the maximum clock speed allowed on the RK pin is:

- Master Clock divided by 2 if Receiver Frame Synchro is input
- Master Clock divided by 3 if Receiver Frame Synchro is output

In addition, the maximum clock speed allowed on the TK pin is:

- Master Clock divided by 6 if Transmit Frame Synchro is input
- Master Clock divided by 2 if Transmit Frame Synchro is output

34.7.2 Transmitter Operations

A transmitted frame is triggered by a start event and can be followed by synchronization data before data transmission.

The start event is configured by setting the Transmit Clock Mode Register (SSC_TCMR). See “Start” on page 641.

The frame synchronization is configured setting the Transmit Frame Mode Register (SSC_TFMR). See “Frame Sync” on page 643.

To transmit data, the transmitter uses a shift register clocked by the transmitter clock signal and the start mode selected in the SSC_TCMR. Data is written by the application to the SSC_THR register then transferred to the shift register according to the data format selected.

When both the SSC_THR and the transmit shift register are empty, the status flag TXEMPTY is set in SSC_SR. When the Transmit Holding register is transferred in the Transmit shift register, the status flag TXRDY is set in SSC_SR and additional data can be loaded in the holding register.

Figure 34-9. Transmitter Block Diagram

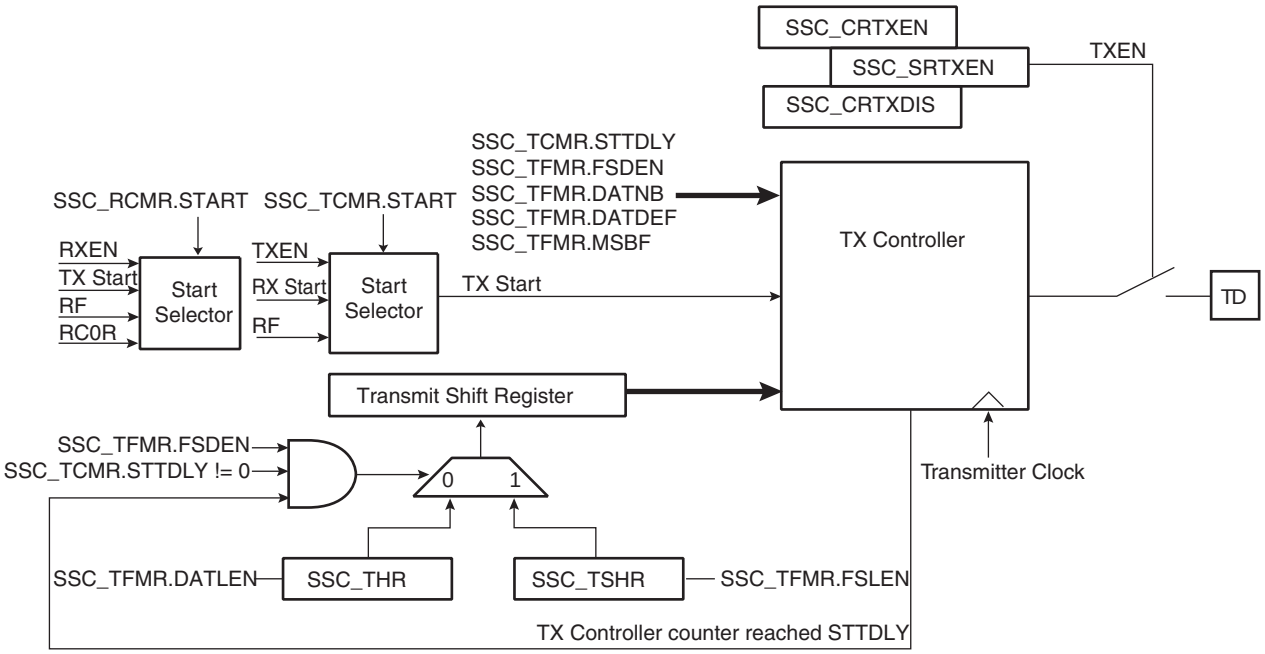

34.7.3 Receiver Operations

A received frame is triggered by a start event and can be followed by synchronization data before data transmission.

The start event is configured setting the Receive Clock Mode Register (SSC_RCMR). See “Start” on page 641.

The frame synchronization is configured setting the Receive Frame Mode Register (SSC_RFMR). See “Frame Sync” on page 643.

The receiver uses a shift register clocked by the receiver clock signal and the start mode selected in the SSC_RCMR. The data is transferred from the shift register depending on the data format selected.

When the receiver shift register is full, the SSC transfers this data in the holding register, the status flag RXRDY is set in SSC_SR and the data can be read in the receiver holding register. If another transfer occurs before read of the RHR register, the status flag OVERUN is set in SSC_SR and the receiver shift register is transferred in the RHR register.

Figure 34-10. Receiver Block Diagram

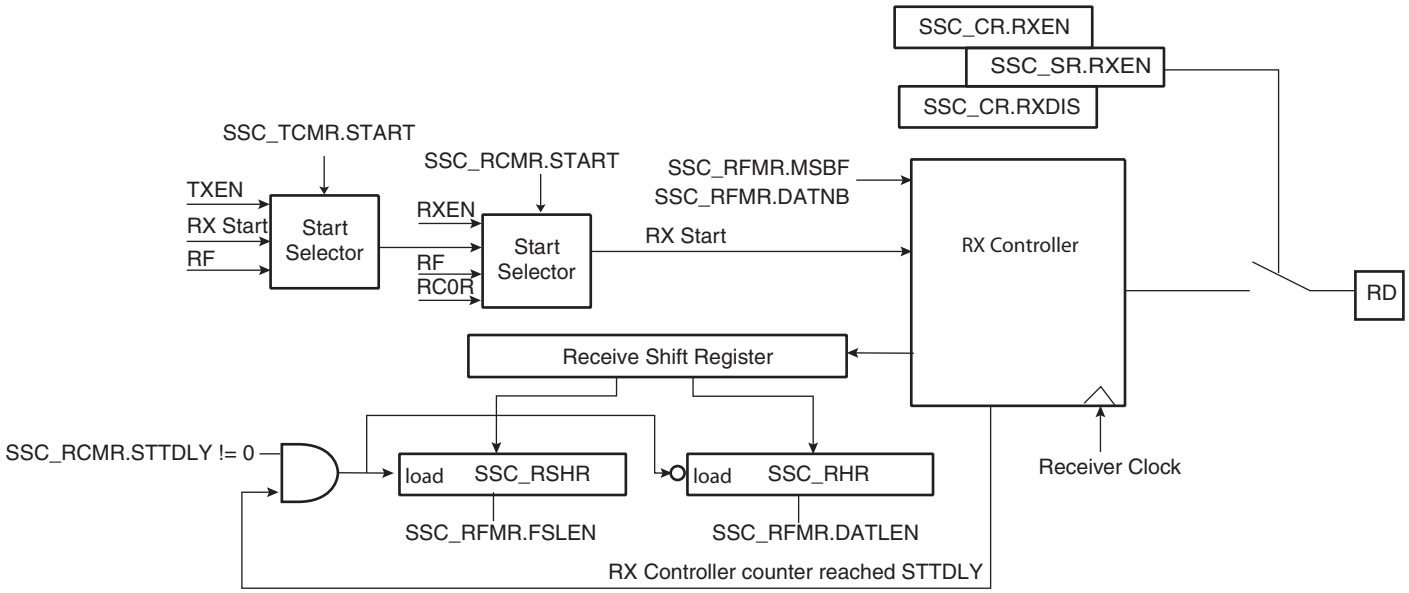

34.7.4 Start

The transmitter and receiver can both be programmed to start their operations when an event occurs, respectively in the Transmit Start Selection (START) field of SSC_TCMR and in the Receive Start Selection (START) field of SSC_RCMR.

Under the following conditions the start event is independently programmable:

- Continuous. In this case, the transmission starts as soon as a word is written in SSC_THR and the reception starts as soon as the Receiver is enabled.
- Synchronously with the transmitter/receiver
- On detection of a falling/rising edge on TF/RF
- On detection of a low level/high level on TF/RF
- On detection of a level change or an edge on TF/RF

A start can be programmed in the same manner on either side of the Transmit/Receive Clock Register (RCMR/TCMR). Thus, the start could be on TF (Transmit) or RF (Receive).

Moreover, the Receiver can start when data is detected in the bit stream with the Compare Functions.

Detection on TF/RF input/output is done by the field FSOS of the Transmit/Receive Frame Mode Register (TFMR/RFMR).

Figure 34-11. Transmit Start Mode

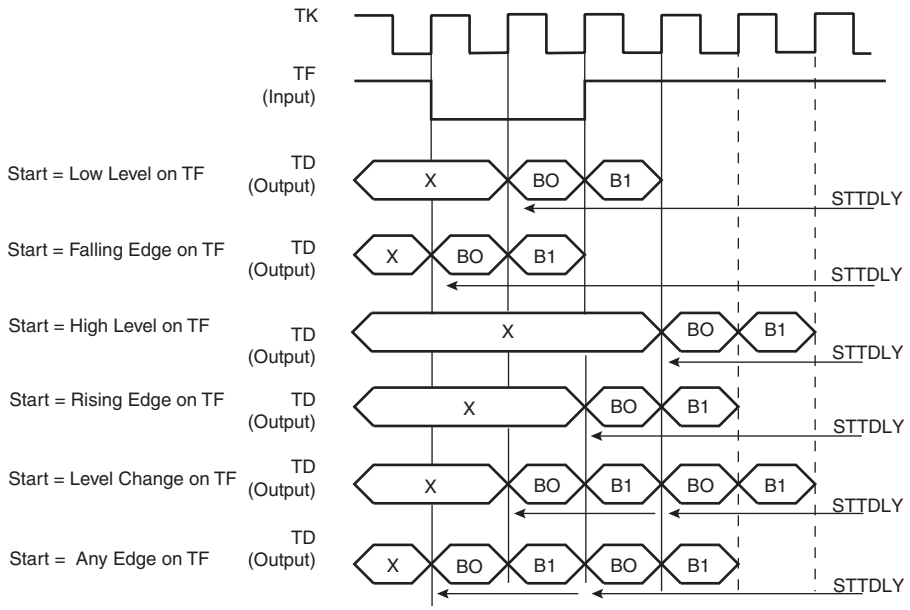

Figure 34-12. Receive Pulse/Edge Start Modes

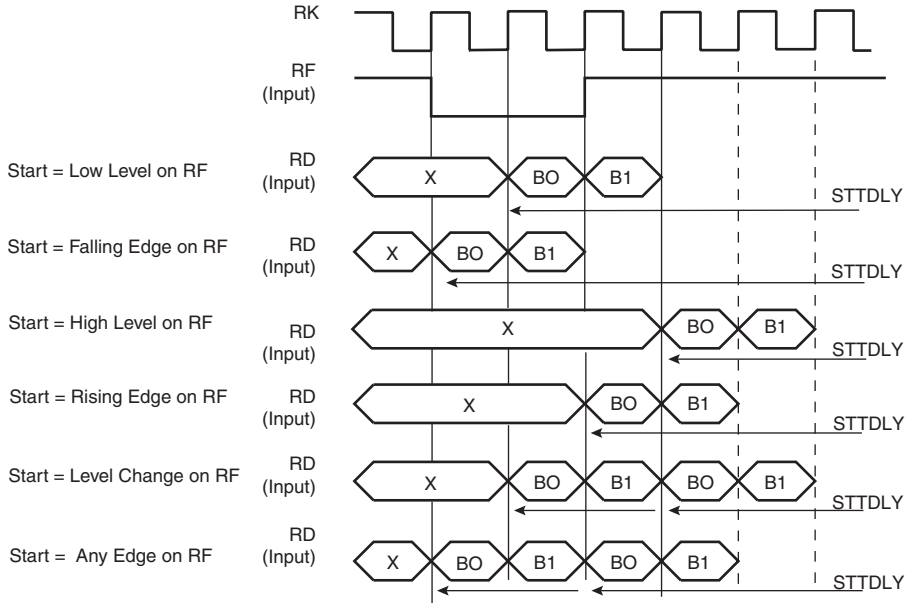

34.7.5 Frame Sync

The Transmitter and Receiver Frame Sync pins, TF and RF, can be programmed to generate different kinds of frame synchronization signals. The Frame Sync Output Selection (FSOS) field in the Receive Frame Mode Register (SSC_RFMR) and in the Transmit Frame Mode Register (SSC_TFMR) are used to select the required waveform.

- Programmable low or high levels during data transfer are supported.
- Programmable high levels before the start of data transfers or toggling are also supported.

If a pulse waveform is selected, the Frame Sync Length (FSLEN) field in SSC_RFMR and SSC_TFMR programs the length of the pulse, from 1 bit time up to 256 bit time.

The periodicity of the Receive and Transmit Frame Sync pulse output can be programmed through the Period Divider Selection (PERIOD) field in SSC_RCMR and SSC_TCMR.

34.7.5.1 Frame Sync Data

Frame Sync Data transmits or receives a specific tag during the Frame Sync signal.

During the Frame Sync signal, the Receiver can sample the RD line and store the data in the Receive Sync Holding Register and the transmitter can transfer Transmit Sync Holding Register in the Shifter Register. The data length to be sampled/shifted out during the Frame Sync signal is programmed by the FSLEN field in SSC_RFMR/SSC_TFMR and has a maximum value of 16.

Concerning the Receive Frame Sync Data operation, if the Frame Sync Length is equal to or lower than the delay between the start event and the actual data reception, the data sampling operation is performed in the Receive Sync Holding Register through the Receive Shift Register.

The Transmit Frame Sync Operation is performed by the transmitter only if the bit Frame Sync Data Enable (FSDEN) in SSC_TFMR is set. If the Frame Sync length is equal to or lower than the delay between the start event and the actual data transmission, the normal transmission has priority and the data contained in the Transmit Sync Holding Register is transferred in the Transmit Register, then shifted out.

34.7.5.2 Frame Sync Edge Detection

The Frame Sync Edge detection is programmed by the FSEDGE field in SSC_RFMR/SSC_TFMR. This sets the corresponding flags RXSYN/TXSYN in the SSC Status Register (SSC_SR) on frame synchro edge detection (signals RF/TF).

34.7.6 Receive Compare Modes

Figure 34-13. Receive Compare Modes

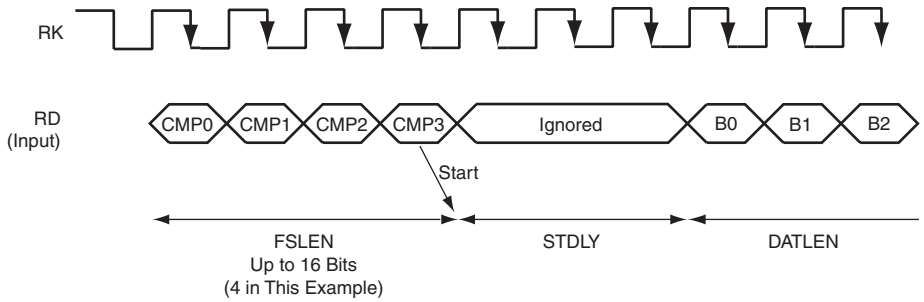

34.7.6.1 Compare Functions

Length of the comparison patterns (Compare 0, Compare 1) and thus the number of bits they are compared to is defined by FSLEN, but with a maximum value of 16 bits. Comparison is always done by comparing the last bits received with the comparison pattern. Compare 0 can be one start event of the Receiver. In this case, the receiver

compares at each new sample the last bits received at the Compare 0 pattern contained in the Compare 0 Register (SSC_RC0R). When this start event is selected, the user can program the Receiver to start a new data transfer either by writing a new Compare 0, or by receiving continuously until Compare 1 occurs. This selection is done with the bit (STOP) in SSC_RCMR.

34.7.7 Data Format

The data framing format of both the transmitter and the receiver are programmable through the Transmitter Frame Mode Register (SSC_TFMR) and the Receiver Frame Mode Register (SSC_RFMR). In either case, the user can independently select:

- the event that starts the data transfer (START)
- the delay in number of bit periods between the start event and the first data bit (STTDLY)
- the length of the data (DATLEN)
- the number of data to be transferred for each start event (DATNB).
- the length of synchronization transferred for each start event (FSLEN)
- the bit sense: most or lowest significant bit first (MSBF)

Additionally, the transmitter can be used to transfer synchronization and select the level driven on the TD pin while not in data transfer operation. This is done respectively by the Frame Sync Data Enable (FSDEN) and by the Data Default Value (DATDEF) bits in SSC_TFMR.

Table 34-5. Data Frame Registers

Transmitter	Receiver	Field	Length	Comment
SSC_TFMR	SSC_RFMR	DATLEN	Up to 32	Size of word
SSC_TFMR	SSC_RFMR	DATNB	Up to 16	Number of words transmitted in frame
SSC_TFMR	SSC_RFMR	MSBF		Most significant bit first
SSC_TFMR	SSC_RFMR	FSLEN	Up to 16	Size of Synchro data register
SSC_TFMR		DATDEF	0 or 1	Data default value ended
SSC_TFMR		FSDEN		Enable send SSC_TSHR
SSC_TCMR	SSC_RCMR	PERIOD	Up to 512	Frame size
SSC_TCMR	SSC_RCMR	STTDLY	Up to 255	Size of transmit start delay

Figure 34-14. Transmit and Receive Frame Format in Edge/Pulse Start Modes

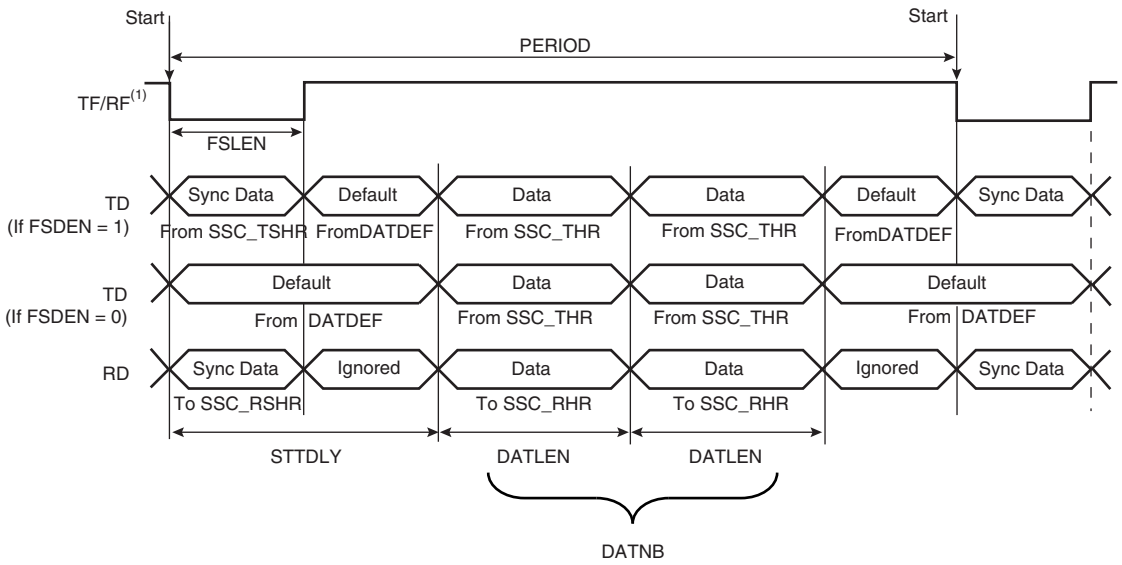

Note: 1. Example of input on falling edge of TF/RF.

Figure 34-15. Transmit Frame Format in Continuous Mode

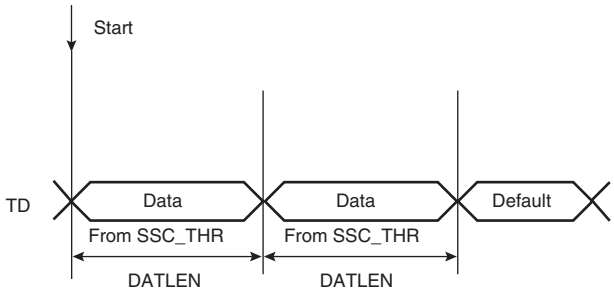

Start: 1. TXEMPTY set to 1
2. Write into the SSC_THR

Note: 1. STTDLY is set to 0. In this example, SSC_THR is loaded twice. FSDEN value has no effect on the transmission. SyncData cannot be output in continuous mode.

Figure 34-16. Receive Frame Format in Continuous Mode

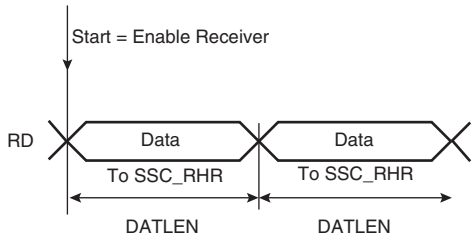

Note: 1. STTDLY is set to 0.

34.7.8 Loop Mode

The receiver can be programmed to receive transmissions from the transmitter. This is done by setting the Loop Mode (LOOP) bit in SSC_RFMR. In this case, RD is connected to TD, RF is connected to TF and RK is connected to TK.

34.7.9 Interrupt

Most bits in SSC_SR have a corresponding bit in interrupt management registers.

The SSC can be programmed to generate an interrupt when it detects an event. The interrupt is controlled by writing SSC_IER (Interrupt Enable Register) and SSC_IDR (Interrupt Disable Register) These registers enable and disable, respectively, the corresponding interrupt by setting and clearing the corresponding bit in SSC_IMR (Interrupt Mask Register), which controls the generation of interrupts by asserting the SSC interrupt line connected to the AIC.

Figure 34-17. Interrupt Block Diagram

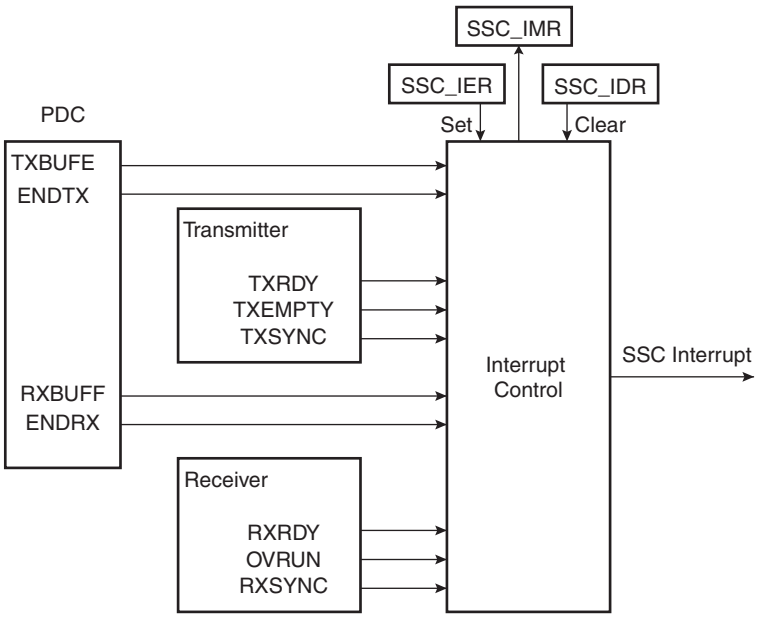

Figure 34-18. Interrupt Block Diagram

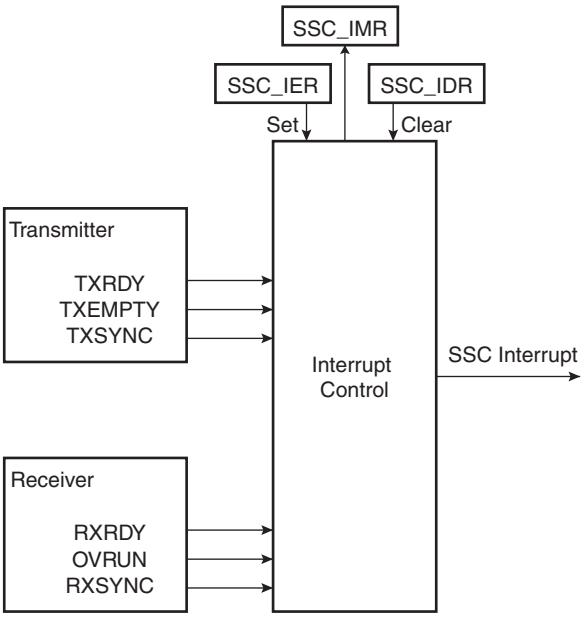

34.8 SSC Application Examples

The SSC can support several serial communication modes used in audio or high speed serial links. Some standard applications are shown in the following figures. All serial link applications supported by the SSC are not listed here.

Figure 34-19. Audio Application Block Diagram

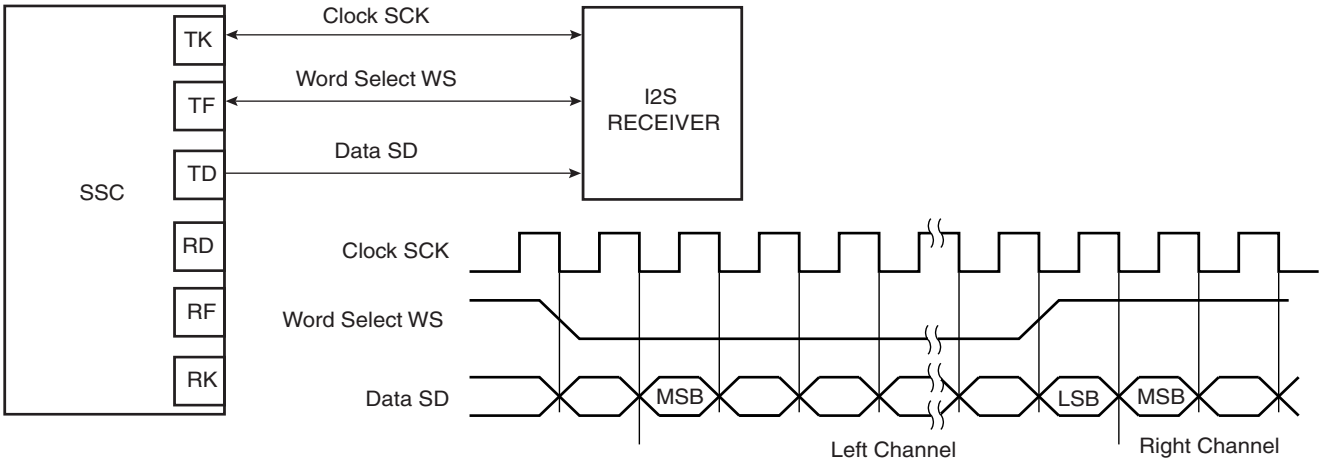

Figure 34-20. Codec Application Block Diagram

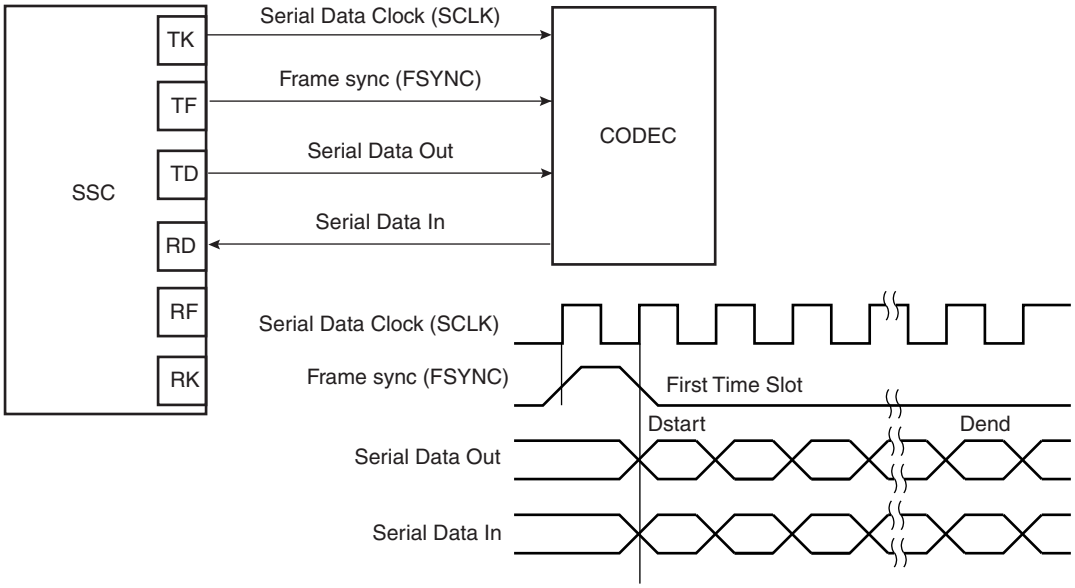

Figure 34-21. Time Slot Application Block Diagram

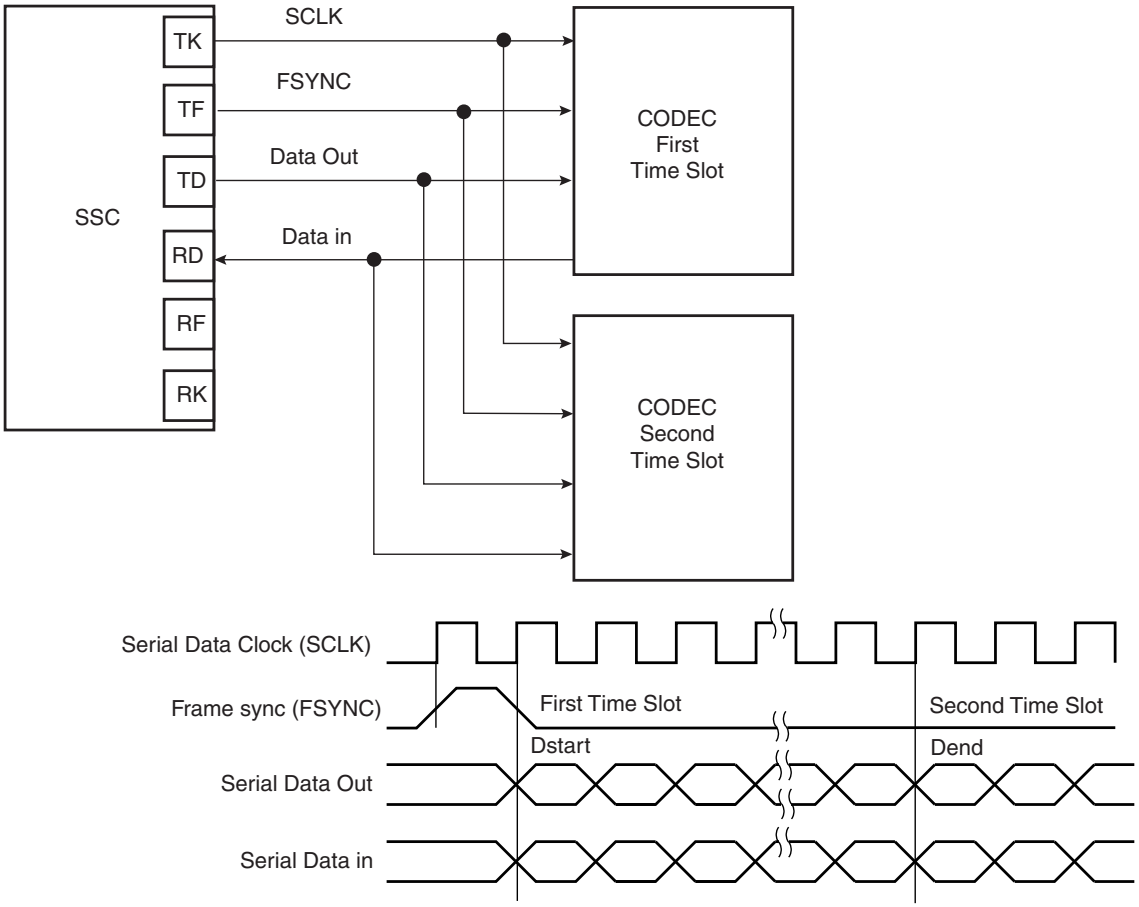

34.9 Synchronous Serial Controller (SSC) User Interface

Table 34-6. Register Mapping

Offset	Register	Name	Access	Reset
0x0	Control Register	SSC_CR	Write-only	–
0x4	Clock Mode Register	SSC_CMR	Read-write	0x0
0x8	Reserved	–	–	–
0xC	Reserved	–	–	–
0x10	Receive Clock Mode Register	SSC_RCMR	Read-write	0x0
0x14	Receive Frame Mode Register	SSC_RFMR	Read-write	0x0
0x18	Transmit Clock Mode Register	SSC_TCMR	Read-write	0x0
0x1C	Transmit Frame Mode Register	SSC_TFMR	Read-write	0x0
0x20	Receive Holding Register	SSC_RHR	Read-only	0x0
0x24	Transmit Holding Register	SSC_THR	Write-only	–
0x28	Reserved	–	–	–
0x2C	Reserved	–	–	–
0x30	Receive Sync. Holding Register	SSC_RSHR	Read-only	0x0
0x34	Transmit Sync. Holding Register	SSC_TSHR	Read-write	0x0
0x38	Receive Compare 0 Register	SSC_RC0R	Read-write	0x0
0x3C	Receive Compare 1 Register	SSC_RC1R	Read-write	0x0
0x40	Status Register	SSC_SR	Read-only	0x000000CC
0x44	Interrupt Enable Register	SSC_IER	Write-only	–
0x48	Interrupt Disable Register	SSC_IDR	Write-only	–
0x4C	Interrupt Mask Register	SSC_IMR	Read-only	0x0
0x50-0xFC	Reserved	–	–	–
0x100- 0x124	Reserved for Peripheral Data Controller (PDC)	–	–	–

34.9.1 SSC Control Register

Name: SSC_CR:

Addresses: 0xFFF9C000 (0), 0xFFFA0000 (1)

Access: Write-only

31	30	29	28	27	26	25	24
–	–	–	–	–	–	–	–

23	22	21	20	19	18	17	16
–	–	–	–	–	–	–	–

15	14	13	12	11	10	9	8
SWRST	–	–	–	–	–	TXDIS	TXEN

7	6	5	4	3	2	1	0
–	–	–	–	–	–	RXDIS	RXEN

- **RXEN: Receive Enable**

0 = No effect.

1 = Enables Receive if RXDIS is not set.

- **RXDIS: Receive Disable**

0 = No effect.

1 = Disables Receive. If a character is currently being received, disables at end of current character reception.

- **TXEN: Transmit Enable**

0 = No effect.

1 = Enables Transmit if TXDIS is not set.

- **TXDIS: Transmit Disable**

0 = No effect.

1 = Disables Transmit. If a character is currently being transmitted, disables at end of current character transmission.

- **SWRST: Software Reset**

0 = No effect.

1 = Performs a software reset. Has priority on any other bit in SSC_CR.

34.9.2 SSC Clock Mode Register

Name: SSC_CMR

Addresses: 0xFFF9C004 (0), 0xFFFA0004 (1)

Access: Read-write

31	30	29	28	27	26	25	24
–	–	–	–	–	–	–	–

23	22	21	20	19	18	17	16
–	–	–	–	–	–	–	–

15	14	13	12	11	10	9	8
–	–	–	–	DIV			

7	6	5	4	3	2	1	0
DIV							

- **DIV: Clock Divider**

0 = The Clock Divider is not active.

Any Other Value: The Divided Clock equals the Master Clock divided by 2 times DIV. The maximum bit rate is MCK/2. The minimum bit rate is MCK/2 x 4095 = MCK/8190.

34.9.3 SSC Receive Clock Mode Register

Name: SSC_RCMR

Addresses: 0xFFF9C010 (0), 0xFFFA0010 (1)

Access: Read-write

31	30	29	28	27	26	25	24
PERIOD							

23	22	21	20	19	18	17	16
STTDLY							

15	14	13	12	11	10	9	8
–	–	–	STOP	START			

7	6	5	4	3	2	1	0
CKG		CKI	CKO			CKS	

- **CKS: Receive Clock Selection**

CKS	Selected Receive Clock
0x0	Divided Clock
0x1	TK Clock signal
0x2	RK pin
0x3	Reserved

- **CKO: Receive Clock Output Mode Selection**

CKO	Receive Clock Output Mode	RK pin
0x0	None	Input-only
0x1	Continuous Receive Clock	Output
0x2	Receive Clock only during data transfers	Output
0x3-0x7	Reserved	

- **CKI: Receive Clock Inversion**

0 = The data inputs (Data and Frame Sync signals) are sampled on Receive Clock falling edge. The Frame Sync signal output is shifted out on Receive Clock rising edge.

1 = The data inputs (Data and Frame Sync signals) are sampled on Receive Clock rising edge. The Frame Sync signal output is shifted out on Receive Clock falling edge.

CKI affects only the Receive Clock and not the output clock signal.

- **CKG: Receive Clock Gating Selection**

CKG	Receive Clock Gating
0x0	None, continuous clock
0x1	Receive Clock enabled only if RF Low
0x2	Receive Clock enabled only if RF High
0x3	Reserved

- **START: Receive Start Selection**

START	Receive Start
0x0	Continuous, as soon as the receiver is enabled, and immediately after the end of transfer of the previous data.
0x1	Transmit start
0x2	Detection of a low level on RF signal
0x3	Detection of a high level on RF signal
0x4	Detection of a falling edge on RF signal
0x5	Detection of a rising edge on RF signal
0x6	Detection of any level change on RF signal
0x7	Detection of any edge on RF signal
0x8	Compare 0
0x9-0xF	Reserved

- **STOP: Receive Stop Selection**

0 = After completion of a data transfer when starting with a Compare 0, the receiver stops the data transfer and waits for a new compare 0.

1 = After starting a receive with a Compare 0, the receiver operates in a continuous mode until a Compare 1 is detected.

- **STTDLY: Receive Start Delay**

If STTDLY is not 0, a delay of STTDLY clock cycles is inserted between the start event and the actual start of reception. When the Receiver is programmed to start synchronously with the Transmitter, the delay is also applied.

Note: It is very important that STTDLY be set carefully. If STTDLY must be set, it should be done in relation to TAG (Receive Sync Data) reception.

- **PERIOD: Receive Period Divider Selection**

This field selects the divider to apply to the selected Receive Clock in order to generate a new Frame Sync Signal. If 0, no PERIOD signal is generated. If not 0, a PERIOD signal is generated each 2 x (PERIOD+1) Receive Clock.

34.9.4 SSC Receive Frame Mode Register

Name: SSC_RFMR

Addresses: 0xFFF9C014 (0), 0xFFFA0014 (1)

Access: Read-write

31	30	29	28	27	26	25	24
FSLEN_EXT	FSLEN_EXT	FSLEN_EXT	FSLEN_EXT	–	–	–	FSEDGE

23	22	21	20	19	18	17	16
–	FSOS			FSLEN			

15	14	13	12	11	10	9	8
–	–	–	–	DATNB			

7	6	5	4	3	2	1	0
MSBF	–	LOOP	DATLEN				

- **DATLEN: Data Length**

0 = Forbidden value (1-bit data length not supported).
Any other value: The bit stream contains DATLEN + 1 data bits. Moreover, it defines the transfer size performed by the PDC assigned to the Receiver. If DATLEN is lower or equal to 7, data transfers are in bytes. If DATLEN is between 8 and 15 (included), half-words are transferred, and for any other value, 32-bit words are transferred.

- **LOOP: Loop Mode**

0 = Normal operating mode.

1 = RD is driven by TD, RF is driven by TF and TK drives RK.

- **MSBF: Most Significant Bit First**

0 = The lowest significant bit of the data register is sampled first in the bit stream.

1 = The most significant bit of the data register is sampled first in the bit stream.

- **DATNB: Data Number per Frame**

This field defines the number of data words to be received after each transfer start, which is equal to (DATNB + 1).

- **FSLEN: Receive Frame Sync Length**

This field defines the number of bits sampled and stored in the Receive Sync Data Register. When this mode is selected by the START field in the Receive Clock Mode Register, it also determines the length of the sampled data to be compared to the Compare 0 or Compare 1 register.

This field is used with FSLEN_EXT to determine the pulse length of the Receive Frame Sync signal.

Pulse length is equal to FSLEN + (FSLEN_EXT * 16) + 1 Receive Clock periods.

- **FSOS: Receive Frame Sync Output Selection**

FSOS	Selected Receive Frame Sync Signal	RF Pin
0x0	None	Input-only
0x1	Negative Pulse	Output
0x2	Positive Pulse	Output
0x3	Driven Low during data transfer	Output
0x4	Driven High during data transfer	Output
0x5	Toggling at each start of data transfer	Output
0x6-0x7	Reserved	Undefined

- **FSEDGE: Frame Sync Edge Detection**

Determines which edge on Frame Sync will generate the interrupt RXSYN in the SSC Status Register.

FSEDGE	Frame Sync Edge Detection
0x0	Positive Edge Detection
0x1	Negative Edge Detection

- **FSLEN_EXT: FSLEN Field Extension**

Extends FSLEN field. For details, refer to FSLEN bit description on page 655.

34.9.5 SSC Transmit Clock Mode Register

Name: SSC_TCMR

Addresses: 0xFFF9C018 (0), 0xFFFA0018 (1)

Access: Read-write

31	30	29	28	27	26	25	24
PERIOD							

23	22	21	20	19	18	17	16
STTDLY							

15	14	13	12	11	10	9	8
–	–	–	–	START			

7	6	5	4	3	2	1	0
CKG		CKI	CKO			CKS	

- **CKS: Transmit Clock Selection**

CKS	Selected Transmit Clock
0x0	Divided Clock
0x1	RK Clock signal
0x2	TK Pin
0x3	Reserved

- **CKO: Transmit Clock Output Mode Selection**

CKO	Transmit Clock Output Mode	TK pin
0x0	None	Input-only
0x1	Continuous Transmit Clock	Output
0x2	Transmit Clock only during data transfers	Output
0x3-0x7	Reserved	

- **CKI: Transmit Clock Inversion**

0 = The data outputs (Data and Frame Sync signals) are shifted out on Transmit Clock falling edge. The Frame sync signal input is sampled on Transmit clock rising edge.

1 = The data outputs (Data and Frame Sync signals) are shifted out on Transmit Clock rising edge. The Frame sync signal input is sampled on Transmit clock falling edge.

CKI affects only the Transmit Clock and not the output clock signal.

- **CKG: Transmit Clock Gating Selection**

CKG	Transmit Clock Gating
0x0	None, continuous clock
0x1	Transmit Clock enabled only if TF Low
0x2	Transmit Clock enabled only if TF High
0x3	Reserved

- **START: Transmit Start Selection**

START	Transmit Start
0x0	Continuous, as soon as a word is written in the SSC_THR Register (if Transmit is enabled), and immediately after the end of transfer of the previous data.
0x1	Receive start
0x2	Detection of a low level on TF signal
0x3	Detection of a high level on TF signal
0x4	Detection of a falling edge on TF signal
0x5	Detection of a rising edge on TF signal
0x6	Detection of any level change on TF signal
0x7	Detection of any edge on TF signal
0x8 - 0xF	Reserved

- **STTDLY: Transmit Start Delay**

If STTDLY is not 0, a delay of STTDLY clock cycles is inserted between the start event and the actual start of transmission of data. When the Transmitter is programmed to start synchronously with the Receiver, the delay is also applied.

Note: STTDLY must be set carefully. If STTDLY is too short in respect to TAG (Transmit Sync Data) emission, data is emitted instead of the end of TAG.

- **PERIOD: Transmit Period Divider Selection**

This field selects the divider to apply to the selected Transmit Clock to generate a new Frame Sync Signal. If 0, no period signal is generated. If not 0, a period signal is generated at each 2 x (PERIOD+1) Transmit Clock.

34.9.6 SSC Transmit Frame Mode Register

Name: SSC_TFMR

Addresses: 0xFFF9C01C (0), 0xFFFA001C (1)

Access: Read-write

31	30	29	28	27	26	25	24
FSLEN_EXT	FSLEN_EXT	FSLEN_EXT	FSLEN_EXT	–	–	–	FSEDGE

23	22	21	20	19	18	17	16
FSDEN	FSOS			FSLEN			

15	14	13	12	11	10	9	8
–	–	–	–	DATNB			

7	6	5	4	3	2	1	0
MSBF	–	DATDEF	DATLEN				

- **DATLEN: Data Length**

0 = Forbidden value (1-bit data length not supported).

Any other value: The bit stream contains DATLEN + 1 data bits. Moreover, it defines the transfer size performed by the PDC assigned to the Transmit. If DATLEN is lower or equal to 7, data transfers are bytes, if DATLEN is between 8 and 15 (included), half-words are transferred, and for any other value, 32-bit words are transferred.

- **DATDEF: Data Default Value**

This bit defines the level driven on the TD pin while out of transmission. Note that if the pin is defined as multi-drive by the PIO Controller, the pin is enabled only if the SCC TD output is 1.

- **MSBF: Most Significant Bit First**

0 = The lowest significant bit of the data register is shifted out first in the bit stream.

1 = The most significant bit of the data register is shifted out first in the bit stream.

- **DATNB: Data Number per frame**

This field defines the number of data words to be transferred after each transfer start, which is equal to (DATNB +1).

- **FSLEN: Transmit Frame Syn Length**

This field defines the length of the Transmit Frame Sync signal and the number of bits shifted out from the Transmit Sync Data Register if FSDEN is 1.

This field is used with FSLEN_EXT to determine the pulse length of the Transmit Frame Sync signal.

Pulse length is equal to FSLEN + (FSLEN_EXT * 16) + 1 Transmit Clock period.

- **FSOS: Transmit Frame Sync Output Selection**

FSOS	Selected Transmit Frame Sync Signal	TF Pin
0x0	None	Input-only
0x1	Negative Pulse	Output
0x2	Positive Pulse	Output
0x3	Driven Low during data transfer	Output
0x4	Driven High during data transfer	Output
0x5	Toggling at each start of data transfer	Output
0x6-0x7	Reserved	Undefined

- **FSDEN: Frame Sync Data Enable**

0 = The TD line is driven with the default value during the Transmit Frame Sync signal.

1 = SSC_TSHR value is shifted out during the transmission of the Transmit Frame Sync signal.

- **FSEDGE: Frame Sync Edge Detection**

Determines which edge on frame sync will generate the interrupt TXSYN (Status Register).

FSEDGE	Frame Sync Edge Detection
0x0	Positive Edge Detection
0x1	Negative Edge Detection

- **FSLEN_EXT: FSLEN Field Extension**

Extends FSLEN field. For details, refer to FSLEN bit description on page 659.

34.9.7 SSC Receive Holding Register

Name: SSC_RHR

Addresses: 0xFFF9C020 (0), 0xFFFA0020 (1)

Access: Read-only

31	30	29	28	27	26	25	24
RDAT							

23	22	21	20	19	18	17	16
RDAT							

15	14	13	12	11	10	9	8
RDAT							

7	6	5	4	3	2	1	0
RDAT							

- **RDAT: Receive Data**

Right aligned regardless of the number of data bits defined by DATLEN in SSC_RFMR.

34.9.8 SSC Transmit Holding Register

Name: SSC_THR

Addresses: 0xFFF9C024 (0), 0xFFFA0024 (1)

Access: Write-only

31	30	29	28	27	26	25	24
TDAT							

23	22	21	20	19	18	17	16
TDAT							

15	14	13	12	11	10	9	8
TDAT							

7	6	5	4	3	2	1	0
TDAT							

- **TDAT: Transmit Data**

Right aligned regardless of the number of data bits defined by DATLEN in SSC_TFMR.

34.9.9 SSC Receive Synchronization Holding Register

Name: SSC_RSHR

Addresses: 0xFFF9C030 (0), 0xFFFA0030 (1)

Access: Read-only

31	30	29	28	27	26	25	24
–	–	–	–	–	–	–	–

23	22	21	20	19	18	17	16
–	–	–	–	–	–	–	–

15	14	13	12	11	10	9	8
RSDAT							

7	6	5	4	3	2	1	0
RSDAT							

- **RSDAT: Receive Synchronization Data**

34.9.10 SSC Transmit Synchronization Holding Register

Name: SSC_TSHR

Addresses: 0xFFF9C034 (0), 0xFFFA0034 (1)

Access: Read-write

31	30	29	28	27	26	25	24
–	–	–	–	–	–	–	–

23	22	21	20	19	18	17	16
–	–	–	–	–	–	–	–

15	14	13	12	11	10	9	8
TSDAT							

7	6	5	4	3	2	1	0
TSDAT							

- **TSDAT: Transmit Synchronization Data**

34.9.11 SSC Receive Compare 0 Register

Name: SSC_RC0R

Addresses: 0xFFF9C038 (0), 0xFFFA0038 (1)

Access: Read-write

31	30	29	28	27	26	25	24
–	–	–	–	–	–	–	–

23	22	21	20	19	18	17	16
–	–	–	–	–	–	–	–

15	14	13	12	11	10	9	8
CP0							

7	6	5	4	3	2	1	0
CP0							

- **CP0: Receive Compare Data 0**

34.9.12 SSC Receive Compare 1 Register

Name: SSC_RC1R

Addresses: 0xFFF9C03C (0), 0xFFFA003C (1)

Access: Read-write

31	30	29	28	27	26	25	24
–	–	–	–	–	–	–	–

23	22	21	20	19	18	17	16
–	–	–	–	–	–	–	–

15	14	13	12	11	10	9	8
CP1							

7	6	5	4	3	2	1	0
CP1							

- **CP1: Receive Compare Data 1**

34.9.13 SSC Status Register

Name: SSC_SR

Addresses: 0xFFF9C040 (0), 0xFFFA0040 (1)

Access: Read-only

31	30	29	28	27	26	25	24
–	–	–	–	–	–	–	–

23	22	21	20	19	18	17	16
–	–	–	–	–	–	RXEN	TXEN

15	14	13	12	11	10	9	8
–	–	–	–	RXSYN	TXSYN	CP1	CP0

7	6	5	4	3	2	1	0
RXBUFF	ENDRX	OVRUN	RXRDY	TXBUFE	ENDTX	TXEMPTY	TXRDY

- **TXRDY: Transmit Ready**

0 = Data has been loaded in SSC_THR and is waiting to be loaded in the Transmit Shift Register (TSR).

1 = SSC_THR is empty.

- **TXEMPTY: Transmit Empty**

0 = Data remains in SSC_THR or is currently transmitted from TSR.

1 = Last data written in SSC_THR has been loaded in TSR and last data loaded in TSR has been transmitted.

- **ENDTX: End of Transmission**

0 = The register SSC_TCR has not reached 0 since the last write in SSC_TCR or SSC_TNCR.

1 = The register SSC_TCR has reached 0 since the last write in SSC_TCR or SSC_TNCR.

- **TXBUFE: Transmit Buffer Empty**

0 = SSC_TCR or SSC_TNCR have a value other than 0.

1 = Both SSC_TCR and SSC_TNCR have a value of 0.

- **RXRDY: Receive Ready**

0 = SSC_RHR is empty.

1 = Data has been received and loaded in SSC_RHR.

- **OVRUN: Receive Overrun**

0 = No data has been loaded in SSC_RHR while previous data has not been read since the last read of the Status Register.

1 = Data has been loaded in SSC_RHR while previous data has not yet been read since the last read of the Status Register.

- **ENDRX: End of Reception**

0 = Data is written on the Receive Counter Register or Receive Next Counter Register.

1 = End of PDCDMAC transfer when Receive Counter Register has arrived at zero.

- **RXBUFF: Receive Buffer Full**

0 = SSC_RCR or SSC_RNCR have a value other than 0.

1 = Both SSC_RCR and SSC_RNCR have a value of 0.

- **CP0: Compare 0**

0 = A compare 0 has not occurred since the last read of the Status Register.

1 = A compare 0 has occurred since the last read of the Status Register.

- **CP1: Compare 1**

0 = A compare 1 has not occurred since the last read of the Status Register.

1 = A compare 1 has occurred since the last read of the Status Register.

- **TXSYN: Transmit Sync**

0 = A Tx Sync has not occurred since the last read of the Status Register.

1 = A Tx Sync has occurred since the last read of the Status Register.

- **RXSYN: Receive Sync**

0 = An Rx Sync has not occurred since the last read of the Status Register.

1 = An Rx Sync has occurred since the last read of the Status Register.

- **TXEN: Transmit Enable**

0 = Transmit is disabled.

1 = Transmit is enabled.

- **RXEN: Receive Enable**

0 = Receive is disabled.

1 = Receive is enabled.

34.9.14 SSC Interrupt Enable Register

Name: SSC_IER

Addresses: 0xFFF9C044 (0), 0xFFFA0044 (1)

Access: Write-only

31	30	29	28	27	26	25	24
–	–	–	–	–	–	–	–

23	22	21	20	19	18	17	16
–	–	–	–	–	–	–	–

15	14	13	12	11	10	9	8
–	–	–	–	RXSYN	TXSYN	CP1	CP0

7	6	5	4	3	2	1	0
RXBUFF	ENDRX	OVRUN	RXRDY	TXBUFE	ENDTX	TXEMPTY	TXRDY

- **TXRDY: Transmit Ready Interrupt Enable**

0 = 0 = No effect.

1 = Enables the Transmit Ready Interrupt.

- **TXEMPTY: Transmit Empty Interrupt Enable**

0 = No effect.

1 = Enables the Transmit Empty Interrupt.

- **ENDTX: End of Transmission Interrupt Enable**

0 = No effect.

1 = Enables the End of Transmission Interrupt.

- **TXBUFE: Transmit Buffer Empty Interrupt Enable**

0 = No effect.

1 = Enables the Transmit Buffer Empty Interrupt

- **RXRDY: Receive Ready Interrupt Enable**

0 = No effect.

1 = Enables the Receive Ready Interrupt.

- **OVRUN: Receive Overrun Interrupt Enable**

0 = No effect.

1 = Enables the Receive Overrun Interrupt.

- **ENDRX: End of Reception Interrupt Enable**

0 = No effect.

1 = Enables the End of Reception Interrupt.

- **RXBUFF: Receive Buffer Full Interrupt Enable**

0 = No effect.

1 = Enables the Receive Buffer Full Interrupt.

- **CP0: Compare 0 Interrupt Enable**

0 = No effect.

1 = Enables the Compare 0 Interrupt.

- **CP1: Compare 1 Interrupt Enable**

0 = No effect.

1 = Enables the Compare 1 Interrupt.

- **TXSYN: Tx Sync Interrupt Enable**

0 = No effect.

1 = Enables the Tx Sync Interrupt.

- **RXSYN: Rx Sync Interrupt Enable**

0 = No effect.

1 = Enables the Rx Sync Interrupt.

34.9.15 SSC Interrupt Disable Register

Name: SSC_IDR

Addresses: 0xFFF9C048 (0), 0xFFFA0048 (1)

Access: Write-only

31	30	29	28	27	26	25	24
–	–	–	–	–	–	–	–

23	22	21	20	19	18	17	16
–	–	–	–	–	–	–	–

15	14	13	12	11	10	9	8
–	–	–	–	RXSYN	TXSYN	CP1	CP0

7	6	5	4	3	2	1	0
RXBUFF	ENDRX	OVRUN	RXRDY	TXBUFE	ENDTX	TXEMPTY	TXRDY

- **TXRDY: Transmit Ready Interrupt Disable**

0 = No effect.

1 = Disables the Transmit Ready Interrupt.

- **TXEMPTY: Transmit Empty Interrupt Disable**

0 = No effect.

1 = Disables the Transmit Empty Interrupt.

- **ENDTX: End of Transmission Interrupt Disable**

0 = No effect.

1 = Disables the End of Transmission Interrupt.

- **TXBUFE: Transmit Buffer Empty Interrupt Disable**

0 = No effect.

1 = Disables the Transmit Buffer Empty Interrupt.

- **RXRDY: Receive Ready Interrupt Disable**

0 = No effect.

1 = Disables the Receive Ready Interrupt.

- **OVRUN: Receive Overrun Interrupt Disable**

0 = No effect.

1 = Disables the Receive Overrun Interrupt.

- **ENDRX: End of Reception Interrupt Disable**

0 = No effect.

1 = Disables the End of Reception Interrupt.

- **RXBUFF: Receive Buffer Full Interrupt Disable**

0 = No effect.

1 = Disables the Receive Buffer Full Interrupt.

- **CP0: Compare 0 Interrupt Disable**

0 = No effect.

1 = Disables the Compare 0 Interrupt.

- **CP1: Compare 1 Interrupt Disable**

0 = No effect.

1 = Disables the Compare 1 Interrupt.

- **TXSYN: Tx Sync Interrupt Enable**

0 = No effect.

1 = Disables the Tx Sync Interrupt.

- **RXSYN: Rx Sync Interrupt Enable**

0 = No effect.

1 = Disables the Rx Sync Interrupt.

34.9.16 SSC Interrupt Mask Register

Name: SSC_IMR

Addresses: 0xFFF9C04C (0), 0xFFFA004C (1)

Access: Read-only

31	30	29	28	27	26	25	24
–	–	–	–	–	–	–	–

23	22	21	20	19	18	17	16
–	–	–	–	–	–	–	–

15	14	13	12	11	10	9	8
–	–	–	–	RXSYN	TXSYN	CP1	CP0

7	6	5	4	3	2	1	0
RXBUFF	ENDRX	OVRUN	RXRDY	TXBUFE	ENDTX	TXEMPTY	TXRDY

- **TXRDY: Transmit Ready Interrupt Mask**

0 = The Transmit Ready Interrupt is disabled.

1 = The Transmit Ready Interrupt is enabled.

- **TXEMPTY: Transmit Empty Interrupt Mask**

0 = The Transmit Empty Interrupt is disabled.

1 = The Transmit Empty Interrupt is enabled.

- **ENDTX: End of Transmission Interrupt Mask**

0 = The End of Transmission Interrupt is disabled.

1 = The End of Transmission Interrupt is enabled.

- **TXBUFE: Transmit Buffer Empty Interrupt Mask**

0 = The Transmit Buffer Empty Interrupt is disabled.

1 = The Transmit Buffer Empty Interrupt is enabled.

- **RXRDY: Receive Ready Interrupt Mask**

0 = The Receive Ready Interrupt is disabled.

1 = The Receive Ready Interrupt is enabled.

- **OVRUN: Receive Overrun Interrupt Mask**

0 = The Receive Overrun Interrupt is disabled.

1 = The Receive Overrun Interrupt is enabled.

- **ENDRX: End of Reception Interrupt Mask**

0 = The End of Reception Interrupt is disabled.

1 = The End of Reception Interrupt is enabled.

- **RXBUFF: Receive Buffer Full Interrupt Mask**

0 = The Receive Buffer Full Interrupt is disabled.

1 = The Receive Buffer Full Interrupt is enabled.

- **CP0: Compare 0 Interrupt Mask**

0 = The Compare 0 Interrupt is disabled.

1 = The Compare 0 Interrupt is enabled.

- **CP1: Compare 1 Interrupt Mask**

0 = The Compare 1 Interrupt is disabled.

1 = The Compare 1 Interrupt is enabled.

- **TXSYN: Tx Sync Interrupt Mask**

0 = The Tx Sync Interrupt is disabled.

1 = The Tx Sync Interrupt is enabled.

- **RXSYN: Rx Sync Interrupt Mask**

0 = The Rx Sync Interrupt is disabled.

1 = The Rx Sync Interrupt is enabled.

35. Ethernet MAC 10/100 (EMAC)

35.1 Description

The EMAC module implements a 10/100 Ethernet MAC compatible with the IEEE 802.3 standard using an address checker, statistics and control registers, receive and transmit blocks, and a DMA interface.

The address checker recognizes four specific 48-bit addresses and contains a 64-bit hash register for matching multicast and unicast addresses. It can recognize the broadcast address of all ones, copy all frames, and act on an external address match signal.

The statistics register block contains registers for counting various types of event associated with transmit and receive operations. These registers, along with the status words stored in the receive buffer list, enable software to generate network management statistics compatible with IEEE 802.3.

35.2 Embedded Characteristics

- Compatibility with IEEE Standard 802.3
- 10 and 100 MBits per second data throughput capability
- Full- and half-duplex operations
- MII or RMII interface to the physical layer
- Register Interface to address, data, status and control registers
- DMA Interface, operating as a master on the Memory Controller
- Interrupt generation to signal receive and transmit completion
- 128-byte transmit and 128-byte receive FIFOs
- Automatic pad and CRC generation on transmitted frames
- Address checking logic to recognize four 48-bit addresses
- Supports promiscuous mode where all valid frames are copied to memory
- Supports physical layer management through MDIO interface
- Supports Wake-on-LAN. The receiver supports Wake-on-LAN by detecting the following events on incoming receive frames:
  - Magic packet
  - ARP request to the device IP address
  - Specific address 1 filter match
  - Multicast hash filter match

35.3 Block Diagram

Figure 35-1. EMAC Block Diagram

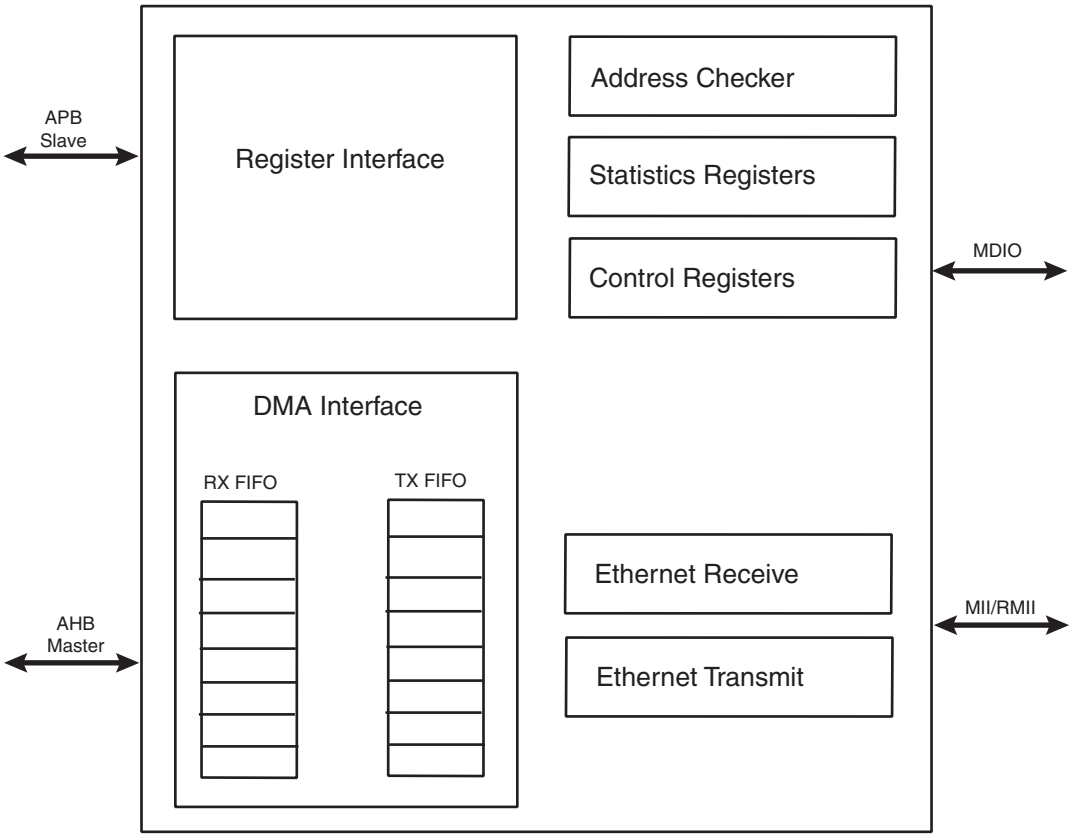

35.4 Functional Description

The MACB has several clock domains:

- System bus clock (AHB and APB): DMA and register blocks
- Transmit clock: transmit block
- Receive clock: receive and address checker block

The system bus clock must run at least as fast as the receive clock and transmit clock (25 MHz at 100 Mbps, and 2.5 MHZ at 10 Mbps).

Figure 35-1 illustrates the different blocks of the EMAC module.

The control registers drive the MDIO interface, setup up DMA activity, start frame transmission and select modes of operation such as full- or half-duplex.

The receive block checks for valid preamble, FCS, alignment and length, and presents received frames to the address checking block and DMA interface.

The transmit block takes data from the DMA interface, adds preamble and, if necessary, pad and FCS, and transmits data according to the CSMA/CD (carrier sense multiple access with collision detect) protocol. The start of transmission is deferred if CRS (carrier sense) is active.

If COL (collision) becomes active during transmission, a jam sequence is asserted and the transmission is retried after a random back off. CRS and COL have no effect in full duplex mode.

The DMA block connects to external memory through its AHB bus interface. It contains receive and transmit FIFOs for buffering frame data. It loads the transmit FIFO and empties the receive FIFO using AHB bus master operations. Receive data is not sent to memory until the address checking logic has determined that the frame should be copied. Receive or transmit frames are stored in one or more buffers. Receive buffers have a fixed length of 128 bytes. Transmit buffers range in length between 0 and 2047 bytes, and up to 128 buffers are permitted per frame. The DMA block manages the transmit and receive framebuffer queues. These queues can hold multiple frames.

35.4.1 Clock

Synchronization module in the EMAC requires that the bus clock (hclk) runs at the speed of the macb_tx/rx_clk at least, which is 25 MHz at 100 Mbps, and 2.5 MHz at 10 Mbps.

35.4.2 Memory Interface

Frame data is transferred to and from the EMAC through the DMA interface. All transfers are 32-bit words and may be single accesses or bursts of 2, 3 or 4 words. Burst accesses do not cross sixteen-byte boundaries. Bursts of 4 words are the default data transfer; single accesses or bursts of less than four words may be used to transfer data at the beginning or the end of a buffer.

The DMA controller performs six types of operation on the bus. In order of priority, these are:

1. Receive buffer manager write
2. Receive buffer manager read
3. Transmit data DMA read
4. Receive data DMA write
5. Transmit buffer manager read
6. Transmit buffer manager write

35.4.2.1 FIFO

The FIFO depths are 128 bytes for receive and 128 bytes for transmit and are a function of the system clock speed, memory latency and network speed.

Data is typically transferred into and out of the FIFOs in bursts of four words. For receive, a bus request is asserted when the FIFO contains four words and has space for 28 more. For transmit, a bus request is generated when there is space for four words, or when there is space for 27 words if the next transfer is to be only one or two words.

Thus the bus latency must be less than the time it takes to load the FIFO and transmit or receive three words (112 bytes) of data.

At 100 Mbit/s, it takes 8960 ns to transmit or receive 112 bytes of data. In addition, six master clock cycles should be allowed for data to be loaded from the bus and to propagate through the FIFOs. For a 133 MHz master clock this takes 45 ns, making the bus latency requirement 8915 ns.

35.4.2.2 Receive Buffers

Received frames, including CRC/FCS optionally, are written to receive buffers stored in memory. Each receive buffer is 128 bytes long. The start location for each receive buffer is stored in memory in a list of receive buffer descriptors at a location pointed to by the receive buffer queue pointer register. The receive buffer start location is a word address. For the first buffer of a frame, the start location can be offset by up to three bytes depending on the value written to bits 14 and 15 of the network configuration register. If the start location of the buffer is offset the available length of the first buffer of a frame is reduced by the corresponding number of bytes.

Each list entry consists of two words, the first being the address of the receive buffer and the second being the receive status. If the length of a receive frame exceeds the buffer length, the status word for the used buffer is written with zeroes except for the “start of frame” bit and the offset bits, if appropriate. Bit zero of the address field is written to one to show the buffer has been used. The receive buffer manager then reads the location of the next receive buffer and fills that with receive frame data. The final buffer descriptor status word contains the complete frame status. Refer to Table 35-1 for details of the receive buffer descriptor list.

Table 35-1. Receive Buffer Descriptor Entry

Bit	Function
Word 0	
31:2	Address of beginning of buffer
1	Wrap - marks last descriptor in receive buffer descriptor list.
0	Ownership - needs to be zero for the EMAC to write data to the receive buffer. The EMAC sets this to one once it has successfully written a frame to memory. Software has to clear this bit before the buffer can be used again.
Word 1	
31	Global all ones broadcast address detected
30	Multicast hash match
29	Unicast hash match
28	External address match
27	Reserved for future use
26	Specific address register 1 match
25	Specific address register 2 match
24	Specific address register 3 match
23	Specific address register 4 match
22	Type ID match
21	VLAN tag detected (i.e., type id of 0x8100)
20	Priority tag detected (i.e., type id of 0x8100 and null VLAN identifier)

Table 35-1. Receive Buffer Descriptor Entry (Continued)

Bit	Function
19:17	VLAN priority (only valid if bit 21 is set)
16	Concatenation format indicator (CFI) bit (only valid if bit 21 is set)
15	End of frame - when set the buffer contains the end of a frame. If end of frame is not set, then the only other valid status are bits 12, 13 and 14.
14	Start of frame - when set the buffer contains the start of a frame. If both bits 15 and 14 are set, then the buffer contains a whole frame.
13:12	Receive buffer offset - indicates the number of bytes by which the data in the first buffer is offset from the word address. Updated with the current values of the network configuration register. If jumbo frame mode is enabled through bit 3 of the network configuration register, then bits 13:12 of the receive buffer descriptor entry are used to indicate bits 13:12 of the frame length.
11:0	Length of frame including FCS (if selected). Bits 13:12 are also used if jumbo frame mode is selected.

To receive frames, the buffer descriptors must be initialized by writing an appropriate address to bits 31 to 2 in the first word of each list entry. Bit zero must be written with zero. Bit one is the wrap bit and indicates the last entry in the list.

The start location of the receive buffer descriptor list must be written to the receive buffer queue pointer register before setting the receive enable bit in the network control register to enable receive. As soon as the receive block starts writing received frame data to the receive FIFO, the receive buffer manager reads the first receive buffer location pointed to by the receive buffer queue pointer register.

If the filter block then indicates that the frame should be copied to memory, the receive data DMA operation starts writing data into the receive buffer. If an error occurs, the buffer is recovered. If the current buffer pointer has its wrap bit set or is the 1024th descriptor, the next receive buffer location is read from the beginning of the receive descriptor list. Otherwise, the next receive buffer location is read from the next word in memory.

There is an 11-bit counter to count out the 2048 word locations of a maximum length, receive buffer descriptor list. This is added with the value originally written to the receive buffer queue pointer register to produce a pointer into the list. A read of the receive buffer queue pointer register returns the pointer value, which is the queue entry currently being accessed. The counter is reset after receive status is written to a descriptor that has its wrap bit set or rolls over to zero after 1024 descriptors have been accessed. The value written to the receive buffer pointer register may be any word-aligned address, provided that there are at least 2048 word locations available between the pointer and the top of the memory.

Section 3.6 of the AMBA 2.0 specification states that bursts should not cross 1K boundaries. As receive buffer manager writes are bursts of two words, to ensure that this does not occur, it is best to write the pointer register with the least three significant bits set to zero. As receive buffers are used, the receive buffer manager sets bit zero of the first word of the descriptor to indicate *used*. If a receive error is detected the receive buffer currently being written is recovered. Previous buffers are not recovered. Software should search through the *used* bits in the buffer descriptors to find out how many frames have been received. It should be checking the start-of-frame and end-of-frame bits, and not rely on the value returned by the receive buffer queue pointer register which changes continuously as more buffers are used.

For CRC errored frames, excessive length frames or length field mismatched frames, all of which are counted in the statistics registers, it is possible that a frame fragment might be stored in a sequence of receive buffers. Software can detect this by looking for start of frame bit set in a buffer following a buffer with no end of frame bit set.

For a properly working Ethernet system, there should be no excessively long frames or frames greater than 128 bytes with CRC/FCS errors. Collision fragments are less than 128 bytes long. Therefore, it is a rare occurrence to find a frame fragment in a receive buffer.

If bit zero is set when the receive buffer manager reads the location of the receive buffer, then the buffer has already been used and cannot be used again until software has processed the frame and cleared bit zero. In this case, the DMA block sets the buffer not available bit in the receive status register and triggers an interrupt.

If bit zero is set when the receive buffer manager reads the location of the receive buffer and a frame is being received, the frame is discarded and the receive resource error statistics register is incremented.

A receive overrun condition occurs when bus was not granted in time or because HRESP was not OK (bus error). In a receive overrun condition, the receive overrun interrupt is asserted and the buffer currently being written is recovered. The next frame received with an address that is recognized reuses the buffer.

If bit 17 of the network configuration register is set, the FCS of received frames shall not be copied to memory. The frame length indicated in the receive status field shall be reduced by four bytes in this case.

35.4.2.3 *Transmit Buffer*

Frames to be transmitted are stored in one or more transmit buffers. Transmit buffers can be between 0 and 2047 bytes long, so it is possible to transmit frames longer than the maximum length specified in IEEE Standard 802.3. Zero length buffers are allowed. The maximum number of buffers permitted for each transmit frame is 128.

The start location for each transmit buffer is stored in memory in a list of transmit buffer descriptors at a location pointed to by the transmit buffer queue pointer register. Each list entry consists of two words, the first being the byte address of the transmit buffer and the second containing the transmit control and status. Frames can be transmitted with or without automatic CRC generation. If CRC is automatically generated, pad is also automatically generated to take frames to a minimum length of 64 bytes. Table 35-2 on page 679 defines an entry in the transmit buffer descriptor list. To transmit frames, the buffer descriptors must be initialized by writing an appropriate byte address to bits 31 to 0 in the first word of each list entry. The second transmit buffer descriptor is initialized with control information that indicates the length of the buffer, whether or not it is to be transmitted with CRC and whether the buffer is the last buffer in the frame.

After transmission, the control bits are written back to the second word of the first buffer along with the “used” bit and other status information. Bit 31 is the “used” bit which must be zero when the control word is read if transmission is to happen. It is written to one when a frame has been transmitted. Bits 27, 28 and 29 indicate various transmit error conditions. Bit 30 is the “wrap” bit which can be set for any buffer within a frame. If no wrap bit is encountered after 1024 descriptors, the queue pointer rolls over to the start in a similar fashion to the receive queue.

The transmit buffer queue pointer register must not be written while transmit is active. If a new value is written to the transmit buffer queue pointer register, the queue pointer resets itself to point to the beginning of the new queue. If transmit is disabled by writing to bit 3 of the network control, the transmit buffer queue pointer register resets to point to the beginning of the transmit queue. Note that disabling receive does not have the same effect on the receive queue pointer.

Once the transmit queue is initialized, transmit is activated by writing to bit 9, the *Transmit Start* bit of the network control register. Transmit is halted when a buffer descriptor with its *used* bit set is read, or if a transmit error occurs, or by writing to the transmit halt bit of the network control register. (Transmission is suspended if a pause frame is received while the pause enable bit is set in the network configuration register.) Rewriting the start bit while transmission is active is allowed.

Transmission control is implemented with a Tx_go variable which is readable in the transmit status register at bit location 3. The Tx_go variable is reset when:

- transmit is disabled
- a buffer descriptor with its ownership bit set is read
- a new value is written to the transmit buffer queue pointer register
- bit 10, tx_halt, of the network control register is written

– there is a transmit error such as too many retries or a transmit underrun.

To set tx_go, write to bit 9, tx_start, of the network control register. Transmit halt does not take effect until any ongoing transmit finishes. If a collision occurs during transmission of a multi-buffer frame, transmission automatically restarts from the first buffer of the frame. If a “used” bit is read midway through transmission of a multi-buffer frame, this is treated as a transmit error. Transmission stops, tx_er is asserted and the FCS is bad.

If transmission stops due to a transmit error, the transmit queue pointer resets to point to the beginning of the transmit queue. Software needs to re-initialize the transmit queue after a transmit error.

If transmission stops due to a “used” bit being read at the start of the frame, the transmission queue pointer is not reset and transmit starts from the same transmit buffer descriptor when the transmit start bit is written

Table 35-2. Transmit Buffer Descriptor Entry

Bit	Function
	Word 0
31:0	**Byte Address of buffer**
	Word 1
31	Used. Needs to be zero for the EMAC to read data from the transmit buffer. The EMAC sets this to one for the first buffer of a frame once it has been successfully transmitted. Software has to clear this bit before the buffer can be used again. Note: This bit is only set for the first buffer in a frame unlike receive where all buffers have the Used bit set once used.
30	Wrap. Marks last descriptor in transmit buffer descriptor list.
29	Retry limit exceeded, transmit error detected
28	Transmit underrun, occurs either when hresp is not OK (bus error) or the transmit data could not be fetched in time or when buffers are exhausted in mid frame.
27	Buffers exhausted in mid frame
26:17	Reserved
16	No CRC. When set, no CRC is appended to the current frame. This bit only needs to be set for the last buffer of a frame.
15	Last buffer. When set, this bit indicates the last buffer in the current frame has been reached.
14:11	Reserved
10:0	Length of buffer

35.4.3 Transmit Block

This block transmits frames in accordance with the Ethernet IEEE 802.3 CSMA/CD protocol. Frame assembly starts by adding preamble and the start frame delimiter. Data is taken from the transmit FIFO a word at a time. Data is transmitted least significant nibble first. If necessary, padding is added to increase the frame length to 60 bytes. CRC is calculated as a 32-bit polynomial. This is inverted and appended to the end of the frame, taking the frame length to a minimum of 64 bytes. If the No CRC bit is set in the second word of the last buffer descriptor of a transmit frame, neither pad nor CRC are appended.

In full-duplex mode, frames are transmitted immediately. Back-to-back frames are transmitted at least 96 bit times apart to guarantee the interframe gap.

In half-duplex mode, the transmitter checks carrier sense. If asserted, it waits for it to de-assert and then starts transmission after the interframe gap of 96 bit times. If the collision signal is asserted during transmission, the transmitter transmits a jam sequence of 32 bits taken from the data register and then retry transmission after the back off time has elapsed.

The back-off time is based on an XOR of the 10 least significant bits of the data coming from the transmit FIFO and a 10-bit pseudo random number generator. The number of bits used depends on the number of collisions seen. After the first collision, 1 bit is used, after the second 2, and so on up to 10. Above 10, all 10 bits are used. An error is indicated and no further attempts are made if 16 attempts cause collisions.

If transmit DMA underruns, bad CRC is automatically appended using the same mechanism as jam insertion and the tx_er signal is asserted. For a properly configured system, this should never happen.

If the back pressure bit is set in the network control register in half duplex mode, the transmit block transmits 64 bits of data, which can consist of 16 nibbles of 1011 or in bit-rate mode 64 1s, whenever it sees an incoming frame to force a collision. This provides a way of implementing flow control in half-duplex mode.

35.4.4 Pause Frame Support

The start of an 802.3 pause frame is as follows:

Table 35-3. Start of an 802.3 Pause Frame

Destination Address	Source Address	Type (Mac Control Frame)	Pause Opcode	Pause Time
0x0180C2000001	6 bytes	0x8808	0x0001	2 bytes

The network configuration register contains a receive pause enable bit (13). If a valid pause frame is received, the pause time register is updated with the frame's pause time, regardless of its current contents and regardless of the state of the configuration register bit 13. An interrupt (12) is triggered when a pause frame is received, assuming it is enabled in the interrupt mask register. If bit 13 is set in the network configuration register and the value of the pause time register is non-zero, no new frame is transmitted until the pause time register has decremented to zero.

The loading of a new pause time, and hence the pausing of transmission, only occurs when the EMAC is configured for full-duplex operation. If the EMAC is configured for half-duplex, there is no transmission pause, but the pause frame received interrupt is still triggered.

A valid pause frame is defined as having a destination address that matches either the address stored in specific address register 1 or matches 0x0180C2000001 and has the MAC control frame type ID of 0x8808 and the pause opcode of 0x0001. Pause frames that have FCS or other errors are treated as invalid and are discarded. Valid pause frames received increment the Pause Frame Received statistic register.

The pause time register decrements every 512 bit times (i.e., 128 `rx_clks` in nibble mode) once transmission has stopped. For test purposes, the register decrements every `rx_clk` cycle once transmission has stopped if bit 12 (retry test) is set in the network configuration register. If the pause enable bit (13) is not set in the network configuration register, then the decrementing occurs regardless of whether transmission has stopped or not.

An interrupt (13) is asserted whenever the pause time register decrements to zero (assuming it is enabled in the interrupt mask register).

35.4.5 Receive Block

The receive block checks for valid preamble, FCS, alignment and length, presents received frames to the DMA block and stores the frames destination address for use by the address checking block. If, during frame reception, the frame is found to be too long or rx_er is asserted, a bad frame indication is sent to the DMA block. The DMA block then ceases sending data to memory. At the end of frame reception, the receive block indicates to the DMA block whether the frame is good or bad. The DMA block recovers the current receive buffer if the frame was bad. The receive block signals the register block to increment the alignment error, the CRC (FCS) error, the short frame, long frame, jabber error, the receive symbol error statistics and the length field mismatch statistics.

The enable bit for jumbo frames in the network configuration register allows the EMAC to receive jumbo frames of up to 10240 bytes in size. This operation does not form part of the IEEE802.3 specification and is disabled by

default. When jumbo frames are enabled, frames received with a frame size greater than 10240 bytes are discarded.

35.4.6 Address Checking Block

The address checking (or filter) block indicates to the DMA block which receive frames should be copied to memory. Whether a frame is copied depends on what is enabled in the network configuration register, the state of the external match pin, the contents of the specific address and hash registers and the frame's destination address. In this implementation of the EMAC, the frame's source address is not checked. Provided that bit 18 of the Network Configuration register is not set, a frame is not copied to memory if the EMAC is transmitting in half duplex mode at the time a destination address is received. If bit 18 of the Network Configuration register is set, frames can be received while transmitting in half-duplex mode.

Ethernet frames are transmitted a byte at a time, least significant bit first. The first six bytes (48 bits) of an Ethernet frame make up the destination address. The first bit of the destination address, the LSB of the first byte of the frame, is the group/individual bit: this is *One* for multicast addresses and *Zero* for unicast. The *All Ones* address is the broadcast address, and a special case of multicast.

The EMAC supports recognition of four specific addresses. Each specific address requires two registers, specific address register bottom and specific address register top. Specific address register bottom stores the first four bytes of the destination address and specific address register top contains the last two bytes. The addresses stored can be specific, group, local or universal.

The destination address of received frames is compared against the data stored in the specific address registers once they have been activated. The addresses are deactivated at reset or when their corresponding specific address register bottom is written. They are activated when specific address register top is written. If a receive frame address matches an active address, the frame is copied to memory.

The following example illustrates the use of the address match registers for a MAC address of 21:43:65:87:A9:CB.

Preamble 55

SFD D5

DA (Octet0 - LSB) 21

DA(Octet 1) 43

DA(Octet 2) 65

DA(Octet 3) 87

DA(Octet 4) A9

DA (Octet5 - MSB) CB

SA (LSB) 00

SA 00

SA 00

SA 00

SA 00

SA (MSB) 43

SA (LSB) 21

The sequence above shows the beginning of an Ethernet frame. Byte order of transmission is from top to bottom as shown. For a successful match to specific address 1, the following address matching registers must be set up:

- Base address + 0x98 0x87654321 (Bottom)
- Base address + 0x9C 0x0000CBA9 (Top)

And for a successful match to the Type ID register, the following should be set up:

- Base address + 0xB8 0x00004321

35.4.7 Broadcast Address

The broadcast address of 0xFFFFFFFFFFFF is recognized if the 'no broadcast' bit in the network configuration register is zero.

35.4.8 Hash Addressing

The hash address register is 64 bits long and takes up two locations in the memory map. The least significant bits are stored in hash register bottom and the most significant bits in hash register top.

The unicast hash enable and the multicast hash enable bits in the network configuration register enable the reception of hash matched frames. The destination address is reduced to a 6-bit index into the 64-bit hash register using the following hash function. The hash function is an *exclusive or* of every sixth bit of the destination address.

hash_index[5] = da[5] ^ da[11] ^ da[17] ^ da[23] ^ da[29] ^ da[35] ^ da[41] ^ da[47]

hash_index[4] = da[4] ^ da[10] ^ da[16] ^ da[22] ^ da[28] ^ da[34] ^ da[40] ^ da[46]

hash_index[3] = da[3] ^ da[09] ^ da[15] ^ da[21] ^ da[27] ^ da[33] ^ da[39] ^ da[45]

hash_index[2] = da[2] ^ da[08] ^ da[14] ^ da[20] ^ da[26] ^ da[32] ^ da[38] ^ da[44]

hash_index[1] = da[1] ^ da[07] ^ da[13] ^ da[19] ^ da[25] ^ da[31] ^ da[37] ^ da[43]

hash_index[0] = da[0] ^ da[06] ^ da[12] ^ da[18] ^ da[24] ^ da[30] ^ da[36] ^ da[42]

`da[0]` represents the least significant bit of the first byte received, that is, the multicast/unicast indicator, and `da[47]` represents the most significant bit of the last byte received.

If the hash index points to a bit that is set in the hash register, then the frame is matched according to whether the frame is multicast or unicast.

A multicast match is signalled if the multicast hash enable bit is set. da[0] is 1 and the hash index points to a bit set in the hash register.

A unicast match is signalled if the unicast hash enable bit is set. da[0] is 0 and the hash index points to a bit set in the hash register.

To receive all multicast frames, the hash register should be set with all ones and the multicast hash enable bit should be set in the network configuration register.

35.4.9 Copy All Frames (or Promiscuous Mode)

If the copy all frames bit is set in the network configuration register, then all non-errored frames are copied to memory. For example, frames that are too long, too short, or have FCS errors or rx_er asserted during reception are discarded and all others are received. Frames with FCS errors are copied to memory if bit 19 in the network configuration register is set.

35.4.10 Type ID Checking

The contents of the type_id register are compared against the length/type ID of received frames (i.e., bytes 13 and 14). Bit 22 in the receive buffer descriptor status is set if there is a match. The reset state of this register is zero which is unlikely to match the length/type ID of any valid Ethernet frame.

Note: A type ID match does not affect whether a frame is copied to memory.

35.4.11 VLAN Support

An Ethernet encoded 802.1Q VLAN tag looks like this:

Table 35-4. 802.1Q VLAN Tag

TPID (Tag Protocol Identifier) 16 bits	TCI (Tag Control Information) 16 bits
0x8100	First 3 bits priority, then CFI bit, last 12 bits VID

The VLAN tag is inserted at the 13th byte of the frame, adding an extra four bytes to the frame. If the VID (VLAN identifier) is null (0x000), this indicates a priority-tagged frame. The MAC can support frame lengths up to 1536 bytes, 18 bytes more than the original Ethernet maximum frame length of 1518 bytes. This is achieved by setting bit 8 in the network configuration register.

The following bits in the receive buffer descriptor status word give information about VLAN tagged frames:

- Bit 21 set if receive frame is VLAN tagged (i.e. type id of 0x8100)
- Bit 20 set if receive frame is priority tagged (i.e. type id of 0x8100 and null VID). (If bit 20 is set bit 21 is set also.)
- Bit 19, 18 and 17 set to priority if bit 21 is set
- Bit 16 set to CFI if bit 21 is set

35.4.12 Wake-on-LAN Support

The receive block supports Wake-on-LAN by detecting the following events on incoming receive frames:

- Magic packet
- ARP request to the device IP address
- Specific address 1 filter match
- Multicast hash filter match

If one of these events occurs Wake-on-LAN detection is indicated by asserting the `wol` output pin for 64 `rx_clk` cycles. These events can be individually enabled through bits[19:16] of the Wake-on-LAN register. Also, for Wake-on-LAN detection to occur, receive enable must be set in the network control register, however a receive buffer does not have to be available. `wol` assertion due to ARP request, specific address 1 or multicast filter events occurs even if the frame is errored. For magic packet events, the frame must be correctly formed and error free.

A magic packet event is detected if all of the following are true:

- magic packet events are enabled through bit 16 of the Wake-on-LAN register
- the frame's destination address matches specific address 1
- the frame is correctly formed with no errors
- the frame contains at least 6 bytes of 0xFF for synchronization
- there are 16 repetitions of the contents of specific address 1 register immediately following the synchronization

An ARP request event is detected if all of the following are true:

- ARP request events are enabled through bit 17 of the Wake-on-LAN register
- broadcasts are allowed by bit 5 in the network configuration register
- the frame has a broadcast destination address (bytes 1 to 6)
- the frame has a type ID field of 0x0806 (bytes 13 and 14)
- the frame has an ARP operation field of 0x0001 (bytes 21 and 22)
- the least significant 16 bits of the frame's ARP target protocol address (bytes 41 and 42) match the value programmed in bits[15:0] of the Wake-on-LAN register

The decoding of the ARP fields adjusts automatically if a VLAN tag is detected within the frame. The reserved value of 0x0000 for the Wake-on-LAN target address value does not cause an ARP request event, even if matched by the frame.

A specific address 1 filter match event occurs if all of the following are true:

- specific address 1 events are enabled through bit 18 of the Wake-on-LAN register
- the frame's destination address matches the value programmed in the specific address 1 registers

A multicast filter match event occurs if all of the following are true:

- multicast hash events are enabled through bit 19 of the Wake-on-LAN register
- multicast hash filtering is enabled through bit 6 of the network configuration register
- the frame's destination address matches against the multicast hash filter
- the frame's destination address is not a broadcast

35.4.13 PHY Maintenance

The register EMAC_MAN enables the EMAC to communicate with a PHY by means of the MDIO interface. It is used during auto-negotiation to ensure that the EMAC and the PHY are configured for the same speed and duplex configuration.

The PHY maintenance register is implemented as a shift register. Writing to the register starts a shift operation which is signalled as complete when bit two is set in the network status register (about 2000 MCK cycles later when bit ten is set to zero, and bit eleven is set to one in the network configuration register). An interrupt is generated as this bit is set. During this time, the MSB of the register is output on the MDIO pin and the LSB updated from the MDIO pin with each MDC cycle. This causes transmission of a PHY management frame on MDIO.

Reading during the shift operation returns the current contents of the shift register. At the end of management operation, the bits have shifted back to their original locations. For a read operation, the data bits are updated with data read from the PHY. It is important to write the correct values to the register to ensure a valid PHY management frame is produced.

The MDIO interface can read IEEE 802.3 clause 45 PHYs as well as clause 22 PHYs. To read clause 45 PHYs, bits[31:28] should be written as 0x0011. For a description of MDC generation, see the network configuration register in the "Network Control Register" on page 691.

35.4.14 Media Independent Interface

The Ethernet MAC is capable of interfacing to both RMII and MII Interfaces. The RMII bit in the EMAC_USRIO register controls the interface that is selected. When this bit is set, the RMII interface is selected, else the MII interface is selected.

The MII and RMII interface are capable of both 10Mb/s and 100Mb/s data rates as described in the IEEE 802.3u standard. The signals used by the MII and RMII interfaces are described in Table 35-5.

Table 35-5. Pin Configuration

Pin Name	MII	RMII
ETXCK_EREFCK	ETXCK: Transmit Clock	EREFCK: Reference Clock
ECRS	ECRS: Carrier Sense	
ECOL	ECOL: Collision Detect	
ERXDV	ERXDV: Data Valid	ECRSDV: Carrier Sense/Data Valid
ERX0 - ERX3	ERX0 - ERX3: 4-bit Receive Data	ERX0 - ERX1: 2-bit Receive Data
ERXER	ERXER: Receive Error	ERXER: Receive Error

Table 35-5. Pin Configuration

ERXCK	ERXCK: Receive Clock	
ETXEN	ETXEN: Transmit Enable	ETXEN: Transmit Enable
ETX0-ETX3	ETX0 - ETX3: 4-bit Transmit Data	ETX0 - ETX1: 2-bit Transmit Data
ETXER	ETXER: Transmit Error	

The intent of the RMII is to provide a reduced pin count alternative to the IEEE 802.3u MII. It uses 2 bits for transmit (ETX0 and ETX1) and two bits for receive (ERX0 and ERX1). There is a Transmit Enable (ETXEN), a Receive Error (ERXER), a Carrier Sense (ECRS_DV), and a 50 MHz Reference Clock (ETXCK_EREFCK) for 100Mb/s data rate.

35.4.14.1 RMII Transmit and Receive Operation

The same signals are used internally for both the RMII and the MII operations. The RMII maps these signals in a more pin-efficient manner. The transmit and receive bits are converted from a 4-bit parallel format to a 2-bit parallel scheme that is clocked at twice the rate. The carrier sense and data valid signals are combined into the ECRSDV signal. This signal contains information on carrier sense, FIFO status, and validity of the data. Transmit error bit (ETXER) and collision detect (ECOL) are not used in RMII mode.

35.5 Programming Interface

35.5.1 Initialization

35.5.1.1 Configuration

Initialization of the EMAC configuration (e.g., loop-back mode, frequency ratios) must be done while the transmit and receive circuits are disabled. See the description of the network control register and network configuration register earlier in this document.

To change loop-back mode, the following sequence of operations must be followed:

1. Write to network control register to disable transmit and receive circuits.
2. Write to network control register to change loop-back mode.
3. Write to network control register to re-enable transmit or receive circuits.

Note: These writes to network control register cannot be combined in any way.

35.5.1.2 Receive Buffer List

Receive data is written to areas of data (i.e., buffers) in system memory. These buffers are listed in another data structure that also resides in main memory. This data structure (receive buffer queue) is a sequence of descriptor entries as defined in "Receive Buffer Descriptor Entry" on page 676. It points to this data structure.

Figure 35-2. Receive Buffer List

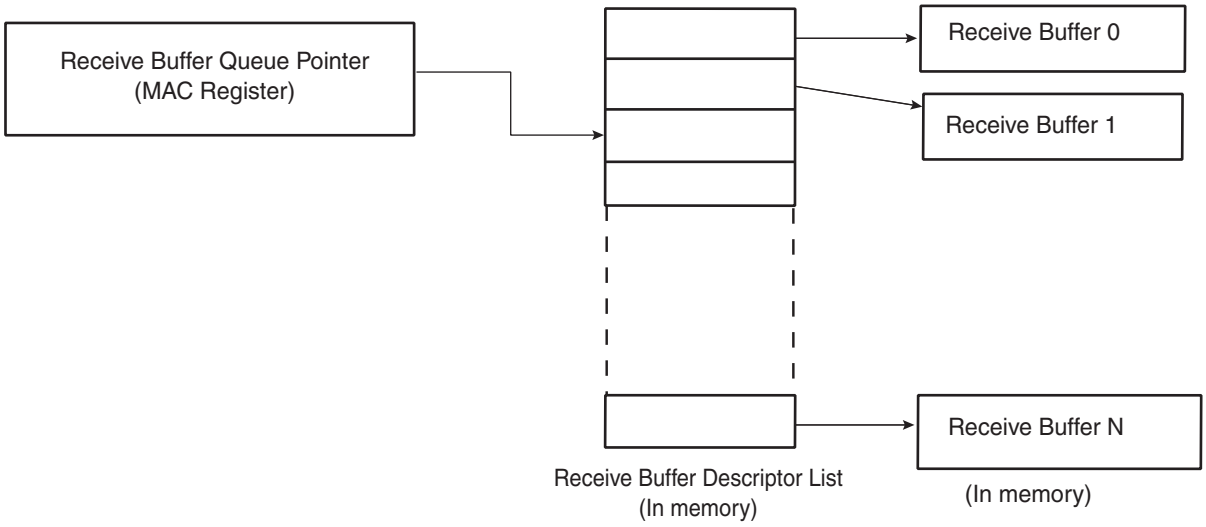

To create the list of buffers:

1. Allocate a number (*n*) of buffers of 128 bytes in system memory.
2. Allocate an area 2*n* words for the receive buffer descriptor entry in system memory and create *n* entries in this list. Mark all entries in this list as owned by EMAC, i.e., bit 0 of word 0 set to 0.
3. If less than 1024 buffers are defined, the last descriptor must be marked with the wrap bit (bit 1 in word 0 set to 1).
4. Write address of receive buffer descriptor entry to EMAC register `receive_buffer` queue pointer.
5. The receive circuits can then be enabled by writing to the address recognition registers and then to the network control register.

35.5.1.3 Transmit Buffer List

Transmit data is read from areas of data (the buffers) in system memory These buffers are listed in another data structure that also resides in main memory. This data structure (Transmit Buffer Queue) is a sequence of descriptor entries (as defined in Table 35-2 on page 679) that points to this data structure.

To create this list of buffers:

1. Allocate a number (*n*) of buffers of between 1 and 2047 bytes of data to be transmitted in system memory. Up to 128 buffers per frame are allowed.
2. Allocate an area 2*n* words for the transmit buffer descriptor entry in system memory and create N entries in this list. Mark all entries in this list as owned by EMAC, i.e. bit 31 of word 1 set to 0.
3. If fewer than 1024 buffers are defined, the last descriptor must be marked with the wrap bit — bit 30 in word 1 set to 1.
4. Write address of transmit buffer descriptor entry to EMAC register transmit_buffer queue pointer.
5. The transmit circuits can then be enabled by writing to the network control register.

35.5.1.4 Address Matching

The EMAC register-pair hash address and the four specific address register-pairs must be written with the required values. Each register-pair comprises a bottom register and top register, with the bottom register being written first. The address matching is disabled for a particular register-pair after the bottom-register has been written and re-enabled when the top register is written. See “Address Checking Block” on page 681. for details of address matching. Each register-pair may be written at any time, regardless of whether the receive circuits are enabled or disabled.

35.5.1.5 Interrupts

There are 15 interrupt conditions that are detected within the EMAC. These are ORed to make a single interrupt. Depending on the overall system design, this may be passed through a further level of interrupt collection (interrupt controller). On receipt of the interrupt signal, the CPU enters the interrupt handler (Refer to the AIC programmer datasheet). To ascertain which interrupt has been generated, read the interrupt status register. Note that this register clears itself when read. At reset, all interrupts are disabled. To enable an interrupt, write to interrupt enable register with the pertinent interrupt bit set to 1. To disable an interrupt, write to interrupt disable register with the pertinent interrupt bit set to 1. To check whether an interrupt is enabled or disabled, read interrupt mask register: if the bit is set to 1, the interrupt is disabled.

35.5.1.6 Transmitting Frames

To set up a frame for transmission:

1. Enable transmit in the network control register.
2. Allocate an area of system memory for transmit data. This does not have to be contiguous, varying byte lengths can be used as long as they conclude on byte borders.
3. Set-up the transmit buffer list.
4. Set the network control register to enable transmission and enable interrupts.
5. Write data for transmission into these buffers.
6. Write the address to transmit buffer descriptor queue pointer.
7. Write control and length to word one of the transmit buffer descriptor entry.
8. Write to the transmit start bit in the network control register.

35.5.1.7 Receiving Frames

When a frame is received and the receive circuits are enabled, the EMAC checks the address and, in the following cases, the frame is written to system memory:

- if it matches one of the four specific address registers.

- if it matches the hash address function.
- if it is a broadcast address (0xFFFFFFFFFFFF) and broadcasts are allowed.
- if the EMAC is configured to copy all frames.

The register receive buffer queue pointer points to the next entry (see Table 35-1 on page 676) and the EMAC uses this as the address in system memory to write the frame to. Once the frame has been completely and successfully received and written to system memory, the EMAC then updates the receive buffer descriptor entry with the reason for the address match and marks the area as being owned by software. Once this is complete an interrupt receive complete is set. Software is then responsible for handling the data in the buffer and then releasing the buffer by writing the ownership bit back to 0.

If the EMAC is unable to write the data at a rate to match the incoming frame, then an interrupt receive overrun is set. If there is no receive buffer available, i.e., the next buffer is still owned by software, the interrupt receive buffer not available is set. If the frame is not successfully received, a statistic register is incremented and the frame is discarded without informing software.

35.6 Ethernet MAC 10/100 (EMAC) User Interface

Table 35-6. Register Mapping

Offset	Register	Name	Access	Reset
0x00	Network Control Register	EMAC_NCR	Read-write	0
0x04	Network Configuration Register	EMAC_NCFG	Read-write	0x800
0x08	Network Status Register	EMAC_NSR	Read-only	-
0x0C	Reserved			
0x10	Reserved			
0x14	Transmit Status Register	EMAC_TSR	Read-write	0x0000_0000
0x18	Receive Buffer Queue Pointer Register	EMAC_RBQP	Read-write	0x0000_0000
0x1C	Transmit Buffer Queue Pointer Register	EMAC_TBQP	Read-write	0x0000_0000
0x20	Receive Status Register	EMAC_RSR	Read-write	0x0000_0000
0x24	Interrupt Status Register	EMAC_ISR	Read-write	0x0000_0000
0x28	Interrupt Enable Register	EMAC_IER	Write-only	-
0x2C	Interrupt Disable Register	EMAC_IDR	Write-only	-
0x30	Interrupt Mask Register	EMAC_IMR	Read-only	0x0000_7FFF
0x34	Phy Maintenance Register	EMAC_MAN	Read-write	0x0000_0000
0x38	Pause Time Register	EMAC_PTR	Read-write	0x0000_0000
0x3C	Pause Frames Received Register	EMAC_PFR	Read-write	0x0000_0000
0x40	Frames Transmitted Ok Register	EMAC_FTO	Read-write	0x0000_0000
0x44	Single Collision Frames Register	EMAC_SCF	Read-write	0x0000_0000
0x48	Multiple Collision Frames Register	EMAC_MCF	Read-write	0x0000_0000
0x4C	Frames Received Ok Register	EMAC_FRO	Read-write	0x0000_0000
0x50	Frame Check Sequence Errors Register	EMAC_FCSE	Read-write	0x0000_0000
0x54	Alignment Errors Register	EMAC_ALE	Read-write	0x0000_0000
0x58	Deferred Transmission Frames Register	EMAC_DTF	Read-write	0x0000_0000
0x5C	Late Collisions Register	EMAC_LCOL	Read-write	0x0000_0000
0x60	Excessive Collisions Register	EMAC_ECOL	Read-write	0x0000_0000
0x64	Transmit Underrun Errors Register	EMAC_TUND	Read-write	0x0000_0000
0x68	Carrier Sense Errors Register	EMAC_CSE	Read-write	0x0000_0000
0x6C	Receive Resource Errors Register	EMAC_RRE	Read-write	0x0000_0000
0x70	Receive Overrun Errors Register	EMAC_ROV	Read-write	0x0000_0000
0x74	Receive Symbol Errors Register	EMAC_RSE	Read-write	0x0000_0000
0x78	Excessive Length Errors Register	EMAC_ELE	Read-write	0x0000_0000
0x7C	Receive Jabbers Register	EMAC_RJA	Read-write	0x0000_0000
0x80	Undersize Frames Register	EMAC_USF	Read-write	0x0000_0000
0x84	SQE Test Errors Register	EMAC_STE	Read-write	0x0000_0000
0x88	Received Length Field Mismatch Register	EMAC_RLE	Read-write	0x0000_0000

Table 35-6. Register Mapping (Continued)

Offset	Register	Name	Access	Reset
0x90	Hash Register Bottom [31:0] Register	EMAC_HRB	Read-write	0x0000_0000
0x94	Hash Register Top [63:32] Register	EMAC_HRT	Read-write	0x0000_0000
0x98	Specific Address 1 Bottom Register	EMAC_SA1B	Read-write	0x0000_0000
0x9C	Specific Address 1 Top Register	EMAC_SA1T	Read-write	0x0000_0000
0xA0	Specific Address 2 Bottom Register	EMAC_SA2B	Read-write	0x0000_0000
0xA4	Specific Address 2 Top Register	EMAC_SA2T	Read-write	0x0000_0000
0xA8	Specific Address 3 Bottom Register	EMAC_SA3B	Read-write	0x0000_0000
0xAC	Specific Address 3 Top Register	EMAC_SA3T	Read-write	0x0000_0000
0xB0	Specific Address 4 Bottom Register	EMAC_SA4B	Read-write	0x0000_0000
0xB4	Specific Address 4 Top Register	EMAC_SA4T	Read-write	0x0000_0000
0xB8	Type ID Checking Register	EMAC_TID	Read-write	0x0000_0000
0xC0	User Input/Output Register	EMAC_USRIO	Read-write	0x0000_0000
0xC4	Wake on LAN Register	EMAC_WOL	Read-write	0x0000_0000
0xC8 - 0xFC	Reserved	–	–	–

35.6.1 Network Control Register

Name: EMAC_NCR

Address: 0xFFFBC000

Access: Read-write

31	30	29	28	27	26	25	24
–	–	–	–	–	–	–	–

23	22	21	20	19	18	17	16
–	–	–	–	–	–	–	–

15	14	13	12	11	10	9	8
–	–	–	–	–	THALT	TSTART	BP

7	6	5	4	3	2	1	0
WESTAT	INCSTAT	CLRSTAT	MPE	TE	RE	LLB	LB

- **LB: LoopBack**

Asserts the loopback signal to the PHY.

- **LLB: Loopback local**

Connects `txd` to `rxd`, `tx_en` to `rx_dv`, forces full duplex and drives `rx_clk` and `tx_clk` with `pclk` divided by 4. `rx_clk` and `tx_clk` may glitch as the EMAC is switched into and out of internal loop back. It is important that receive and transmit circuits have already been disabled when making the switch into and out of internal loop back.

- **RE: Receive enable**

When set, enables the EMAC to receive data. When reset, frame reception stops immediately and the receive FIFO is cleared. The receive queue pointer register is unaffected.

- **TE: Transmit enable**

When set, enables the Ethernet transmitter to send data. When reset transmission, stops immediately, the transmit FIFO and control registers are cleared and the transmit queue pointer register resets to point to the start of the transmit descriptor list.

- **MPE: Management port enable**

Set to one to enable the management port. When zero, forces MDIO to high impedance state and MDC low.

- **CLRSTAT: Clear statistics registers**

This bit is write only. Writing a one clears the statistics registers.

- **INCSTAT: Increment statistics registers**

This bit is write only. Writing a one increments all the statistics registers by one for test purposes.

- **WESTAT: Write enable for statistics registers**

Setting this bit to one makes the statistics registers writable for functional test purposes.

- **BP: Back pressure**

If set in half duplex mode, forces collisions on all received frames.

- **TSTART: Start transmission**

Writing one to this bit starts transmission.

- **THALT: Transmit halt**

Writing one to this bit halts transmission as soon as any ongoing frame transmission ends.

35.6.2 Network Configuration Register

Name: EMAC_NCFG

Address: 0xFFFBC004

Access: Read-write

31	30	29	28	27	26	25	24
–	–	–	–	–	–	–	–

23	22	21	20	19	18	17	16
–	–	–	–	IRXFCS	EFRHD	DRFCS	RLCE

15	14	13	12	11	10	9	8
RBOF		PAE	RTY	CLK		–	BIG

7	6	5	4	3	2	1	0
UNI	MTI	NBC	CAF	JFRAME	–	FD	SPD

- **SPD: Speed**

Set to 1 to indicate 100 Mbit/s operation, 0 for 10 Mbit/s. The value of this pin is reflected on the `speed` pin.

- **FD: Full Duplex**

If set to 1, the transmit block ignores the state of collision and carrier sense and allows receive while transmitting. Also controls the `half_duplex` pin.

- **CAF: Copy All Frames**

When set to 1, all valid frames are received.

- **JFRAME: Jumbo Frames**

Set to one to enable jumbo frames of up to 10240 bytes to be accepted.

- **NBC: No Broadcast**

When set to 1, frames addressed to the broadcast address of all ones are not received.

- **MTI: Multicast Hash Enable**

When set, multicast frames are received when the 6-bit hash function of the destination address points to a bit that is set in the hash register.

- **UNI: Unicast Hash Enable**

When set, unicast frames are received when the 6-bit hash function of the destination address points to a bit that is set in the hash register.

- **BIG: Receive 1536 bytes frames**

Setting this bit means the EMAC receives frames up to 1536 bytes in length. Normally, the EMAC would reject any frame above 1518 bytes.

- **CLK: MDC clock divider**

Set according to system clock speed. This determines by what number system clock is divided to generate MDC. For conformance with 802.3, MDC must not exceed 2.5 MHz (MDC is only active during MDIO read and write operations)

.

CLK	MDC
00	MCK divided by 8 (MCK up to 20 MHz)
01	MCK divided by 16 (MCK up to 40 MHz)
10	MCK divided by 32 (MCK up to 80 MHz)
11	MCK divided by 64 (MCK up to 160 MHz)

- **RTY: Retry test**

Must be set to zero for normal operation. If set to one, the back off between collisions is always one slot time. Setting this bit to one helps testing the too many retries condition. Also used in the pause frame tests to reduce the pause counters decrement time from 512 bit times, to every `rx_clk` cycle.

- **PAE: Pause Enable**

When set, transmission pauses when a valid pause frame is received.

- **RBOF: Receive Buffer Offset**

Indicates the number of bytes by which the received data is offset from the start of the first receive buffer.

RBOF	Offset
00	No offset from start of receive buffer
01	One-byte offset from start of receive buffer
10	Two-byte offset from start of receive buffer
11	Three-byte offset from start of receive buffer

- **RLCE: Receive Length field Checking Enable**

When set, frames with measured lengths shorter than their length fields are discarded. Frames containing a type ID in bytes 13 and 14 — length/type ID = 0600 — are not be counted as length errors.

- **DRFCS: Discard Receive FCS**

When set, the FCS field of received frames are not be copied to memory.

- **EFRHD:**

Enable Frames to be received in half-duplex mode while transmitting.

- **IRXFCS: Ignore RX FCS**

When set, frames with FCS/CRC errors are not rejected and no FCS error statistics are counted. For normal operation, this bit must be set to 0.

35.6.3 Network Status Register

Name: EMAC_NSR

Address: 0xFFFBC008

Access: Read-only

31	30	29	28	27	26	25	24
–	–	–	–	–	–	–	–

23	22	21	20	19	18	17	16
–	–	–	–	–	–	–	–

15	14	13	12	11	10	9	8
–	–	–	–	–	–	–	–

7	6	5	4	3	2	1	0
–	–	–	–	–	IDLE	MDIO	–

- **MDIO**

Returns status of the mdio_in pin. Use the PHY maintenance register for reading managed frames rather than this bit.

- **IDLE**

0 = The PHY logic is running.

1 = The PHY management logic is idle (i.e., has completed).

35.6.4 Transmit Status Register

Name: EMAC_TSR

Address: 0xFFFBC014

Access: Read-write

31	30	29	28	27	26	25	24
–	–	–	–	–	–	–	–

23	22	21	20	19	18	17	16
–	–	–	–	–	–	–	–

15	14	13	12	11	10	9	8
–	–	–	–	–	–	–	–

7	6	5	4	3	2	1	0
–	UND	COMP	BEX	TGO	RLE	COL	UBR

This register, when read, provides details of the status of a transmit. Once read, individual bits may be cleared by writing 1 to them. It is not possible to set a bit to 1 by writing to the register.

- **UBR: Used Bit Read**

Set when a transmit buffer descriptor is read with its used bit set. Cleared by writing a one to this bit.

- **COL: Collision Occurred**

Set by the assertion of collision. Cleared by writing a one to this bit.

- **RLE: Retry Limit exceeded**

Cleared by writing a one to this bit.

- **TGO: Transmit Go**

If high transmit is active.

- **BEX: Buffers exhausted mid frame**

If the buffers run out during transmission of a frame, then transmission stops, FCS shall be bad and tx_er asserted. Cleared by writing a one to this bit.

- **COMP: Transmit Complete**

Set when a frame has been transmitted. Cleared by writing a one to this bit.

- **UND: Transmit Underrun**

Set when transmit DMA was not able to read data from memory, either because the bus was not granted in time, because a not OK `hresp(bus error)` was returned or because a used bit was read midway through frame transmission. If this occurs, the transmitter forces `bad` CRC. Cleared by writing a one to this bit.

35.6.5 Receive Buffer Queue Pointer Register

Name: EMAC_RBQP

Address: 0xFFFBC018

Access: Read-write

31	30	29	28	27	26	25	24
ADDR							

23	22	21	20	19	18	17	16
ADDR							

15	14	13	12	11	10	9	8
ADDR							

7	6	5	4	3	2	1	0
ADDR						–	–

This register points to the entry in the receive buffer queue (descriptor list) currently being used. It is written with the start location of the receive buffer descriptor list. The lower order bits increment as buffers are used up and wrap to their original values after either 1024 buffers or when the wrap bit of the entry is set.

Reading this register returns the location of the descriptor currently being accessed. This value increments as buffers are used. Software should not use this register for determining where to remove received frames from the queue as it constantly changes as new frames are received. Software should instead work its way through the buffer descriptor queue checking the used bits.

Receive buffer writes also comprise bursts of two words and, as with transmit buffer reads, it is recommended that bit 2 is always written with zero to prevent a burst crossing a 1K boundary, in violation of section 3.6 of the AMBA specification.

- **ADDR: Receive buffer queue pointer address**

Written with the address of the start of the receive queue, reads as a pointer to the current buffer being used.

35.6.6 Transmit Buffer Queue Pointer Register

Name: EMAC_TBQP

Address: 0xFFFBC01C

Access: Read-write

31	30	29	28	27	26	25	24
ADDR							

23	22	21	20	19	18	17	16
ADDR							

15	14	13	12	11	10	9	8
ADDR							

7	6	5	4	3	2	1	0
ADDR						–	–

This register points to the entry in the transmit buffer queue (descriptor list) currently being used. It is written with the start location of the transmit buffer descriptor list. The lower order bits increment as buffers are used up and wrap to their original values after either 1024 buffers or when the wrap bit of the entry is set. This register can only be written when bit 3 in the transmit status register is low.

As transmit buffer reads consist of bursts of two words, it is recommended that bit 2 is always written with zero to prevent a burst crossing a 1K boundary, in violation of section 3.6 of the AMBA specification.

- **ADDR: Transmit buffer queue pointer address**

Written with the address of the start of the transmit queue, reads as a pointer to the first buffer of the frame being transmitted or about to be transmitted.

35.6.7 Receive Status Register

Name: EMAC_RSR

Address: 0xFFFBC020

Access: Read-write

31	30	29	28	27	26	25	24
–	–	–	–	–	–	–	–

23	22	21	20	19	18	17	16
–	–	–	–	–	–	–	–

15	14	13	12	11	10	9	8
–	–	–	–	–	–	–	–

7	6	5	4	3	2	1	0
–	–	–	–	–	OVR	REC	BNA

This register, when read, provides details of the status of a receive. Once read, individual bits may be cleared by writing 1 to them. It is not possible to set a bit to 1 by writing to the register.

- **BNA: Buffer Not Available**

An attempt was made to get a new buffer and the pointer indicated that it was owned by the processor. The DMA rereads the pointer each time a new frame starts until a valid pointer is found. This bit is set at each attempt that fails even if it has not had a successful pointer read since it has been cleared.

Cleared by writing a one to this bit.

- **REC: Frame Received**

One or more frames have been received and placed in memory. Cleared by writing a one to this bit.

- **OVR: Receive Overrun**

The DMA block was unable to store the receive frame to memory, either because the bus was not granted in time or because a not OK `hresp(bus error)` was returned. The buffer is recovered if this happens.

Cleared by writing a one to this bit.

35.6.8 Interrupt Status Register

Name: EMAC_ISR

Address: 0xFFFBC024

Access: Read-write

31	30	29	28	27	26	25	24
–	–	–	–	–	–	–	–

23	22	21	20	19	18	17	16
–	–	–	–	–	–	–	–

15	14	13	12	11	10	9	8
–	WOL	PTZ	PFR	HRESP	ROVR	–	–

7	6	5	4	3	2	1	0
TCOMP	TXERR	RLE	TUND	TXUBR	RXUBR	RCOMP	MFD

- **MFD: Management Frame Done**

The PHY maintenance register has completed its operation. Cleared on read.

- **RCOMP: Receive Complete**

A frame has been stored in memory. Cleared on read.

- **RXUBR: Receive Used Bit Read**

Set when a receive buffer descriptor is read with its used bit set. Cleared on read.

- **TXUBR: Transmit Used Bit Read**

Set when a transmit buffer descriptor is read with its used bit set. Cleared on read.

- **TUND: Ethernet Transmit Buffer Underrun**

The transmit DMA did not fetch frame data in time for it to be transmitted or `hresp` returned not OK. Also set if a used bit is read mid-frame or when a new transmit queue pointer is written. Cleared on read.

- **RLE: Retry Limit Exceeded**

Cleared on read.

- **TXERR: Transmit Error**

Transmit buffers exhausted in mid-frame - transmit error. Cleared on read.

- **TCOMP: Transmit Complete**

Set when a frame has been transmitted. Cleared on read.

- **ROVR: Receive Overrun**

Set when the receive overrun status bit gets set. Cleared on read.

- **HRESP: Hresp not OK**

Set when the DMA block sees a bus error. Cleared on read.

- **PFR: Pause Frame Received**

Indicates a valid pause has been received. Cleared on a read.

- **PTZ: Pause Time Zero**
- **Set when the pause time register, 0x38 decrements to zero. Cleared on a read.**
- **WOL: Wake On LAN**

Set when a WOL event has been triggered (This flag can be set even if the EMAC is not clocked). Cleared on a read.

35.6.9 Interrupt Enable Register

Name: EMAC_IER

Address: 0xFFFBC028

Access: Write-only

31	30	29	28	27	26	25	24
–	–	–	–	–	–	–	–

23	22	21	20	19	18	17	16
–	–	–	–	–	–	–	–

15	14	13	12	11	10	9	8
–	WOL	PTZ	PFR	HRESP	ROVR	–	–

7	6	5	4	3	2	1	0
TCOMP	TXERR	RLE	TUND	TXUBR	RXUBR	RCOMP	MFD

- **MFD: Management Frame sent**

Enable management done interrupt.

- **RCOMP: Receive Complete**

Enable receive complete interrupt.

- **RXUBR: Receive Used Bit Read**

Enable receive used bit read interrupt.

- **TXUBR: Transmit Used Bit Read**

Enable transmit used bit read interrupt.

- **TUND: Ethernet Transmit Buffer Underrun**

Enable transmit underrun interrupt.

- **RLE: Retry Limit Exceeded**

Enable retry limit exceeded interrupt.

- **TXERR**

Enable transmit buffers exhausted in mid-frame interrupt.

- **TCOMP: Transmit Complete**

Enable transmit complete interrupt.

- **ROVR: Receive Overrun**

Enable receive overrun interrupt.

- **HRESP: Hresp not OK**

Enable Hresp not OK interrupt.

- **PFR: Pause Frame Received**

Enable pause frame received interrupt.

- **PTZ: Pause Time Zero**

Enable pause time zero interrupt.

- **WOL: Wake On LAN**

Enable Wake On LAN interrupt.

35.6.10 Interrupt Disable Register

Name: EMAC_IDR

Address: 0xFFFBC02C

Access: Write-only

31	30	29	28	27	26	25	24
–	–	–	–	–	–	–	–

23	22	21	20	19	18	17	16
–	–	–	–	–	–	–	–

15	14	13	12	11	10	9	8
–	WOL	PTZ	PFR	HRESP	ROVR	–	–

7	6	5	4	3	2	1	0
TCOMP	TXERR	RLE	TUND	TXUBR	RXUBR	RCOMP	MFD

- **MFD: Management Frame sent**

Disable management done interrupt.

- **RCOMP: Receive Complete**

Disable receive complete interrupt.

- **RXUBR: Receive Used Bit Read**

Disable receive used bit read interrupt.

- **TXUBR: Transmit Used Bit Read**

Disable transmit used bit read interrupt.

- **TUND: Ethernet Transmit Buffer Underrun**

Disable transmit underrun interrupt.

- **RLE: Retry Limit Exceeded**

Disable retry limit exceeded interrupt.

- **TXERR**

Disable transmit buffers exhausted in mid-frame interrupt.

- **TCOMP: Transmit Complete**

Disable transmit complete interrupt.

- **ROVR: Receive Overrun**

Disable receive overrun interrupt.

- **HRESP: Hresp not OK**

Disable Hresp not OK interrupt.

- **PFR: Pause Frame Received**

Disable pause frame received interrupt.

- **PTZ: Pause Time Zero**

Disable pause time zero interrupt.

- **WOL: Wake On LAN**

Disable Wake On LAN interrupt.

35.6.11 Interrupt Mask Register

Name: EMAC_IMR

Address: 0xFFFBC030

Access: Read-only

31	30	29	28	27	26	25	24
–	–	–	–	–	–	–	–

23	22	21	20	19	18	17	16
–	–	–	–	–	–	–	–

15	14	13	12	11	10	9	8
–	WOL	PTZ	PFR	HRESP	ROVR	–	–

7	6	5	4	3	2	1	0
TCOMP	TXERR	RLE	TUND	TXUBR	RXUBR	RCOMP	MFD

- **MFD: Management Frame sent**

Management done interrupt masked.

- **RCOMP: Receive Complete**

Receive complete interrupt masked.

- **RXUBR: Receive Used Bit Read**

Receive used bit read interrupt masked.

- **TXUBR: Transmit Used Bit Read**

Transmit used bit read interrupt masked.

- **TUND: Ethernet Transmit Buffer Underrun**

Transmit underrun interrupt masked.

- **RLE: Retry Limit Exceeded**

Retry limit exceeded interrupt masked.

- **TXERR**

Transmit buffers exhausted in mid-frame interrupt masked.

- **TCOMP: Transmit Complete**

Transmit complete interrupt masked.

- **ROVR: Receive Overrun**

Receive overrun interrupt masked.

- **HRESP: Hresp not OK**

Hresp not OK interrupt masked.

- **PFR: Pause Frame Received**

Pause frame received interrupt masked.

- **PTZ: Pause Time Zero**

Pause time zero interrupt masked.

- **WOL: Wake On LAN**

Wake On LAN interrupt masked.

35.6.12 PHY Maintenance Register

Name: EMAC_MAN

Address: 0xFFFBC034

Access: Read-write

31	30	29	28	27	26	25	24
SOF		RW		PHYA			

23	22	21	20	19	18	17	16
PHYA	REGA					CODE	

15	14	13	12	11	10	9	8
DATA							

7	6	5	4	3	2	1	0
DATA							

- **DATA**

For a write operation this is written with the data to be written to the PHY.

After a read operation this contains the data read from the PHY.

- **CODE:**

Must be written to 10. Reads as written.

- **REGA: Register Address**

Specifies the register in the PHY to access.

- **PHYA: PHY Address**

- **RW: Read-write**

10 is read; 01 is write. Any other value is an invalid PHY management frame

- **SOF: Start of frame**

Must be written 01 for a valid frame.

35.6.13 Pause Time Register

Name: EMAC_PTR

Address: 0xFFFBC038

Access: Read-write

31	30	29	28	27	26	25	24
–	–	–	–	–	–	–	–

23	22	21	20	19	18	17	16
–	–	–	–	–	–	–	–

15	14	13	12	11	10	9	8
PTIME							

7	6	5	4	3	2	1	0
PTIME							

- **PTIME: Pause Time**

Stores the current value of the pause time register which is decremented every 512 bit times.

35.6.14 Hash Register Bottom

Name: EMAC_HRB

Address: 0xFFFBC090

Access: Read-write

31	30	29	28	27	26	25	24
ADDR							

23	22	21	20	19	18	17	16
ADDR							

15	14	13	12	11	10	9	8
ADDR							

7	6	5	4	3	2	1	0
ADDR							

- **ADDR:**

Bits 31:0 of the hash address register. See "Hash Addressing" on page 682.

35.6.15 Hash Register Top

Name: EMAC_HRT

Address: 0xFFFBC094

Access: Read-write

31	30	29	28	27	26	25	24
ADDR							

23	22	21	20	19	18	17	16
ADDR							

15	14	13	12	11	10	9	8
ADDR							

7	6	5	4	3	2	1	0
ADDR							

- **ADDR:**

Bits 63:32 of the hash address register. See "Hash Addressing" on page 682.

35.6.16 Specific Address 1 Bottom Register

Name: EMAC_SA1B

Address: 0xFFFBC098

Access: Read-write

31	30	29	28	27	26	25	24
ADDR							

23	22	21	20	19	18	17	16
ADDR							

15	14	13	12	11	10	9	8
ADDR							

7	6	5	4	3	2	1	0
ADDR							

- **ADDR**

Least significant bits of the destination address. Bit zero indicates whether the address is multicast or unicast and corresponds to the least significant bit of the first byte received.

35.6.17 Specific Address 1 Top Register

Name: EMAC_SA1T

Address: 0xFFFBC09C

Access: Read-write

31	30	29	28	27	26	25	24
–	–	–	–	–	–	–	–

23	22	21	20	19	18	17	16
–	–	–	–	–	–	–	–

15	14	13	12	11	10	9	8
ADDR							

7	6	5	4	3	2	1	0
ADDR							

- **ADDR**

The most significant bits of the destination address, that is bits 47 to 32.

35.6.18 Specific Address 2 Bottom Register

Name: EMAC_SA2B

Address: 0xFFFBC0A0

Access: Read-write

31	30	29	28	27	26	25	24
ADDR							

23	22	21	20	19	18	17	16
ADDR							

15	14	13	12	11	10	9	8
ADDR							

7	6	5	4	3	2	1	0
ADDR							

- **ADDR**

Least significant bits of the destination address. Bit zero indicates whether the address is multicast or unicast and corresponds to the least significant bit of the first byte received.

35.6.19 Specific Address 2 Top Register

Name: EMAC_SA2T

Address: 0xFFFBC0A4

Access: Read-write

31	30	29	28	27	26	25	24
–	–	–	–	–	–	–	–

23	22	21	20	19	18	17	16
–	–	–	–	–	–	–	–

15	14	13	12	11	10	9	8
ADDR							

7	6	5	4	3	2	1	0
ADDR							

- **ADDR**

The most significant bits of the destination address, that is bits 47 to 32.

35.6.20 Specific Address 3 Bottom Register

Name: EMAC_SA3B

Address: 0xFFFBC0A8

Access: Read-write

31	30	29	28	27	26	25	24
ADDR							

23	22	21	20	19	18	17	16
ADDR							

15	14	13	12	11	10	9	8
ADDR							

7	6	5	4	3	2	1	0
ADDR							

- **ADDR**

Least significant bits of the destination address. Bit zero indicates whether the address is multicast or unicast and corresponds to the least significant bit of the first byte received.

35.6.21 Specific Address 3 Top Register

Name: EMAC_SA3T

Address: 0xFFFBC0AC

Access: Read-write

31	30	29	28	27	26	25	24
–	–	–	–	–	–	–	–

23	22	21	20	19	18	17	16
–	–	–	–	–	–	–	–

15	14	13	12	11	10	9	8
ADDR							

7	6	5	4	3	2	1	0
ADDR							

- **ADDR**

The most significant bits of the destination address, that is bits 47 to 32.

35.6.22 Specific Address 4 Bottom Register

Name: EMAC_SA4B

Address: 0xFFFBC0B0

Access: Read-write

31	30	29	28	27	26	25	24
ADDR							

23	22	21	20	19	18	17	16
ADDR							

15	14	13	12	11	10	9	8
ADDR							

7	6	5	4	3	2	1	0
ADDR							

- **ADDR**

Least significant bits of the destination address. Bit zero indicates whether the address is multicast or unicast and corresponds to the least significant bit of the first byte received.

35.6.23 Specific Address 4 Top Register

Name: EMAC_SA4T

Address: 0xFFFBC0B4

Access: Read-write

31	30	29	28	27	26	25	24
–	–	–	–	–	–	–	–

23	22	21	20	19	18	17	16
–	–	–	–	–	–	–	–

15	14	13	12	11	10	9	8
ADDR							

7	6	5	4	3	2	1	0
ADDR							

- **ADDR**

The most significant bits of the destination address, that is bits 47 to 32.

35.6.24 Type ID Checking Register

Name: EMAC_TID

Address: 0xFFFBC0B8

Access: Read-write

31	30	29	28	27	26	25	24
–	–	–	–	–	–	–	–

23	22	21	20	19	18	17	16
–	–	–	–	–	–	–	–

15	14	13	12	11	10	9	8
TID							

7	6	5	4	3	2	1	0
TID							

- **TID: Type ID checking**

For use in comparisons with received frames TypeID/Length field.

35.6.25 User Input/Output Register

Name: EMAC_USRIO

Address: 0xFFFBC0C0

Access: Read-write

31	30	29	28	27	26	25	24
–	–	–	–	–	–	–	–

23	22	21	20	19	18	17	16
–	–	–	–	–	–	–	–

15	14	13	12	11	10	9	8
–	–	–	–	–	–	–	–

7	6	5	4	3	2	1	0
–	–	–	–	–	–	CLKEN	RMII

- **RMII**

When set, this bit enables the RMII operation mode. When reset, it selects the MII mode.

- **CLKEN**

When set, this bit enables the transceiver input clock.

Setting this bit to 0 reduces power consumption when the treasurer is not used.

35.6.26 Wake-on-LAN Register

Name: EMAC_WOL

Access: Read-write

31	30	29	28	27	26	25	24
–	–	–	–	–	–	–	–

23	22	21	20	19	18	17	16
–	–	–	–	MTI	SA1	ARP	MAG

15	14	13	12	11	10	9	8
IP							

7	6	5	4	3	2	1	0
IP							

- **IP: ARP request IP address**

Written to define the least significant 16 bits of the target IP address that is matched to generate a Wake-on-LAN event. A value of zero does not generate an event, even if this is matched by the received frame.

- **MAG: Magic packet event enable**

When set, magic packet events causes the `wol` output to be asserted.

- **ARP: ARP request event enable**

When set, ARP request events causes the `wol` output to be asserted.

- **SA1: Specific address register 1 event enable**

When set, specific address 1 events causes the `wol` output to be asserted.

- **MTI: Multicast hash event enable**

When set, multicast hash events causes the `wol` output to be asserted.

35.6.27 EMAC Statistic Registers

These registers reset to zero on a read and stick at all ones when they count to their maximum value. They should be read frequently enough to prevent loss of data. The receive statistics registers are only incremented when the receive enable bit is set in the network control register. To write to these registers, bit 7 must be set in the network control register. The statistics register block contains the following registers.

35.6.27.1 Pause Frames Received Register

Name: EMAC_PFR

Address: 0xFFFBC03C

Access: Read-write

31	30	29	28	27	26	25	24
–	–	–	–	–	–	–	–

23	22	21	20	19	18	17	16
–	–	–	–	–	–	–	–

15	14	13	12	11	10	9	8
FROK							

7	6	5	4	3	2	1	0
FROK							

- **FROK: Pause Frames received OK**

A 16-bit register counting the number of good pause frames received. A good frame has a length of 64 to 1518 (1536 if bit 8 set in network configuration register) and has no FCS, alignment or receive symbol errors.

35.6.27.2 Frames Transmitted OK Register

Name: EMAC_FTO

Address: 0xFFFBC040

Access: Read-write

31	30	29	28	27	26	25	24
–	–	–	–	–	–	–	–

23	22	21	20	19	18	17	16
FTOK							

15	14	13	12	11	10	9	8
FTOK							

7	6	5	4	3	2	1	0
FTOK							

- **FTOK: Frames Transmitted OK**

A 24-bit register counting the number of frames successfully transmitted, i.e., no underrun and not too many retries.

35.6.27.3 Single Collision Frames Register

Name: EMAC_SCF

Address: 0xFFFBC044

Access: Read-write

31	30	29	28	27	26	25	24
–	–	–	–	–	–	–	–

23	22	21	20	19	18	17	16
–	–	–	–	–	–	–	–

15	14	13	12	11	10	9	8
SCF							

7	6	5	4	3	2	1	0
SCF							

- **SCF: Single Collision Frames**

A 16-bit register counting the number of frames experiencing a single collision before being successfully transmitted, i.e., no underrun.

35.6.27.4 Multicollision Frames Register

Name: EMAC_MCF

Address: 0xFFFBC048

Access: Read-write

31	30	29	28	27	26	25	24
–	–	–	–	–	–	–	–

23	22	21	20	19	18	17	16
–	–	–	–	–	–	–	–

15	14	13	12	11	10	9	8
MCF							

7	6	5	4	3	2	1	0
MCF							

- **MCF: Multicollision Frames**

A 16-bit register counting the number of frames experiencing between two and fifteen collisions prior to being successfully transmitted, i.e., no underrun and not too many retries.

35.6.27.5 Frames Received OK Register

Name: EMAC_FRO

Address: 0xFFFBC04C

Access: Read-write

31	30	29	28	27	26	25	24
–	–	–	–	–	–	–	–

23	22	21	20	19	18	17	16
FROK							

15	14	13	12	11	10	9	8
FROK							

7	6	5	4	3	2	1	0
FROK							

- **FROK: Frames Received OK**

A 24-bit register counting the number of good frames received, i.e., address recognized and successfully copied to memory. A good frame is of length 64 to 1518 bytes (1536 if bit 8 set in network configuration register) and has no FCS, alignment or receive symbol errors.

35.6.27.6 Frames Check Sequence Errors Register

Name: EMAC_FCSE

Address: 0xFFFBC050

Access: Read-write

31	30	29	28	27	26	25	24
–	–	–	–	–	–	–	–

23	22	21	20	19	18	17	16
–	–	–	–	–	–	–	–

15	14	13	12	11	10	9	8
–	–	–	–	–	–	–	–

7	6	5	4	3	2	1	0
FCSE							

- **FCSE: Frame Check Sequence Errors**

An 8-bit register counting frames that are an integral number of bytes, have bad CRC and are between 64 and 1518 bytes in length (1536 if bit 8 set in network configuration register). This register is also incremented if a symbol error is detected and the frame is of valid length and has an integral number of bytes.

35.6.27.7 Alignment Errors Register

Name: EMAC_ALE

Address: 0xFFFBC054

Access: Read-write

31	30	29	28	27	26	25	24
–	–	–	–	–	–	–	–

23	22	21	20	19	18	17	16
–	–	–	–	–	–	–	–

15	14	13	12	11	10	9	8
–	–	–	–	–	–	–	–

7	6	5	4	3	2	1	0
ALE							

- **ALE: Alignment Errors**

An 8-bit register counting frames that are not an integral number of bytes long and have bad CRC when their length is truncated to an integral number of bytes and are between 64 and 1518 bytes in length (1536 if bit 8 set in network configuration register). This register is also incremented if a symbol error is detected and the frame is of valid length and does not have an integral number of bytes.

35.6.27.8 Deferred Transmission Frames Register

Name: EMAC_DTF

Address: 0xFFFBC058

Access: Read-write

31	30	29	28	27	26	25	24
–	–	–	–	–	–	–	–

23	22	21	20	19	18	17	16
–	–	–	–	–	–	–	–

15	14	13	12	11	10	9	8
DTF							

7	6	5	4	3	2	1	0
DTF							

- **DTF: Deferred Transmission Frames**

A 16-bit register counting the number of frames experiencing deferral due to carrier sense being active on their first attempt at transmission. Frames involved in any collision are not counted nor are frames that experienced a transmit underrun.

35.6.27.9 Late Collisions Register

Name: EMAC_LCOL

Address: 0xFFFBC05C

Access: Read-write

31	30	29	28	27	26	25	24
–	–	–	–	–	–	–	–

23	22	21	20	19	18	17	16
–	–	–	–	–	–	–	–

15	14	13	12	11	10	9	8
–	–	–	–	–	–	–	–

7	6	5	4	3	2	1	0
LCOL							

- **LCOL: Late Collisions**

An 8-bit register counting the number of frames that experience a collision after the slot time (512 bits) has expired. A late collision is counted twice; i.e., both as a collision and a late collision.

35.6.27.10 Excessive Collisions Register

Name: EMAC_ECOL

Address: 0xFFFBC060

Access: Read-write

31	30	29	28	27	26	25	24
–	–	–	–	–	–	–	–

23	22	21	20	19	18	17	16
–	–	–	–	–	–	–	–

15	14	13	12	11	10	9	8
–	–	–	–	–	–	–	–

7	6	5	4	3	2	1	0
EXCOL							

- **EXCOL: Excessive Collisions**

An 8-bit register counting the number of frames that failed to be transmitted because they experienced 16 collisions.

35.6.27.11 Transmit Underrun Errors Register

Name: EMAC_TUND

Address: 0xFFFBC064

Access: Read-write

31	30	29	28	27	26	25	24
–	–	–	–	–	–	–	–

23	22	21	20	19	18	17	16
–	–	–	–	–	–	–	–

15	14	13	12	11	10	9	8
–	–	–	–	–	–	–	–

7	6	5	4	3	2	1	0
TUND							

- **TUND: Transmit Underruns**

An 8-bit register counting the number of frames not transmitted due to a transmit DMA underrun. If this register is incremented, then no other statistics register is incremented.

35.6.27.12 Carrier Sense Errors Register

Name: EMAC_CSE

Address: 0xFFFBC068

Access: Read-write

31	30	29	28	27	26	25	24
–	–	–	–	–	–	–	–

23	22	21	20	19	18	17	16
–	–	–	–	–	–	–	–

15	14	13	12	11	10	9	8
–	–	–	–	–	–	–	–

7	6	5	4	3	2	1	0
CSE							

- **CSE: Carrier Sense Errors**

An 8-bit register counting the number of frames transmitted where carrier sense was not seen during transmission or where carrier sense was deasserted after being asserted in a transmit frame without collision (no underrun). Only incremented in half-duplex mode. The only effect of a carrier sense error is to increment this register. The behavior of the other statistics registers is unaffected by the detection of a carrier sense error.

35.6.27.13 Receive Resource Errors Register

Name: EMAC_RRE

Address: 0xFFFBC06C

Access: Read-write

31	30	29	28	27	26	25	24
–	–	–	–	–	–	–	–

23	22	21	20	19	18	17	16
–	–	–	–	–	–	–	–

15	14	13	12	11	10	9	8
RRE							

7	6	5	4	3	2	1	0
RRE							

- **RRE: Receive Resource Errors**

A 16-bit register counting the number of frames that were address matched but could not be copied to memory because no receive buffer was available.

35.6.27.14 Receive Overrun Errors Register

Name: EMAC_ROV

Address: 0xFFFBC070

Access: Read-write

31	30	29	28	27	26	25	24
–	–	–	–	–	–	–	–

23	22	21	20	19	18	17	16
–	–	–	–	–	–	–	–

15	14	13	12	11	10	9	8
–	–	–	–	–	–	–	–

7	6	5	4	3	2	1	0
ROVR							

- **ROVR: Receive Overrun**

An 8-bit register counting the number of frames that are address recognized but were not copied to memory due to a receive DMA overrun.

35.6.27.15 Receive Symbol Errors Register

Name: EMAC_RSE

Address: 0xFFFBC074

Access: Read-write

31	30	29	28	27	26	25	24
–	–	–	–	–	–	–	–

23	22	21	20	19	18	17	16
–	–	–	–	–	–	–	–

15	14	13	12	11	10	9	8
–	–	–	–	–	–	–	–

7	6	5	4	3	2	1	0
RSE							

- **RSE: Receive Symbol Errors**

An 8-bit register counting the number of frames that had `rx_er` asserted during reception. Receive symbol errors are also counted as an FCS or alignment error if the frame is between 64 and 1518 bytes in length (1536 if bit 8 is set in the network configuration register). If the frame is larger, it is recorded as a jabber error.

35.6.27.16 Excessive Length Errors Register

Name: EMAC_ELE

Address: 0xFFFBC078

Access: Read-write

31	30	29	28	27	26	25	24
–	–	–	–	–	–	–	–

23	22	21	20	19	18	17	16
–	–	–	–	–	–	–	–

15	14	13	12	11	10	9	8
–	–	–	–	–	–	–	–

7	6	5	4	3	2	1	0
EXL							

- **EXL: Excessive Length Errors**

An 8-bit register counting the number of frames received exceeding 1518 bytes (1536 if bit 8 set in network configuration register) in length but do not have either a CRC error, an alignment error nor a receive symbol error.

35.6.27.17 Receive Jabbers Register

Name: EMAC_RJA

Address: 0xFFFBC07C

Access: Read-write

31	30	29	28	27	26	25	24
–	–	–	–	–	–	–	–

23	22	21	20	19	18	17	16
–	–	–	–	–	–	–	–

15	14	13	12	11	10	9	8
–	–	–	–	–	–	–	–

7	6	5	4	3	2	1	0
RJB							

- **RJB: Receive Jabbers**

An 8-bit register counting the number of frames received exceeding 1518 bytes (1536 if bit 8 set in network configuration register) in length and have either a CRC error, an alignment error or a receive symbol error.

35.6.27.18 Undersize Frames Register

Name: EMAC_USF

Address: 0xFFFBC080

Access: Read-write

31	30	29	28	27	26	25	24
–	–	–	–	–	–	–	–

23	22	21	20	19	18	17	16
–	–	–	–	–	–	–	–

15	14	13	12	11	10	9	8
–	–	–	–	–	–	–	–

7	6	5	4	3	2	1	0
USF							

- **USF: Undersize frames**

An 8-bit register counting the number of frames received less than 64 bytes in length but do not have either a CRC error, an alignment error or a receive symbol error.

35.6.27.19 SQE Test Errors Register

Name: EMAC_STE

Address: 0xFFFBC084

Access: Read-write

31	30	29	28	27	26	25	24
–	–	–	–	–	–	–	–

23	22	21	20	19	18	17	16
–	–	–	–	–	–	–	–

15	14	13	12	11	10	9	8
–	–	–	–	–	–	–	–

7	6	5	4	3	2	1	0
SQER							

- **SQER: SQE test errors**

An 8-bit register counting the number of frames where `col` was not asserted within 96 bit times (an interframe gap) of `tx_en` being deasserted in half duplex mode.

35.6.27.20 Received Length Field Mismatch Register

Name: EMAC_RLE

Address: 0xFFFBC088

Access: Read-write

31	30	29	28	27	26	25	24
–	–	–	–	–	–	–	–

23	22	21	20	19	18	17	16
–	–	–	–	–	–	–	–

15	14	13	12	11	10	9	8
–	–	–	–	–	–	–	–

7	6	5	4	3	2	1	0
RLFM							

- **RLFM: Receive Length Field Mismatch**

An 8-bit register counting the number of frames received that have a measured length shorter than that extracted from its length field. Checking is enabled through bit 16 of the network configuration register. Frames containing a type ID in bytes 13 and 14 (i.e., length/type ID ≥ 0x0600) are not counted as length field errors, neither are excessive length frames.

36. High Speed MultiMedia Card Interface (HSMCI)

36.1 Description

The High Speed Multimedia Card Interface (HSMCI) supports the MultiMedia Card (MMC) Specification V4.3, the SD Memory Card Specification V2.0, the SDIO V2.0 specification and CE-ATA V1.1.

The HSMCI includes a command register, response registers, data registers, timeout counters and error detection logic that automatically handle the transmission of commands and, when required, the reception of the associated responses and data with a limited processor overhead.

The HSMCI supports stream, block and multi block data read and write, and is compatible with the DMA Controller, minimizing processor intervention for large buffers transfers.

The HSMCI operates at a rate of up to Master Clock divided by 2 and supports the interfacing of 1 slot(s). Each slot may be used to interface with a High Speed MultiMediaCard bus (up to 30 Cards) or with an SD Memory Card. Only one slot can be selected at a time (slots are multiplexed). A bit field in the SD Card Register performs this selection.

The SD Memory Card communication is based on a 9-pin interface (clock, command, four data and three power lines) and the High Speed MultiMedia Card on a 7-pin interface (clock, command, one data, three power lines and one reserved for future use).

The SD Memory Card interface also supports High Speed MultiMedia Card operations. The main differences between SD and High Speed MultiMedia Cards are the initialization process and the bus topology.

HSMCI fully supports CE-ATA Revision 1.1, built on the MMC System Specification v4.0. The module includes dedicated hardware to issue the command completion signal and capture the host command completion signal disable.

36.2 Embedded Characteristics

- Compatibility with MultiMedia Card Specification Version 4.3
- Compatibility with SD Memory Card Specification Version 2.0
- Compatibility with SDIO Specification Version V2.0.
- Compatibility with Memory Stick PRO
- Compatibility with CE ATA

36.3 Block Diagram

Figure 36-1. Block Diagram

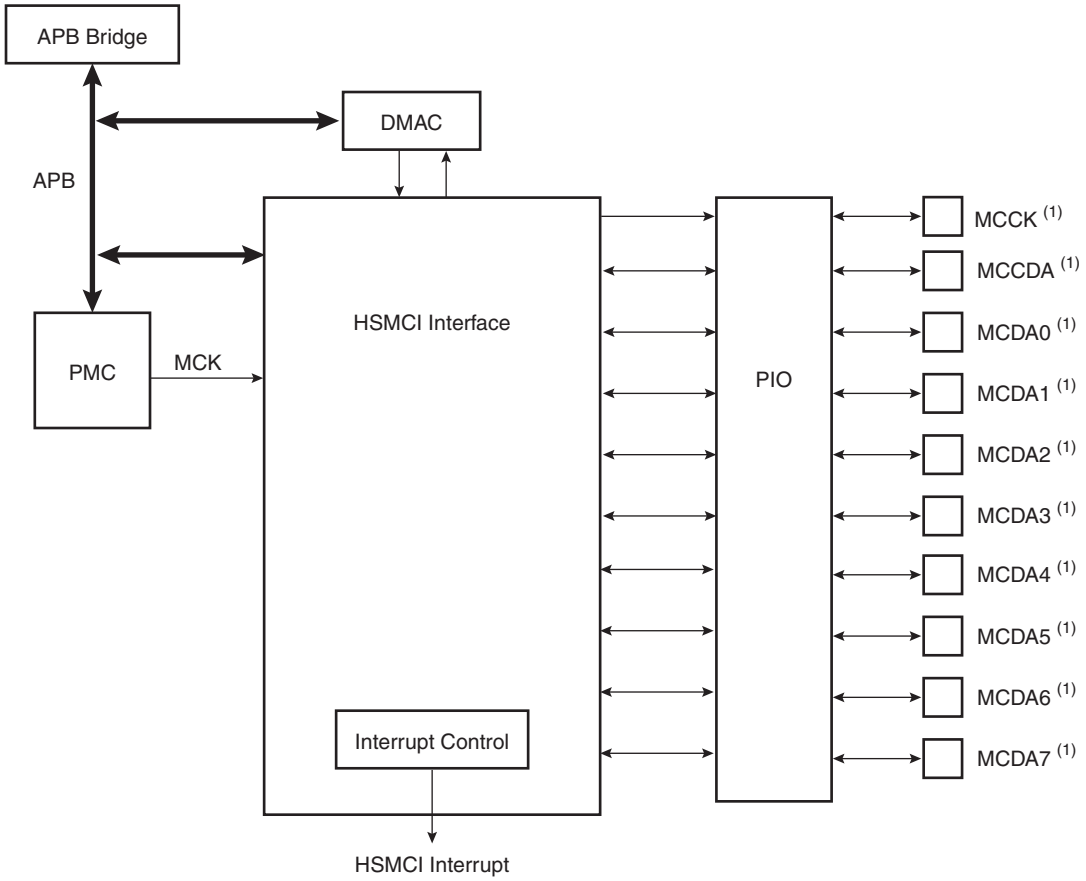

Note: 1. When several HSMCI (x HSMCI) are embedded in a product, MCCK refers to HSMCIx_CK, MCCDA to HSMCIx_CDA, MCDAy to HSMCIx_DAy.

36.4 Application Block Diagram

Figure 36-2. Application Block Diagram

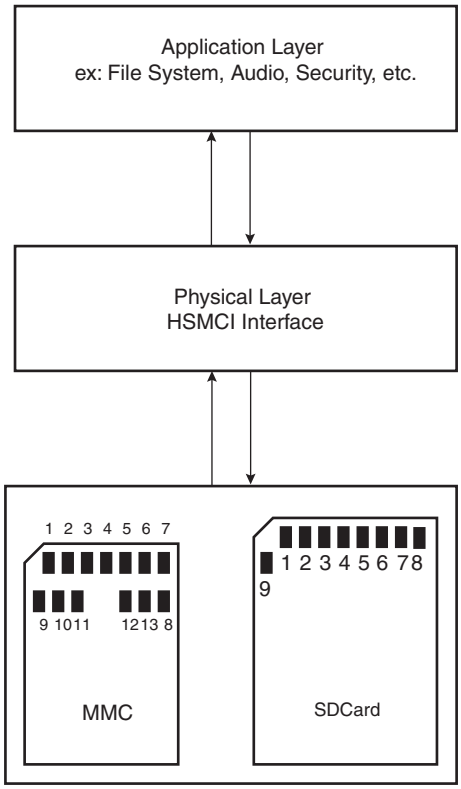

36.5 Pin Name List

Table 36-1. I/O Lines Description

Pin Name[2]	Pin Description	Type[1]	Comments
MCCDA	Command/response	I/O/PP/OD	CMD of an MMC or SDCard/SDIO
MCCK	Clock	I/O	CLK of an MMC or SD Card/SDIO
MCDA0 - MCDA7	Data 0..7 of Slot A	I/O/PP	DAT[0..7] of an MMC DAT[0..3] of an SD Card/SDIO

Notes: 1. I: Input, O: Output, PP: Push/Pull, OD: Open Drain.

2. When several HSMCI (x HSMCI) are embedded in a product, MCCK refers to HSMCIx_CK, MCCDA to HSMCIx_CDA, MCDAy to HSMCIx_DAy.

36.6 Product Dependencies

36.6.1 I/O Lines

The pins used for interfacing the High Speed MultiMedia Cards or SD Cards are multiplexed with PIO lines. The programmer must first program the PIO controllers to assign the peripheral functions to HSMCI pins.

Table 36-2. I/O Lines

Instance	Signal	I/O Line	Peripheral
HSMCI0	MCI0_CDA	PA1	A
HSMCI0	MCI0_CK	PA0	A
HSMCI0	MCI0_DA0	PA2	A
HSMCI0	MCI0_DA1	PA3	A
HSMCI0	MCI0_DA2	PA4	A
HSMCI0	MCI0_DA3	PA5	A
HSMCI0	MCI0_DA4	PA6	A
HSMCI0	MCI0_DA5	PA7	A
HSMCI0	MCI0_DA6	PA8	A
HSMCI0	MCI0_DA7	PA9	A
HSMCI1	MCI1_CDA	PA22	A
HSMCI1	MCI1_CK	PA31	A
HSMCI1	MCI1_DA0	PA23	A
HSMCI1	MCI1_DA1	PA24	A
HSMCI1	MCI1_DA2	PA25	A
HSMCI1	MCI1_DA3	PA26	A
HSMCI1	MCI1_DA4	PA27	A
HSMCI1	MCI1_DA5	PA28	A
HSMCI1	MCI1_DA6	PA29	A
HSMCI1	MCI1_DA7	PA30	A

36.6.2 Power Management

The HSMCI is clocked through the Power Management Controller (PMC), so the programmer must first configure the PMC to enable the HSMCI clock.

36.6.3 Interrupt

The HSMCI interface has an interrupt line connected to the Advanced Interrupt Controller (AIC).

Handling the HSMCI interrupt requires programming the AIC before configuring the HSMCI.

Table 36-3. Peripheral IDs

Instance	ID
HSMCI0	11
HSMCI1	29

36.7 Bus Topology

Figure 36-3. High Speed MultiMedia Memory Card Bus Topology

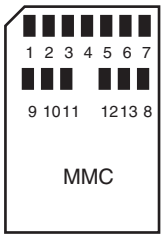

The High Speed MultiMedia Card communication is based on a 13-pin serial bus interface. It has three communication lines and four supply lines.

Table 36-4. Bus Topology

Pin Number	Name	Type[1]	Description	HSMCI Pin Name[(2)] (Slot z)
1	DAT[3]	I/O/PP	Data	MCDz3
2	CMD	I/O/PP/OD	Command/response	MCCDz
3	VSS1	S	Supply voltage ground	VSS
4	VDD	S	Supply voltage	VDD
5	CLK	I/O	Clock	MCCK
6	VSS2	S	Supply voltage ground	VSS
7	DAT[0]	I/O/PP	Data 0	MCDz0
8	DAT[1]	I/O/PP	Data 1	MCDz1
9	DAT[2]	I/O/PP	Data 2	MCDz2
10	DAT[4]	I/O/PP	Data 4	MCDz4
11	DAT[5]	I/O/PP	Data 5	MCDz5
12	DAT[6]	I/O/PP	Data 6	MCDz6
13	DAT[7]	I/O/PP	Data 7	MCDz7

Notes: 1. I: Input, O: Output, PP: Push/Pull, OD: Open Drain.

2. When several HSMCI (x HSMCI) are embedded in a product, MCCK refers to HSMCIx_CK, MCCDA to HSMCIx_CDA, MCDAy to HSMCIx_DAy.

Figure 36-4. MMC Bus Connections (One Slot)

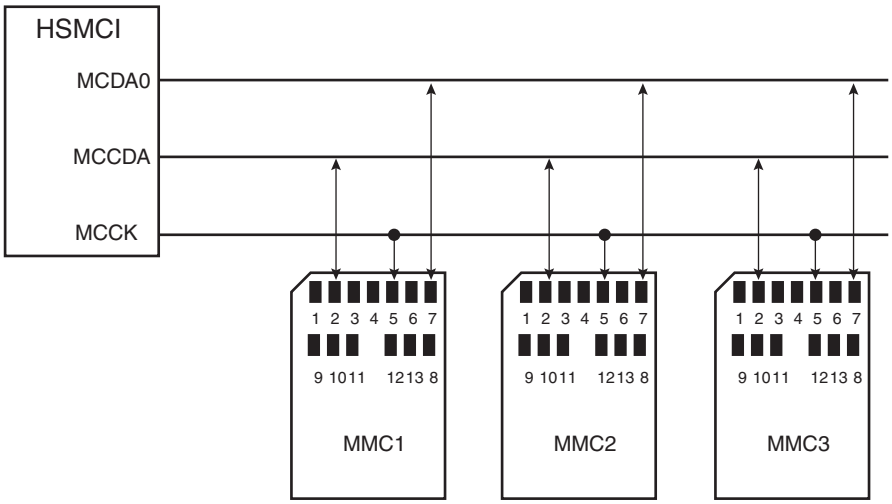

Note: When several HSMCI (x HSMCI) are embedded in a product, MCCK refers to HSMCIx_CK, MCCDA to HSMCIx_CDA MCDAy to HSMCIx_DAy.

Figure 36-5. SD Memory Card Bus Topology

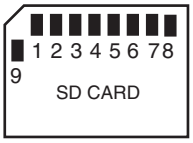

The SD Memory Card bus includes the signals listed in Table 36-5.

Table 36-5. SD Memory Card Bus Signals

Pin Number	Name	Type[1]	Description	HSMCI Pin Name[2] (Slot z)
1	CD/DAT[3]	I/O/PP	Card detect/ Data line Bit 3	MCDz3
2	CMD	PP	Command/response	MCCDz
3	VSS1	S	Supply voltage ground	VSS
4	VDD	S	Supply voltage	VDD
5	CLK	I/O	Clock	MCCK
6	VSS2	S	Supply voltage ground	VSS
7	DAT[0]	I/O/PP	Data line Bit 0	MCDz0
8	DAT[1]	I/O/PP	Data line Bit 1 or Interrupt	MCDz1
9	DAT[2]	I/O/PP	Data line Bit 2	MCDz2

Notes: 1. I: input, O: output, PP: Push Pull, OD: Open Drain.
2. When several HSMCI (x HSMCI) are embedded in a product, MCCK refers to HSMCIx_CK, MCCDA to HSMCIx_CDA, MCDAy to HSMCIx_DAy.

Figure 36-6. SD Card Bus Connections with One Slot

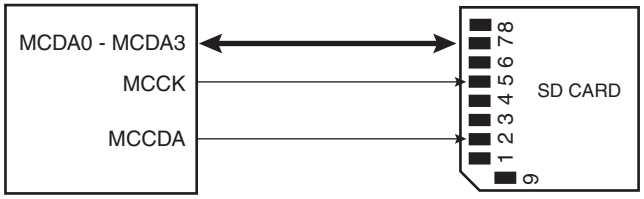

Note: When several HSMCI (x HSMCI) are embedded in a product, MCCK refers to HSMCIx_CK, MCCDA to HSMCIx_CDA MCDAy to HSMCIx_DAy.

When the HSMCI is configured to operate with SD memory cards, the width of the data bus can be selected in the HSMCI_SDCR register. Clearing the SDCBUS bit in this register means that the width is one bit; setting it means that the width is four bits. In the case of High Speed MultiMedia cards, only the data line 0 is used. The other data lines can be used as independent PIOs.

36.8 High Speed MultiMedia Card Operations

After a power-on reset, the cards are initialized by a special message-based High Speed MultiMedia Card bus protocol. Each message is represented by one of the following tokens:

- Command: A command is a token that starts an operation. A command is sent from the host either to a single card (addressed command) or to all connected cards (broadcast command). A command is transferred serially on the CMD line.
- Response: A response is a token which is sent from an addressed card or (synchronously) from all connected cards to the host as an answer to a previously received command. A response is transferred serially on the CMD line.
- Data: Data can be transferred from the card to the host or vice versa. Data is transferred via the data line.

Card addressing is implemented using a session address assigned during the initialization phase by the bus controller to all currently connected cards. Their unique CID number identifies individual cards.

The structure of commands, responses and data blocks is described in the High Speed MultiMedia-Card System Specification. See also Table 36-6 on page 734.

High Speed MultiMediaCard bus data transfers are composed of these tokens.

There are different types of operations. Addressed operations always contain a command and a response token. In addition, some operations have a data token; the others transfer their information directly within the command or response structure. In this case, no data token is present in an operation. The bits on the DAT and the CMD lines are transferred synchronous to the clock HSMCI Clock.

Two types of data transfer commands are defined:

- Sequential commands: These commands initiate a continuous data stream. They are terminated only when a stop command follows on the CMD line. This mode reduces the command overhead to an absolute minimum.
- Block-oriented commands: These commands send a data block succeeded by CRC bits.

Both read and write operations allow either single or multiple block transmission. A multiple block transmission is terminated when a stop command follows on the CMD line similarly to the sequential read or when a multiple block transmission has a pre-defined block count (See “Data Transfer Operation” on page 736.).

The HSMCI provides a set of registers to perform the entire range of High Speed MultiMedia Card operations.

36.8.1 Command - Response Operation

After reset, the HSMCI is disabled and becomes valid after setting the MCIEN bit in the HSMCI_CR Control Register.

The PWSEN bit saves power by dividing the HSMCI clock by $2^{PWSDIV} + 1$ when the bus is inactive.

The two bits, RDPROOF and WRPROOF in the HSMCI Mode Register (HSMCI_MR) allow stopping the HSMCI Clock during read or write access if the internal FIFO is full. This will guarantee data integrity, not bandwidth.

All the timings for High Speed MultiMedia Card are defined in the High Speed MultiMediaCard System Specification.

The two bus modes (open drain and push/pull) needed to process all the operations are defined in the HSMCI command register. The HSMCI_CMDR allows a command to be carried out.

For example, to perform an ALL_SEND_CID command:

	Host Command					N_{ID} Cycles					CID			
CMD	S	T	Content	CRC	E	Z	******	Z	S	T	Content	Z	Z	Z

The command ALL_SEND_CID and the fields and values for the HSMCI_CMDR Control Register are described in Table 36-6 and Table 36-7.

Table 36-6. ALL_SEND_CID Command Description

CMD Index	Type	Argument	Resp	Abbreviation	Command Description
CMD2	bcr	[31:0] stuff bits	R2	ALL_SEND_CID	Asks all cards to send their CID numbers on the CMD line

Note: bcr means broadcast command with response.

Table 36-7. Fields and Values for HSMCI_CMDR Command Register

Field	Value
CMDNB (command number)	2 (CMD2)
RSPTYP (response type)	2 (R2: 136 bits response)
SPCMD (special command)	0 (not a special command)
OPCMD (open drain command)	1
MAXLAT (max latency for command to response)	0 (NID cycles ==> 5 cycles)
TRCMD (transfer command)	0 (No transfer)
TRDIR (transfer direction)	X (available only in transfer command)
TRTYP (transfer type)	X (available only in transfer command)
IOSPCMD (SDIO special command)	0 (not a special command)

The HSMCI_ARGR contains the argument field of the command.

To send a command, the user must perform the following steps:

- Fill the argument register (HSMCI_ARGR) with the command argument.
- Set the command register (HSMCI_CMDR) (see Table 36-7).

The command is sent immediately after writing the command register.

As soon as the command register is written, then the status bit CMDRDY in the status register (HSMCI_SR) is cleared.

It is released and the end of the card response.

If the command requires a response, it can be read in the HSMCI response register (HSMCI_RSPR). The response size can be from 48 bits up to 136 bits depending on the command. The HSMCI embeds an error detection to prevent any corrupted data during the transfer.

The following flowchart shows how to send a command to the card and read the response if needed. In this example, the status register bits are polled but setting the appropriate bits in the interrupt enable register (HSMCI_IER) allows using an interrupt method.

Figure 36-7. Command/Response Functional Flow Diagram

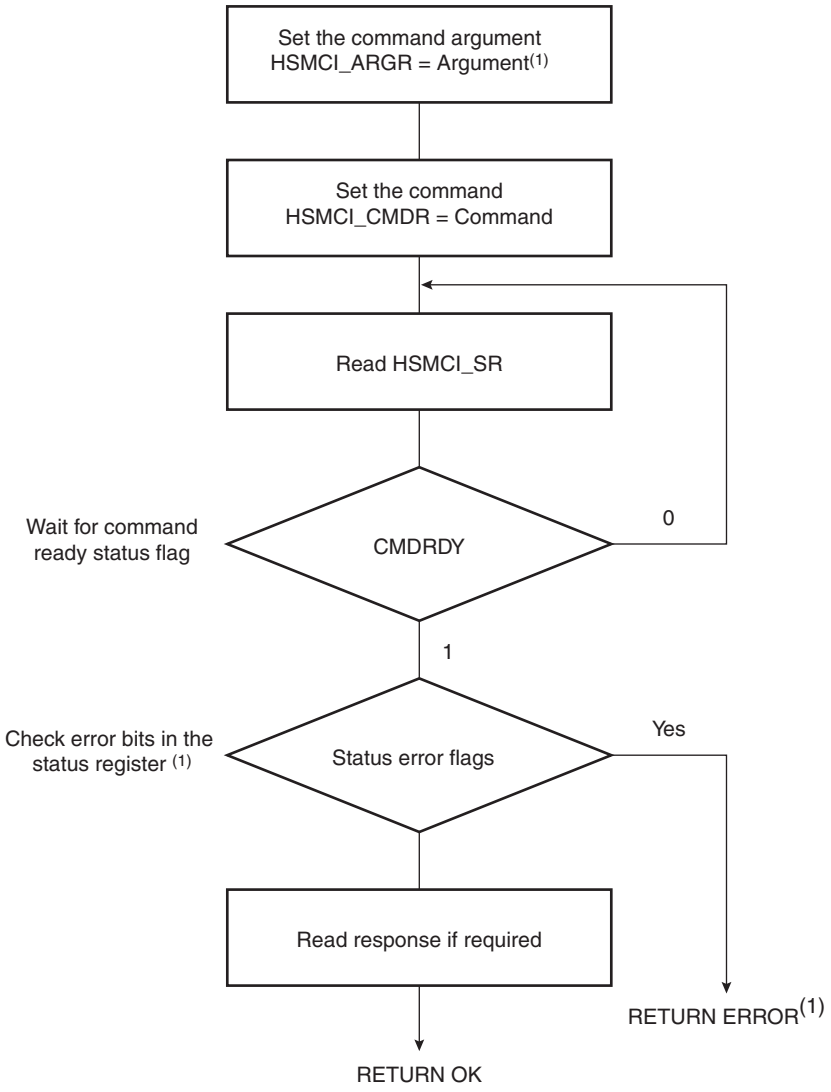

Note: 1. If the command is SEND_OP_COND, the CRC error flag is always present (refer to R3 response in the High Speed MultiMedia Card specification).

36.8.2 Data Transfer Operation

The High Speed MultiMedia Card allows several read/write operations (single block, multiple blocks, stream, etc.). These kinds of transfer can be selected setting the Transfer Type (TRTYP) field in the HSMCI Command Register (HSMCI_CMDR).

These operations can be done using the features of the DMA Controller.

In all cases, the block length (BLKLEN field) must be defined either in the mode register HSMCI_MR, or in the Block Register HSMCI_BLKR. This field determines the size of the data block.

Consequent to MMC Specification 3.1, two types of multiple block read (or write) transactions are defined (the host can use either one at any time):

- Open-ended/Infinite Multiple block read (or write):

  The number of blocks for the read (or write) multiple block operation is not defined. The card will continuously transfer (or program) data blocks until a stop transmission command is received.

- Multiple block read (or write) with pre-defined block count (since version 3.1 and higher):

  The card will transfer (or program) the requested number of data blocks and terminate the transaction. The stop command is not required at the end of this type of multiple block read (or write), unless terminated with an error. In order to start a multiple block read (or write) with pre-defined block count, the host must correctly program the HSMCI Block Register (HSMCI_BLKR). Otherwise the card will start an open-ended multiple block read. The BCNT field of the Block Register defines the number of blocks to transfer (from 1 to 65535 blocks). Programming the value 0 in the BCNT field corresponds to an infinite block transfer.

36.8.3 Read Operation

The following flowchart (Figure 36-8) shows how to read a single block with or without use of DMAC facilities. In this example, a polling method is used to wait for the end of read. Similarly, the user can configure the interrupt enable register (HSMCI_IER) to trigger an interrupt at the end of read.

Figure 36-8. Read Functional Flow Diagram

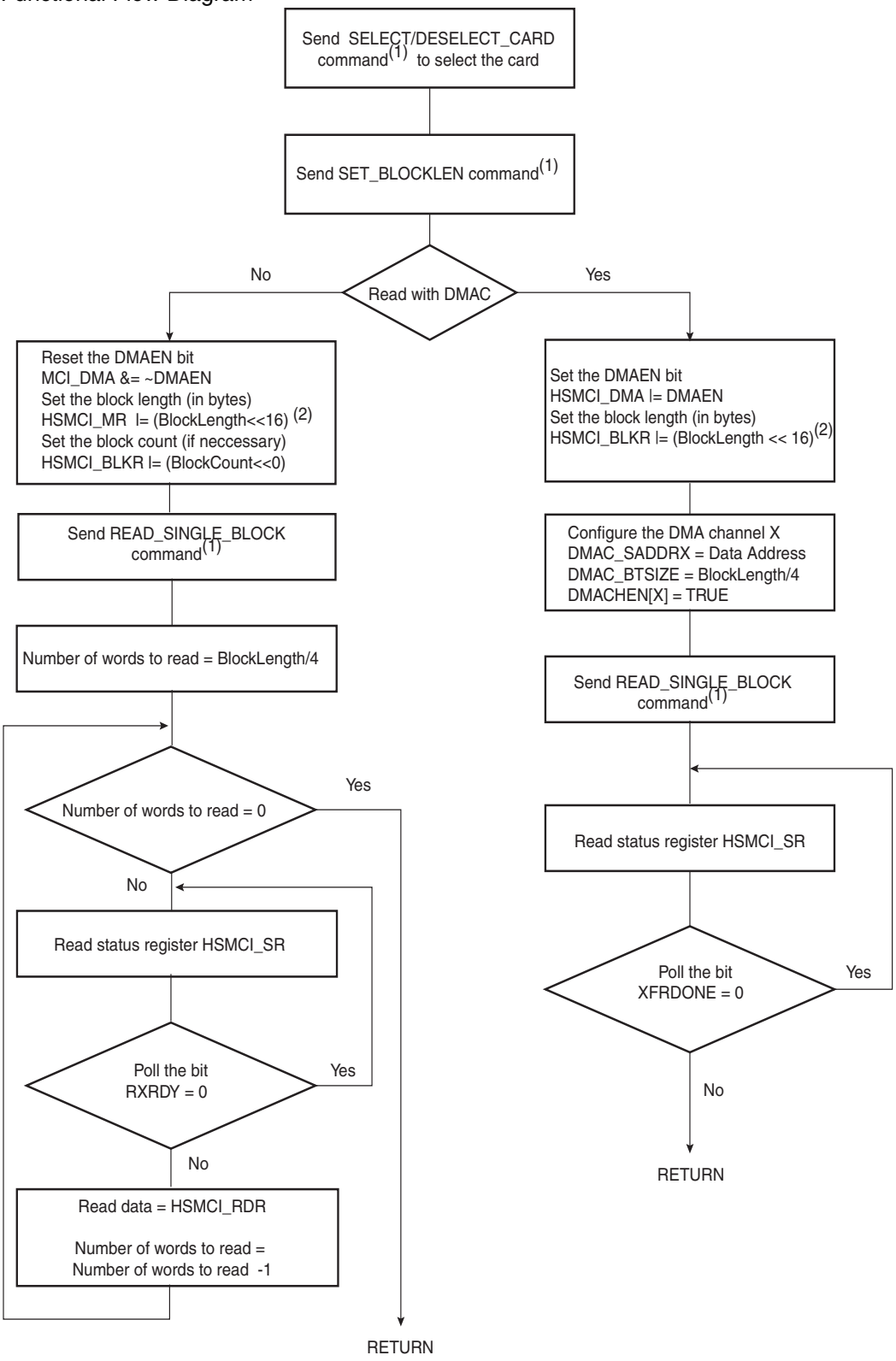

Note: 1. It is assumed that this command has been correctly sent (see Figure 36-7).
2. This field is also accessible in the HSMCI Block Register (HSMCI_BLKR).

36.8.4 Write Operation

In write operation, the HSMCI Mode Register (HSMCI_MR) is used to define the padding value when writing non-multiple block size. If the bit PADV is 0, then 0x00 value is used when padding data, otherwise 0xFF is used.

If set, the bit DMAEN in the HSMCI_DMA register enables DMA transfer.

The following flowchart (Figure 36-9) shows how to write a single block with or without use of DMA facilities. Polling or interrupt method can be used to wait for the end of write according to the contents of the Interrupt Mask Register (HSMCI_IMR).

Figure 36-9. Write Functional Flow Diagram

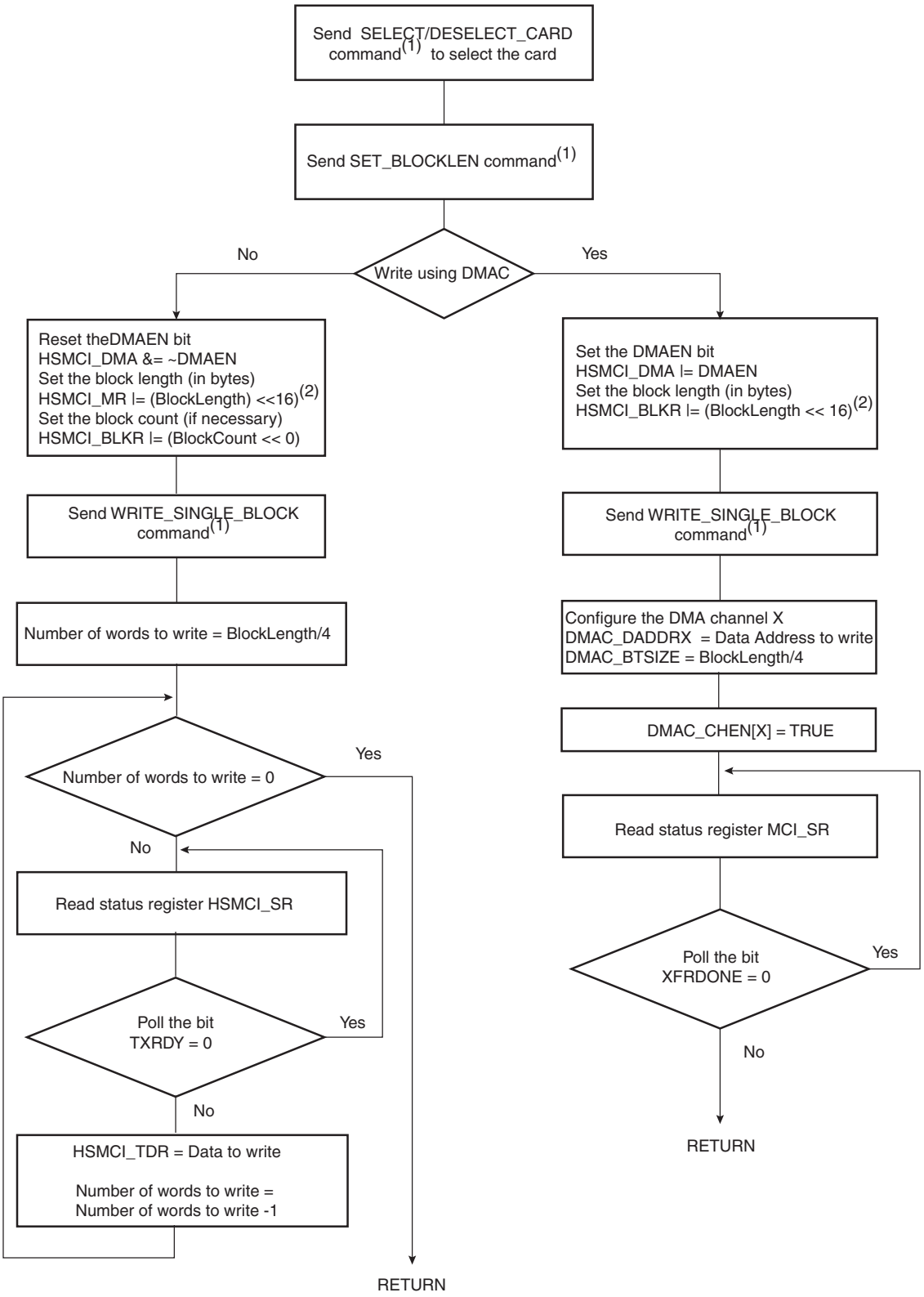

Note: 1. It is assumed that this command has been correctly sent (see Figure 36-7).
2. This field is also accessible in the HSMCI Block Register (HSMCI_BLKR).

The following flowchart (Figure 36-10) shows how to manage read multiple block and write multiple block transfers with the DMA Controller. Polling or interrupt method can be used to wait for the end of write according to the contents of the Interrupt Mask Register (HSMCI_IMR).

Figure 36-10. Read Multiple Block and Write Multiple Block

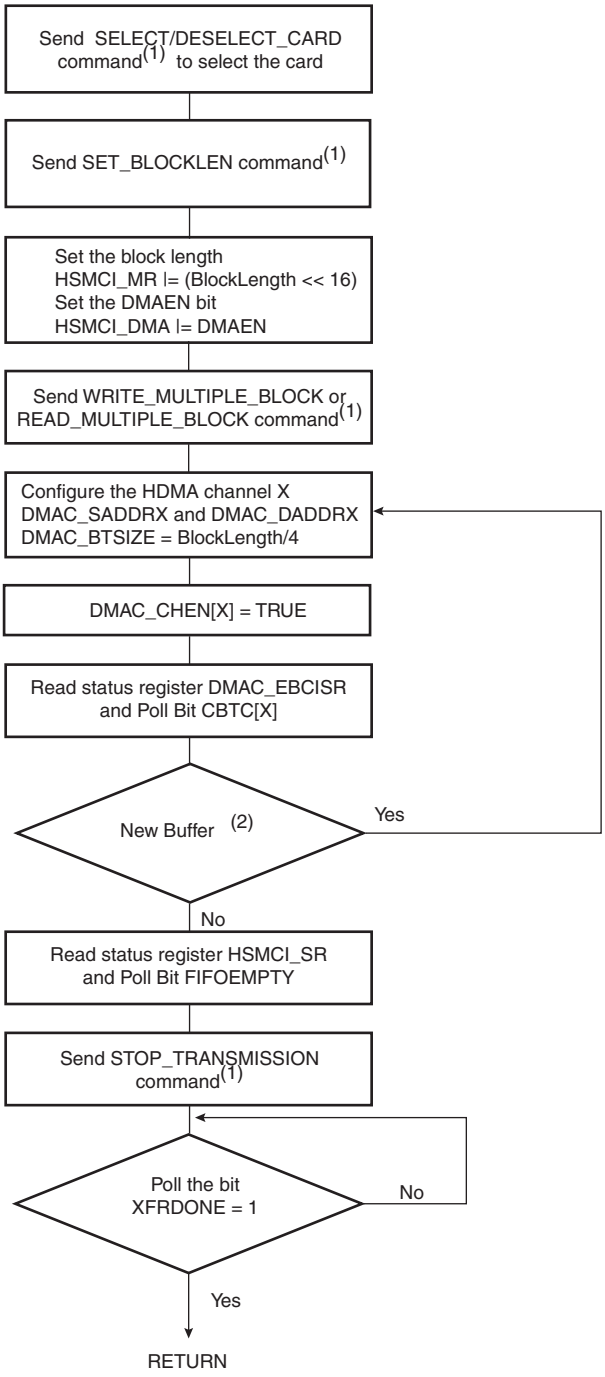

Notes: 1. It is assumed that this command has been correctly sent (see Figure 36-7).
2. Handle errors reported in HSMCI_SR.

36.8.5 WRITE_SINGLE_BLOCK Operation using DMA Controller

1. Wait until the current command execution has successfully terminated.
   a. Check that CMDRDY and NOTBUSY fields are asserted in HSMCI_SR
2. Program the block length in the card. This value defines the value *block_length.*
3. Program the block length in the HSMCI configuration register with *block_length* value.
4. Program HSMCI_DMA register with the following fields:
   – OFFSET field with *dma_offset.*
   – CHKSIZE is user defined and set according to DMAC_DCSIZE.
   – DMAEN is set to true to enable DMA hardware handshaking in the HSMCI. This bit was previously set to false.
5. Issue a WRITE_SINGLE_BLOCK command writing HSMCI_ARG then HSMCI_CMDR.
6. Program the DMA Controller.
   a. Read the channel Register to choose an available (disabled) channel.
   b. Clear any pending interrupts on the channel from the previous DMAC transfer by reading the DMAC_EBCISR register.
   c. Program the channel registers.
   d. The DMAC_SADDRx register for channel x must be set to the location of the source data. When the first data location is not word aligned, the two LSB bits define the temporary value called *dma_offset.* The two LSB bits of DMAC_SADDRx must be set to 0.
   e. The DMAC_DADDRx register for channel x must be set with the starting address of the HSMCI_FIFO address.
   f. Program DMAC_CTRLAx register of channel x with the following field's values:
      –DST_WIDTH is set to WORD.
      –SRC_WIDTH is set to WORD.
      –DCSIZE must be set according to the value of HSMCI_DMA, CHKSIZE field.
      –BTSIZE is programmed with *CEILING((block_length + dma_offset) / 4),* where the ceiling function is the function that returns the smallest integer not less than x.
   g. Program DMAC_CTRLBx register for channel x with the following field's values:
      –DST_INCR is set to INCR, the *block_length* value must not be larger than the HSMCI_FIFO aperture.
      –SRC_INCR is set to INCR.
      –FC field is programmed with memory to peripheral flow control mode.
      –both DST_DSCR and SRC_DSCR are set to 1 (descriptor fetch is disabled).
      –DIF and SIF are set with their respective layer ID. If SIF is different from DIF, the DMA controller is able to prefetch data and write HSMCI simultaneously.
   h. Program DMAC_CFGx register for channel x with the following field's values:
      –FIFOCFG defines the watermark of the DMAC channel FIFO.
      –DST_H2SEL is set to true to enable hardware handshaking on the destination.
      –DST_PER is programmed with the hardware handshaking ID of the targeted HSMCI Host Controller.
   i. Enable Channel x, writing one to DMAC_CHER[x]. The DMAC is ready and waiting for request.
7. Wait for XFRDONE in HSMCI_SR register.

36.8.6 READ_SINGLE_BLOCK Operation using DMA Controller

36.8.6.1 Block Length is Multiple of 4

1. Wait until the current command execution has successfully completed.
   a. Check that CMDRDY and NOTBUSY are asserted in HSMCI_SR.
2. Program the block length in the card. This value defines the value *block_length.*
3. Program the block length in the HSMCI configuration register with *block_length* value.
4. Set RDPROOF bit in HSMCI_MR to avoid overflow.
5. Program HSMCI_DMA register with the following fields:
   – ROPT field is set to 0.
   – OFFSET field is set to 0.
   – CHKSIZE is user defined.
   – DMAEN is set to true to enable DMAC hardware handshaking in the HSMCI. This bit was previously set to false.
6. Issue a READ_SINGLE_BLOCK command.
7. Program the DMA controller.
   a. Read the channel Register to choose an available (disabled) channel.
   b. Clear any pending interrupts on the channel from the previous DMA transfer by reading the DMAC_EBCISR register.
   c. Program the channel registers.
   d. The DMAC_SADDRx register for channel x must be set with the starting address of the HSMCI_FIFO address.
   e. The DMAC_DADDRx register for channel x must be word aligned.
   f. Program DMAC_CTRLAx register of channel x with the following field's values:
      –DST_WIDTH is set to WORD.
      –SRC_WIDTH is set to WORD.
      –SCSIZE must be set according to the value of HSMCI_DMA, CHKSIZE field.
      –BTSIZE is programmed with *block_length/4.*
   g. Program DMAC_CTRLBx register for channel x with the following field's values:
   – DST_INCR is set to INCR.
   – SRC_INCR is set to INCR.
   – FC field is programmed with peripheral to memory flow control mode.
   – both DST_DSCR and SRC_DSCR are set to 1 (descriptor fetch is disabled).
   – DIF and SIF are set with their respective layer ID. If SIF is different from DIF, the DMA controller is able to prefetch data and write HSMCI simultaneously.
   h. Program DMAC_CFGx register for channel x with the following field's values:
      –FIFOCFG defines the watermark of the DMA channel FIFO.
      –SRC_H2SEL is set to true to enable hardware handshaking on the destination.
      –SRC_PER is programmed with the hardware handshaking ID of the targeted HSMCI Host Controller.
      –Enable Channel x, writing one to DMAC_CHER[x]. The DMAC is ready and waiting for request.
8. Wait for XFRDONE in HSMCI_SR register.

36.8.6.2 Block Length is Not Multiple of 4 and Padding Not Used (ROPT field in HSMCI_DMA register set to 0)

In the previous DMA transfer flow (block length multiple of 4), the DMA controller is configured to use only WORD AHB access. When the block length is no longer a multiple of 4 this is no longer true. The DMA controller is programmed to copy exactly the block length number of bytes using 2 transfer descriptors.

1. Use the previous step until READ_SINGLE_BLOCK then
2. Program the DMA controller to use a two descriptors linked list.
   a. Read the channel Register to choose an available (disabled) channel.
   b. Clear any pending interrupts on the channel from the previous DMA transfer by reading the DMAC_EBCISR register.
   c. Program the channel registers in the Memory for the first descriptor. This descriptor will be word oriented. This descriptor is referred to as LLI_W, standing for LLI word oriented transfer.
   d. The LLI_W.DMAC_SADDRx field in memory must be set with the starting address of the HSMCI_FIFO address.
   e. The LLI_W.DMAC_DADDRx field in the memory must be word aligned.
   f. Program LLI_W.DMAC_CTRLAx with the following field's values:
      –DST_WIDTH is set to WORD.
      –SRC_WIDTH is set to WORD.
      –SCSIZE must be set according to the value of HSMCI_DMA, CHKSIZE field.
      –BTSIZE is programmed with *block_length/4.* If BTSIZE is zero, this descriptor is skipped later.
   g. Program LLI_W.DMAC_CTRLBx with the following field's values:
      –DST_INCR is set to INCR
      –SRC_INCR is set to INCR
      –FC field is programmed with peripheral to memory flow control mode.
      –SRC_DSCR is set to zero. (descriptor fetch is enabled for the SRC)
      –DST_DSCR is set to one. (descriptor fetch is disabled for the DST)
      –DIF and SIF are set with their respective layer ID. If SIF is different from DIF, DMA controller is able to prefetch data and write HSMCI simultaneously.
   h. Program LLI_W.DMAC_CFGx register for channel x with the following field's values:
      –FIFOCFG defines the watermark of the DMA channel FIFO.
      –DST_REP is set to zero meaning that address are contiguous.
      –SRC_H2SEL is set to true to enable hardware handshaking on the destination.
      –SRC_PER is programmed with the hardware handshaking ID of the targeted HSMCI Host Controller.
   i. Program LLI_W.DMAC_DSCRx with the address of LLI_B descriptor. And set DSCRx_IF to the AHB Layer ID. This operation actually links the Word oriented descriptor on the second byte oriented descriptor. When *block_length[1:0]* is equal to 0 (multiple of 4) LLI_W.DMAC_DSCRx points to 0, only LLI_W is relevant.
   j. Program the channel registers in the Memory for the second descriptor. This descriptor will be byte oriented. This descriptor is referred to as LLI_B, standing for LLI Byte oriented.
   k. The LLI_B.DMAC_SADDRx field in memory must be set with the starting address of the HSMCI_FIFO address.
   l. The LLI_B.DMAC_DADDRx is not relevant if previous word aligned descriptor was enabled. If 1, 2 or 3 bytes are transferred that address is user defined and not word aligned.
   m. Program LLI_B.DMAC_CTRLAx with the following field's values:
      –DST_WIDTH is set to BYTE.

–SRC_WIDTH is set to BYTE.

–SCSIZE must be set according to the value of HSMCI_DMA, CHKSIZE field.

–BTSIZE is programmed with *block_length[1:0].* (last 1, 2, or 3 bytes of the buffer).

n. Program LLI_B.DMAC_CTRLBx with the following field's values:

–DST_INCR is set to INCR

–SRC_INCR is set to INCR

–FC field is programmed with peripheral to memory flow control mode.

–Both SRC_DSCR and DST_DSCR are set to 1 (descriptor fetch is disabled) or Next descriptor location points to 0.

–DIF and SIF are set with their respective layer ID. If SIF is different from DIF, DMA Controller is able to prefetch data and write HSMCI simultaneously.

o. Program LLI_B.DMAC_CFGx memory location for channel x with the following field's values:

– FIFOCFG defines the watermark of the DMA channel FIFO.

– SRC_H2SEL is set to true to enable hardware handshaking on the destination.

– SRC_PER is programmed with the hardware handshaking ID of the targeted HSMCI Host Controller.

p. Program LLI_B.DMAC_DSCR with 0.

q. Program DMAC_CTRLBx register for channel x with 0. its content is updated with the LLI fetch operation.

r. Program DMAC_DSCRx with the address of LLI_W if *block_length* greater than 4 else with address of LLI_B.

s. Enable Channel x writing one to DMAC_CHER[x]. The DMAC is ready and waiting for request.

3. Wait for XFRDONE in HSMCI_SR register.

36.8.6.3 Block Length is Not Multiple of 4, with Padding Value (ROPT field in HSMCI_DMA register set to 1)

When the ROPT field is set to one, The DMA Controller performs only WORD access on the bus to transfer a non-multiple of 4 block length. Unlike previous flow, in which the transfer size is rounded to the nearest multiple of 4.

1. Program the HSMCI Interface, see previous flow.

   – ROPT field is set to 1.

2. Program the DMA Controller

   a. Read the channel Register to choose an available (disabled) channel.

   b. Clear any pending interrupts on the channel from the previous DMA transfer by reading the DMAC_EBCISR register.

   c. Program the channel registers.

   d. The DMAC_SADDRx register for channel x must be set with the starting address of the HSMCI_FIFO address.

   e. The DMAC_DADDRx register for channel x must be word aligned.

   f. Program DMAC_CTRLAx register of channel x with the following field's values:

   –DST_WIDTH is set to WORD

   –SRC_WIDTH is set to WORD

   –SCSIZE must be set according to the value of HSMCI_DMA.CHKSIZE Field.

   –BTSIZE is programmed with *CEILING(block_length/4).*

   g. Program DMAC_CTRLBx register for channel x with the following field's values:

   –DST_INCR is set to INCR

   –SRC_INCR is set to INCR

–FC field is programmed with peripheral to memory flow control mode.

–both DST_DSCR and SRC_DSCR are set to 1. (descriptor fetch is disabled)

–DIF and SIF are set with their respective layer ID. If SIF is different from DIF, the DMA Controller is able to prefetch data and write HSMCI simultaneously.

h. Program DMAC_CFGx register for channel x with the following field's values:

–FIFOCFG defines the watermark of the DMA channel FIFO.

–SRC_H2SEL is set to true to enable hardware handshaking on the destination.

–SRC_PER is programmed with the hardware handshaking ID of the targeted HSMCI Host Controller.

–Enable Channel x writing one to DMAC_CHER[x]. The DMAC is ready and waiting for request.

3. Wait for XFRDONE in HSMCI_SR register.

36.8.7 WRITE_MULTIPLE_BLOCK

36.8.7.1 One Block per Descriptor

1. Wait until the current command execution has successfully terminated.
   a. Check that CMDRDY and NOTBUSY are asserted in HSMCI_SR.
2. Program the block length in the card. This value defines the value *block_length.*
3. Program the block length in the HSMCI configuration register with *block_length* value.
4. Program HSMCI_DMA register with the following fields:
   – OFFSET field with *dma_offset.*
   – CHKSIZE is user defined.
   – DMAEN is set to true to enable DMAC hardware handshaking in the HSMCI. This bit was previously set to false.
5. Issue a WRITE_MULTIPLE_BLOCK command.
6. Program the DMA Controller to use a list of descriptors. Each descriptor transfers one block of data. Block *n* of data is transferred with descriptor LLI(n).
   a. Read the channel Register to choose an available (disabled) channel.
   b. Clear any pending interrupts on the channel from the previous DMAC transfer by reading the DMAC_EBCISR register.
   c. Program a List of descriptors.
   d. The LLI(n).DMAC_SADDRx memory location for channel x must be set to the location of the source data. When the first data location is not word aligned, the two LSB bits define the temporary value called *dma_offset.* The two LSB bits of LLI(n).DMAC_SADDRx must be set to 0.
   e. The LLI(n).DMAC_DADDRx register for channel x must be set with the starting address of the HSMCI_FIFO address.
   f. Program LLI(n).DMAC_CTRLAx register of channel x with the following field's values:

      –DST_WIDTH is set to WORD.

      –SRC_WIDTH is set to WORD.

      –DCSIZE must be set according to the value of HSMCI_DMA, CHKSIZE field.

      –BTSIZE is programmed with *CEILING((block_length + dma_offset)/4).*

   g. Program LLI(n).DMAC_CTRLBx register for channel x with the following field's values:

      –DST_INCR is set to INCR.

      –SRC_INCR is set to INCR.

      –DST_DSCR is set to 0 (fetch operation is enabled for the destination).

–SRC_DSCR is set to 1 (source address is contiguous).

–FC field is programmed with memory to peripheral flow control mode.

–Both DST_DSCR and SRC_DSCR are set to 1 (descriptor fetch is disabled).

–DIF and SIF are set with their respective layer ID. If SIF is different from DIF, DMA Controller is able to prefetch data and write HSMCI simultaneously.

h. Program LLI(n).DMAC_CFGx register for channel x with the following field's values:

–FIFOCFG defines the watermark of the DMA channel FIFO.

–DST_H2SEL is set to true to enable hardware handshaking on the destination.

–SRC_REP is set to 0. (contiguous memory access at block boundary)

–DST_PER is programmed with the hardware handshaking ID of the targeted HSMCI Host Controller.

i. If LLI(n) is the last descriptor, then LLI(n).DSCR points to 0 else LLI(n) points to the start address of LLI(n+1).

j. Program DMAC_CTRLBx for channel register x with 0. Its content is updated with the LLI fetch operation.

k. Program DMAC_DSCRx for channel register x with the address of the first descriptor LLI(0).

l. Enable Channel x writing one to DMAC_CHER[x]. The DMA is ready and waiting for request.

7. Poll CBTC[x] bit in the DMAC_EBCISR Register.
8. If a new list of buffers shall be transferred, repeat step 6. Check and handle HSMCI errors.
9. Poll FIFOEMPTY field in the HSMCI_SR.
10. Send The STOP_TRANSMISSION command writing HSMCI_ARG then HSMCI_CMDR.
11. Wait for XFRDONE in HSMCI_SR register.

36.8.8 READ_MULTIPLE_BLOCK

36.8.8.1 Block Length is a Multiple of 4

1. Wait until the current command execution has successfully terminated.
   a. Check that CMDRDY and NOTBUSY are asserted in HSMCI_SR.
2. Program the block length in the card. This value defines the value *block_length.*
3. Program the block length in the HSMCI configuration register with *block_length* value.
4. Set RDPROOF bit in HSMCI_MR to avoid overflow.
5. Program HSMCI_DMA register with the following fields:
   – ROPT field is set to 0.
   – OFFSET field is set to 0.
   – CHKSIZE is user defined.
   – DMAEN is set to true to enable DMAC hardware handshaking in the HSMCI. This bit was previously set to false.
6. Issue a READ_MULTIPLE_BLOCK command.
7. Program the DMA Controller to use a list of descriptors:

a. Read the channel Register to choose an available (disabled) channel.
b. Clear any pending interrupts on the channel from the previous DMA transfer by reading the DMAC_EBCISR register.
c. Program the channel registers in the Memory with the first descriptor. This descriptor will be word oriented. This descriptor is referred to as LLI_W(n), standing for LLI word oriented transfer for block *n*.
d. The LLI_W(n).DMAC_SADDRx field in memory must be set with the starting address of the HSMCI_FIFO address.
e. The LLI_W(n).DMAC_DADDRx field in the memory must be word aligned.
f. Program LLI_W(n).DMAC_CTRLAx with the following field's values:
   –DST_WIDTH is set to WORD
   –SRC_WIDTH is set to WORD
   –SCSIZE must be set according to the value of HSMCI_DMA, CHKSIZE field.
   –BTSIZE is programmed with *block_length/4.*
g. Program LLI_W(n).DMAC_CTRLBx with the following field's values:
   –DST_INCR is set to INCR.
   –SRC_INCR is set to INCR.
   –FC field is programmed with peripheral to memory flow control mode.
   –SRC_DSCR is set to 0 (descriptor fetch is enabled for the SRC).
   –DST_DSCR is set to TRUE (descriptor fetch is disabled for the DST).
   –DIF and SIF are set with their respective layer ID. If SIF is different from DIF, the DMA Controller is able to prefetch data and write HSMCI simultaneously.
h. Program LLI_W(n).DMAC_CFGx register for channel x with the following field's values:
   –FIFOCFG defines the watermark of the DMA channel FIFO.
   –DST_REP is set to zero. Addresses are contiguous.
   –SRC_H2SEL is set to true to enable hardware handshaking on the destination.
   –SRC_PER is programmed with the hardware handshaking ID of the targeted HSMCI Host Controller.
i. Program LLI_W(n).DMAC_DSCRx with the address of LLI_W(n+1) descriptor. And set the DSCRx_IF to the AHB Layer ID. This operation actually links descriptors together. If LLI_W(n) is the last descriptor then LLI_W(n).DMAC_DSCRx points to 0.
j. Program DMAC_CTRLBx register for channel x with 0. its content is updated with the LLI Fetch operation.
k. Program DMAC_DSCRx register for channel x with the address of LLI_W(0).
l. Enable Channel x writing one to DMAC_CHER[x]. The DMA is ready and waiting for request.

8. Poll CBTC[x] bit in the DMAC_EBCISR Register.
9. If a new list of buffer shall be transferred repeat step 6. Check and handle HSMCI errors.
10. Poll FIFOEMPTY field in the HSMCI_SR.
11. Send The STOP_TRANSMISSION command writing the HSMCI_ARG then the HSMCI_CMDR.
12. Wait for XFRDONE in HSMCI_SR register.

36.8.8.2 Block Length is Not Multiple of 4. (ROPT field in HSMCI_DMA register set to 0)

Two DMA Transfer descriptors are used to perform the HSMCI block transfer.

1. Use the previous step to configure the HSMCI to perform a READ_MULTIPLE_BLOCK command.
2. Issue a READ_MULTIPLE_BLOCK command.
3. Program the DMA Controller to use a list of descriptors.

a. Read the channel register to choose an available (disabled) channel.

b. Clear any pending interrupts on the channel from the previous DMAC transfer by reading the DMAC_EBCISR register.

c. For every block of data repeat the following procedure:

d. Program the channel registers in the Memory for the first descriptor. This descriptor will be word oriented. This descriptor is referred to as LLI_W(n) standing for LLI word oriented transfer for block *n*.

e. The LLI_W(n).DMAC_SADDRx field in memory must be set with the starting address of the HSMCI_FIFO address.

f. The LLI_W(n).DMAC_DADDRx field in the memory must be word aligned.

g. Program LLI_W(n).DMAC_CTRLAx with the following field's values:

–DST_WIDTH is set to WORD.

–SRC_WIDTH is set to WORD.

–SCSIZE must be set according to the value of HSMCI_DMA, CHKSIZE field.

–BTSIZE is programmed with *block_length/4.* If BTSIZE is zero, this descriptor is skipped later.

h. Program LLI_W(n).DMAC_CTRLBx with the following field's values:

–DST_INCR is set to INCR.

–SRC_INCR is set to INCR.

–FC field is programmed with peripheral to memory flow control mode.

–SRC_DSCR is set to 0 (descriptor fetch is enabled for the SRC).

–DST_DSCR is set to TRUE (descriptor fetch is disabled for the DST).

–DIF and SIF are set with their respective layer ID. If SIF is different from DIF, the DMA Controller is able to prefetch data and write HSMCI simultaneously.

i. Program LLI_W(n).DMAC_CFGx register for channel x with the following field's values:

–FIFOCFG defines the watermark of the DMA channel FIFO.

–DST_REP is set to zero. Address are contiguous.

–SRC_H2SEL is set to true to enable hardware handshaking on the destination.

–SRC_PER is programmed with the hardware handshaking ID of the targeted HSMCI Host Controller.

j. Program LLI_W(n).DMAC_DSCRx with the address of LLI_B(n) descriptor. And set the DSCRx_IF to the AHB Layer ID. This operation actually links the Word oriented descriptor on the second byte oriented descriptor. When *block_length[1:0]* is equal to 0 (multiple of 4) LLI_W(n).DMAC_DSCRx points to 0, only LLI_W(n) is relevant.

k. Program the channel registers in the Memory for the second descriptor. This descriptor will be byte oriented. This descriptor is referred to as LLI_B(n), standing for LLI Byte oriented.

l. The LLI_B(n).DMAC_SADDRx field in memory must be set with the starting address of the HSMCI_FIFO address.

m. The LLI_B(n).DMAC_DADDRx is not relevant if previous word aligned descriptor was enabled. If 1, 2 or 3 bytes are transferred, that address is user defined and not word aligned.

n. Program LLI_B(n).DMAC_CTRLAx with the following field's values:

–DST_WIDTH is set to BYTE.

–SRC_WIDTH is set to BYTE.

–SCSIZE must be set according to the value of HSMCI_DMA, CHKSIZE field.

–BTSIZE is programmed with *block_length[1:0].* (last 1, 2, or 3 bytes of the buffer).

o. Program LLI_B(n).DMAC_CTRLBx with the following field's values:

– DST_INCR is set to INCR.

– SRC_INCR is set to INCR.
– FC field is programmed with peripheral to memory flow control mode.
– Both SRC_DSCR and DST_DSCR are set to 1 (descriptor fetch is disabled) or Next descriptor location points to 0.
– DIF and SIF are set with their respective layer ID. If SIF is different from DIF, the DMA Controller is able to prefetch data and write HSMCI simultaneously.

p. Program LLI_B(n).DMAC_CFGx memory location for channel x with the following field's values:
– FIFOCFG defines the watermark of the DMAC channel FIFO.
– SRC_H2SEL is set to true to enable hardware handshaking on the destination.
– SRC_PER is programmed with the hardware handshaking ID of the targeted HSMCI Host Controller

q. Program LLI_B(n).DMAC_DSCR with address of descriptor LLI_W(n+1). If LLI_B(n) is the last descriptor, then program LLI_B(n).DMAC_DSCR with 0.
r. Program DMAC_CTRLBx register for channel x with 0, its content is updated with the LLI Fetch operation.
s. Program DMAC_DSCRx with the address of LLI_W(0) if *block_length* is greater than 4 else with address of LLI_B(0).
t. Enable Channel x writing one to DMAC_CHER[x]. The DMAC is ready and waiting for request.

4. Enable DMADONE interrupt in the HSMCI_IER register.
5. Poll CBTC[x] bit in the DMAC_EBCISR Register.
6. If a new list of buffers shall be transferred, repeat step 7. Check and handle HSMCI errors.
7. Poll FIFOEMPTY field in the HSMCI_SR.
8. Send The STOP_TRANSMISSION command writing HSMCI_ARG then HSMCI_CMDR.
9. Wait for XFRDONE in HSMCI_SR register.

36.8.8.3 Block Length is Not a Multiple of 4. (ROPT field in HSMCI_DMA register set to 1)

One DMA Transfer descriptor is used to perform the HSMCI block transfer, the DMA writes a rounded up value to the nearest multiple of 4.

1. Use the previous step to configure the HSMCI to perform a READ_MULTIPLE_BLOCK.
2. Set the ROPT field to 1 in the HSMCI_DMA register.
3. Issue a READ_MULTIPLE_BLOCK command.
4. Program the DMA controller to use a list of descriptors:
   a. Read the channel Register to choose an available (disabled) channel.
   b. Clear any pending interrupts on the channel from the previous DMAC transfer by reading the DMAC_EBCISR register.
   c. Program the channel registers in the Memory with the first descriptor. This descriptor will be word oriented. This descriptor is referred to as LLI_W(n), standing for LLI word oriented transfer for block *n*.
   d. The LLI_W(n).DMAC_SADDRx field in memory must be set with the starting address of the HSMCI_FIFO address.
   e. The LLI_W(n).DMAC_DADDRx field in the memory must be word aligned.
   f. Program LLI_W(n).DMAC_CTRLAx with the following field's values:
      –DST_WIDTH is set to WORD.
      –SRC_WIDTH is set to WORD.
      –SCSIZE must be set according to the value of HSMCI_DMA, CHKSIZE field.
      –BTSIZE is programmed with *Ceiling(block_length/4).*

g. Program LLI_W(n).DMAC_CTRLBx with the following field's values:
   –DST_INCR is set to INCR
   –SRC_INCR is set to INCR
   –FC field is programmed with peripheral to memory flow control mode.
   –SRC_DSCR is set to 0. (descriptor fetch is enabled for the SRC)
   –DST_DSCR is set to TRUE. (descriptor fetch is disabled for the DST)
   –DIF and SIF are set with their respective layer ID. If SIF is different from DIF, the DMA Controller is able to prefetch data and write HSMCI simultaneously.

h. Program LLI_W(n).DMAC_CFGx register for channel x with the following field's values:
   –FIFOCFG defines the watermark of the DMA channel FIFO.
   –DST_REP is set to zero. Address are contiguous.
   –SRC_H2SEL is set to true to enable hardware handshaking on the destination.
   –SRC_PER is programmed with the hardware handshaking ID of the targeted HSMCI Host Controller.

i. Program LLI_W(n).DMAC_DSCRx with the address of LLI_W(n+1) descriptor. And set the DSCRx_IF to the AHB Layer ID. This operation actually links descriptors together. If LLI_W(n) is the last descriptor then LLI_W(n).DMAC_DSCRx points to 0.

j. Program DMAC_CTRLBx register for channel x with 0. its content is updated with the LLI Fetch operation.

k. Program DMAC_DSCRx register for channel x with the address of LLI_W(0).

l. Enable Channel x writing one to DMAC_CHER[x]. The DMAC is ready and waiting for request.

5. Poll CBTC[x] bit in the DMAC_EBCISR Register.
6. If a new list of buffers shall be transferred repeat step 7. Check and handle HSMCI errors.
7. Poll FIFOEMPTY field in the HSMCI_SR.
8. Send The STOP_TRANSMISSION command writing the HSMCI_ARG then the HSMCI_CMDR.
9. Wait for XFRDONE in HSMCI_SR register.

36.9 SD/SDIO Card Operation

The High Speed MultiMedia Card Interface allows processing of SD Memory (Secure Digital Memory Card) and SDIO (SD Input Output) Card commands.

SD/SDIO cards are based on the Multi Media Card (MMC) format, but are physically slightly thicker and feature higher data transfer rates, a lock switch on the side to prevent accidental overwriting and security features. The physical form factor, pin assignment and data transfer protocol are forward-compatible with the High Speed Multi-Media Card with some additions. SD slots can actually be used for more than flash memory cards. Devices that support SDIO can use small devices designed for the SD form factor, such as GPS receivers, Wi-Fi or Bluetooth adapters, modems, barcode readers, IrDA adapters, FM radio tuners, RFID readers, digital cameras and more.

SD/SDIO is covered by numerous patents and trademarks, and licensing is only available through the Secure Digital Card Association.

The SD/SDIO Card communication is based on a 9-pin interface (Clock, Command, 4 x Data and 3 x Power lines). The communication protocol is defined as a part of this specification. The main difference between the SD/SDIO Card and the High Speed MultiMedia Card is the initialization process.

The SD/SDIO Card Register (HSMCI_SDCR) allows selection of the Card Slot and the data bus width.

The SD/SDIO Card bus allows dynamic configuration of the number of data lines. After power up, by default, the SD/SDIO Card uses only DAT0 for data transfer. After initialization, the host can change the bus width (number of active data lines).

36.9.1 SDIO Data Transfer Type

SDIO cards may transfer data in either a multi-byte (1 to 512 bytes) or an optional block format (1 to 511 blocks), while the SD memory cards are fixed in the block transfer mode. The TRTYP field in the HSMCI Command Register (HSMCI_CMDR) allows to choose between SDIO Byte or SDIO Block transfer.

The number of bytes/blocks to transfer is set through the BCNT field in the HSMCI Block Register (HSMCI_BLKR). In SDIO Block mode, the field BLKLEN must be set to the data block size while this field is not used in SDIO Byte mode.

An SDIO Card can have multiple I/O or combined I/O and memory (called Combo Card). Within a multi-function SDIO or a Combo card, there are multiple devices (I/O and memory) that share access to the SD bus. In order to allow the sharing of access to the host among multiple devices, SDIO and combo cards can implement the optional concept of suspend/resume (Refer to the SDIO Specification for more details). To send a suspend or a resume command, the host must set the SDIO Special Command field (IOSPCMD) in the HSMCI Command Register.

36.9.2 SDIO Interrupts

Each function within an SDIO or Combo card may implement interrupts (Refer to the SDIO Specification for more details). In order to allow the SDIO card to interrupt the host, an interrupt function is added to a pin on the DAT[1] line to signal the card's interrupt to the host. An SDIO interrupt on each slot can be enabled through the HSMCI Interrupt Enable Register. The SDIO interrupt is sampled regardless of the currently selected slot.

36.10 CE-ATA Operation

CE-ATA maps the streamlined ATA command set onto the MMC interface. The ATA task file is mapped onto MMC register space.

CE-ATA utilizes five MMC commands:

- GO_IDLE_STATE (CMD0): used for hard reset.
- STOP_TRANSMISSION (CMD12): causes the ATA command currently executing to be aborted.
- FAST_IO (CMD39): Used for single register access to the ATA taskfile registers, 8 bit access only.
- RW_MULTIPLE_REGISTERS (CMD60): used to issue an ATA command or to access the control/status registers.
- RW_MULTIPLE_BLOCK (CMD61): used to transfer data for an ATA command.

CE-ATA utilizes the same MMC command sequences for initialization as traditional MMC devices.

36.10.1 Executing an ATA Polling Command

1. Issue READ_DMA_EXT with RW_MULTIPLE_REGISTER (CMD60) for 8 kB of DATA.
2. Read the ATA status register until DRQ is set.
3. Issue RW_MULTIPLE_BLOCK (CMD61) to transfer DATA.
4. Read the ATA status register until DRQ && BSY are set to 0.

36.10.2 Executing an ATA Interrupt Command

1. Issue READ_DMA_EXT with RW_MULTIPLE_REGISTER (CMD60) for 8kB of DATA with nIEN field set to zero to enable the command completion signal in the device.
2. Issue RW_MULTIPLE_BLOCK (CMD61) to transfer DATA.
3. Wait for Completion Signal Received Interrupt.

36.10.3 Aborting an ATA Command

If the host needs to abort an ATA command prior to the completion signal it must send a special command to avoid potential collision on the command line. The SPCMD field of the HSMCI_CMDR must be set to 3 to issue the CE-ATA completion Signal Disable Command.

36.10.4 CE-ATA Error Recovery

Several methods of ATA command failure may occur, including:

- No response to an MMC command, such as RW_MULTIPLE_REGISTER (CMD60).
- CRC is invalid for an MMC command or response.
- CRC16 is invalid for an MMC data packet.
- ATA Status register reflects an error by setting the ERR bit to one.
- The command completion signal does not arrive within a host specified time out period.

Error conditions are expected to happen infrequently. Thus, a robust error recovery mechanism may be used for each error event. The recommended error recovery procedure after a timeout is:

- Issue the command completion signal disable if nIEN was cleared to zero and the RW_MULTIPLE_BLOCK (CMD61) response has been received.
- Issue STOP_TRANSMISSION (CMD12) and successfully receive the R1 response.
- Issue a software reset to the CE-ATA device using FAST_IO (CMD39).

If STOP_TRANMISSION (CMD12) is successful, then the device is again ready for ATA commands. However, if the error recovery procedure does not work as expected or there is another timeout, the next step is to issue GO_IDLE_STATE (CMD0) to the device. GO_IDLE_STATE (CMD0) is a hard reset to the device and completely resets all device states.

Note that after issuing GO_IDLE_STATE (CMD0), all device initialization needs to be completed again. If the CE-ATA device completes all MMC commands correctly but fails the ATA command with the ERR bit set in the ATA Status register, no error recovery action is required. The ATA command itself failed implying that the device could not complete the action requested, however, there was no communication or protocol failure. After the device signals an error by setting the ERR bit to one in the ATA Status register, the host may attempt to retry the command.

36.11 HSMCI Boot Operation Mode

In boot operation mode, the processor can read boot data from the slave (MMC device) by keeping the CMD line low after power-on before issuing CMD1. The data can be read from either the boot area or user area, depending on register setting.

36.11.1 Boot Procedure, Processor Mode

1. Configure the HSMCI data bus width programming SDCBUS Field in the HSMCI_SDCR register. The BOOT_BUS_WIDTH field located in the device Extended CSD register must be set accordingly.
2. Set the byte count to 512 bytes and the block count to the desired number of blocks, writing BLKLEN and BCNT fields of the HSMCI_BLKR Register.
3. Issue the Boot Operation Request command by writing to the HSMCI_CMDR register with SPCMD field set to BOOTREQ, TRDIR set to READ and TRCMD set to “start data transfer”.
4. The BOOT_ACK field located in the HSMCI_CMDR register must be set to one, if the BOOT_ACK field of the MMC device located in the Extended CSD register is set to one.
5. Host processor can copy boot data sequentially as soon as the RXRDY flag is asserted.
6. When Data transfer is completed, host processor shall terminate the boot stream by writing the HSMCI_CMDR register with SPCMD field set to BOOTEND.

36.11.2 Boot Procedure, DMA Mode

1. Configure the HSMCI data bus width by programming SDCBUS Field in the HSMCI_SDCR register. The BOOT_BUS_WIDTH field in the device Extended CSD register must be set accordingly.
2. Set the byte count to 512 bytes and the block count to the desired number of blocks by writing BLKLEN and BCNT fields of the HSMCI_BLKR Register.
3. Enable DMA transfer in the HSMCI_DMA register.
4. Configure DMA controller, program the total amount of data to be transferred and enable the relevant channel.
5. Issue the Boot Operation Request command by writing to the HSMCI_CMDR register with SPCND set to BOOTREQ, TRDIR set to READ and TRCMD set to “start data transfer”.
6. DMA controller copies the boot partition to the memory.
7. When DMA transfer is completed, host processor shall terminate the boot stream by writing the HSMCI_CMDR register with SPCMD field set to BOOTEND.

36.12 HSMCI Transfer Done Timings

36.12.1 Definition

The XFRDONE flag in the HSMCI_SR indicates exactly when the read or write sequence is finished.

36.12.2 Read Access

During a read access, the XFRDONE flag behaves as shown in Figure 36-11.

Figure 36-11. XFRDONE During a Read Access

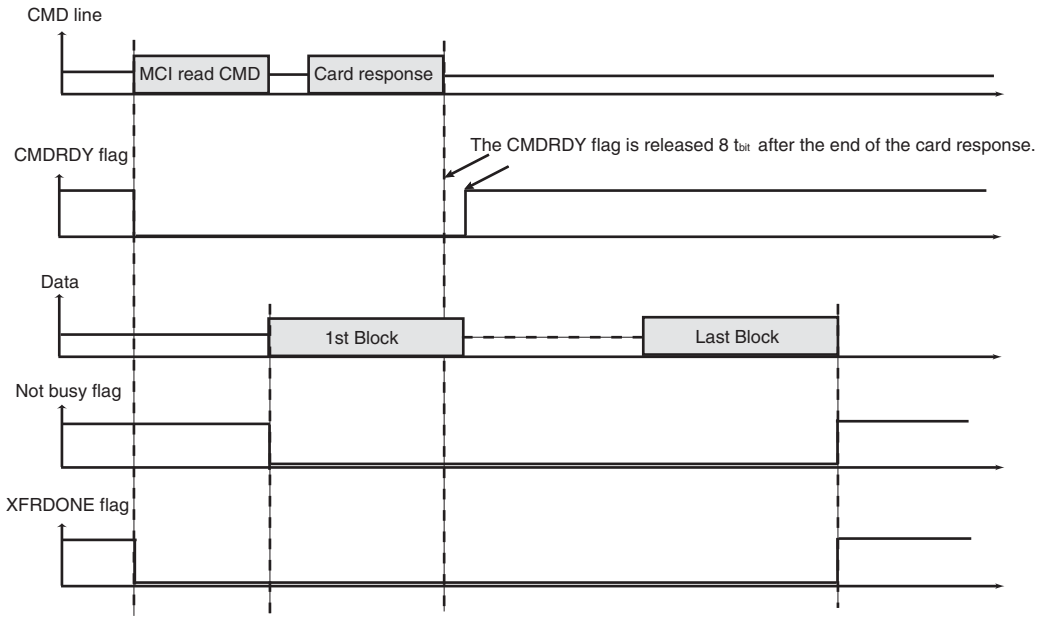

36.12.3 Write Access

During a write access, the XFRDONE flag behaves as shown in Figure 36-12.

Figure 36-12. XFRDONE During a Write Access

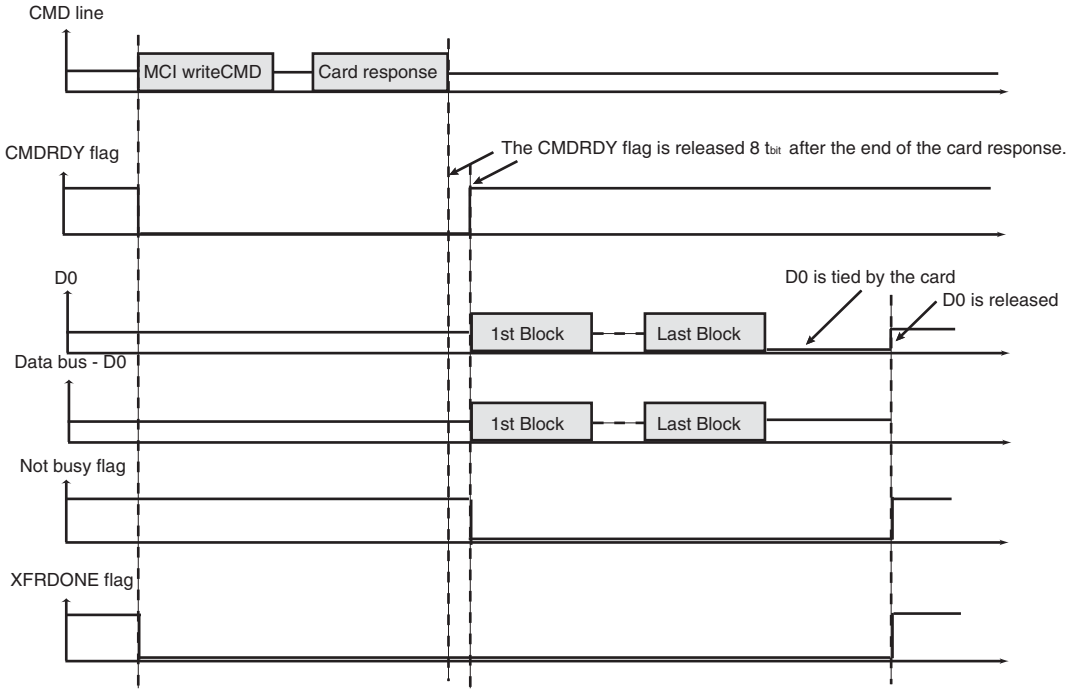

36.13 High Speed Multimedia Card Interface (HSMCI) User Interface

Table 36-8. Register Mapping

Offset	Register	Name	Access	Reset
0x00	Control Register	HSMCI_CR	Write	–
0x04	Mode Register	HSMCI_MR	Read-write	0x0
0x08	Data Timeout Register	HSMCI_DTOR	Read-write	0x0
0x0C	SD/SDIO Card Register	HSMCI_SDCR	Read-write	0x0
0x10	Argument Register	HSMCI_ARGR	Read-write	0x0
0x14	Command Register	HSMCI_CMDR	Write	–
0x18	Block Register	HSMCI_BLKR	Read-write	0x0
0x1C	Completion Signal Timeout Register	HSMCI_CSTOR	Read-write	0x0
0x20	Response Register(1)	HSMCI_RSPR	Read	0x0
0x24	Response Register(1)	HSMCI_RSPR	Read	0x0
0x28	Response Register(1)	HSMCI_RSPR	Read	0x0
0x2C	Response Register(1)	HSMCI_RSPR	Read	0x0
0x30	Receive Data Register	HSMCI_RDR	Read	0x0
0x34	Transmit Data Register	HSMCI_TDR	Write	–
0x38 - 0x3C	Reserved	–	–	–
0x40	Status Register	HSMCI_SR	Read	0xC0E5
0x44	Interrupt Enable Register	HSMCI_IER	Write	–
0x48	Interrupt Disable Register	HSMCI_IDR	Write	–
0x4C	Interrupt Mask Register	HSMCI_IMR	Read	0x0
0x50	DMA Configuration Register	HSMCI_DMA	Read-write	0x00
0x54	Configuration Register	HSMCI_CFG	Read-write	0x00
0x58-0xE0	Reserved	–	–	–
0xE4	Write Protection Mode Register	HSMCI_WPMR	Read-write	–
0xE8	Write Protection Status Register	HSMCI_WPSR	Read-only	–
0xEC - 0xFC	Reserved	–	–	–
0x100-0x124	Reserved	–	–	–
0x200-0x3FFC	FIFO Memory Aperture	HSMCI_FIFO	Read-write	0x0

Note: 1. The response register can be read by N accesses at the same HSMCI_RSPR or at consecutive addresses (0x20 to 0x2C). N depends on the size of the response.

36.13.1 HSMCI Control Register

Name: HSMCI_CR

Addresses: 0xFFF80000 (0), 0xFFFD0000 (1)

Access: Write-only

31	30	29	28	27	26	25	24
–	–	–	–	–	–	–	–
23	22	21	20	19	18	17	16
–	–	–	–	–	–	–	–
15	14	13	12	11	10	9	8
–	–	–	–	–	–	–	–
7	6	5	4	3	2	1	0
SWRST	–	–	–	PWSDIS	PWSEN	HSMCIDIS	MCIEN

- **MCIEN: Multi-Media Interface Enable**

0 = No effect.

1 = Enables the Multi-Media Interface if MCDIS is 0.

- **MCIDIS: Multi-Media Interface Disable**

0 = No effect.

1 = Disables the Multi-Media Interface.

- **PWSEN: Power Save Mode Enable**

0 = No effect.

1 = Enables the Power Saving Mode if PWSDIS is 0.

Warning: Before enabling this mode, the user must set a value different from 0 in the PWSDIV field (Mode Register, HSMCI_MR).

- **PWSDIS: Power Save Mode Disable**

0 = No effect.

1 = Disables the Power Saving Mode.

- **SWRST: Software Reset**

0 = No effect.

1 = Resets the HSMCI. A software triggered hardware reset of the HSMCI interface is performed.

36.13.2 HSMCI Mode Register

Name: HSMCI_MR

Addresses: 0xFFF80004 (0), 0xFFFD0004 (1)

Access: Read-write

31	30	29	28	27	26	25	24
BLKLEN							
23	22	21	20	19	18	17	16
BLKLEN							
15	14	13	12	11	10	9	8
–	PADV	FBYTE	WRPROOF	RDPROOF	PWSDIV		
7	6	5	4	3	2	1	0
CLKDIV							

- **CLKDIV: Clock Divider**

High Speed MultiMedia Card Interface clock (MCCK or HSMCI_CK) is Master Clock (MCK) divided by (2*(CLKDIV+1)).

- **PWSDIV: Power Saving Divider**

High Speed MultiMedia Card Interface clock is divided by $2^{(PWSDIV)} + 1$ when entering Power Saving Mode.

Warning: This value must be different from 0 before enabling the Power Save Mode in the HSMCI_CR (HSMCI_PWSEN bit).

- **RDPROOF Read Proof Enable**

Enabling Read Proof allows to stop the HSMCI Clock during read access if the internal FIFO is full. This will guarantee data integrity, not bandwidth.

0 = Disables Read Proof.

1 = Enables Read Proof.

- **WRPROOF Write Proof Enable**

Enabling Write Proof allows to stop the HSMCI Clock during write access if the internal FIFO is full. This will guarantee data integrity, not bandwidth.

0 = Disables Write Proof.

1 = Enables Write Proof.

- **FBYTE: Force Byte Transfer**

Enabling Force Byte Transfer allow byte transfers, so that transfer of blocks with a size different from modulo 4 can be supported.

Warning: BLKLEN value depends on FBYTE.

0 = Disables Force Byte Transfer.

1 = Enables Force Byte Transfer.

- **PADV: Padding Value**

0 = 0x00 value is used when padding data in write transfer.

1 = 0xFF value is used when padding data in write transfer.

PADV may be only in manual transfer.

- **BLKLEN: Data Block Length**

This field determines the size of the data block.

This field is also accessible in the HSMCI Block Register (HSMCI_BLKR).

Bits 16 and 17 must be set to 0 if FBYTE is disabled.

Note: In SDIO Byte mode, BLKLEN field is not used.

36.13.3 HSMCI Data Timeout Register

Name: HSMCI_DTOR

Addresses: 0xFFF80008 (0), 0xFFFD0008 (1)

Access: Read-write

31	30	29	28	27	26	25	24
–	–	–	–	–	–	–	–
23	22	21	20	19	18	17	16
–	–	–	–	–	–	–	–
15	14	13	12	11	10	9	8
–	–	–	–	–	–	–	–
7	6	5	4	3	2	1	0
–	DTOMUL			DTOCYC			

- **DTOCYC: Data Timeout Cycle Number**

- **DTOMUL: Data Timeout Multiplier**

These fields determine the maximum number of Master Clock cycles that the HSMCI waits between two data block transfers. It equals (DTOCYC x Multiplier).

Multiplier is defined by DTOMUL as shown in the following table:

DTOMUL			Multiplier
0	0	0	1
0	0	1	16
0	1	0	128
0	1	1	256
1	0	0	1024
1	0	1	4096
1	1	0	65536
1	1	1	1048576

If the data time-out set by DTOCYC and DTOMUL has been exceeded, the Data Time-out Error flag (DTOE) in the HSMCI Status Register (HSMCI_SR) raises.

36.13.4 HSMCI SDCard/SDIO Register

Name: HSMCI_SDCR

Addresses: 0xFFF8000C (0), 0xFFFD000C (1)

Access: Read-write

31	30	29	28	27	26	25	24
–	–	–	–	–	–	–	–
23	22	21	20	19	18	17	16
–	–	–	–	–	–	–	–
15	14	13	12	11	10	9	8
–	–	–	–	–	–	–	–
7	6	5	4	3	2	1	0
SDCBUS		–	–	–	–	SDCSEL	

- **SDCSEL: SDCard/SDIO Slot**

SDCSEL		SDCard/SDIO Slot
0	0	Slot A is selected.
0	1	–
1	0	–
1	1	–

- **SDCBUS: SDCard/SDIO Bus Width**

SDCBUS		BUS WIDTH
0	0	1 bit
1	0	4 bit
1	1	8 bit

36.13.5 HSMCI Argument Register

Name: HSMCI_ARGR

Addresses: 0xFFF80010 (0), 0xFFFD0010 (1)

Access: Read-write

31	30	29	28	27	26	25	24
ARG							
23	22	21	20	19	18	17	16
ARG							
15	14	13	12	11	10	9	8
ARG							
7	6	5	4	3	2	1	0
ARG							

- **ARG: Command Argument**

36.13.6 HSMCI Command Register

Name: HSMCI_CMDR

Addresses: 0xFFF80014 (0), 0xFFFD0014 (1)

Access: Write-only

31	30	29	28	27	26	25	24
–	–	–	–	BOOT_ACK	ATACS	IOSPCMD	
23	22	21	20	19	18	17	16
–	–	TRTYP			TRDIR	TRCMD	
15	14	13	12	11	10	9	8
–	–	–	MAXLAT	OPDCMD	SPCMD		
7	6	5	4	3	2	1	0
RSPTYP		CMDNB					

This register is write-protected while CMDRDY is 0 in HSMCI_SR. If an Interrupt command is sent, this register is only writeable by an interrupt response (field SPCMD). This means that the current command execution cannot be interrupted or modified.

- **CMDNB: Command Number**

- **RSPTYP: Response Type**

RSP		Response Type
0	0	No response.
0	1	48-bit response.
1	0	136-bit response.
1	1	R1b response type

- **SPCMD: Special Command**

SPCMD			Command
0	0	0	Not a special CMD.
0	0	1	Initialization CMD: 74 clock cycles for initialization sequence.
0	1	0	Synchronized CMD: Wait for the end of the current data block transfer before sending the pending command.
0	1	1	CE-ATA Completion Signal disable Command. The host cancels the ability for the device to return a command completion signal on the command line.
1	0	0	Interrupt command: Corresponds to the Interrupt Mode (CMD40).

SPCMD			Command
1	0	1	Interrupt response: Corresponds to the Interrupt Mode (CMD40).
1	1	0	Boot Operation Request. Start a boot operation mode, the host processor can read boot data from the MMC device directly.
1	1	1	End Boot Operation. This command allows the host processor to terminate the boot operation mode.

- **OPDCMD: Open Drain Command**

0 = Push pull command

1 = Open drain command

- **MAXLAT: Max Latency for Command to Response**

0 = 5-cycle max latency

1 = 64-cycle max latency

- **TRCMD: Transfer Command**

TRCMD		Transfer Type
0	0	No data transfer
0	1	Start data transfer
1	0	Stop data transfer
1	1	Reserved

- **TRDIR: Transfer Direction**

0 = Write

1 = Read

- **TRTYP: Transfer Type**

TRTYP			Transfer Type
0	0	0	MMC/SDCard Single Block
0	0	1	MMC/SDCard Multiple Block
0	1	0	MMC Stream
0	1	1	Reserved
1	0	0	SDIO Byte
1	0	1	SDIO Block
1	1	0	Reserved
1	1	1	Reserved

- **IOSPCMD: SDIO Special Command**

IOSPCMD		SDIO Special Command Type
0	0	Not a SDIO Special Command
0	1	SDIO Suspend Command
1	0	SDIO Resume Command
1	1	Reserved

- **ATACS: ATA with Command Completion Signal**

0 = Normal operation mode.

1 = This bit indicates that a completion signal is expected within a programmed amount of time (HSMCI_CSTOR).

- **BOOT_ACK: Boot Operation Acknowledge.**

The master can choose to receive the boot acknowledge from the slave when a Boot Request command is issued. When set to one this field indicates that a Boot acknowledge is expected within a programmable amount of time defined with DTOMUL and DTOCYC fields located in the HSMCI_DTOR register. If the acknowledge pattern is not received then an acknowledge timeout error is raised. If the acknowledge pattern is corrupted then an acknowledge pattern error is set.

36.13.7 HSMCI Block Register

Name: HSMCI_BLKR

Addresses: 0xFFF80018 (0), 0xFFFD0018 (1)

Access: Read-write

31	30	29	28	27	26	25	24
BLKLEN							
23	22	21	20	19	18	17	16
BLKLEN							
15	14	13	12	11	10	9	8
BCNT							
7	6	5	4	3	2	1	0
BCNT							

- **BCNT: MMC/SDIO Block Count - SDIO Byte Count**

This field determines the number of data byte(s) or block(s) to transfer.

The transfer data type and the authorized values for BCNT field are determined by the TRTYP field in the HSMCI Command Register (HSMCI_CMDR):

TRTYP			Type of Transfer	BCNT Authorized Values
0	0	1	MMC/SDCard Multiple Block	From 1 to 65635: Value 0 corresponds to an infinite block transfer.
1	0	0	SDIO Byte	From 1 to 512 bytes: Value 0 corresponds to a 512-byte transfer. Values from 0x200 to 0xFFFF are forbidden.
1	0	1	SDIO Block	From 1 to 511 blocks: Value 0 corresponds to an infinite block transfer. Values from 0x200 to 0xFFFF are forbidden.
Other values			-	Reserved.

Warning: In SDIO Byte and Block modes, writing to the 7 last bits of BCNT field, is forbidden and may lead to unpredictable results.

- **BLKLEN: Data Block Length**

This field determines the size of the data block.

This field is also accessible in the HSMCI Mode Register (HSMCI_MR).

Bits 16 and 17 must be set to 0 if FBYTE is disabled.

Note: In SDIO Byte mode, BLKLEN field is not used.

36.13.8 HSMCI Completion Signal Timeout Register

Name: HSMCI_CSTOR

Addresses: 0xFFF8001C (0), 0xFFFD001C (1)

Access: Read-write

31	30	29	28	27	26	25	24
–	–	–	–	–	–	–	–
23	22	21	20	19	18	17	16
–	–	–	–	–	–	–	–
15	14	13	12	11	10	9	8
–	–	–	–	–	–	–	–
7	6	5	4	3	2	1	0
–	CSTOMUL			CSTOCYC			

- **CSTOCYC: Completion Signal Timeout Cycle Number**

- **CSTOMUL: Completion Signal Timeout Multiplier**

These fields determine the maximum number of Master Clock cycles that the HSMCI waits between two data block transfers. Its value is calculated by (CSTOCYC x Multiplier).

These fields determine the maximum number of Master Clock cycles that the HSMCI waits between the end of the data transfer and the assertion of the completion signal. The data transfer comprises data phase and the optional busy phase. If a non-DATA ATA command is issued, the HSMCI starts waiting immediately after the end of the response until the completion signal.

Multiplier is defined by CSTOMUL as shown in the following table:

CSTOMUL			Multiplier
0	0	0	1
0	0	1	16
0	1	0	128
0	1	1	256
1	0	0	1024
1	0	1	4096
1	1	0	65536
1	1	1	1048576

If the data time-out set by CSTOCYC and CSTOMUL has been exceeded, the Completion Signal Time-out Error flag (CSTOE) in the HSMCI Status Register (HSMCI_SR) raises.

36.13.9 HSMCI Response Register

Name: HSMCI_RSPR

Addresses: 0xFFF80020 (0), 0xFFFD0020 (1)

Access: Read-only

31	30	29	28	27	26	25	24
RSP							
23	22	21	20	19	18	17	16
RSP							
15	14	13	12	11	10	9	8
RSP							
7	6	5	4	3	2	1	0
RSP							

- **RSP: Response**

Note: 1. The response register can be read by N accesses at the same HSMCI_RSPR or at consecutive addresses (0x20 to 0x2C). N depends on the size of the response.

36.13.10 HSMCI Receive Data Register

Name: HSMCI_RDR

Addresses: 0xFFF80030 (0), 0xFFFD0030 (1)

Access: Read-only

31	30	29	28	27	26	25	24
DATA							
23	22	21	20	19	18	17	16
DATA							
15	14	13	12	11	10	9	8
DATA							
7	6	5	4	3	2	1	0
DATA							

- **DATA: Data to Read**

36.13.11 HSMCI Transmit Data Register

Name: HSMCI_TDR

Addresses: 0xFFF80034 (0), 0xFFFD0034 (1)

Access: Write-only

31	30	29	28	27	26	25	24
DATA							
23	22	21	20	19	18	17	16
DATA							
15	14	13	12	11	10	9	8
DATA							
7	6	5	4	3	2	1	0
DATA							

- **DATA: Data to Write**

36.13.12 HSMCI Status Register

Name: HSMCI_SR

Addresses: 0xFFF80040 (0), 0xFFFD0040 (1)

Access: Read-only

31	30	29	28	27	26	25	24
UNRE	OVRE	ACKRCVE	ACKRCV	XFRDONE	FIFOEMPTY	DMADONE	BLKOVRE
23	22	21	20	19	18	17	16
CSTOE	DTOE	DCRCE	RTOE	RENDE	RCRCE	RDIRE	RINDE
15	14	13	12	11	10	9	8
–	–	CSRCV	SDIOWAIT	–	–	–	MCI_SDIOIRQA
7	6	5	4	3	2	1	0
–	–	NOTBUSY	DTIP	BLKE	TXRDY	RXRDY	CMDRDY

- **CMDRDY: Command Ready**

0 = A command is in progress.

1 = The last command has been sent. Cleared when writing in the HSMCI_CMDR.

- **RXRDY: Receiver Ready**

0 = Data has not yet been received since the last read of HSMCI_RDR.

1 = Data has been received since the last read of HSMCI_RDR.

- **TXRDY: Transmit Ready**

0 = The last data written in HSMCI_TDR has not yet been transferred in the Shift Register.

1 = The last data written in HSMCI_TDR has been transferred in the Shift Register.

- **BLKE: Data Block Ended**

This flag must be used only for Write Operations.

0 = A data block transfer is not yet finished. Cleared when reading the HSMCI_SR.

1 = A data block transfer has ended, including the CRC16 Status transmission.
the flag is set for each transmitted CRC Status.

Refer to the MMC or SD Specification for more details concerning the CRC Status.

- **DTIP: Data Transfer in Progress**

0 = No data transfer in progress.

1 = The current data transfer is still in progress, including CRC16 calculation. Cleared at the end of the CRC16 calculation.

- **NOTBUSY: HSMCI Not Busy**

This flag must be used only for Write Operations.

A block write operation uses a simple busy signalling of the write operation duration on the data (DAT0) line: during a data transfer block, if the card does not have a free data receive buffer, the card indicates this condition by pulling down the data line (DAT0) to LOW. The card stops pulling down the data line as soon as at least one receive buffer for the defined data transfer block length becomes free.

The NOTBUSY flag allows to deal with these different states.

0 = The HSMCI is not ready for new data transfer. Cleared at the end of the card response.

1 = The HSMCI is ready for new data transfer. Set when the busy state on the data line has ended. This corresponds to a free internal data receive buffer of the card.

Refer to the MMC or SD Specification for more details concerning the busy behavior.

For all the read operations, the NOTBUSY flag is cleared at the end of the host command.
For the Infinite Read Multiple Blocks, the NOTBUSY flag is set at the end of the STOP_TRANSMISSION host command (CMD12).
For the Single Block Reads, the NOTBUSY flag is set at the end of the data read block.
For the Multiple Block Reads with pre-defined block count, the NOTBUSY flag is set at the end of the last received data block.

- **SDIOIRQA: SDIO Interrupt for Slot A**

0 = No interrupt detected on SDIO Slot A.

1 = An SDIO Interrupt on Slot A occurred. Cleared when reading the HSMCI_SR.

- **SDIOWAIT: SDIO Read Wait Operation Status**

0 = Normal Bus operation.

1 = The data bus has entered IO wait state.

- **CSRCV: CE-ATA Completion Signal Received**

0 = No completion signal received since last status read operation.

1 = The device has issued a command completion signal on the command line. Cleared by reading in the HSMCI_SR register.

- **RINDE: Response Index Error**

0 = No error.

1 = A mismatch is detected between the command index sent and the response index received. Cleared when writing in the HSMCI_CMDR.

- **RDIRE: Response Direction Error**

0 = No error.

1 = The direction bit from card to host in the response has not been detected.

- **RCRCE: Response CRC Error**

0 = No error.

1 = A CRC7 error has been detected in the response. Cleared when writing in the HSMCI_CMDR.

- **RENDE: Response End Bit Error**

0 = No error.

1 = The end bit of the response has not been detected. Cleared when writing in the HSMCI_CMDR.

- **RTOE: Response Time-out Error**

0 = No error.

1 = The response time-out set by MAXLAT in the HSMCI_CMDR has been exceeded. Cleared when writing in the HSMCI_CMDR.

- **DCRCE: Data CRC Error**

0 = No error.

1 = A CRC16 error has been detected in the last data block. Cleared by reading in the HSMCI_SR register.

- **DTOE: Data Time-out Error**

0 = No error.

1 = The data time-out set by DTOCYC and DTOMUL in HSMCI_DTOR has been exceeded. Cleared by reading in the HSMCI_SR register.

- **CSTOE: Completion Signal Time-out Error**

0 = No error.

1 = The completion signal time-out set by CSTOCYC and CSTOMUL in HSMCI_CSTOR has been exceeded. Cleared by reading in the HSMCI_SR register. Cleared by reading in the HSMCI_SR register.

- **BLKOVRE: DMA Block Overrun Error**

0 = No error.

1 = A new block of data is received and the DMA controller has not started to move the current pending block, a block overrun is raised. Cleared by reading in the HSMCI_SR register.

- **DMADONE: DMA Transfer done**

0 = DMA buffer transfer has not completed since the last read of HSMCI_SR register.

1 = DMA buffer transfer has completed.

- **FIFOEMPTY: FIFO empty flag**

0 = FIFO contains at least one byte.

1 = FIFO is empty.

- **XFRDONE: Transfer Done flag**

0 = A transfer is in progress.

1 = Command register is ready to operate and the data bus is in the idle state.

- **ACKRCV: Boot Operation Acknowledge Received**

0 = No Boot acknowledge received since the last read of the status register.

1 = A Boot acknowledge signal has been received. Cleared by reading the HSMCI_SR register.

- **ACKRCVE: Boot Operation Acknowledge Error**

0 = No error

1 = Corrupted Boot Acknowledge signal received.

- **OVRE: Overrun**

0 = No error.

1 = At least one 8-bit received data has been lost (not read). Cleared when sending a new data transfer command.

When FERRCTRL in HSMCI_CFG is set to 1, OVRE becomes reset after read.

- **UNRE: Underrun**

0 = No error.

1 = At least one 8-bit data has been sent without valid information (not written). Cleared when sending a new data transfer command or when setting FERRCTRL in HSMCI_CFG to 1.

When FERRCTRL in HSMCI_CFG is set to 1, UNRE becomes reset after read.

36.13.13 HSMCI Interrupt Enable Register

Name: HSMCI_IER

Addresses: 0xFFF80044 (0), 0xFFFD0044 (1)

Access: Write-only

31	30	29	28	27	26	25	24
UNRE	OVRE	ACKRCVE	ACKRCV	XFRDONE	FIFOEMPTY	DMADONE	BLKOVRE
23	22	21	20	19	18	17	16
CSTOE	DTOE	DCRCE	RTOE	RENDE	RCRCE	RDIRE	RINDE
15	14	13	12	11	10	9	8
–	–	CSRCV	SDIOWAIT	–	–	–	MCI_SDIOIRQA
7	6	5	4	3	2	1	0
–	–	NOTBUSY	DTIP	BLKE	TXRDY	RXRDY	CMDRDY

- **CMDRDY: Command Ready Interrupt Enable**
- **RXRDY: Receiver Ready Interrupt Enable**
- **TXRDY: Transmit Ready Interrupt Enable**
- **BLKE: Data Block Ended Interrupt Enable**
- **DTIP: Data Transfer in Progress Interrupt Enable**
- **NOTBUSY: Data Not Busy Interrupt Enable**
- **SDIOIRQA: SDIO Interrupt for Slot A Interrupt Enable**
- **SDIOWAIT: SDIO Read Wait Operation Status Interrupt Enable**
- **CSRCV: Completion Signal Received Interrupt Enable**
- **RINDE: Response Index Error Interrupt Enable**
- **RDIRE: Response Direction Error Interrupt Enable**
- **RCRCE: Response CRC Error Interrupt Enable**
- **RENDE: Response End Bit Error Interrupt Enable**
- **RTOE: Response Time-out Error Interrupt Enable**
- **DCRCE: Data CRC Error Interrupt Enable**
- **DTOE: Data Time-out Error Interrupt Enable**
- **CSTOE: Completion Signal Timeout Error Interrupt Enable**
- **BLKOVRE: DMA Block Overrun Error Interrupt Enable**
- **DMADONE: DMA Transfer completed Interrupt Enable**

- **FIFOEMPTY: FIFO empty Interrupt enable**
- **XFRDONE: Transfer Done Interrupt enable**
- **ACKRCV: Boot Acknowledge Interrupt Enable**
- **ACKRCVE: Boot Acknowledge Error Interrupt Enable**
- **OVRE: Overrun Interrupt Enable**
- **UNRE: Underrun Interrupt Enable**

0 = No effect.

1 = Enables the corresponding interrupt.

36.13.14 HSMCI Interrupt Disable Register

Name: HSMCI_IDR

Addresses: 0xFFF80048 (0), 0xFFFD0048 (1)

Access: Write-only

31	30	29	28	27	26	25	24
UNRE	OVRE	ACKRCVE	ACKRCV	XFRDONE	FIFOEMPTY	DMADONE	BLKOVRE
23	22	21	20	19	18	17	16
CSTOE	DTOE	DCRCE	RTOE	RENDE	RCRCE	RDIRE	RINDE
15	14	13	12	11	10	9	8
–	–	CSRCV	SDIOWAIT	–	–	–	MCI_SDIOIRQA
7	6	5	4	3	2	1	0
–	–	NOTBUSY	DTIP	BLKE	TXRDY	RXRDY	CMDRDY

- **CMDRDY: Command Ready Interrupt Disable**
- **RXRDY: Receiver Ready Interrupt Disable**
- **TXRDY: Transmit Ready Interrupt Disable**
- **BLKE: Data Block Ended Interrupt Disable**
- **DTIP: Data Transfer in Progress Interrupt Disable**
- **NOTBUSY: Data Not Busy Interrupt Disable**
- **SDIOIRQA: SDIO Interrupt for Slot A Interrupt Disable**
- **SDIOWAIT: SDIO Read Wait Operation Status Interrupt Disable**
- **CSRCV: Completion Signal received interrupt disable**
- **RINDE: Response Index Error Interrupt Disable**
- **RDIRE: Response Direction Error Interrupt Disable**
- **RCRCE: Response CRC Error Interrupt Disable**
- **RENDE: Response End Bit Error Interrupt Disable**
- **RTOE: Response Time-out Error Interrupt Disable**
- **DCRCE: Data CRC Error Interrupt Disable**
- **DTOE: Data Time-out Error Interrupt Disable**
- **CSTOE: Completion Signal Time out Error Interrupt Disable**
- **BLKOVRE: DMA Block Overrun Error Interrupt Disable**
- **DMADONE: DMA Transfer completed Interrupt Disable**

- **FIFOEMPTY: FIFO empty Interrupt Disable**
- **XFRDONE: Transfer Done Interrupt Disable**
- **ACKRCV: Boot Acknowledge Interrupt Disable**
- **ACKRCVE: Boot Acknowledge Error Interrupt Disable**
- **OVRE: Overrun Interrupt Disable**
- **UNRE: Underrun Interrupt Disable**

0 = No effect.

1 = Disables the corresponding interrupt.

36.13.15 HSMCI Interrupt Mask Register

Name: HSMCI_IMR

Addresses: 0xFFF8004C (0), 0xFFFD004C (1)

Access: Read-only

31	30	29	28	27	26	25	24
UNRE	OVRE	ACKRCVE	ACKRCV	XFRDONE	FIFOEMPTY	DMADONE	BLKOVRE
23	22	21	20	19	18	17	16
CSTOE	DTOE	DCRCE	RTOE	RENDE	RCRCE	RDIRE	RINDE
15	14	13	12	11	10	9	8
–	–	CSRCV	SDIOWAIT	–	–	–	MCI_SDIOIRQA
7	6	5	4	3	2	1	0
–	–	NOTBUSY	DTIP	BLKE	TXRDY	RXRDY	CMDRDY

- **CMDRDY: Command Ready Interrupt Mask**
- **RXRDY: Receiver Ready Interrupt Mask**
- **TXRDY: Transmit Ready Interrupt Mask**
- **BLKE: Data Block Ended Interrupt Mask**
- **DTIP: Data Transfer in Progress Interrupt Mask**
- **NOTBUSY: Data Not Busy Interrupt Mask**
- **SDIOIRQA: SDIO Interrupt for Slot A Interrupt Mask**
- **SDIOWAIT: SDIO Read Wait Operation Status Interrupt Mask**
- **CSRCV: Completion Signal Received Interrupt Mask**
- **RINDE: Response Index Error Interrupt Mask**
- **RDIRE: Response Direction Error Interrupt Mask**
- **RCRCE: Response CRC Error Interrupt Mask**
- **RENDE: Response End Bit Error Interrupt Mask**
- **RTOE: Response Time-out Error Interrupt Mask**
- **DCRCE: Data CRC Error Interrupt Mask**
- **DTOE: Data Time-out Error Interrupt Mask**
- **CSTOE: Completion Signal Time-out Error Interrupt Mask**
- **BLKOVRE: DMA Block Overrun Error Interrupt Mask**
- **DMADONE: DMA Transfer Completed Interrupt Mask**

- **FIFOEMPTY: FIFO Empty Interrupt Mask**
- **XFRDONE: Transfer Done Interrupt Mask**
- **ACKRCV: Boot Operation Acknowledge Received Interrupt Mask**
- **ACKRCVE: Boot Operation Acknowledge Error Interrupt Mask**
- **OVRE: Overrun Interrupt Mask**
- **UNRE: Underrun Interrupt Mask**

0 = The corresponding interrupt is not enabled.

1 = The corresponding interrupt is enabled.

36.13.16 HSMCI DMA Configuration Register

Name: HSMCI_DMA

Addresses: 0xFFF80050 (0), 0xFFFD0050 (1)

Access: Read-write

31	30	29	28	27	26	25	24
		–	–	–	–	–	–
23	**22**	**21**	**20**	**19**	**18**	**17**	**16**
–	–	–	–	–	–	–	–
15	**14**	**13**	**12**	**11**	**10**	**9**	**8**
–	–	–	ROPT	–	–	–	DMAEN
7	**6**	**5**	**4**	**3**	**2**	**1**	**0**
–	–	CHKSIZE		–	–	OFFSET	

- **OFFSET: DMA Write Buffer Offset**

This field indicates the number of discarded bytes when the DMA writes the first word of the transfer.

- **CHKSIZE: DMA Channel Read and Write Chunk Size**

The CHKSIZE field indicates the number of data available when the DMA chunk transfer request is asserted.

CHKSIZE value	Number of data transferred
00	1
01	4
10	8
11	16

- **DMAEN: DMA Hardware Handshaking Enable**

0 = DMA interface is disabled.

1 = DMA Interface is enabled.

Note: To avoid unpredictable behavior, DMA hardware handshaking must be disabled when CPU transfers are performed.

- **ROPT: Read Optimization with padding**

0: BLKLEN bytes are moved from the Memory Card to the system memory, two DMA descriptors are used when the transfer size is not a multiple of 4.

1: Ceiling(BLKLEN/4) * 4 bytes are moved from the Memory Card to the system memory, only one DMA descriptor is used.

36.13.17 HSMCI Configuration Register

Name: HSMCI_CFG

Addresses: 0xFFF80054 (0), 0xFFFD0054 (1)

Access: Read-write

31	30	29	28	27	26	25	24
		–	–	–	–	–	–
23	**22**	**21**	**20**	**19**	**18**	**17**	**16**
–	–	–	–	–	–	–	–
15	**14**	**13**	**12**	**11**	**10**	**9**	**8**
–	–	–	LSYNC	–	–	–	HSMODE
7	**6**	**5**	**4**	**3**	**2**	**1**	**0**
–	–	–	FERRCTRL	–	–	–	FIFOMODE

- **FIFOMODE: HSMCI Internal FIFO control mode**

0 = A write transfer starts when a sufficient amount of data is written into the FIFO.

When the block length is greater than or equal to 3/4 of the HSMCI internal FIFO size, then the write transfer starts as soon as half the FIFO is filled. When the block length is greater than or equal to half the internal FIFO size, then the write transfer starts as soon as one quarter of the FIFO is filled. In other cases, the transfer starts as soon as the total amount of data is written in the internal FIFO.

1 = A write transfer starts as soon as one data is written into the FIFO.

- **FERRCTRL: Flow Error flag reset control mode**

0 = When an underflow/overflow condition flag is set, a new Write/Read command is needed to reset the flag.

1 = When an underflow/overflow condition flag is set, a read status resets the flag.

- **HSMODE: High Speed Mode**

0 = Default bus timing mode.

1 = If set to one, the host controller outputs command line and data lines on the rising edge of the card clock. The Host driver shall check the high speed support in the card registers.

- **LSYNC: Synchronize on the last block**

0 = The pending command is sent at the end of the current data block.

1 = The pending command is sent at the end of the block transfer when the transfer length is not infinite (block count shall be different from zero).

36.13.18 HSMCI Write Protect Mode Register

Name: HSMCI_WPMR

Addresses: 0xFFF800E4 (0), 0xFFFD00E4 (1)

Access: Read-write

31	30	29	28	27	26	25	24
WP_KEY (0x4D => “M”)							
23	22	21	20	19	18	17	16
WP_KEY (0x43 => C”)							
15	14	13	12	11	10	9	8
WP_KEY (0x49 => “I”)							
7	6	5	4	3	2	1	0
							WP_EN

- **WP_EN: Write Protection Enable**

0 = Disables the Write Protection if WP_KEY corresponds.

1 = Enables the Write Protection if WP_KEY corresponds.

- **WP_KEY: Write Protection Key password**

Should be written at value **0x4D4349** (ASCII code for “HSMCI”). Writing any other value in this field has no effect.

36.13.19 HSMCI Write Protect Status Register

Name: HSMCI_WPSR

Addresses: 0xFFF800E8 (0), 0xFFFD00E8 (1)

Access: Read-only

31	30	29	28	27	26	25	24
-	-	-	-	-	-	-	-
23	22	21	20	19	18	17	16
WP_VSRC							
15	14	13	12	11	10	9	8
WP_VSRC							
7	6	5	4	3	2	1	0
-	-	-	-	WP_VS			

- **WP_VSRC: Write Protection Violation Status**

				WP_VS
0	0	0	0	No Write Protection Violation occurred since the last read of this register (WP_SR)
0	0	0	1	Write Protection detected unauthorized attempt to write a control register had occurred (since the last read.)
0	0	1	0	Software reset had been performed while Write Protection was enabled (since the last read).
0	0	1	1	Both Write Protection violation and software reset with Write Protection enabled had occurred since the last read.
Other value				Reserved

- **WP_VSRC: Write Protection Violation SouRCe**

				WP_VSRC
0	0	0	0	No Write Protection Violation occurred since the last read of this register (WP_SR)
0	0	0	1	Write access in HSMCI_MR while Write Protection was enabled (since the last read).
0	0	1	0	Write access in HSMCI_DTOR while Write Protection was enabled (since the last read)
0	0	1	1	Write access in HSMCI_SDCR while Write Protection was enabled (since the last read)
0	1	0	0	Write access in HSMCI_CSTOR while Write Protection was enabled (since the last read)
0	1	0	1	Write access in HSMCI_DMA while Write Protection was enabled (since the last read)
0	1	1	0	Write access in HSMCI_CFG while Write Protection was enabled (since the last read)
Other value				Reserved

36.13.20 HSMCI FIFO Memory Aperture

Name: HSMCI_FIFO

Access: Read-write

31	30	29	28	27	26	25	24
DATA							
23	22	21	20	19	18	17	16
DATA							
15	14	13	12	11	10	9	8
DATA							
7	6	5	4	3	2	1	0
DATA							

- **DATA: Data to Read or Data to Write**

37. USB High Speed Host Port (UHPHS)

37.1 Description

The USB High Speed Host Port (UHPHS) interfaces the USB with the host application. It handles Open HCI protocol (Open Host Controller Interface) as well as Enhanced HCI protocol (Enhanced Host Controller Interface).

37.2 Embedded Characteristics

The AT91SAM9G45 features USB communication ports as follows:

- 2 Ports USB Host full speed OHCI and High speed EHCI
- 1 Device High speed

USB Host Port A is directly connected to the first UTMI transceiver.

The Host Port B is multiplexed with the USB device High speed and connected to the second UTMI port. The selection between Host Port B and USB device high speed is controlled by a the UDPHS enable bit located in the UDPHS_CTRL control register.

Figure 37-1. USB Selection

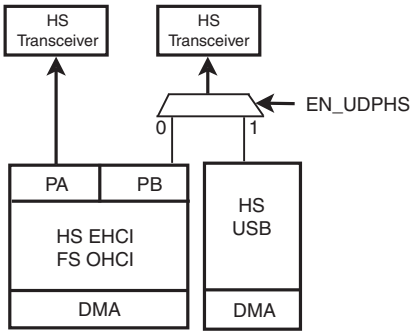

- Compliant with Enhanced HCI Rev 1.0 Specification
  - Compliant with USB V2.0 High-speed and Full-speed Specification
  - Supports Both High-speed 480Mbps and Full-speed 12 Mbps USB devices
- Compliant with Open HCI Rev 1.0 Specification
  - Compliant with USB V2.0 Full-speed and Low-speed Specification
  - Supports Both Low-speed 1.5 Mbps and Full-speed 12 Mbps USB devices
- Root Hub Integrated with 2 Downstream USB Ports
- Shared Embedded USB Transceivers

37.2.1 EHCI

The USB Host Port controller is fully compliant with the Enhanced HCI specification. The USB Host Port User Interface (registers description) can be found in the Enhanced HCI Rev 1.0 Specification available on http://www.intel.com/technology/usb/ehcispec.htm. The standard EHCI USB stack driver can be easily ported to Atmel's architecture in the same way all existing class drivers run, without hardware specialization.

37.2.2 OHCI

The USB Host Port integrates a root hub and transceivers on downstream ports. It provides several Full-speed half-duplex serial communication ports at a baud rate of 12 Mbit/s. Up to 127 USB devices (printer, camera, mouse, keyboard, disk, etc.) and the USB hub can be connected to the USB host in the USB "tiered star" topology.

The USB Host Port controller is fully compliant with the Open HCI specification. The USB Host Port User Interface (registers description) can be found in the Open HCI Rev 1.0 Specification available on http://h18000.www1.hp.com/productinfo/development/openhci.html. The standard OHCI USB stack driver can be easily ported to Atmel's architecture, in the same way all existing class drivers run without hardware specialization.

This means that all standard class devices are automatically detected and available to the user's application. As an example, integrating an HID (Human Interface Device) class driver provides a plug & play feature for all USB keyboards and mouses.

37.3 Block Diagram

Figure 37-2. Block Diagram

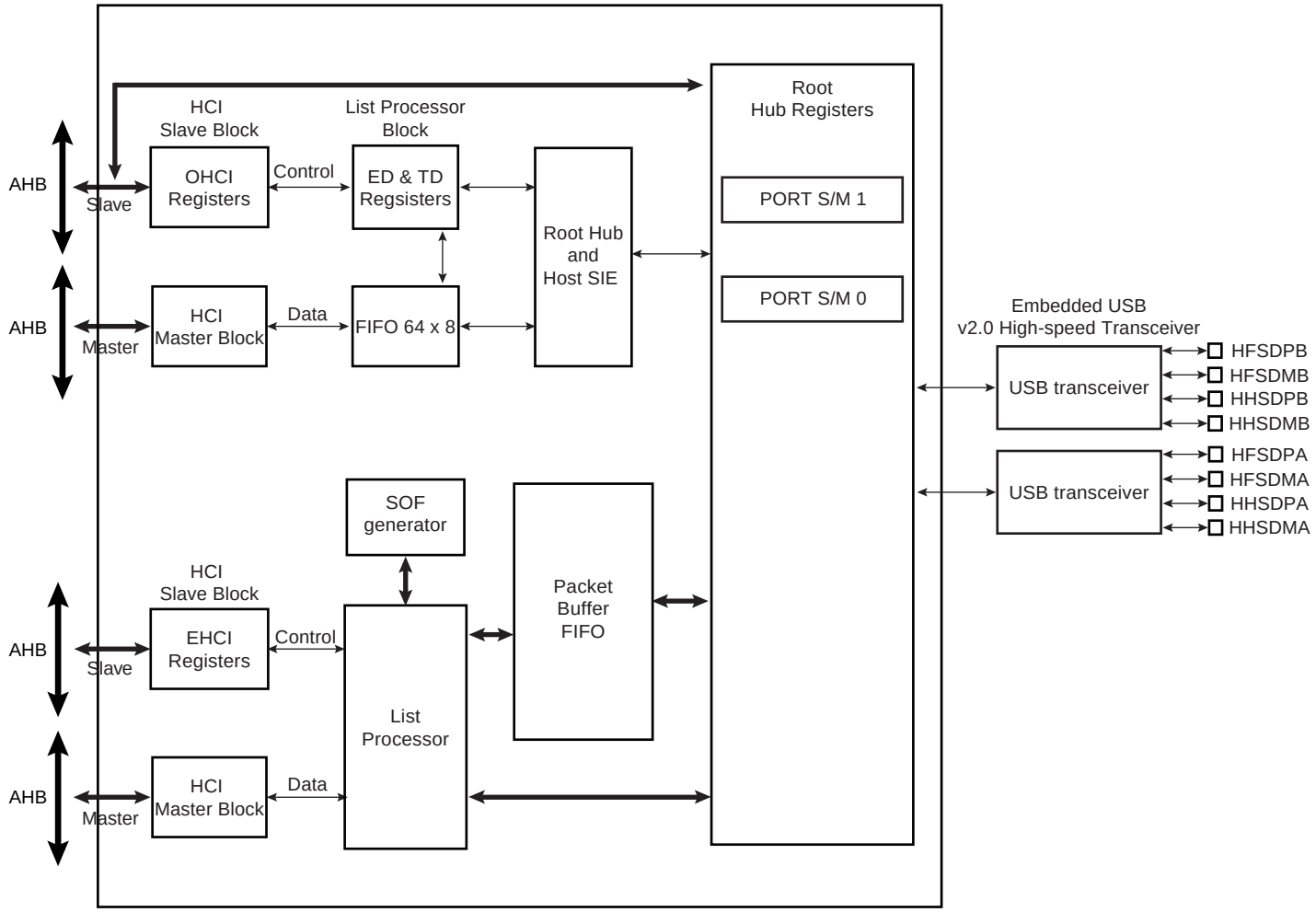

Access to the USB host operational registers is achieved through the AHB bus slave interface. The Open HCI host controller and Enhanced HCI host controller initialize master DMA transfers through the AHB bus master interface as follows:

- Fetches endpoint descriptors and transfer descriptors
- Access to endpoint data from system memory
- Access to the HC communication area
- Write status and retire transfer descriptor

Memory access errors (abort, misalignment) lead to an “Unrecoverable Error” indicated by the corresponding flag in the host controller operational registers.

The USB root hub is integrated in the USB host. Several USB downstream ports are available. The number of downstream ports can be determined by the software driver reading the root hub’s operational registers. Device connection is automatically detected by the USB host port logic.

USB physical transceivers are integrated in the product and driven by the root hub’s ports.

Over current protection on ports can be activated by the USB host controller. Atmel’s standard product does not dedicate pads to external over current protection.

37.4 Product Dependencies

37.4.1 I/O Lines

HFSDPs, HFSDMs, HHSDPs and HHSDMs are not controlled by any PIO controllers. The embedded USB High Speed physical transceivers are controlled by the USB host controller.

37.5 I/O Lines

HFSDPs, HFSDMs, HHSDPs and HHSDMs are not controlled by any PIO controllers. The embedded USB High Speed physical transceivers are controlled by the USB host controller.

One transceiver is shared with USB Device (UDP) High Speed. In this case USB Host High Speed Controller uses only Port A, ie, the signals HFSDPA, HFSDMA, HHSDPA and HHSDMA.

The port B is driven by the UDP High Speed, the output signals are DFSDP, DFSDM, DHSDP and DHSDM.

The transceiver is automatically selected for Device operation once the UDP High Speed is enabled.

37.5.1 Power Management

The USB Host High Speed requires a 48 MHz clock for the embedded High-speed transceivers. This clock is provided by the UTMI PLL, it is UPLLCK.

In case power consumption is saved by stopping the UTMI PLL, high-speed operations are not possible. Nevertheless, OHCI Full-speed operations remain possible by selecting PLLACK as the input clock of OHCI.

The High-speed transceiver returns a 30 MHz clock to the USB Host controller.

The USB Host controller requires 48 MHz and 12 MHz clocks for OHCI full-speed operations. These clocks must be generated by a PLL with a correct accuracy of ± 0.25% thanks to USBDIV field.

Thus the USB Host peripheral receives three clocks from the Power Management Controller (PMC): the Peripheral Clock (MCK domain), the UHP48M and the UHP12M (built-in UHP48M divided by four) used by the OHCI to interface with the bus USB signals (Recovered 12 MHz domain) in Full-speed operations.

For High-speed operations, the user has to perform the following:

- Enable UHP peripheral clock, bit (1 << AT91C_ID_UHPHS) in PMC_PCER register.
- Write CKGR_PLLCOUNT field in PMC_UCKR register.
- Enable UPLL, bit AT91C_CKGR_UPLLEN in PMC_UCKR register.
- Wait until UTMI_PLL is locked. LOCKU bit in PMC_SR register
- Enable BIAS, bit AT91C_CKGR_BIASEN in PMC_UCKR register.
- Select UPLLCK as Input clock of OHCI part, USBS bit in PMC_USB register.
- Program the OHCI clocks (UHP48M and UHP12M) with USBDIV field in PMC_USB register. USBDIV must be 9 (division by 10) if UPLLCK is selected.
- Enable OHCI clocks, UHP bit in PMC_SCER register.

For OHCI Full-speed operations only, the user has to perform the following:

- Enable UHP peripheral clock, bit (1 << AT91C_ID_UHPHS) in PMC_PCER register.
- Select PLLACK as Input clock of OHCI part, USBS bit in PMC_USB register.
- Program the OHCI clocks (UHP48M and UHP12M) with USBDIV field in PMC_USB register. USBDIV value is to calculated regarding the PLLACK value and USB Full-speed accuracy.
- Enable the OHCI clocks, UHP bit in PMC_SCER register.

Figure 37-3. UHP Clock trees

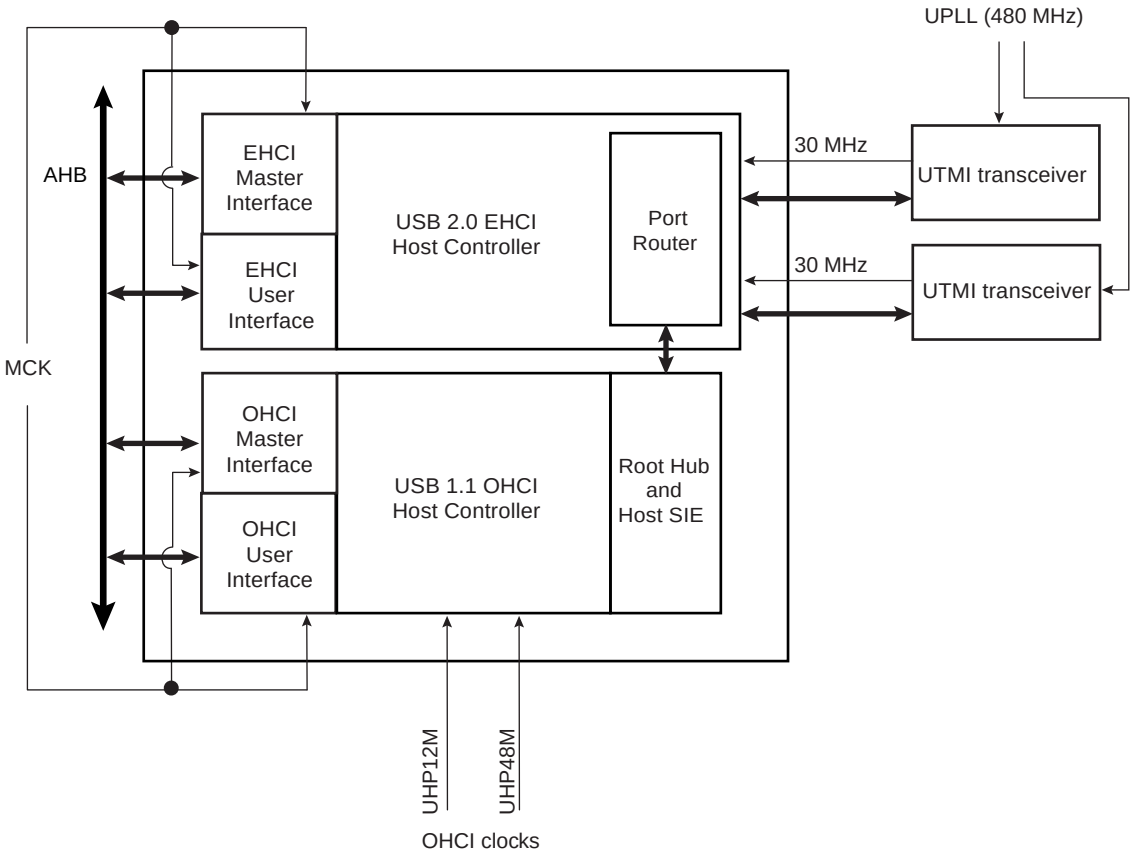

37.5.2 Interrupt

The USB host interface has an interrupt line connected to the Advanced Interrupt Controller (AIC).

Handling USB host interrupts requires programming the AIC before configuring the UHP HS.

37.6 Typical Connection

Figure 37-4. Board Schematic to Interface UHP High-speed Device Controller

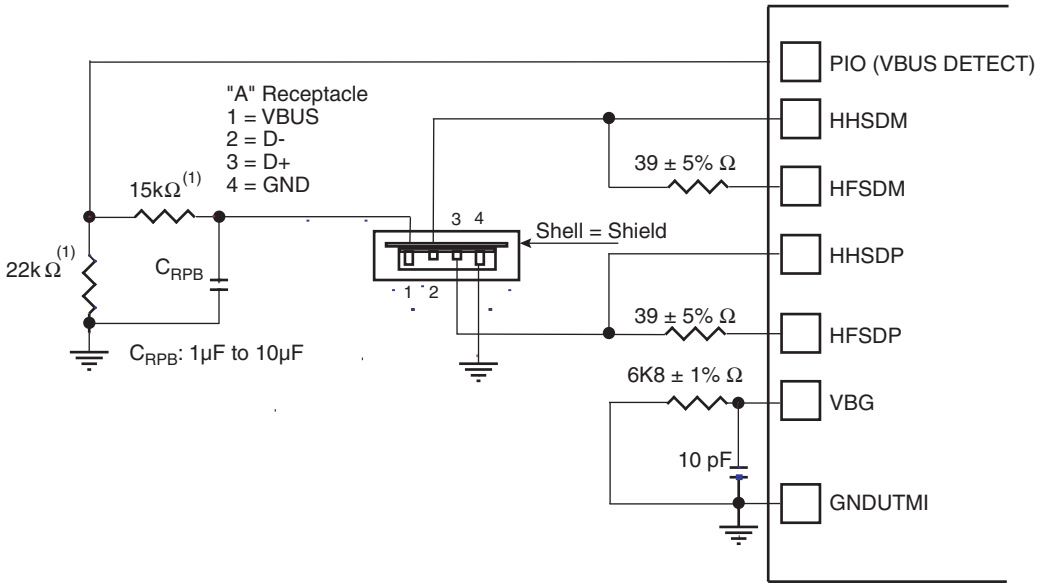

Note: 1. The values shown on the 22k Ω and 15k Ω resistors are only valid for 3v3 supplied PIOs.

38. USB High Speed Device Port (UDPHS)

38.1 Description

The USB High Speed Device Port (UDPHS) is compliant with the Universal Serial Bus (USB), rev 2.0 High Speed device specification.

Each endpoint can be configured in one of several USB transfer types. It can be associated with one, two or three banks of a dual-port RAM used to store the current data payload. If two or three banks are used, one DPR bank is read or written by the processor, while the other is read or written by the USB device peripheral. This feature is mandatory for isochronous endpoints.

38.2 Embedded Characteristics

The device features USB communication ports as follows:

- 2 Ports USB Host full speed OHCI and High speed EHCI
- 1 Device High speed

USB Host Port A is directly connected to the first UTMI transceiver.

The Host Port B is multiplexed with the USB device High speed and connected to the second UTMI port. The selection between Host Port B and USB device high speed is controlled by a the UDPHS enable bit located in the UDPHS_CTRL control register.

Figure 38-1. USB Selection

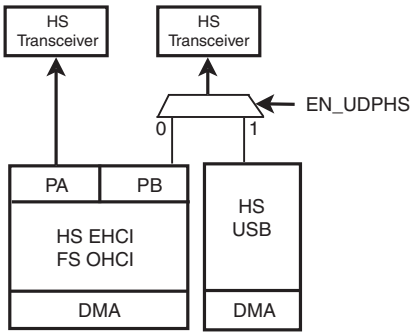

- USB V2.0 high-speed compliant, 480 MBits per second
- Embedded USB V2.0 UTMI+ high-speed transceiver shared with UHP HS.
- Embedded 4-Kbyte dual-port RAM for endpoints
- Embedded 6 channels DMA controller
- Suspend/Resume logic
- Up to 2 or 3 banks for isochronous and bulk endpoints
- Seven endpoints:
  - Endpoint 0: 64 bytes, 1 bank mode
  - Endpoint 1 & 2: 1024 bytes, 2 banks mode, High Bandwidth, DMA
  - Endpoint 3 & 4: 1024 bytes, 3 banks mode, DMA
  - Endpoint 5 & 6: 1024 bytes, 3 banks mode, High Bandwidth, DMA

Table 38-1. UDPHS Endpoint Description

Endpoint #	Mnemonic	Nb Bank	DMA	High BandWidth	Max. Endpoint Size	Endpoint Type
0	EPT_0	1	N	N	64	Control
1	EPT_1	2	Y	Y	1024	Ctrl/Bulk/Iso[(1)]/Interrupt
2	EPT_2	2	Y	Y	1024	Ctrl/Bulk/Iso[(1)]/Interrupt
3	EPT_3	3	Y	N	1024	Ctrl/Bulk/Iso[(1)]/Interrupt
4	EPT_4	3	Y	N	1024	Ctrl/Bulk/Iso[(1)]/Interrupt
5	EPT_5	3	Y	Y	1024	Ctrl/Bulk/Iso[(1)]/Interrupt
6	EPT_6	3	Y	Y	1024	Ctrl/Bulk/Iso[(1)]/Interrupt

Note: 1. In Isochronous Mode (Iso), it is preferable that High Band Width capability is available.

The size of internal DPRAM is 4 Kbyte.

Suspend and resume are automatically detected by the UDPHS device, which notifies the processor by raising an interrupt.

38.3 Block Diagram

Figure 38-2. Block Diagram

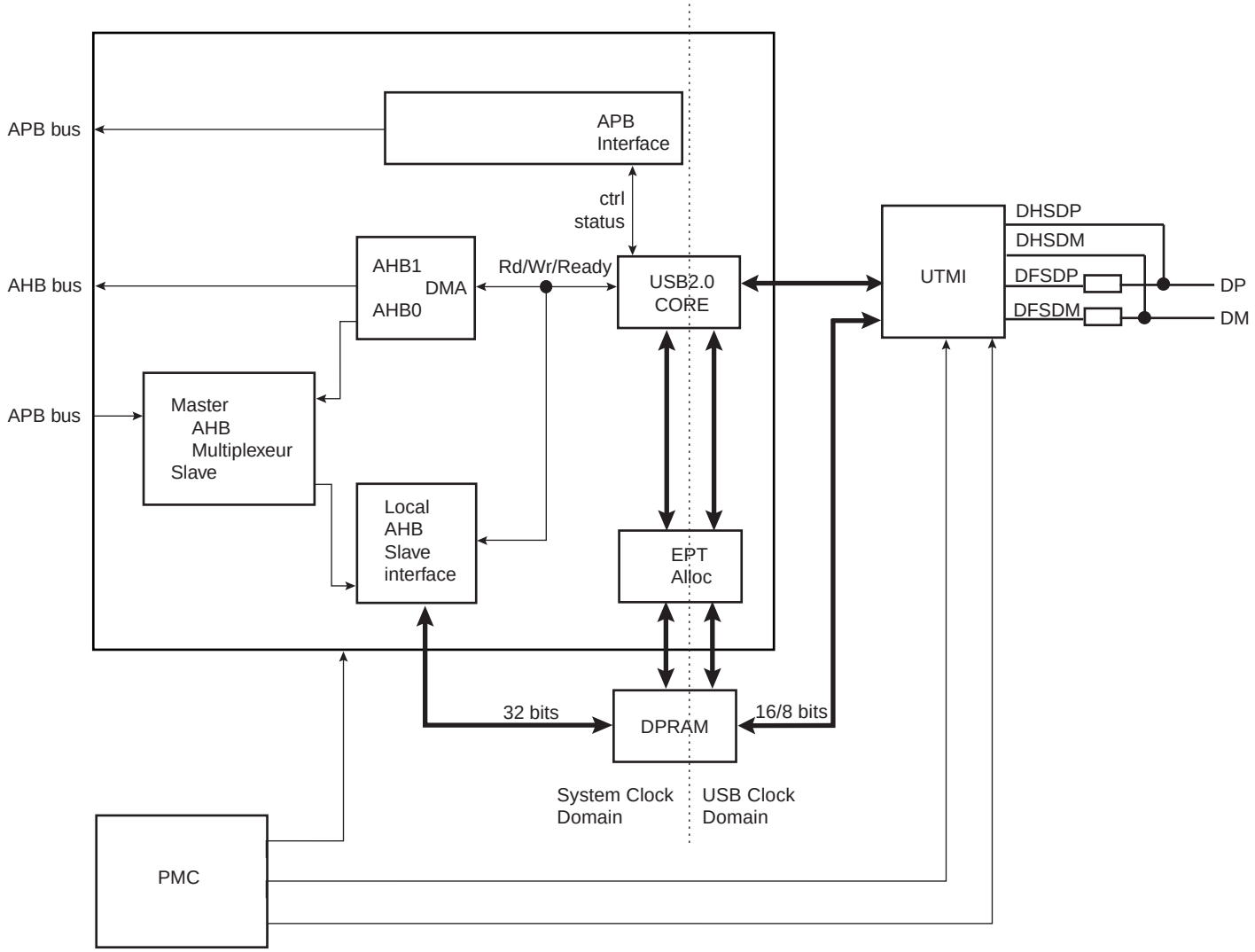

Notes: 1. System clock, bit (1 << AT91C_ID_UDPHS) in PMC_PCER register.
2. Enable UDPHS clock (peripheral clock) bit AT91C_CKGR_UPLLEN in PMC_UCKR register.
3. Enable BIAS bit AT91C_CKGR_BIASEN in PMC_UCKR register.

38.4 Typical Connection

Figure 38-3. Board Schematic

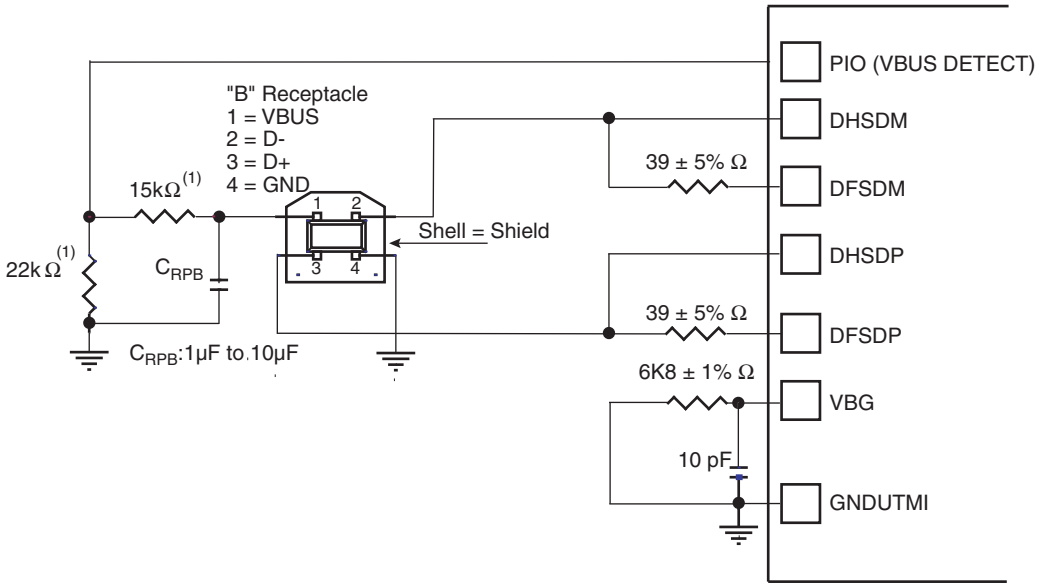

Notes: 1. The values shown on the 22kΩ and 15kΩ resistors are only valid with 3V3 supplied PIOs.

38.5 Functional Description

38.5.1 USB V2.0 High Speed Device Port Introduction

The USB V2.0 High Speed Device Port provides communication services between host and attached USB devices. Each device is offered with a collection of communication flows (pipes) associated with each endpoint. Software on the host communicates with a USB Device through a set of communication flows.

38.5.2 USB V2.0 High Speed Transfer Types

A communication flow is carried over one of four transfer types defined by the USB device.

A device provides several logical communication pipes with the host. To each logical pipe is associated an endpoint. Transfer through a pipe belongs to one of the four transfer types:

- Control Transfers: Used to configure a device at attach time and can be used for other device-specific purposes, including control of other pipes on the device.
- Bulk Data Transfers: Generated or consumed in relatively large burst quantities and have wide dynamic latitude in transmission constraints.
- Interrupt Data Transfers: Used for timely but reliable delivery of data, for example, characters or coordinates with human-perceptible echo or feedback response characteristics.
- Isochronous Data Transfers: Occupy a prenegotiated amount of USB bandwidth with a prenegotiated delivery latency. (Also called streaming real time transfers.)

As indicated below, transfers are sequential events carried out on the USB bus.

Endpoints must be configured according to the transfer type they handle.

Table 38-2. USB Communication Flow

Transfer	Direction	Bandwidth	Endpoint Size	Error Detection	Retrying
Control	Bidirectional	Not guaranteed	8,16,32,64	Yes	Automatic
Isochronous	Unidirectional	Guaranteed	8-1024	Yes	No
Interrupt	Unidirectional	Not guaranteed	8-1024	Yes	Yes
Bulk	Unidirectional	Not guaranteed	8-512	Yes	Yes

38.5.3 USB Transfer Event Definitions

A transfer is composed of one or several transactions;

Table 38-3. USB Transfer Events

CONTROL (bidirectional)	Control Transfers [(1)]	• Setup transaction → Data IN transactions →Status OUT transaction • Setup transaction → Data OUT transactions →Status IN transaction • Setup transaction → Status IN transaction
IN (device toward host)	Bulk IN Transfer	• Data IN transaction → Data IN transaction
	Interrupt IN Transfer	• Data IN transaction → Data IN transaction
	Isochronous IN Transfer [(2)]	• Data IN transaction → Data IN transaction
OUT (host toward device)	Bulk OUT Transfer	• Data OUT transaction → Data OUT transaction
	Interrupt OUT Transfer	• Data OUT transaction → Data OUT transaction
	Isochronous OUT Transfer [(2)]	• Data OUT transaction → Data OUT transaction

Notes: 1. Control transfer must use endpoints with one bank and can be aborted using a stall handshake.
2. Isochronous transfers must use endpoints configured with two or three banks.

An endpoint handles all transactions related to the type of transfer for which it has been configured.

38.5.4 USB V2.0 High Speed BUS Transactions

Each transfer results in one or more transactions over the USB bus.

There are five kinds of transactions flowing across the bus in packets:

1. Setup Transaction
2. Data IN Transaction
3. Data OUT Transaction
4. Status IN Transaction
5. Status OUT Transaction

Figure 38-4. Control Read and Write Sequences

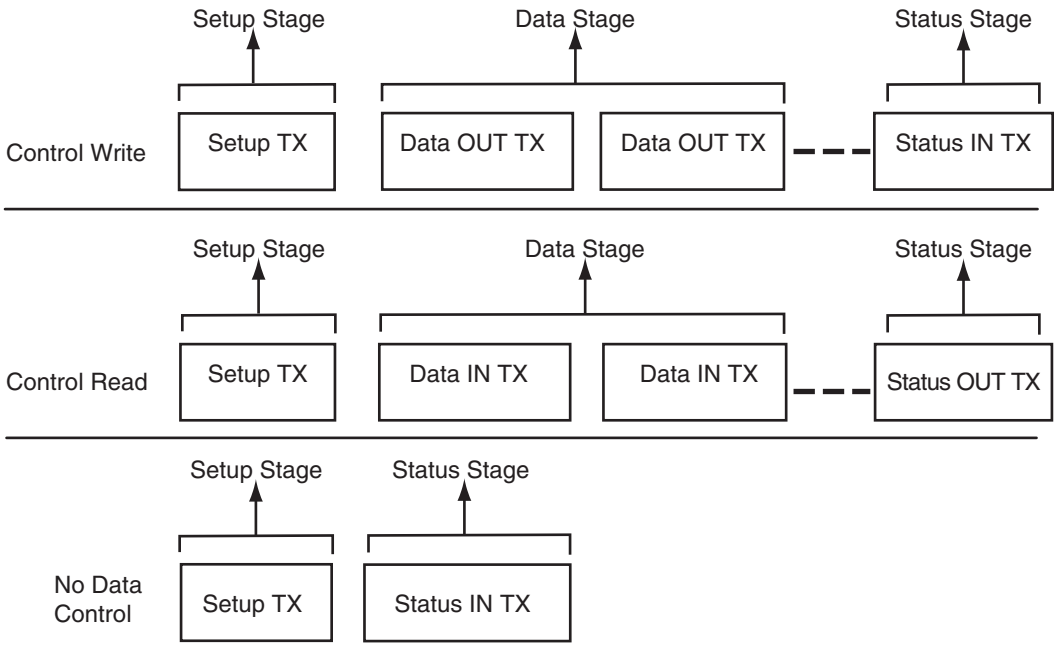

A status IN or OUT transaction is identical to a data IN or OUT transaction.

38.5.5 Endpoint Configuration

The endpoint 0 is always a control endpoint, it must be programmed and active in order to be enabled when the End Of Reset interrupt occurs.

To configure the endpoints:

- Fill the configuration register (UDPHS_EPTCFG) with the endpoint size, direction (IN or OUT), type (CTRL, Bulk, IT, ISO) and the number of banks.
- Fill the number of transactions (NB_TRANS) for isochronous endpoints.

Note: For control endpoints the direction has no effect.

- Verify that the EPT_MAPD flag is set. This flag is set if the endpoint size and the number of banks are correct compared to the FIFO maximum capacity and the maximum number of allowed banks.

- Configure control flags of the endpoint and enable it in UDPHS_EPTCTLENBx according to "UDPHS Endpoint Control Register" on page 839.

Control endpoints can generate interrupts and use only 1 bank.

All endpoints (except endpoint 0) can be configured either as Bulk, Interrupt or Isochronous. See Table 38-1. UDPHS Endpoint Description.

The maximum packet size they can accept corresponds to the maximum endpoint size.

Note: The endpoint size of 1024 is reserved for isochronous endpoints.

The size of the DPRAM is 4 Kbyte. The DPR is shared by all active endpoints. The memory size required by the active endpoints must not exceed the size of the DPRAM.

SIZE_DPRAM = SIZE _EPT0

+ NB_BANK_EPT1 x SIZE_EPT1

+ NB_BANK_EPT2 x SIZE_EPT2

+ NB_BANK_EPT3 x SIZE_EPT3

+ NB_BANK_EPT4 x SIZE_EPT4

+ NB_BANK_EPT5 x SIZE_EPT5

+ NB_BANK_EPT6 x SIZE_EPT6

+... (refer to 38.6.11 UDPHS Endpoint Configuration Register)

If a user tries to configure endpoints with a size the sum of which is greater than the DPRAM, then the EPT_MAPD is not set.

The application has access to the physical block of DPR reserved for the endpoint through a 64 Kbyte logical address space.

The physical block of DPR allocated for the endpoint is remapped all along the 64 Kbyte logical address space. The application can write a 64 Kbyte buffer linearly.

Figure 38-5. Logical Address Space for DPR Access:

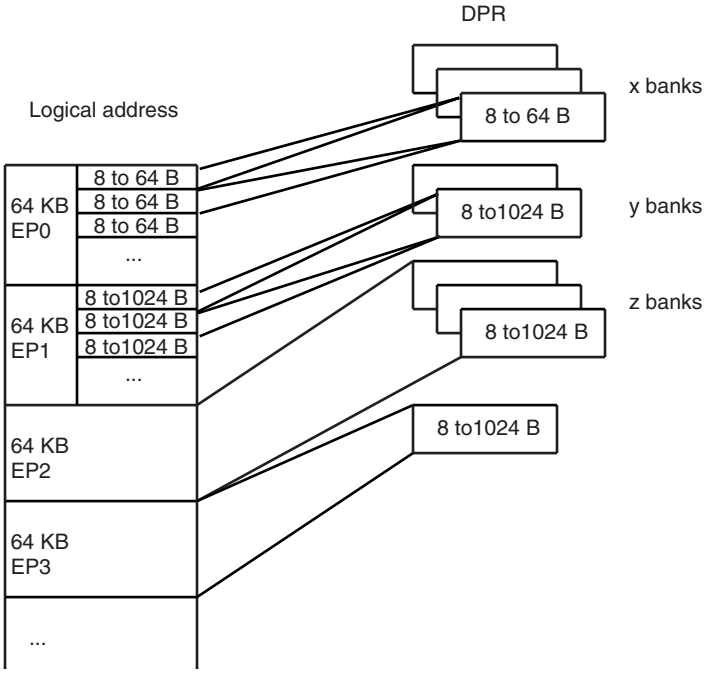

Configuration examples of UDPHS_EPTCTLx (UDPHS Endpoint Control Register) for Bulk IN endpoint type follow below.

- With DMA
  - AUTO_VALID: Automatically validate the packet and switch to the next bank.
  - EPT_ENABL: Enable endpoint.

- Without DMA:
  - TX_BK_RDY: An interrupt is generated after each transmission.
  - EPT_ENABL: Enable endpoint.

Configuration examples of Bulk OUT endpoint type follow below.

- With DMA
  - AUTO_VALID: Automatically validate the packet and switch to the next bank.
  - EPT_ENABL: Enable endpoint.
- Without DMA
  - RX_BK_RDY: An interrupt is sent after a new packet has been stored in the endpoint FIFO.
  - EPT_ENABL: Enable endpoint.

38.5.6 Transfer With DMA

USB packets of any length may be transferred when required by the UDPHS Device. These transfers always feature sequential addressing.

Packet data AHB bursts may be locked on a DMA buffer basis for drastic overall AHB bus bandwidth performance boost with paged memories. These clock-cycle consuming memory row (or bank) changes will then likely not occur, or occur only once instead of dozens times, during a single big USB packet DMA transfer in case another AHB master addresses the memory. This means up to 128-word single-cycle unbroken AHB bursts for Bulk endpoints and 256-word single-cycle unbroken bursts for isochronous endpoints. This maximum burst length is then controlled by the lowest programmed USB endpoint size (EPT_SIZE bit in the UDPHS_EPTCFGx register) and DMA Size (BUFF_LENGTH bit in the UDPHS_DMACONTROLx register).

The USB 2.0 device average throughput may be up to nearly 60 MBytes. Its internal slave average access latency decreases as burst length increases due to the 0 wait-state side effect of unchanged endpoints. If at least 0 wait-state word burst capability is also provided by the external DMA AHB bus slaves, each of both DMA AHB busses need less than 50% bandwidth allocation for full USB 2.0 bandwidth usage at 30 MHz, and less than 25% at 60 MHz.

The UDPHS DMA Channel Transfer Descriptor is described in "UDPHS DMA Channel Transfer Descriptor" on page 850.

Note: In case of debug, be careful to address the DMA to an SRAM address even if a remap is done.

Figure 38-6. Example of DMA Chained List:

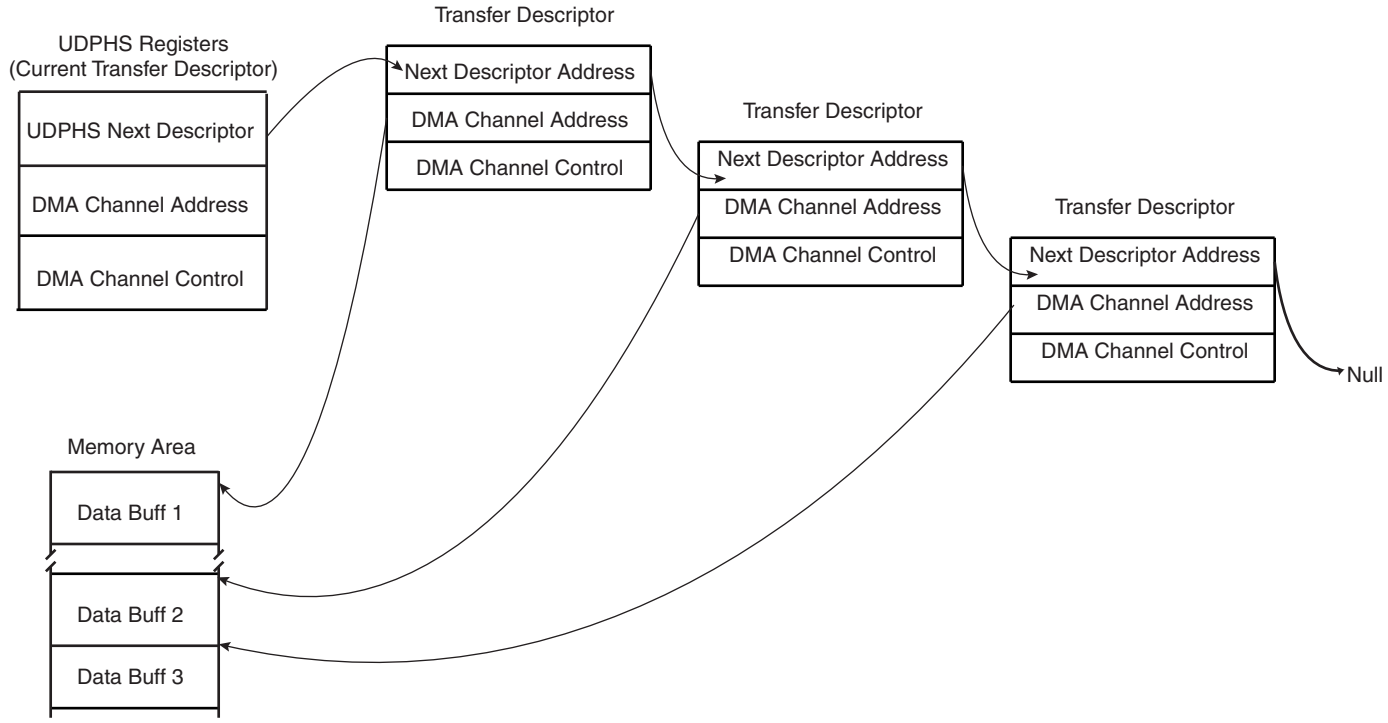

38.5.7 Transfer Without DMA

Important. If the DMA is not to be used, it is necessary that it be disabled because otherwise it can be enabled by previous versions of software **without warning**. If this should occur, the DMA can process data before an interrupt without knowledge of the user.

The recommended means to disable DMA is as follows:

```
// Reset IP UDPHS
    AT91C_BASE_UDPHS->UDPHS_CTRL &= ~AT91C_UDPHS_EN_UDPHS;
    AT91C_BASE_UDPHS->UDPHS_CTRL |= AT91C_UDPHS_EN_UDPHS;
// With OR without DMA !!!
    for( i=1; i<=((AT91C_BASE_UDPHS->UDPHS_IPFEATURES &
AT91C_UDPHS_DMA_CHANNEL_NBR)>>4); i++ ) {
// RESET endpoint canal DMA:
        // DMA stop channel command
        AT91C_BASE_UDPHS->UDPHS_DMA[i].UDPHS_DMACONTROL = 0;  // STOP
command
// Disable endpoint
        AT91C_BASE_UDPHS->UDPHS_EPT[i].UDPHS_EPTCTLDIS |= 0XFFFFFFFF;
// Reset endpoint config
        AT91C_BASE_UDPHS->UDPHS_EPT[i].UDPHS_EPTCTLCFG = 0;
// Reset DMA channel (Buff count and Control field)
        AT91C_BASE_UDPHS->UDPHS_DMA[i].UDPHS_DMACONTROL = 0x02;  // NON
STOP command
// Reset DMA channel 0 (STOP)
        AT91C_BASE_UDPHS->UDPHS_DMA[i].UDPHS_DMACONTROL = 0;  // STOP
command
// Clear DMA channel status (read the register for clear it)
        AT91C_BASE_UDPHS->UDPHS_DMA[i].UDPHS_DMASTATUS =
AT91C_BASE_UDPHS->UDPHS_DMA[i].UDPHS_DMASTATUS;
}
```

38.5.8 Handling Transactions with USB V2.0 Device Peripheral

38.5.8.1 Setup Transaction

The setup packet is valid in the DPR while RX_SETUP is set. Once RX_SETUP is cleared by the application, the UDPHS accepts the next packets sent over the device endpoint.

When a valid setup packet is accepted by the UDPHS:

- the UDPHS device automatically acknowledges the setup packet (sends an ACK response)
- payload data is written in the endpoint
- sets the RX_SETUP interrupt
- the BYTE_COUNT field in the UDPHS_EPTSTAx register is updated

An endpoint interrupt is generated while RX_SETUP in the UDPHS_EPTSTAx register is not cleared. This interrupt is carried out to the microcontroller if interrupts are enabled for this endpoint.

Thus, firmware must detect RX_SETUP polling UDPHS_EPTSTAx or catching an interrupt, read the setup packet in the FIFO, then clear the RX_SETUP bit in the UDPHS_EPTCLRSTA register to acknowledge the setup stage.

If STALL_SNT was set to 1, then this bit is automatically reset when a setup token is detected by the device. Then, the device still accepts the setup stage. (See Section 38.5.8.15 “STALL” on page 811).

38.5.8.2 NYET

NYET is a High Speed only handshake. It is returned by a High Speed endpoint as part of the PING protocol.

High Speed devices must support an improved NAK mechanism for Bulk OUT and control endpoints (except setup stage). This mechanism allows the device to tell the host whether it has sufficient endpoint space for the next OUT transfer (see USB 2.0 spec 8.5.1 NAK Limiting via Ping Flow Control).

The NYET/ACK response to a High Speed Bulk OUT transfer and the PING response are automatically handled by hardware in the UDPHS_EPTCTLx register (except when the user wants to force a NAK response by using the NYET_DIS bit).

If the endpoint responds instead to the OUT/DATA transaction with an NYET handshake, this means that the endpoint accepted the data but does not have room for another data payload. The host controller must return to using a PING token until the endpoint indicates it has space available.

Figure 38-7. NYET Example with Two Endpoint Banks

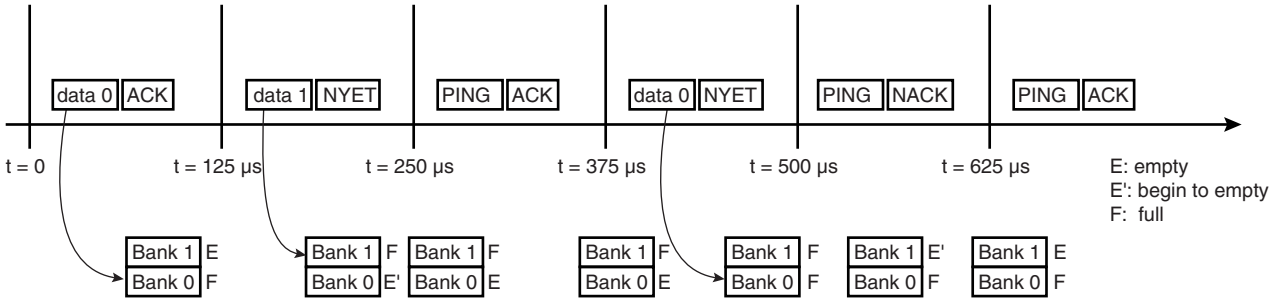

38.5.8.3 *Data IN*

38.5.8.4 *Bulk IN or Interrupt IN*

Data IN packets are sent by the device during the data or the status stage of a control transfer or during an (interrupt/bulk/isochronous) IN transfer. Data buffers are sent packet by packet under the control of the application or under the control of the DMA channel.

There are three ways for an application to transfer a buffer in several packets over the USB:

- packet by packet (see 38.5.8.5 below)
- 64 Kbyte (see 38.5.8.5 below)
- DMA (see 38.5.8.6 below)

38.5.8.5 *Bulk IN or Interrupt IN: Sending a Packet Under Application Control (Device to Host)*

The application can write one or several banks.

A simple algorithm can be used by the application to send packets regardless of the number of banks associated to the endpoint.

Algorithm Description for Each Packet:

- The application waits for TX_PK_RDY flag to be cleared in the UDPHS_EPTSTAx register before it can perform a write access to the DPR.
- The application writes one USB packet of data in the DPR through the 64 Kbyte endpoint logical memory window.
- The application sets TX_PK_RDY flag in the UDPHS_EPTSETSTAx register.

The application is notified that it is possible to write a new packet to the DPR by the TX_PK_RDY interrupt. This interrupt can be enabled or masked by setting the TX_PK_RDY bit in the UDPHS_EPTCTLENB/UDPHS_EPTCTLDIS register.

Algorithm Description to Fill Several Packets:

Using the previous algorithm, the application is interrupted for each packet. It is possible to reduce the application overhead by writing linearly several banks at the same time. The AUTO_VALID bit in the UDPHS_EPTCTLx must be set by writing the AUTO_VALID bit in the UDPHS_EPTCTLENBx register.

The auto-valid-bank mechanism allows the transfer of data (IN and OUT) without the intervention of the CPU. This means that bank validation (set TX_PK_RDY or clear the RX_BK_RDY bit) is done by hardware.

- The application checks the BUSY_BANK_STA field in the UDPHS_EPTSTAx register. The application must wait that at least one bank is free.
- The application writes a number of bytes inferior to the number of free DPR banks for the endpoint. Each time the application writes the last byte of a bank, the TX_PK_RDY signal is automatically set by the UDPHS.
- If the last packet is incomplete (i.e., the last byte of the bank has not been written) the application must set the TX_PK_RDY bit in the UDPHS_EPTSETSTAx register.

The application is notified that all banks are free, so that it is possible to write another burst of packets by the BUSY_BANK interrupt. This interrupt can be enabled or masked by setting the BUSY_BANK flag in the UDPHS_EPTCTLENB and UDPHS_EPTCTLDIS registers.

This algorithm must not be used for isochronous transfer. In this case, the ping-pong mechanism does not operate.

A Zero Length Packet can be sent by setting just the TX_PKTRDY flag in the UDPHS_EPTSETSTAx register.

38.5.8.6 Bulk IN or Interrupt IN: Sending a Buffer Using DMA (Device to Host)

The UDPHS integrates a DMA host controller. This DMA controller can be used to transfer a buffer from the memory to the DPR or from the DPR to the processor memory under the UDPHS control. The DMA can be used for all transfer types except control transfer.

Example DMA configuration:

1. Program UDPHS_DMAADDRESS x with the address of the buffer that should be transferred.
2. Enable the interrupt of the DMA in UDPHS_IEN
3. Program UDPHS_ DMACONTROLx:
   - Size of buffer to send: size of the buffer to be sent to the host.
   - END_B_EN: The endpoint can validate the packet (according to the values programmed in the AUTO_VALID and SHRT_PCKT fields of UDPHS_EPTCTLx.) (See “UDPHS Endpoint Control Register” on page 839 and Figure 38-12. Autovalid with DMA)
   - END_BUFFIT: generate an interrupt when the BUFF_COUNT in UDPHS_DMASTATUSx reaches 0.
   - CHANN_ENB: Run and stop at end of buffer

The auto-valid-bank mechanism allows the transfer of data (IN & OUT) without the intervention of the CPU. This means that bank validation (set TX_PK_RDY or clear the RX_BK_RDY bit) is done by hardware.

A transfer descriptor can be used. Instead of programming the register directly, a descriptor should be programmed and the address of this descriptor is then given to UDPHS_DMANXTDSC to be processed after setting the LDNXT_DSC field (Load Next Descriptor Now) in UDPHS_DMACONTROLx register.

The structure that defines this transfer descriptor must be aligned.

Each buffer to be transferred must be described by a DMA Transfer descriptor (see “UDPHS DMA Channel Transfer Descriptor” on page 850). Transfer descriptors are chained. Before executing transfer of the buffer, the UDPHS

may fetch a new transfer descriptor from the memory address pointed by the UDPHS_DMANXTDSCx register. Once the transfer is complete, the transfer status is updated in the UDPHS_DMASTATUSx register.

To chain a new transfer descriptor with the current DMA transfer, the DMA channel must be stopped. To do so, INTDIS_DMA and TX_BK_RDY may be set in the UDPHS_EPTCTLENBx register. It is also possible for the application to wait for the completion of all transfers. In this case the LDNXT_DSC field in the last transfer descriptor UDPHS_DMACONTROLx register must be set to 0 and CHANN_ENB set to 1.

Then the application can chain a new transfer descriptor.

The INTDIS_DMA can be used to stop the current DMA transfer if an enabled interrupt is triggered. This can be used to stop DMA transfers in case of errors.

The application can be notified at the end of any buffer transfer (ENB_BUFFIT bit in the UDPHS_DMACONTROLx register).

Figure 38-8. Data IN Transfer for Endpoint with One Bank

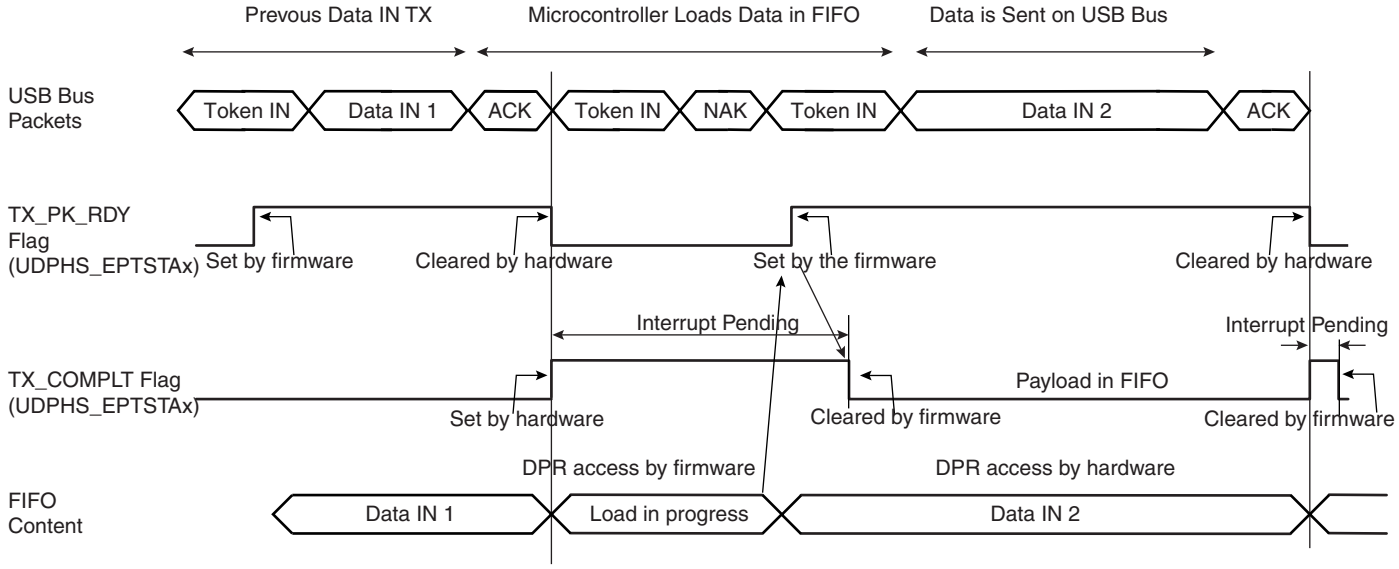

Figure 38-9. Data IN Transfer for Endpoint with Two Banks

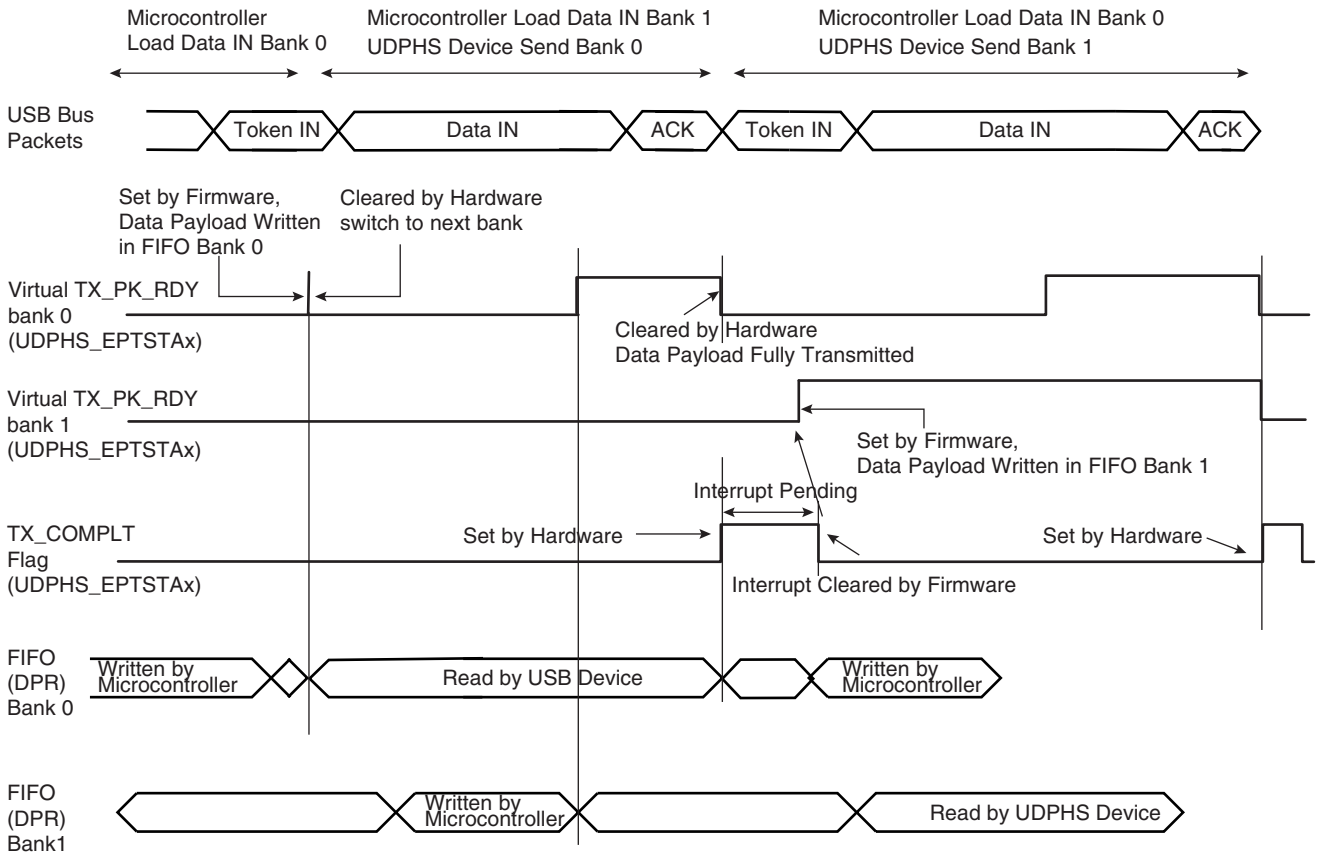

Figure 38-10. Data IN Followed By Status OUT Transfer at the End of a Control Transfer

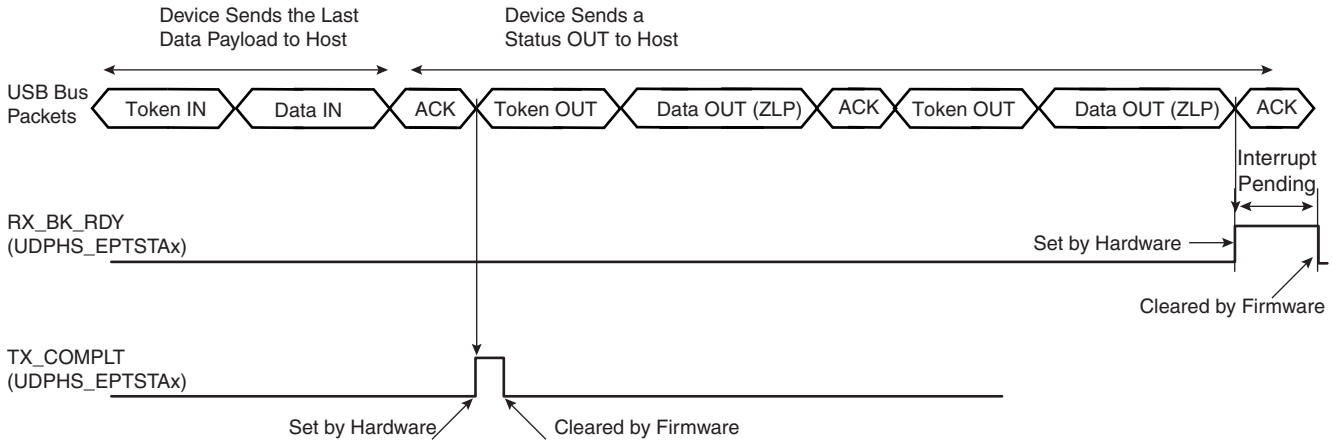

Note: A NAK handshake is always generated at the first status stage token.

Figure 38-11. Data OUT Followed by Status IN Transfer

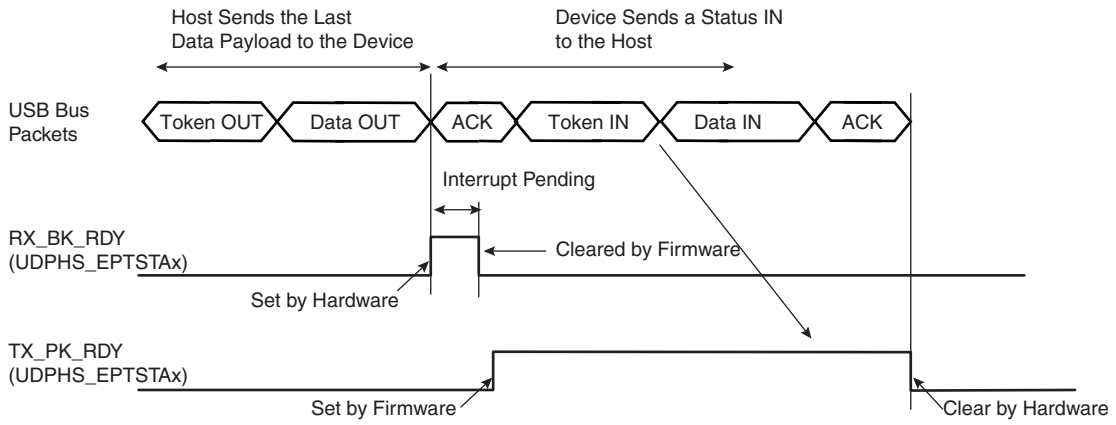

Note: Before proceeding to the status stage, the software should determine that there is no risk of extra data from the host (data stage). If not certain (non-predictable data stage length), then the software should wait for a NAK-IN interrupt before proceeding to the status stage. This precaution should be taken to avoid collision in the FIFO.

Figure 38-12. Autovalid with DMA

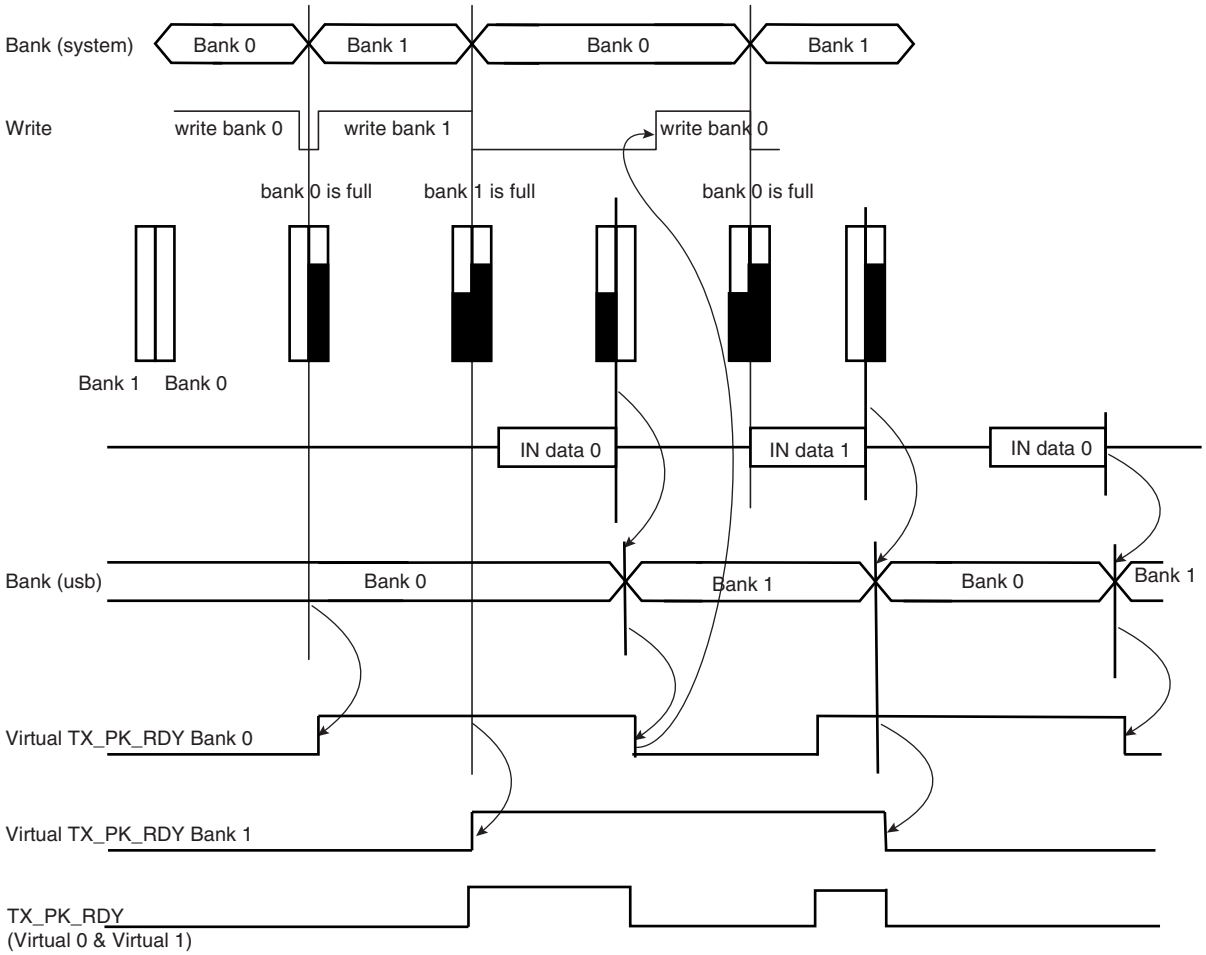

Note: In the illustration above Autovalid validates a bank as full, although this might not be the case, in order to continue processing data and to send to DMA.

38.5.8.7 Isochronous IN

Isochronous-IN is used to transmit a stream of data whose timing is implied by the delivery rate. Isochronous transfer provides periodic, continuous communication between host and device.

It guarantees bandwidth and low latencies appropriate for telephony, audio, video, etc.

If the endpoint is not available (TX_PK_RDY = 0), then the device does not answer to the host. An ERR_FL_ISO interrupt is generated in the UDPHS_EPTSTAx register and once enabled, then sent to the CPU.

The STALL_SNT command bit is not used for an ISO-IN endpoint.

38.5.8.8 High Bandwidth Isochronous Endpoint Handling: IN Example

For high bandwidth isochronous endpoints, the DMA can be programmed with the number of transactions (BUFF_LENGTH field in UDPHS_DMACONTROLx) and the system should provide the required number of packets per microframe, otherwise, the host will notice a sequencing problem.

A response should be made to the first token IN recognized inside a microframe under the following conditions:

- If at least one bank has been validated, the correct DATAx corresponding to the programmed Number Of Transactions per Microframe (NB_TRANS) should be answered. In case of a subsequent missed or corrupted token IN inside the microframe, the USB 2.0 Core available data bank(s) that should normally have been transmitted during that microframe shall be flushed at its end. If this flush occurs, an error condition is flagged (ERR_FLUSH is set in UDPHS_EPTSTAx).
- If no bank is validated yet, the default DATA0 ZLP is answered and underflow is flagged (ERR_FL_ISO is set in UDPHS_EPTSTAx). Then, no data bank is flushed at microframe end.
- If no data bank has been validated at the time when a response should be made for the second transaction of NB_TRANS = 3 transactions microframe, a DATA1 ZLP is answered and underflow is flagged (ERR_FL_ISO is set in UDPHS_EPTSTAx). If and only if remaining untransmitted banks for that microframe are available at its end, they are flushed and an error condition is flagged (ERR_FLUSH is set in UDPHS_EPTSTAx).
- If no data bank has been validated at the time when a response should be made for the last programmed transaction of a microframe, a DATA0 ZLP is answered and underflow is flagged (ERR_FL_ISO is set in UDPHS_EPTSTAx). If and only if the remaining untransmitted data bank for that microframe is available at its end, it is flushed and an error condition is flagged (ERR_FLUSH is set in UDPHS_EPTSTAx).
- If at the end of a microframe no valid token IN has been recognized, no data bank is flushed and no error condition is reported.

At the end of a microframe in which at least one data bank has been transmitted, if less than NB_TRANS banks have been validated for that microframe, an error condition is flagged (ERR_TRANS is set in UDPHS_EPTSTAx).

Cases of Error (in UDPHS_EPTSTAx)

- ERR_FL_ISO: There was no data to transmit inside a microframe, so a ZLP is answered by default.
- ERR_FLUSH: At least one packet has been sent inside the microframe, but the number of token IN received is lesser than the number of transactions actually validated (TX_BK_RDY) and likewise with the NB_TRANS programmed.
- ERR_TRANS: At least one packet has been sent inside the microframe, but the number of token IN received is lesser than the number of programmed NB_TRANS transactions and the packets not requested were not validated.
- ERR_FL_ISO + ERR_FLUSH: At least one packet has been sent inside the microframe, but the data has not been validated in time to answer one of the following token IN.
- ERR_FL_ISO + ERR_TRANS: At least one packet has been sent inside the microframe, but the data has not been validated in time to answer one of the following token IN and the data can be discarded at the microframe end.

- ERR_FLUSH + ERR_TRANS: The first token IN has been answered and it was the only one received, a second bank has been validated but not the third, whereas NB_TRANS was waiting for three transactions.
- ERR_FL_ISO + ERR_FLUSH + ERR_TRANS: The first token IN has been treated, the data for the second Token IN was not available in time, but the second bank has been validated before the end of the microframe. The third bank has not been validated, but three transactions have been set in NB_TRANS.

38.5.8.9 Data OUT

38.5.8.10 Bulk OUT or Interrupt OUT

Like data IN, data OUT packets are sent by the host during the data or the status stage of control transfer or during an interrupt/bulk/isochronous OUT transfer. Data buffers are sent packet by packet under the control of the application or under the control of the DMA channel.

38.5.8.11 Bulk OUT or Interrupt OUT: Receiving a Packet Under Application Control (Host to Device)

Algorithm Description for Each Packet:

- The application enables an interrupt on RX_BK_RDY.
- When an interrupt on RX_BK_RDY is received, the application knows that UDPHS_EPTSTAx register BYTE_COUNT bytes have been received.
- The application reads the BYTE_COUNT bytes from the endpoint.
- The application clears RX_BK_RDY.

Note: If the application does not know the size of the transfer, it may **not** be a good option to use AUTO_VALID. Because if a zero-length-packet is received, the RX_BK_RDY is automatically cleared by the AUTO_VALID hardware and if the endpoint interrupt is triggered, the software will not find its originating flag when reading the UDPHS_EPTSTAx register.

Algorithm to Fill Several Packets:

- The application enables the interrupts of BUSY_BANK and AUTO_VALID.
- When a BUSY_BANK interrupt is received, the application knows that all banks available for the endpoint have been filled. Thus, the application can read all banks available.

If the application doesn't know the size of the receive buffer, instead of using the BUSY_BANK interrupt, the application must use RX_BK_RDY.

38.5.8.12 Bulk OUT or Interrupt OUT: Sending a Buffer Using DMA (Host To Device)

To use the DMA setting, the AUTO_VALID field is mandatory.

See 38.5.8.6 Bulk IN or Interrupt IN: Sending a Buffer Using DMA (Device to Host) for more information.

DMA Configuration Example:

1. First program UDPHS_DMAADDRESSx with the address of the buffer that should be transferred.
2. Enable the interrupt of the DMA in UDPHS_IEN
3. Program the DMA Channelx Control Register:
   - Size of buffer to be sent.
   - END_B_EN: Can be used for OUT packet truncation (discarding of unbuffered packet data) at the end of DMA buffer.
   - END_BUFFIT: Generate an interrupt when BUFF_COUNT in the UDPHS_DMASTATUSx register reaches 0.
   - END_TR_EN: End of transfer enable, the UDPHS device can put an end to the current DMA transfer, in case of a short packet.

– END_TR_IT: End of transfer interrupt enable, an interrupt is sent after the last USB packet has been transferred by the DMA, if the USB transfer ended with a short packet. (Beneficial when the receive size is unknown.)

– CHANN_ENB: Run and stop at end of buffer.

For OUT transfer, the bank will be automatically cleared by hardware when the application has read all the bytes in the bank (the bank is empty).

Note: When a zero-length-packet is received, RX_BK_RDY bit in UDPHS_EPTSTAx is cleared automatically by AUTO_VALID, and the application knows of the end of buffer by the presence of the END_TR_IT.

Note: If the host sends a zero-length packet, and the endpoint is free, then the device sends an ACK. No data is written in the endpoint, the RX_BY_RDY interrupt is generated, and the BYTE_COUNT field in UDPHS_EPTSTAx is null.

Figure 38-13. Data OUT Transfer for Endpoint with One Bank

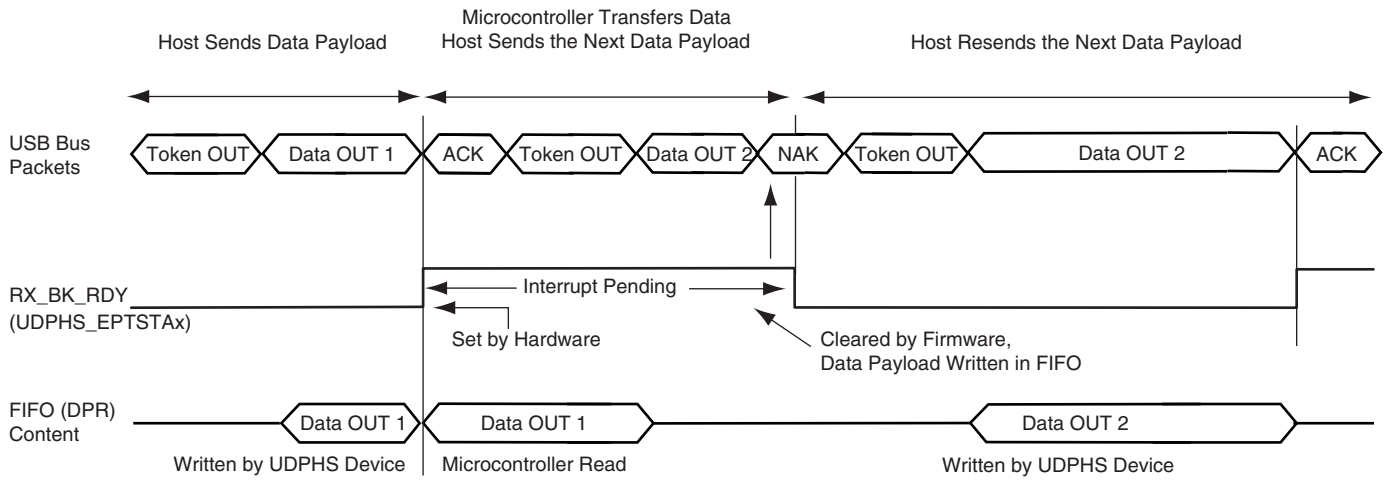

Figure 38-14. Data OUT Transfer for an Endpoint with Two Banks

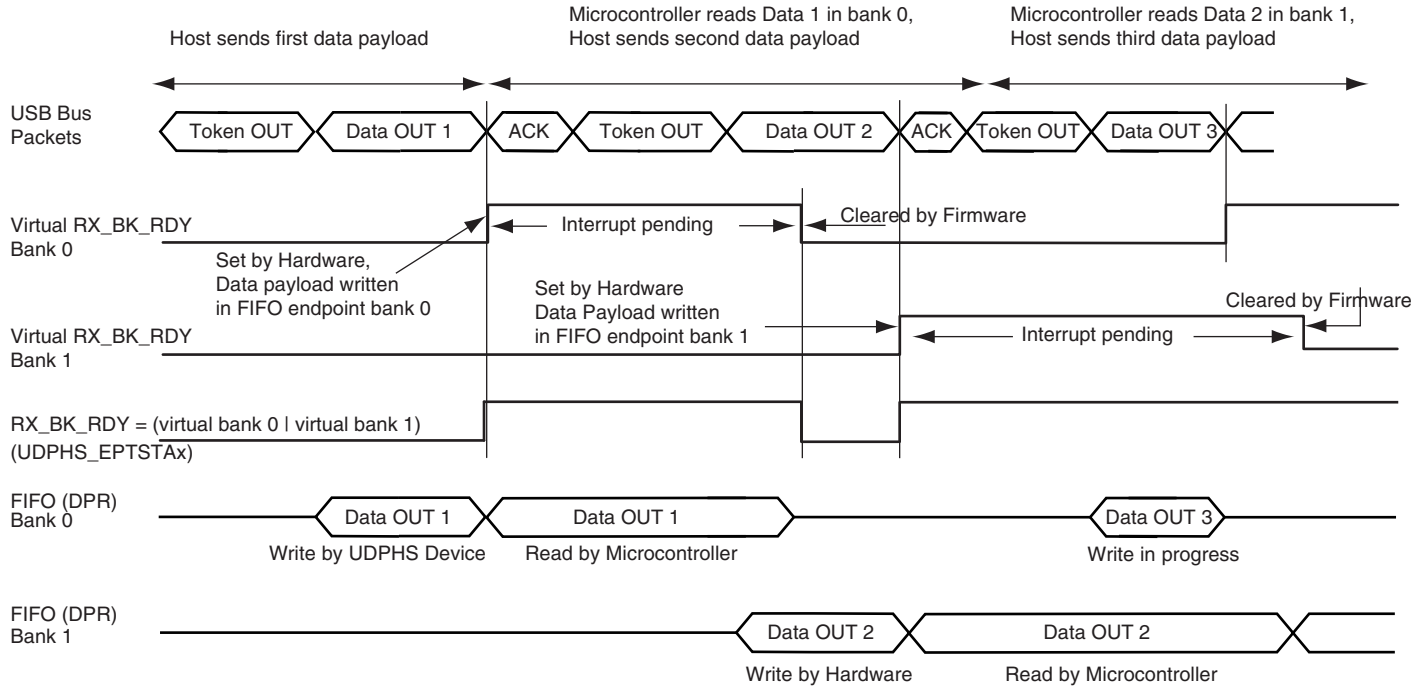

38.5.8.13 High Bandwidth Isochronous Endpoint OUT

Figure 38-15. Bank Management, Example of Three Transactions per Microframe

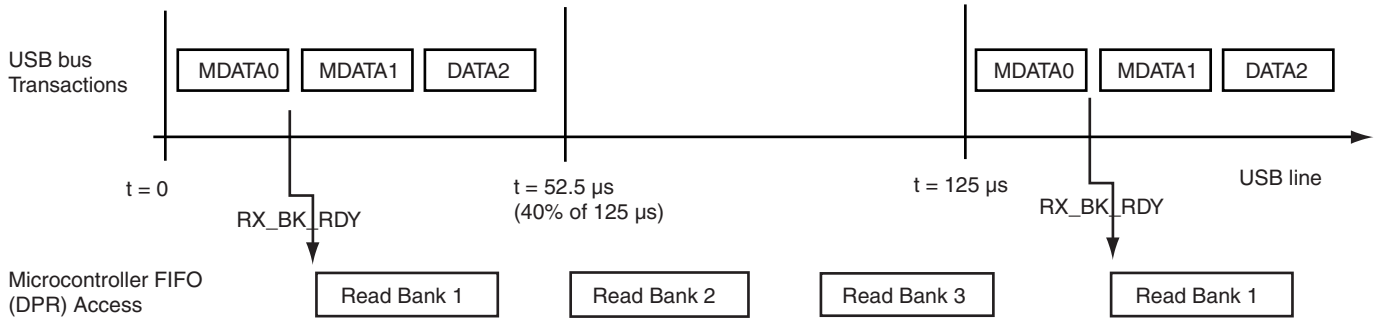

USB 2.0 supports individual High Speed isochronous endpoints that require data rates up to 192 Mb/s (24 MB/s): 3x1024 data bytes per microframe.

To support such a rate, two or three banks may be used to buffer the three consecutive data packets. The microcontroller (or the DMA) should be able to empty the banks very rapidly (at least 24 MB/s on average).

NB_TRANS field in UDPHS_EPTCFGx register = Number Of Transactions per Microframe.

If NB_TRANS > 1 then it is High Bandwidth.

Example:

- If NB_TRANS = 3, the sequence should be either

  - MData0
  - MData0/Data1
  - MData0/Data1/Data2
- If NB_TRANS = 2, the sequence should be either
  - MData0
  - MData0/Data1
- If NB_TRANS = 1, the sequence should be
  - Data0

38.5.8.14 *Isochronous Endpoint Handling: OUT Example*

The user can ascertain the bank status (free or busy), and the toggle sequencing of the data packet for each bank with the UDPHS_EPTSTAx register in the three bit fields as follows:

- TOGGLESQ_STA: PID of the data stored in the current bank
- CURRENT_BANK: Number of the bank currently being accessed by the microcontroller.
- BUSY_BANK_STA: Number of busy bank

This is particularly useful in case of a missing data packet.

If the inter-packet delay between the OUT token and the Data is greater than the USB standard, then the ISO-OUT transaction is ignored. (Payload data is not written, no interrupt is generated to the CPU.)

If there is a data CRC (Cyclic Redundancy Check) error, the payload is, none the less, written in the endpoint. The ERR_CRISO flag is set in UDPHS_EPTSTAx register.

If the endpoint is already full, the packet is not written in the DPRAM. The ERR_FL_ISO flag is set in UDPHS_EPTSTAx.

If the payload data is greater than the maximum size of the endpoint, then the ERR_OVFLW flag is set. It is the task of the CPU to manage this error. The data packet is written in the endpoint (except the extra data).

If the host sends a Zero Length Packet, and the endpoint is free, no data is written in the endpoint, the RX_BK_RDY flag is set, and the BYTE_COUNT field in UDPHS_EPTSTAx register is null.

The FRCESTALL command bit is unused for an isochonous endpoint.

Otherwise, payload data is written in the endpoint, the RX_BK_RDY interrupt is generated and the BYTE_COUNT in UDPHS_EPTSTAx register is updated.

38.5.8.15 STALL

STALL is returned by a function in response to an IN token or after the data phase of an OUT or in response to a PING transaction. STALL indicates that a function is unable to transmit or receive data, or that a control pipe request is not supported.

- OUT

To stall an endpoint, set the FRCESTALL bit in UDPHS_EPTSETSTAx register and after the STALL_SNT flag has been set, set the TOGGLE_SEG bit in the UDPHS_EPTCLRSTAx register.

- IN

Set the FRCESTALL bit in UDPHS_EPTSETSTAx register.

Figure 38-16. Stall Handshake Data OUT Transfer

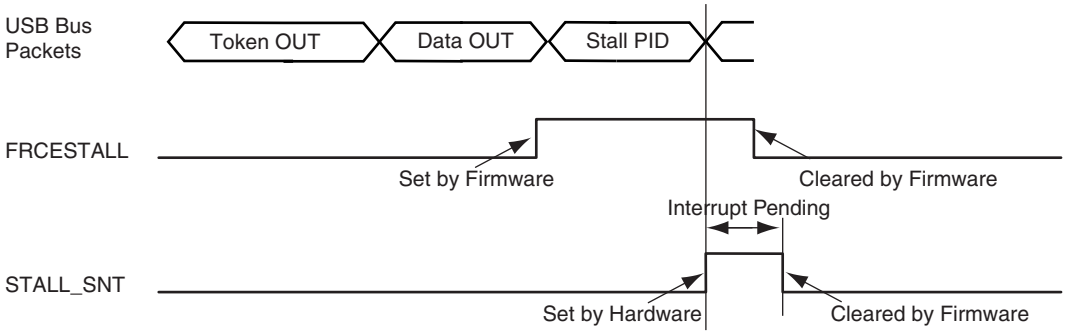

Figure 38-17. Stall Handshake Data IN Transfer

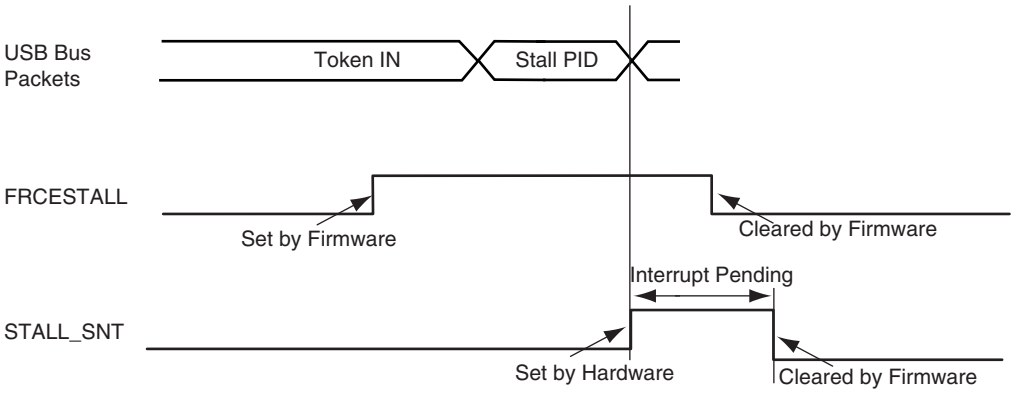

38.5.9 Speed Identification

The high speed reset is managed by the hardware.

At the connection, the host makes a reset which could be a classic reset (full speed) or a high speed reset.

At the end of the reset process (full or high), the ENDRESET interrupt is generated.

Then the CPU should read the SPEED bit in UDPHS_INTSTAx to ascertain the speed mode of the device.

38.5.10 USB V2.0 High Speed Global Interrupt

Interrupts are defined in Section 38.6.3 ”UDPHS Interrupt Enable Register” (UDPHS_IEN) and in Section 38.6.4 ”UDPHS Interrupt Status Register” (UDPHS_INTSTA).

38.5.11 Endpoint Interrupts

Interrupts are enabled in UDPHS_IEN (see Section 38.6.3 ”UDPHS Interrupt Enable Register”) and individually masked in UDPHS_EPTCTLENBx (see Section 38.6.12 ”UDPHS Endpoint Control Enable Register”).

.

Table 38-4. Endpoint Interrupt Source Masks

SHRT_PCKT	Short Packet Interrupt
BUSY_BANK	Busy Bank Interrupt
NAK_OUT	NAKOUT Interrupt
NAK_IN/ERR_FLUSH	NAKIN/Error Flush Interrupt
STALL_SNT/ERR_CRISO/ERR_NB_TRA	Stall Sent/CRC error/Number of Transaction Error Interrupt
RX_SETUP/ERR_FL_ISO	Received SETUP/Error Flow Interrupt
TX_PK_RD /ERR_TRANS	TX Packet Read/Transaction Error Interrupt
TX_COMPLT	Transmitted IN Data Complete Interrupt
RX_BK_RDY	Received OUT Data Interrupt
ERR_OVFLW	Overflow Error Interrupt
MDATA_RX	MDATA Interrupt
DATAX_RX	DATAx Interrupt

Figure 38-18. UDPHS Interrupt Control Interface

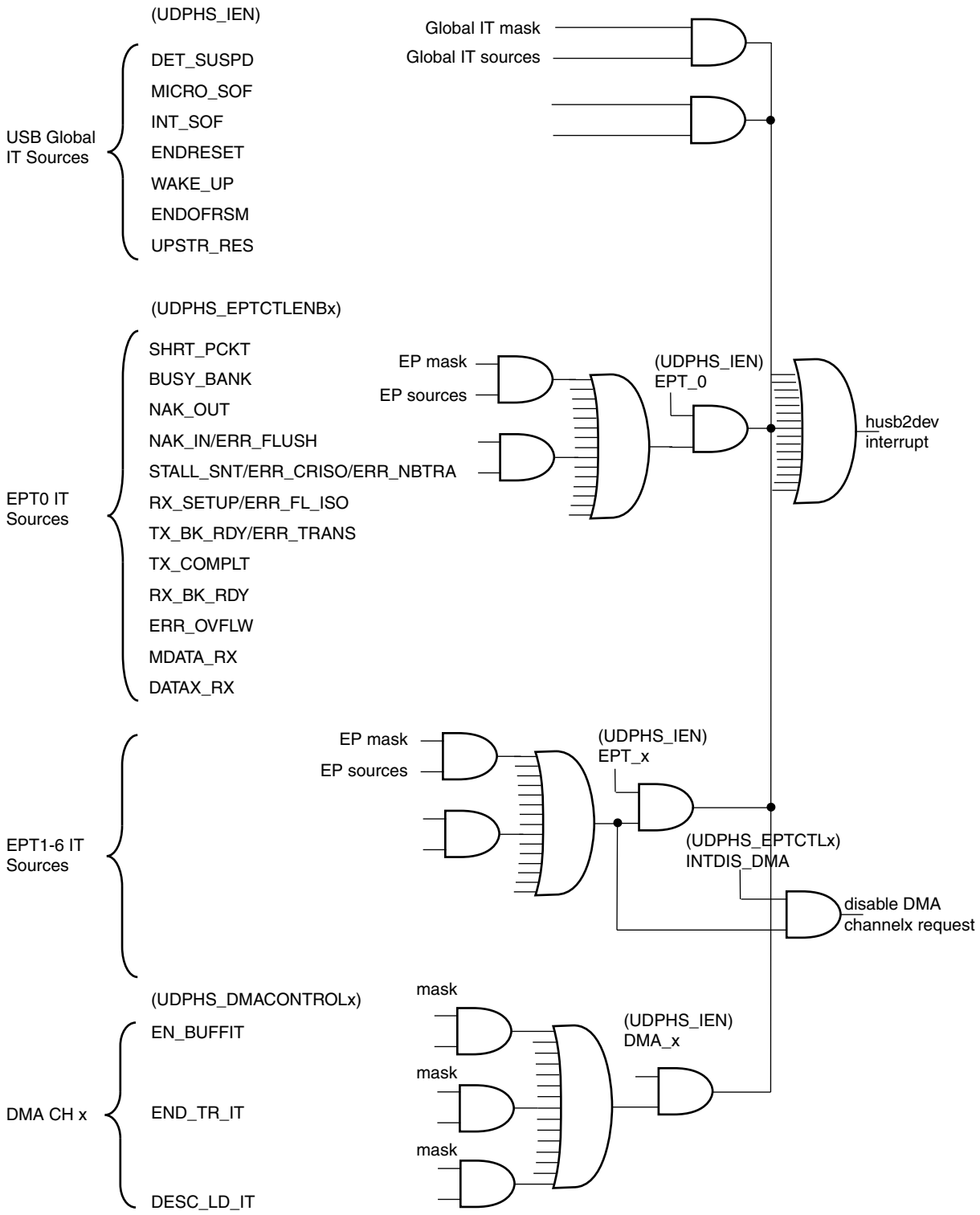

38.5.12 Power Modes

38.5.12.1 Controlling Device States

A USB device has several possible states. Refer to Chapter 9 (USB Device Framework) of the Universal Serial Bus Specification, Rev 2.0.

Figure 38-19. UDPHS Device State Diagram

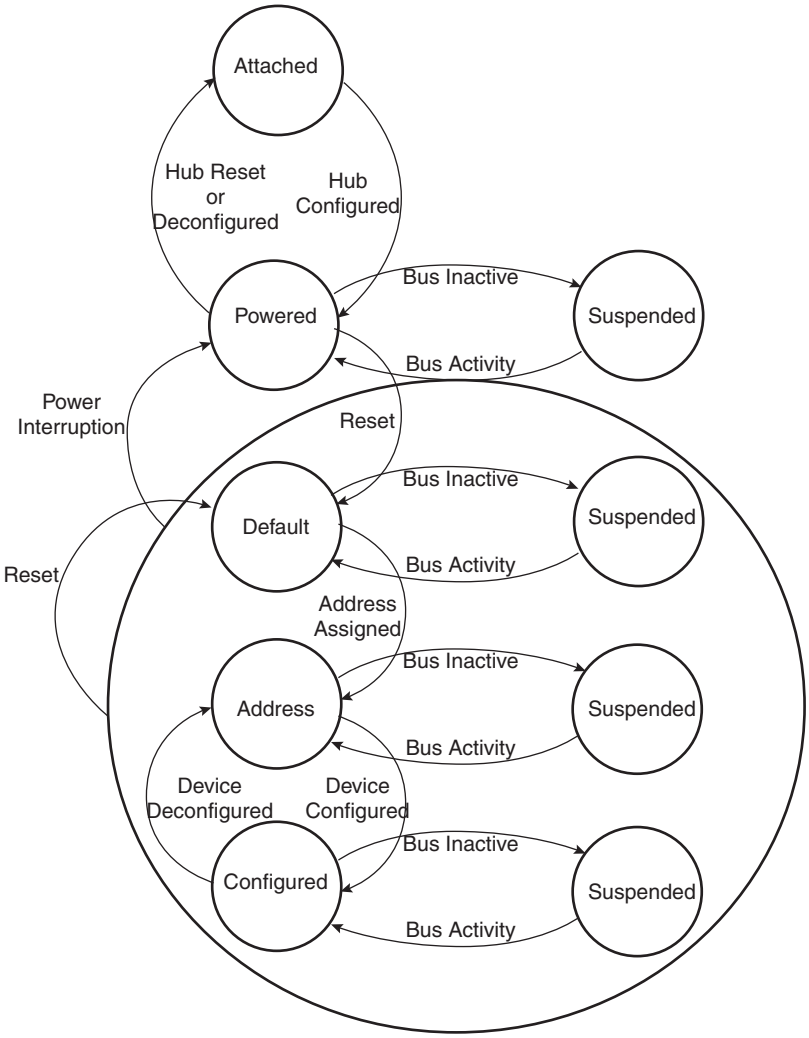

Movement from one state to another depends on the USB bus state or on standard requests sent through control transactions via the default endpoint (endpoint 0).

After a period of bus inactivity, the USB device enters Suspend Mode. Accepting Suspend/Resume requests from the USB host is mandatory. Constraints in Suspend Mode are very strict for bus-powered applications; devices may not consume more than 500 µA on the USB bus.

While in Suspend Mode, the host may wake up a device by sending a resume signal (bus activity) or a USB device may send a wake-up request to the host, e.g., waking up a PC by moving a USB mouse.

The wake-up feature is not mandatory for all devices and must be negotiated with the host.

38.5.12.2 Not Powered State

Self powered devices can detect 5V VBUS using a PIO. When the device is not connected to a host, device power consumption can be reduced by the DETACH bit in UDPHS_CTRL. Disabling the transceiver is automatically done. HSDM, HSDP, FSDP and FSDP lines are tied to GND pull-downs integrated in the hub downstream ports.

38.5.12.3 Entering Attached State

When no device is connected, the USB FSDP and FSDM signals are tied to GND by 15 KΩ pull-downs integrated in the hub downstream ports. When a device is attached to a hub downstream port, the device connects a 1.5 KΩ pull-up on FSDP. The USB bus line goes into IDLE state, FSDP is pulled-up by the device 1.5 KΩ resistor to 3.3V and FSDM is pulled-down by the 15 KΩ resistor to GND of the host.

After pull-up connection, the device enters the powered state. The transceiver remains disabled until bus activity is detected.

In case of low power consumption need, the device can be stopped. When the device detects the VBUS, the software must enable the USB transceiver by enabling the EN_UDPHS bit in UDPHS_CTRL register.

The software can detach the pull-up by setting DETACH bit in UDPHS_CTRL register.

38.5.12.4 From Powered State to Default State (Reset)

After its connection to a USB host, the USB device waits for an end-of-bus reset. The unmasked flag ENDRESET is set in the UDPHS_IEN register and an interrupt is triggered.

Once the ENDRESET interrupt has been triggered, the device enters Default State. In this state, the UDPHS software must:

- Enable the default endpoint, setting the EPT_ENABL flag in the UDPHS_EPTCTLENB[0] register and, optionally, enabling the interrupt for endpoint 0 by writing 1 in EPT_0 of the UDPHS_IEN register. The enumeration then begins by a control transfer.
- Configure the Interrupt Mask Register which has been reset by the USB reset detection
- Enable the transceiver.

In this state, the EN_UDPHS bit in UDPHS_CTRL register must be enabled.

38.5.12.5 From Default State to Address State (Address Assigned)

After a Set Address standard device request, the USB host peripheral enters the address state.

Warning: before the device enters address state, it must achieve the Status IN transaction of the control transfer, i.e., the UDPHS device sets its new address once the TX_COMPLT flag in the UDPHS_EPTCTL[0] register has been received and cleared.

To move to address state, the driver software sets the DEV_ADDR field and the FADDR_EN flag in the UDPHS_CTRL register.

38.5.12.6 From Address State to Configured State (Device Configured)

Once a valid Set Configuration standard request has been received and acknowledged, the device enables endpoints corresponding to the current configuration. This is done by setting the BK_NUMBER, EPT_TYPE, EPT_DIR and EPT_SIZE fields in the UDPHS_EPTCFGx registers and enabling them by setting the EPT_ENABL flag in the UDPHS_EPTCTLENBx registers, and, optionally, enabling corresponding interrupts in the UDPHS_IEN register.

38.5.12.7 Entering Suspend State (Bus Activity)

When a Suspend (no bus activity on the USB bus) is detected, the DET_SUSPD signal in the UDPHS_STA register is set. This triggers an interrupt if the corresponding bit is set in the UDPHS_IEN register. This flag is cleared by writing to the UDPHS_CLRINT register. Then the device enters Suspend Mode.

In this state bus powered devices must drain less than 500 µA from the 5V VBUS. As an example, the microcontroller switches to slow clock, disables the PLL and main oscillator, and goes into Idle Mode. It may also switch off other devices on the board.

The UDPHS device peripheral clocks can be switched off. Resume event is asynchronously detected.

38.5.12.8 Receiving a Host Resume

In Suspend mode, a resume event on the USB bus line is detected asynchronously, transceiver and clocks disabled (however the pull-up should not be removed).

Once the resume is detected on the bus, the signal WAKE_UP in the UDPHS_INTSTA is set. It may generate an interrupt if the corresponding bit in the UDPHS_IEN register is set. This interrupt may be used to wake-up the core, enable PLL and main oscillators and configure clocks.

38.5.12.9 Sending an External Resume

In Suspend State it is possible to wake-up the host by sending an external resume.

The device waits at least 5 ms after being entered in Suspend State before sending an external resume.

The device must force a K state from 1 to 15 ms to resume the host.

38.5.13 Test Mode

A device must support the TEST_MODE feature when in the Default, Address or Configured High Speed device states.

TEST_MODE can be:

- Test_J
- Test_K
- Test_Packet
- Test_SEO_NAK

(See Section 38.6.7 “UDPHS Test Register” on page 828 for definitions of each test mode.)

```
const char test_packet_buffer[] = {
  0x00,0x00,0x00,0x00,0x00,0x00,0x00,0x00,0x00,                // JKJKJKJK * 9
  0xAA,0xAA,0xAA,0xAA,0xAA,0xAA,0xAA,0xAA,                     // JJKKJJKK * 8
  0xEE,0xEE,0xEE,0xEE,0xEE,0xEE,0xEE,0xEE,                     // JJKKJJKK * 8
  0xFE,0xFF,0xFF,0xFF,0xFF,0xFF,0xFF,0xFF,0xFF,0xFF,0xFF,0xFF, // JJJJJJJKKKKKKK * 8
  0x7F,0xBF,0xDF,0xEF,0xF7,0xFB,0xFD,                          // JJJJJJJK * 8
  0xFC,0x7E,0xBF,0xDF,0xEF,0xF7,0xFB,0xFD,0x7E                 // {JKKKKKKK * 10}, JK
};
```

38.6 USB High Speed Device Port (UDPHS) User Interface

Table 38-5. Register Mapping

Offset	Register	Name	Access	Reset
0x00	UDPHS Control Register	UDPHS_CTRL	Read-write	0x0000_0200
0x04	UDPHS Frame Number Register	UDPHS_FNUM	Read	0x0000_0000
0x08 - 0x0C	Reserved	–	–	–
0x10	UDPHS Interrupt Enable Register	UDPHS_IEN	Read-write	0x0000_0010
0x14	UDPHS Interrupt Status Register	UDPHS_INTSTA	Read	0x0000_0000
0x18	UDPHS Clear Interrupt Register	UDPHS_CLRINT	Write	–
0x1C	UDPHS Endpoints Reset Register	UDPHS_EPTRST	Write	–
0x20 - 0xCC	Reserved	–	–	–
0xE0	UDPHS Test Register	UDPHS_TST	Read-write	0x0000_0000
0xE4 - 0xE8	Reserved	–	–	–
0xF0	UDPHS Name1 Register	UDPHS_IPNAME1	Read	0x4855_5342
0xF4	UDPHS Name2 Register	UDPHS_IPNAME2	Read	0x3244_4556
0xF8	UDPHS Features Register	UDPHS_IPFEATURES	Read	
0x100 + endpoint * 0x20 + 0x00	UDPHS Endpoint Configuration Register	UDPHS_EPTCFG	Read-write	0x0000_0000
0x100 + endpoint * 0x20 + 0x04	UDPHS Endpoint Control Enable Register	UDPHS_EPTCTLENB	Write	–
0x100 + endpoint * 0x20 + 0x08	UDPHS Endpoint Control Disable Register	UDPHS_EPTCTLDIS	Write	–
0x100 + endpoint * 0x20 + 0x0C	UDPHS Endpoint Control Register	UDPHS_EPTCTL	Read	0x0000_0000[1]
0x100 + endpoint * 0x20 + 0x10	Reserved (for endpoint)	–	–	–
0x100 + endpoint * 0x20 + 0x14	UDPHS Endpoint Set Status Register	UDPHS_EPTSETSTA	Write	–
0x100 + endpoint * 0x20 + 0x18	UDPHS Endpoint Clear Status Register	UDPHS_EPTCLRSTA	Write	–
0x100 + endpoint * 0x20 + 0x1C	UDPHS Endpoint Status Register	UDPHS_EPTSTA	Read	0x0000_0040
0x120 - 0x1DC	UDPHS Endpoint1 to 6 [2] Registers			
0x1E0 - 0x300	Reserved			
0x300 - 0x30C	Reserved	–	–	–
0x310 + channel * 0x10 + 0x00	UDPHS DMA Next Descriptor Address Register	UDPHS_DMANXTDSC	Read-write	0x0000_0000
0x310 + channel * 0x10 + 0x04	UDPHS DMA Channel Address Register	UDPHS_DMAADDRESS	Read-write	0x0000_0000
0x310 + channel * 0x10 + 0x08	UDPHS DMA Channel Control Register	UDPHS_DMACONTROL	Read-write	0x0000_0000
0x310 + channel * 0x10 + 0x0C	UDPHS DMA Channel Status Register	UDPHS_DMASTATUS	Read-write	0x0000_0000
0x320 - 0x370	DMA Channel2 to 5 [3] Registers			

Notes:
1. The reset value for UDPHS_EPTCTL0 is 0x0000_0001.
2. The addresses for the UDPHS Endpoint registers shown here are for UDPHS Endpoint0. The structure of this group of registers is repeated successively for each endpoint according to the consecution of endpoint registers located between 0x120 and 0x1DC.
3. The addresses for the UDPHS DMA registers shown here are for UDPHS DMA Channel1. (There is no Channel0) The structure of this group of registers is repeated successively for each DMA channel according to the consecution of DMA registers located between 0x320 and 0x370.

38.6.1 UDPHS Control Register

Name: UDPHS_CTRL

Address: 0xFFF78000

Access Type: Read-write

31	30	29	28	27	26	25	24
–	–	–	–	–	–	–	–

23	22	21	20	19	18	17	16
–	–	–	–	–	–	–	–

15	14	13	12	11	10	9	8
–	–	–	–	PULLD_DIS	REWAKEUP	DETACH	EN_UDPHS

7	6	5	4	3	2	1	0
FADDR_EN	DEV_ADDR						

- **DEV_ADDR: UDPHS Address**

Read:

This field contains the default address (0) after power-up or UDPHS bus reset.

Write:

This field is written with the value set by a SET_ADDRESS request received by the device firmware.

- **FADDR_EN: Function Address Enable**

Read:

0 = Device is not in address state.

1 = Device is in address state.

Write:

0 = Only the default function address is used (0).

1 = This bit is set by the device firmware after a successful status phase of a SET_ADDRESS transaction. When set, the only address accepted by the UDPHS controller is the one stored in the UDPHS Address field. It will not be cleared afterwards by the device firmware. It is cleared by hardware on hardware reset, or when UDPHS bus reset is received (see above).

- **EN_UDPHS: UDPHS Enable**

Read:

0 = UDPHS is disabled.

1 = UDPHS is enabled.

Write:

0 = Disable and reset the UDPHS controller. Switch the host to UTMI.

1 = Enables the UDPHS controller. Switch the host to UTMI.

- **DETACH: Detach Command**

Read:

0 = UDPHS is attached.

1 = UDPHS is detached, UTMI transceiver is suspended.

Write:

0 = Pull up the DP line (attach command).

1 = Simulate a detach on the UDPHS line and force the UTMI transceiver into suspend state (Suspend M = 0).

(See PULLD_DIS description below.)

- **REWAKEUP: Send Remote Wake Up**

Read:

0 = Remote Wake Up is disabled.

1 = Remote Wake Up is enabled.

Write:

0 = No effect.

1 = Force an external interrupt on the UDPHS controller for Remote Wake UP purposes.

An Upstream Resume is sent only after the UDPHS bus has been in SUSPEND state for at least 5 ms.

This bit is automatically cleared by hardware at the end of the Upstream Resume.

- **PULLD_DIS: Pull-Down Disable**

When set, there is no pull-down on DP & DM. (DM Pull-Down = DP Pull-Down = 0).

Note: If the DETACH bit is also set, device DP & DM are left in high impedance state.

(See DETACH description above.)

DETACH	PULLD_DIS	DP	DM	Condition
0	0	Pull up	Pull down	not recommended
0	1	Pull up	High impedance state	VBUS present
1	0	Pull down	Pull down	No VBUS
1	1	High impedance state	High impedance state	VBUS present & software disconnect

38.6.2 UDPHS Frame Number Register

Name: UDPHS_FNUM

Address: 0xFFF78004

Access Type: Read

31	30	29	28	27	26	25	24
FNUM_ERR	–	–	–	–	–	–	–

23	22	21	20	19	18	17	16
–	–	–	–	–	–	–	–

15	14	13	12	11	10	9	8
–	–	FRAME_NUMBER					

7	6	5	4	3	2	1	0
FRAME_NUMBER					MICRO_FRAME_NUM		

- **MICRO_FRAME_NUM: Microframe Number**

Number of the received microframe (0 to 7) in one frame.This field is reset at the beginning of each new frame (1 ms).

One microframe is received each 125 microseconds (1 ms/8).

- **FRAME_NUMBER: Frame Number as defined in the Packet Field Formats**

This field is provided in the last received SOF packet (see INT_SOF in the UDPHS Interrupt Status Register).

- **FNUM_ERR: Frame Number CRC Error**

This bit is set by hardware when a corrupted Frame Number in Start of Frame packet (or Micro SOF) is received.

This bit and the INT_SOF (or MICRO_SOF) interrupt are updated at the same time.

38.6.3 UDPHS Interrupt Enable Register

Name: UDPHS_IEN

Address: 0xFFF78010

Access Type: Read-write

31	30	29	28	27	26	25	24
–	DMA_6	DMA_5	DMA_4	DMA_3	DMA_2	DMA_1	–

23	22	21	20	19	18	17	16
–	–	–	–	–	–	–	–

15	14	13	12	11	10	9	8
–	EPT_6	EPT_5	EPT_4	EPT_3	EPT_2	EPT_1	EPT_0

7	6	5	4	3	2	1	0
UPSTR_RES	ENDOFRSM	WAKE_UP	ENDRESET	INT_SOF	MICRO_SOF	DET_SUSPD	–

- **DET_SUSPD: Suspend Interrupt Enable**

Read:

0 = Suspend Interrupt is disabled.

1 = Suspend Interrupt is enabled.

Write:

0 = Disable Suspend Interrupt.

1 = Enable Suspend Interrupt.

- **MICRO_SOF: Micro-SOF Interrupt Enable**

Read:

0 = Micro-SOF Interrupt is disabled.

1 = Micro-SOF Interrupt is enabled.

Write:

0 = Disable Micro-SOF Interrupt.

1 = Enable Micro-SOF Interrupt.

- **INT_SOF: SOF Interrupt Enable**

Read:

0 = SOF Interrupt is disabled.

1 = SOF Interrupt is enabled.

Write:

0 = Disable SOF Interrupt.

1 = Enable SOF Interrupt.

- **ENDRESET: End Of Reset Interrupt Enable**

Read:

0 = End Of Reset Interrupt is disabled.

1 = End Of Reset Interrupt is enabled.

Write:

0 = Disable End Of Reset Interrupt.

1 = Enable End Of Reset Interrupt. Automatically enabled after USB reset.

- **WAKE_UP: Wake Up CPU Interrupt Enable**

Read:

0 = Wake Up CPU Interrupt is disabled.

1 = Wake Up CPU Interrupt is enabled.

Write

0 = Disable Wake Up CPU Interrupt.

1 = Enable Wake Up CPU Interrupt.

- **ENDOFRSM: End Of Resume Interrupt Enable**

Read:

0 = Resume Interrupt is disabled.

1 = Resume Interrupt is enabled.

Write:

0 = Disable Resume Interrupt.

1 = Enable Resume Interrupt.

- **UPSTR_RES: Upstream Resume Interrupt Enable**

Read:

0 = Upstream Resume Interrupt is disabled.

1 = Upstream Resume Interrupt is enabled.

Write:

0 = Disable Upstream Resume Interrupt.

1 = Enable Upstream Resume Interrupt.

- **EPT_x: Endpoint x Interrupt Enable**

Read:

0 = The interrupts for this endpoint are disabled.

1 = The interrupts for this endpoint are enabled.

Write:

0 = Disable the interrupts for this endpoint.

1 = Enable the interrupts for this endpoint.

- **DMA_x: DMA Channel x Interrupt Enable**

Read:

0 = The interrupts for this channel are disabled.

1 = The interrupts for this channel are enabled.

Write:

0 = Disable the interrupts for this channel.

1 = Enable the interrupts for this channel.

38.6.4 UDPHS Interrupt Status Register

Name: UDPHS_INTSTA

Address: 0xFFF78014

Access Type: Read-only

31	30	29	28	27	26	25	24
–	DMA_6	DMA_5	DMA_4	DMA_3	DMA_2	DMA_1	–

23	22	21	20	19	18	17	16
–	–	–	–	–	–	–	–

15	14	13	12	11	10	9	8
–	EPT_6	EPT_5	EPT_4	EPT_3	EPT_2	EPT_1	EPT_0

7	6	5	4	3	2	1	0
UPSTR_RES	ENDOFRSM	WAKE_UP	ENDRESET	INT_SOF	MICRO_SOF	DET_SUSPD	SPEED

- **SPEED: Speed Status**

0 = Reset by hardware when the hardware is in Full Speed mode.

1 = Set by hardware when the hardware is in High Speed mode

- **DET_SUSPD: Suspend Interrupt**

0 = Cleared by setting the DET_SUSPD bit in UDPHS_CLRINT register

1 = Set by hardware when a UDPHS Suspend (Idle bus for three frame periods, a J state for 3 ms) is detected. This triggers a UDPHS interrupt when the DET_SUSPD bit is set in UDPHS_IEN register.

- **MICRO_SOF: Micro Start Of Frame Interrupt**

0 = Cleared by setting the MICRO_SOF bit in UDPHS_CLRINT register.

1 = Set by hardware when an UDPHS micro start of frame PID (SOF) has been detected (every 125 us) or synthesized by the macro. This triggers a UDPHS interrupt when the MICRO_SOF bit is set in UDPHS_IEN. In case of detected SOF, the MICRO_FRAME_NUM field in UDPHS_FNUM register is incremented and the FRAME_NUMBER field doesn't change.

Note: The Micro Start Of Frame Interrupt (MICRO_SOF), and the Start Of Frame Interrupt (INT_SOF) are not generated at the same time.

- **INT_SOF: Start Of Frame Interrupt**

0 = Cleared by setting the INT_SOF bit in UDPHS_CLRINT.

1 = Set by hardware when an UDPHS Start Of Frame PID (SOF) has been detected (every 1 ms) or synthesized by the macro. This triggers a UDPHS interrupt when the INT_SOF bit is set in UDPHS_IEN register. In case of detected SOF, in High Speed mode, the MICRO_FRAME_NUMBER field is cleared in UDPHS_FNUM register and the FRAME_NUMBER field is updated.

- **ENDRESET: End Of Reset Interrupt**

0 = Cleared by setting the ENDRESET bit in UDPHS_CLRINT.

1 = Set by hardware when an End Of Reset has been detected by the UDPHS controller. This triggers a UDPHS interrupt when the ENDRESET bit is set in UDPHS_IEN.

- **WAKE_UP: Wake Up CPU Interrupt**

0 = Cleared by setting the WAKE_UP bit in UDPHS_CLRINT.

1 = Set by hardware when the UDPHS controller is in SUSPEND state and is re-activated by a filtered non-idle signal from the UDPHS line (not by an upstream resume). This triggers a UDPHS interrupt when the WAKE_UP bit is set in UDPHS_IEN register. When receiving this interrupt, the user has to enable the device controller clock prior to operation.

Note: this interrupt is generated even if the device controller clock is disabled.

- **ENDOFRSM: End Of Resume Interrupt**

0 = Cleared by setting the ENDOFRSM bit in UDPHS_CLRINT.

1 = Set by hardware when the UDPHS controller detects a good end of resume signal initiated by the host. This triggers a UDPHS interrupt when the ENDOFRSM bit is set in UDPHS_IEN.

- **UPSTR_RES: Upstream Resume Interrupt**

0 = Cleared by setting the UPSTR_RES bit in UDPHS_CLRINT.

1 = Set by hardware when the UDPHS controller is sending a resume signal called “upstream resume”. This triggers a UDPHS interrupt when the UPSTR_RES bit is set in UDPHS_IEN.

- **EPT_x: Endpoint x Interrupt**

0 = Reset when the UDPHS_EPTSTAx interrupt source is cleared.

1 = Set by hardware when an interrupt is triggered by the UDPHS_EPTSTAx register and this endpoint interrupt is enabled by the EPT_x bit in UDPHS_IEN.

- **DMA_x: DMA Channel x Interrupt**

0 = Reset when the UDPHS_DMASTATUSx interrupt source is cleared.

1 = Set by hardware when an interrupt is triggered by the DMA Channelx and this endpoint interrupt is enabled by the DMA_x bit in UDPHS_IEN.

38.6.5 UDPHS Clear Interrupt Register

Name: UDPHS_CLRINT

Address: 0xFFF78018

Access Type: Write only

31	30	29	28	27	26	25	24
–	–	–	–	–	–	–	–

23	22	21	20	19	18	17	16
–	–	–	–	–	–	–	–

15	14	13	12	11	10	9	8
–	–	–	–	–	–	–	–

7	6	5	4	3	2	1	0
UPSTR_RES	ENDOFRSM	WAKE_UP	ENDRESET	INT_SOF	MICRO_SOF	DET_SUSPD	–

- **DET_SUSPD: Suspend Interrupt Clear**

0 = No effect.

1 = Clear the DET_SUSPD bit in UDPHS_INTSTA.

- **MICRO_SOF: Micro Start Of Frame Interrupt Clear**

0 = No effect.

1 = Clear the MICRO_SOF bit in UDPHS_INTSTA.

- **INT_SOF: Start Of Frame Interrupt Clear**

0 = No effect.

1 = Clear the INT_SOF bit in UDPHS_INTSTA.

- **ENDRESET: End Of Reset Interrupt Clear**

0 = No effect.

1 = Clear the ENDRESET bit in UDPHS_INTSTA.

- **WAKE_UP: Wake Up CPU Interrupt Clear**

0 = No effect.

1 = Clear the WAKE_UP bit in UDPHS_INTSTA.

- **ENDOFRSM: End Of Resume Interrupt Clear**

0 = No effect.

1 = Clear the ENDOFRSM bit in UDPHS_INTSTA.

- **UPSTR_RES: Upstream Resume Interrupt Clear**

0 = No effect.

1 = Clear the UPSTR_RES bit in UDPHS_INTSTA.

38.6.6 UDPHS Endpoints Reset Register

Name: UDPHS_EPTRST

Address: 0xFFF7801C

Access Type: Write only

31	30	29	28	27	26	25	24
–	–	–	–	–	–	–	–

23	22	21	20	19	18	17	16
–	–	–	–	–	–	–	–

15	14	13	12	11	10	9	8
–	–	–	–	–	–	–	–

7	6	5	4	3	2	1	0
–	EPT_6	EPT_5	EPT_4	EPT_3	EPT_2	EPT_1	EPT_0

- **EPT_x: Endpoint x Reset**

0 = No effect.

1 = Reset the Endpointx state.

Setting this bit clears the Endpoint status UDPHS_EPTSTAx register, except for the TOGGLESQ_STA field.

38.6.7 UDPHS Test Register

Name: UDPHS_TST

Address: 0xFFF780E0

Access Type: Read-write

31	30	29	28	27	26	25	24
–	–	–	–	–	–	–	–

23	22	21	20	19	18	17	16
–	–	–	–	–	–	–	–

15	14	13	12	11	10	9	8
–	–	–	–	–	–	–	–

7	6	5	4	3	2	1	0
–	–	OPMODE2	TST_PKT	TST_K	TST_J	SPEED_CFG	

- **SPEED_CFG: Speed Configuration**

Read-write:

Speed Configuration:

00	Normal Mode: The macro is in Full Speed mode, ready to make a High Speed identification, if the host supports it and then to automatically switch to High Speed mode
01	Reserved
10	Force High Speed: Set this value to force the hardware to work in High Speed mode. Only for debug or test purpose.
11	Force Full Speed: Set this value to force the hardware to work only in Full Speed mode. In this configuration, the macro will not respond to a High Speed reset handshake

- **TST_J: Test J Mode**

Read and write:

0 = No effect.

1 = Set to send the J state on the UDPHS line. This enables the testing of the high output drive level on the D+ line.

- **TST_K: Test K Mode**

Read and write:

0 = No effect.

1 = Set to send the K state on the UDPHS line. This enables the testing of the high output drive level on the D- line.

- **TST_PKT: Test Packet Mode**

Read and write:

0 = No effect.

1 = Set to repetitively transmit the packet stored in the current bank. This enables the testing of rise and fall times, eye patterns, jitter, and any other dynamic waveform specifications.

- **OPMODE2: OpMode2**

Read and write:

0 = No effect.

1 = Set to force the OpMode signal (UTMI interface) to “10”, to disable the bit-stuffing and the NRZI encoding.

Note: For the Test mode, Test_SE0_NAK (see Universal Serial Bus Specification, Revision 2.0: 7.1.20, Test Mode Support). Force the device in High Speed mode, and configure a bulk-type endpoint. Do not fill this endpoint for sending NAK to the host.

Upon command, a port’s transceiver must enter the High Speed receive mode and remain in that mode until the exit action is taken. This enables the testing of output impedance, low level output voltage and loading characteristics. In addition, while in this mode, upstream facing ports (and only upstream facing ports) must respond to any IN token packet with a NAK handshake (only if the packet CRC is determined to be correct) within the normal allowed device response time. This enables testing of the device squelch level circuitry and, additionally, provides a general purpose stimulus/response test for basic functional testing.

38.6.8 UDPHS Name1 Register

Name: UDPHS_IPNAME1

Address: 0xFFF780F0

Access Type: Read-only

31	30	29	28	27	26	25	24
IP_NAME1							

23	22	21	20	19	18	17	16
IP_NAME1							

15	14	13	12	11	10	9	8
IP_NAME1							

7	6	5	4	3	2	1	0
IP_NAME1							

- **IP_NAME1**

ASCII string “HUSB”

38.6.9 UDPHS Name2 Register

Name: UDPHS_IPNAME2

Address: 0xFFF780F4

Access Type: Read-only

31	30	29	28	27	26	25	24
IP_NAME2							

23	22	21	20	19	18	17	16
IP_NAME2							

15	14	13	12	11	10	9	8
IP_NAME2							

7	6	5	4	3	2	1	0
IP_NAME2							

- **IP_NAME2**

ASCII string “2DEV”

38.6.10 UDPHS Features Register

Name: UDPHS_IPFEATURES

Address: 0xFFF780F8

Access Type: Read-only

31	30	29	28	27	26	25	24
ISO_EPT_15	ISO_EPT_14	ISO_EPT_13	ISO_EPT_12	ISO_EPT_11	ISO_EPT_10	ISO_EPT_9	ISO_EPT_8

23	22	21	20	19	18	17	16
ISO_EPT_7	ISO_EPT_6	ISO_EPT_5	ISO_EPT_4	ISO_EPT_3	ISO_EPT_2	ISO_EPT_1	DATAB16_8

15	14	13	12	11	10	9	8
BW_DPRAM	FIFO_MAX_SIZE			DMA_FIFO_WORD_DEPTH			

7	6	5	4	3	2	1	0
DMA_B_SIZ	DMA_CHANNEL_NBR			EPT_NBR_MAX			

- **EPT_NBR_MAX: Max Number of Endpoints**

Give the max number of endpoints.

0 = If 16 endpoints are hardware implemented.

1 = If 1 endpoint is hardware implemented.

2 = If 2 endpoints are hardware implemented.

...

15 = If 15 endpoints are hardware implemented.

- **DMA_CHANNEL_NBR: Number of DMA Channels**

Give the number of DMA channels.

1 = If 1 DMA channel is hardware implemented.

2 = If 2 DMA channels are hardware implemented.

...

7 = if 7 DMA channels are hardware implemented.

- **DMA_B_SIZ: DMA Buffer Size**

0 = If the DMA Buffer size is 16 bits.

1 = If the DMA Buffer size is 24 bits.

- **DMA_FIFO_WORD_DEPTH: DMA FIFO Depth in Words**

0 = If FIFO is 16 words deep.

1 = If FIFO is 1 word deep.

2 = If FIFO is 2 words deep.

...

15 = If FIFO is 15 words deep.

- **FIFO_MAX_SIZE: DPRAM Size**

0 = If DPRAM is 128 bytes deep.

1 = If DPRAM is 256 bytes deep.

2 = If DPRAM is 512 bytes deep.

3 = If DPRAM is 1024 bytes deep.

4 = If DPRAM is 2048 bytes deep.

5 = If DPRAM is 4096 bytes deep.

6 = If DPRAM is 8192 bytes deep.

7 = If DPRAM is 16384 bytes deep.

- **BW_DPRAM: DPRAM Byte Write Capability**

0 = If DPRAM Write Data Shadow logic is implemented.

1 = If DPRAM is byte write capable.

- **DATAB16_8: UTMI DataBus16_8**

0 = If the UTMI uses an 8-bit parallel data interface (60 MHz, unidirectional).

1 = If the UTMI uses a 16-bit parallel data interface (30 MHz, bidirectional).

- **ISO_EPT_x: Endpointx High Bandwidth Isochronous Capability**

0 = If the endpoint does not have isochronous High Bandwidth Capability.

1 = If the endpoint has isochronous High Bandwidth Capability.

38.6.11 UDPHS Endpoint Configuration Register

Name: UDPHS_EPTCFGx [x=0..6]

Addresses: 0xFFF78100 [0], 0xFFF78120 [1], 0xFFF78140 [2], 0xFFF78160 [3], 0xFFF78180 [4], 0xFFF781A0 [5], 0xFFF781C0 [6]

Access Type: Read-write

31	30	29	28	27	26	25	24
EPT_MAPD	–	–	–	–	–	–	–

23	22	21	20	19	18	17	16
–	–	–	–	–	–	–	–

15	14	13	12	11	10	9	8
–	–	–	–	–	–	NB_TRANS	

7	6	5	4	3	2	1	0
BK_NUMBER		EPT_TYPE		EPT_DIR	EPT_SIZE		

- **EPT_SIZE: Endpoint Size**

Read and write:

Set this field according to the endpoint size in bytes (see Section 38.5.5 ”Endpoint Configuration”).

Endpoint Size

000	8 bytes
001	16 bytes
010	32 bytes
011	64 bytes
100	128 bytes
101	256 bytes
110	512 bytes
111	1024 bytes(1)

Note: 1. 1024 bytes is only for isochronous endpoint.

- **EPT_DIR: Endpoint Direction**

Read and write:

0 = Clear this bit to configure OUT direction for Bulk, Interrupt and Isochronous endpoints.

1 = Set this bit to configure IN direction for Bulk, Interrupt and Isochronous endpoints.

For Control endpoints this bit has no effect and should be left at zero.

- **EPT_TYPE: Endpoint Type**

Read and write:

Set this field according to the endpoint type (see Section 38.5.5 ”Endpoint Configuration”).

(Endpoint 0 should always be configured as control)

:Endpoint Type

00	Control endpoint
01	Isochronous endpoint
10	Bulk endpoint
11	Interrupt endpoint

- **BK_NUMBER: Number of Banks**

Read and write:

Set this field according to the endpoint's number of banks (see Section 38.5.5 "Endpoint Configuration").

Number of Banks

00	Zero bank, the endpoint is not mapped in memory
01	One bank (bank 0)
10	Double bank (Ping-Pong: bank 0/bank 1)
11	Triple bank (bank 0/bank 1/bank 2)

- **NB_TRANS: Number Of Transaction per Microframe**

Read and Write:

The Number of transactions per microframe is set by software.

Note: Meaningful for high bandwidth isochronous endpoint only.

- **EPT_MAPD: Endpoint Mapped**

Read-only:

0 = The user should reprogram the register with correct values.

1 = Set by hardware when the endpoint size (EPT_SIZE) and the number of banks (BK_NUMBER) are correct regarding:

– the fifo max capacity (FIFO_MAX_SIZE in UDPHS_IPFEATURES register)
– the number of endpoints/banks already allocated
– the number of allowed banks for this endpoint

38.6.12 UDPHS Endpoint Control Enable Register

Name: UDPHS_EPTCTLENBx [x=0..6]

Addresses: 0xFFF78104 [0], 0xFFF78124 [1], 0xFFF78144 [2], 0xFFF78164 [3], 0xFFF78184 [4], 0xFFF781A4 [5], 0xFFF781C4 [6]

Access Type: Write-only

31	30	29	28	27	26	25	24
SHRT_PCKT	–	–	–	–	–	–	–

23	22	21	20	19	18	17	16
–	–	–	–	–	BUSY_BANK	–	–

15	14	13	12	11	10	9	8
NAK_OUT	NAK_IN/ ERR_FLUSH	STALL_SNT/ ERR_CRISO/ ERR_NBTRA	RX_SETUP/ ERR_FL_ISO	TX_PK_RDY/ ERR_TRANS	TX_COMPLT	RX_BK_RDY	ERR_OVFLW

7	6	5	4	3	2	1	0
MDATA_RX	DATAX_RX	–	NYET_DIS	INTDIS_DMA	–	AUTO_VALID	EPT_ENABL

For additional Information, see “UDPHS Endpoint Control Register” on page 839.

- **EPT_ENABL: Endpoint Enable**

0 = No effect.

1 = Enable endpoint according to the device configuration.

- **AUTO_VALID: Packet Auto-Valid Enable**

0 = No effect.

1 = Enable this bit to automatically validate the current packet and switch to the next bank for both IN and OUT transfers.

- **INTDIS_DMA: Interrupts Disable DMA**

0 = No effect.

1 = If set, when an enabled endpoint-originated interrupt is triggered, the DMA request is disabled.

- **NYET_DIS: NYET Disable (Only for High Speed Bulk OUT endpoints)**

0 = No effect.

1 = Forces an ACK response to the next High Speed Bulk OUT transfer instead of a NYET response.

- **DATAX_RX: DATAx Interrupt Enable (Only for high bandwidth Isochronous OUT endpoints)**

0 = No effect.

1 = Enable DATAx Interrupt.

- **MDATA_RX: MDATA Interrupt Enable (Only for high bandwidth Isochronous OUT endpoints)**

0 = No effect.

1 = Enable MDATA Interrupt.

- **ERR_OVFLW: Overflow Error Interrupt Enable**

0 = No effect.

1 = Enable Overflow Error Interrupt.

- **RX_BK_RDY: Received OUT Data Interrupt Enable**

0 = No effect.

1 = Enable Received OUT Data Interrupt.

- **TX_COMPLT: Transmitted IN Data Complete Interrupt Enable**

0 = No effect.

1 = Enable Transmitted IN Data Complete Interrupt.

- **TX_PK_RDY/ERR_TRANS: TX Packet Ready/Transaction Error Interrupt Enable**

0 = No effect.

1 = Enable TX Packet Ready/Transaction Error Interrupt.

- **RX_SETUP/ERR_FL_ISO: Received SETUP/Error Flow Interrupt Enable**

0 = No effect.

1 = Enable RX_SETUP/Error Flow ISO Interrupt.

- **STALL_SNT/ERR_CRISO/ERR_NBTRA: Stall Sent /ISO CRC Error/Number of Transaction Error Interrupt Enable**

0 = No effect.

1 = Enable Stall Sent/Error CRC ISO/Error Number of Transaction Interrupt.

- **NAK_IN/ERR_FLUSH: NAKIN/Bank Flush Error Interrupt Enable**

0 = No effect.

1 = Enable NAKIN/Bank Flush Error Interrupt.

- **NAK_OUT: NAKOUT Interrupt Enable**

0 = No effect.

1 = Enable NAKOUT Interrupt.

- **BUSY_BANK: Busy Bank Interrupt Enable**

0 = No effect.

1 = Enable Busy Bank Interrupt.

- **SHRT_PCKT: Short Packet Send/Short Packet Interrupt Enable**

For OUT endpoints:

0 = No effect.

1 = Enable Short Packet Interrupt.

For IN endpoints:

Guarantees short packet at end of DMA Transfer if the UDPHS_DMACONTROLx register END_B_EN and UDPHS_EPTCTLx register AUTOVALID bits are also set.

38.6.13 UDPHS Endpoint Control Disable Register

Name: UDPHS_EPTCTLDISx [x=0..6]

Addresses: 0xFFF78108 [0], 0xFFF78128 [1], 0xFFF78148 [2], 0xFFF78168 [3], 0xFFF78188 [4], 0xFFF781A8 [5], 0xFFF781C8 [6]

Access Type: Write-only

31	30	29	28	27	26	25	24
SHRT_PCKT	–	–	–	–	–	–	–

23	22	21	20	19	18	17	16
–	–	–	–	–	BUSY_BANK	–	–

15	14	13	12	11	10	9	8
NAK_OUT	NAK_IN/ ERR_FLUSH	STALL_SNT/ ERR_CRISO/ ERR_NBTRA	RX_SETUP/ ERR_FL_ISO	TX_PK_RDY/ ERR_TRANS	TX_COMPLT	RX_BK_RDY	ERR_OVFLW

7	6	5	4	3	2	1	0
MDATA_RX	DATAX_RX	–	NYET_DIS	INTDIS_DMA	–	AUTO_VALID	EPT_DISABL

For additional Information, see “UDPHS Endpoint Control Register” on page 839.

- **EPT_DISABL: Endpoint Disable**

0 = No effect.

1 = Disable endpoint.

- **AUTO_VALID: Packet Auto-Valid Disable**

0 = No effect.

1 = Disable this bit to not automatically validate the current packet.

- **INTDIS_DMA: Interrupts Disable DMA**

0 = No effect.

1 = Disable the “Interrupts Disable DMA”.

- **NYET_DIS: NYET Enable (Only for High Speed Bulk OUT endpoints)**

0 = No effect.

1 = Let the hardware handle the handshake response for the High Speed Bulk OUT transfer.

- **DATAX_RX: DATAx Interrupt Disable (Only for High Bandwidth Isochronous OUT endpoints)**

0 = No effect.

1 = Disable DATAx Interrupt.

- **MDATA_RX: MDATA Interrupt Disable (Only for High Bandwidth Isochronous OUT endpoints)**

0 = No effect.

1 = Disable MDATA Interrupt.

- **ERR_OVFLW: Overflow Error Interrupt Disable**

0 = No effect.

1 = Disable Overflow Error Interrupt.

- **RX_BK_RDY: Received OUT Data Interrupt Disable**

0 = No effect.

1 = Disable Received OUT Data Interrupt.

- **TX_COMPLT: Transmitted IN Data Complete Interrupt Disable**

0 = No effect.

1 = Disable Transmitted IN Data Complete Interrupt.

- **TX_PK_RDY/ERR_TRANS: TX Packet Ready/Transaction Error Interrupt Disable**

0 = No effect.

1 = Disable TX Packet Ready/Transaction Error Interrupt.

- **RX_SETUP/ERR_FL_ISO: Received SETUP/Error Flow Interrupt Disable**

0 = No effect.

1 = Disable RX_SETUP/Error Flow ISO Interrupt.

- **STALL_SNT/ERR_CRISO/ERR_NBTRA: Stall Sent/ISO CRC Error/Number of Transaction Error Interrupt Disable**

0 = No effect.

1 = Disable Stall Sent/Error CRC ISO/Error Number of Transaction Interrupt.

- **NAK_IN/ERR_FLUSH: NAKIN/bank flush error Interrupt Disable**

0 = No effect.

1 = Disable NAKIN/ Bank Flush Error Interrupt.

- **NAK_OUT: NAKOUT Interrupt Disable**

0 = No effect.

1 = Disable NAKOUT Interrupt.

- **BUSY_BANK: Busy Bank Interrupt Disable**

0 = No effect.

1 = Disable Busy Bank Interrupt.

- **SHRT_PCKT: Short Packet Interrupt Disable**

For OUT endpoints:

0 = No effect.

1 = Disable Short Packet Interrupt.

For IN endpoints:

Never automatically add a zero length packet at end of DMA transfer.

38.6.14 UDPHS Endpoint Control Register

Name: UDPHS_EPTCTLx [x=0..6]

Addresses: 0xFFF7810C [0], 0xFFF7812C [1], 0xFFF7814C [2], 0xFFF7816C [3], 0xFFF7818C [4], 0xFFF781AC [5], 0xFFF781CC [6]

Access Type: Read-only

31	30	29	28	27	26	25	24
SHRT_PCKT	–	–	–	–	–	–	–

23	22	21	20	19	18	17	16
–	–	–	–	–	BUSY_BANK	–	–

15	14	13	12	11	10	9	8
NAK_OUT	NAK_IN/ ERR_FLUSH	STALL_SNT/ ERR_CRISO/ ERR_NBTRA	RX_SETUP/ ERR_FL_ISO	TX_PK_RDY/ ERR_TRANS	TX_COMPLT	RX_BK_RDY	ERR_OVFLW

7	6	5	4	3	2	1	0
MDATA_RX	DATAX_RX	–	NYET_DIS	INTDIS_DMA	–	AUTO_VALID	EPT_ENABL

- **EPT_ENABL: Endpoint Enable**

0 = If cleared, the endpoint is disabled according to the device configuration. Endpoint 0 should always be enabled after a hardware or UDPHS bus reset and participate in the device configuration.

1 = If set, the endpoint is enabled according to the device configuration.

- **AUTO_VALID: Packet Auto-Valid Enabled (Not for CONTROL Endpoints)**

Set this bit to automatically validate the current packet and switch to the next bank for both IN and OUT endpoints.

For IN Transfer:

If this bit is set, then the UDPHS_EPTSTAx register TX_PK_RDY bit is set automatically when the current bank is full and at the end of DMA buffer if the UDPHS_DMACONTROLx register END_B_EN bit is set.

The user may still set the UDPHS_EPTSTAx register TX_PK_RDY bit if the current bank is not full, unless the user wants to send a Zero Length Packet by software.

For OUT Transfer:

If this bit is set, then the UDPHS_EPTSTAx register RX_BK_RDY bit is automatically reset for the current bank when the last packet byte has been read from the bank FIFO or at the end of DMA buffer if the UDPHS_DMACONTROLx register END_B_EN bit is set. For example, to truncate a padded data packet when the actual data transfer size is reached.

The user may still clear the UDPHS_EPTSTAx register RX_BK_RDY bit, for example, after completing a DMA buffer by software if UDPHS_DMACONTROLx register END_B_EN bit was disabled or in order to cancel the read of the remaining data bank(s).

- **INTDIS_DMA: Interrupt Disables DMA**

If set, when an enabled endpoint-originated interrupt is triggered, the DMA request is disabled regardless of the UDPHS_IEN register EPT_x bit for this endpoint. Then, the firmware will have to clear or disable the interrupt source or clear this bit if transfer completion is needed.

If the exception raised is associated with the new system bank packet, then the previous DMA packet transfer is normally completed, but the new DMA packet transfer is not started (not requested).

If the exception raised is not associated to a new system bank packet (NAK_IN, NAK_OUT, ERR_FL_ISO...), then the request cancellation may happen at any time and may immediately stop the current DMA transfer.

This may be used, for example, to identify or prevent an erroneous packet to be transferred into a buffer or to complete a DMA buffer by software after reception of a short packet, or to perform buffer truncation on ERR_FL_ISO interrupt for adaptive rate.

- **NYET_DIS: NYET Disable (Only for High Speed Bulk OUT endpoints)**

0 = If clear, this bit lets the hardware handle the handshake response for the High Speed Bulk OUT transfer.

1 = If set, this bit forces an ACK response to the next High Speed Bulk OUT transfer instead of a NYET response.

Note: According to the *Universal Serial Bus Specification, Rev 2.0* (8.5.1.1 NAK Responses to OUT/DATA During PING Protocol), a NAK response to an HS Bulk OUT transfer is expected to be an unusual occurrence.

- **DATAX_RX: DATAx Interrupt Enabled (Only for High Bandwidth Isochronous OUT endpoints)**

0 = No effect.

1 = Send an interrupt when a DATA2, DATA1 or DATA0 packet has been received meaning the whole microframe data payload has been received.

- **MDATA_RX: MDATA Interrupt Enabled (Only for High Bandwidth Isochronous OUT endpoints)**

0 = No effect.

1 = Send an interrupt when an MDATA packet has been received and so at least one packet of the microframe data payload has been received.

- **ERR_OVFLW: Overflow Error Interrupt Enabled**

0 = Overflow Error Interrupt is masked.

1 = Overflow Error Interrupt is enabled.

- **RX_BK_RDY: Received OUT Data Interrupt Enabled**

0 = Received OUT Data Interrupt is masked.

1 = Received OUT Data Interrupt is enabled.

- **TX_COMPLT: Transmitted IN Data Complete Interrupt Enabled**

0 = Transmitted IN Data Complete Interrupt is masked.

1 = Transmitted IN Data Complete Interrupt is enabled.

- **TX_PK_RDY/ERR_TRANS: TX Packet Ready/Transaction Error Interrupt Enabled**

0 = TX Packet Ready/Transaction Error Interrupt is masked.

1 = TX Packet Ready/Transaction Error Interrupt is enabled.

Caution: Interrupt source is active as long as the corresponding UDPHS_EPTSTAx register TX_PK_RDY flag remains low. If there are no more banks available for transmitting after the software has set UDPHS_EPTSTAx/TX_PK_RDY for the last transmit packet, then the interrupt source remains inactive until the first bank becomes free again to transmit at UDPHS_EPTSTAx/TX_PK_RDY hardware clear.

- **RX_SETUP/ERR_FL_ISO: Received SETUP/Error Flow Interrupt Enabled**

0 = Received SETUP/Error Flow Interrupt is masked.

1 = Received SETUP/Error Flow Interrupt is enabled.

- **STALL_SNT/ERR_CRISO/ERR_NBTRA: Stall Sent/ISO CRC Error/Number of Transaction Error Interrupt Enabled**

0 = Stall Sent/ISO CRC error/number of Transaction Error Interrupt is masked.

1 = Stall Sent /ISO CRC error/number of Transaction Error Interrupt is enabled.

- **NAK_IN/ERR_FLUSH: NAKIN/Bank Flush Error Interrupt Enabled**

0 = NAKIN Interrupt is masked.

1 = NAKIN/Bank Flush Error Interrupt is enabled.

- **NAK_OUT: NAKOUT Interrupt Enabled**

0 = NAKOUT Interrupt is masked.

1 = NAKOUT Interrupt is enabled.

- **BUSY_BANK: Busy Bank Interrupt Enabled**

0 = BUSY_BANK Interrupt is masked.

1 = BUSY_BANK Interrupt is enabled.

For OUT endpoints: an interrupt is sent when all banks are busy.

For IN endpoints: an interrupt is sent when all banks are free.

- **SHRT_PCKT: Short Packet Interrupt Enabled**

For OUT endpoints: send an Interrupt when a Short Packet has been received.

0 = Short Packet Interrupt is masked.

1 = Short Packet Interrupt is enabled.

For IN endpoints: a Short Packet transmission is guaranteed upon end of the DMA Transfer, thus signaling a BULK or INTERRUPT end of transfer or an end of isochronous (micro-)frame data, but only if the UDPHS_DMACONTROLx register END_B_EN and UDPHS_EPTCTLx register AUTO_VALID bits are also set.

38.6.15 UDPHS Endpoint Set Status Register

Name: UDPHS_EPTSETSTAx [x=0..6]

Addresses: 0xFFF78114 [0], 0xFFF78134 [1], 0xFFF78154 [2], 0xFFF78174 [3], 0xFFF78194 [4], 0xFFF781B4 [5], 0xFFF781D4 [6]

Access Type: Write-only

31	30	29	28	27	26	25	24
–	–	–	–	–	–	–	–

23	22	21	20	19	18	17	16
–	–	–	–	–	–	–	–

15	14	13	12	11	10	9	8
–	–	–	–	TX_PK_RDY	–	KILL_BANK	–

7	6	5	4	3	2	1	0
–	–	FRCESTALL	–	–	–	–	–

- **FRCESTALL: Stall Handshake Request Set**

0 = No effect.

1 = Set this bit to request a STALL answer to the host for the next handshake

Refer to chapters 8.4.5 (Handshake Packets) and 9.4.5 (Get Status) of the *Universal Serial Bus Specification, Rev 2.0* for more information on the STALL handshake.

- **KILL_BANK: KILL Bank Set (for IN Endpoint)**

0 = No effect.

1 = Kill the last written bank.

- **TX_PK_RDY: TX Packet Ready Set**

0 = No effect.

1 = Set this bit after a packet has been written into the endpoint FIFO for IN data transfers

  – This flag is used to generate a Data IN transaction (device to host).
  – Device firmware checks that it can write a data payload in the FIFO, checking that TX_PK_RDY is cleared.
  – Transfer to the FIFO is done by writing in the “Buffer Address” register.
  – Once the data payload has been transferred to the FIFO, the firmware notifies the UDPHS device setting TX_PK_RDY to one.
  – UDPHS bus transactions can start.
  – TXCOMP is set once the data payload has been received by the host.
  – Data should be written into the endpoint FIFO only after this bit has been cleared.
  – Set this bit without writing data to the endpoint FIFO to send a Zero Length Packet.

38.6.16 UDPHS Endpoint Clear Status Register

Name: UDPHS_EPTCLRSTAx [x=0..6]

Addresses: 0xFFF78118 [0], 0xFFF78138 [1], 0xFFF78158 [2], 0xFFF78178 [3], 0xFFF78198 [4] 0xFFF781B8 [5], 0xFFF781D8 [6]

Access Type: Write-only

31	30	29	28	27	26	25	24
–	–	–	–	–	–	–	–

23	22	21	20	19	18	17	16
–	–	–	–	–	–	–	–

15	14	13	12	11	10	9	8
NAK_OUT	NAK_IN/ ERR_FLUSH	STALL_SNT/ ERR_NBTRA	RX_SETUP/ ERR_FL_ISO	–	TX_COMPLT	RX_BK_RDY	–

7	6	5	4	3	2	1	0
–	TOGGLESQ	FRCESTALL	–	–	–	–	–

- **FRCESTALL: Stall Handshake Request Clear**

0 = No effect.

1 = Clear the STALL request. The next packets from host will not be STALLed.

- **TOGGLESQ: Data Toggle Clear**

0 = No effect.

1 = Clear the PID data of the current bank

For OUT endpoints, the next received packet should be a DATA0.

For IN endpoints, the next packet will be sent with a DATA0 PID.

- **RX_BK_RDY: Received OUT Data Clear**

0 = No effect.

1 = Clear the RX_BK_RDY flag of UDPHS_EPTSTAx.

- **TX_COMPLT: Transmitted IN Data Complete Clear**

0 = No effect.

1 = Clear the TX_COMPLT flag of UDPHS_EPTSTAx.

- **RX_SETUP/ERR_FL_ISO: Received SETUP/Error Flow Clear**

0 = No effect.

1 = Clear the RX_SETUP/ERR_FL_ISO flags of UDPHS_EPTSTAx.

- **STALL_SNT/ERR_NBTRA: Stall Sent/Number of Transaction Error Clear**

0 = No effect.

1 = Clear the STALL_SNT/ERR_NBTRA flags of UDPHS_EPTSTAx.

- **NAK_IN/ERR_FLUSH: NAKIN/Bank Flush Error Clear**

0 = No effect.

1 = Clear the NAK_IN/ERR_FLUSH flags of UDPHS_EPTSTAx.

- **NAK_OUT: NAKOUT Clear**

0 = No effect.

1 = Clear the NAK_OUT flag of UDPHS_EPTSTAx.

38.6.17 UDPHS Endpoint Status Register

Name: UDPHS_EPTSTAx [x=0..6]

Addresses: 0xFFF7811C [0], 0xFFF7813C [1], 0xFFF7815C [2], 0xFFF7817C [3], 0xFFF7819C [4], 0xFFF781BC [5], 0xFFF781DC [6]

Access Type: Read-only

31	30	29	28	27	26	25	24
SHRT_PCKT	BYTE_COUNT						

23	22	21	20	19	18	17	16
BYTE_COUNT				BUSY_BANK_STA		CURRENT_BANK/ CONTROL_DIR	

15	14	13	12	11	10	9	8
NAK_OUT	NAK_IN/ ERR_FLUSH	STALL_SNT/ ERR_CRISO/ ERR_NBTRA	RX_SETUP/ ERR_FL_ISO	TX_PK_RDY/ ERR_TRANS	TX_COMPLT	RX_BK_RDY/ KILL_BANK	ERR_OVFLW

7	6	5	4	3	2	1	0
TOGGLESQ_STA		FRCESTALL	–	–	–	–	–

- **FRCESTALL: Stall Handshake Request**

0 = No effect.

1= If set a STALL answer will be done to the host for the next handshake.

This bit is reset by hardware upon received SETUP.

- **TOGGLESQ_STA: Toggle Sequencing**

Toggle Sequencing:

– **IN endpoint:** It indicates the PID Data Toggle that will be used for the next packet sent. This is not relative to the current bank.

– CONTROL and OUT endpoint:

These bits are set by hardware to indicate the PID data of the current bank:

00	Data0
01	Data1
10	Data2 (only for High Bandwidth Isochronous Endpoint)
11	MData (only for High Bandwidth Isochronous Endpoint)

Note 1: In OUT transfer, the Toggle information is meaningful only when the current bank is busy (Received OUT Data = 1).

Note 2: These bits are updated for OUT transfer:

– A new data has been written into the current bank.

– The user has just cleared the Received OUT Data bit to switch to the next bank.

Note 3: For High Bandwidth Isochronous Out endpoint, it is recommended to check the UDPHS_EPTSTAx/ERR_TRANS bit to know if the toggle sequencing is correct or not.

Note 4: This field is reset to DATA1 by the UDPHS_EPTCLRSTAx register TOGGLESQ bit, and by UDPHS_EPTCTLDISx (disable endpoint).

- **ERR_OVFLW: Overflow Error**

This bit is set by hardware when a new too-long packet is received.

Example: If the user programs an endpoint 64 bytes wide and the host sends 128 bytes in an OUT transfer, then the Overflow Error bit is set.

This bit is updated at the same time as the BYTE_COUNT field.

This bit is reset by UDPHS_EPTRST register EPT_x (reset endpoint) and by UDPHS_EPTCTLDISx (disable endpoint).

- **RX_BK_RDY/KILL_BANK: Received OUT Data/KILL Bank**
  - **Received OUT Data**: (For OUT endpoint or Control endpoint)

This bit is set by hardware after a new packet has been stored in the endpoint FIFO.

This bit is cleared by the device firmware after reading the OUT data from the endpoint.

For multi-bank endpoints, this bit may remain active even when cleared by the device firmware, this if an other packet has been received meanwhile.

Hardware assertion of this bit may generate an interrupt if enabled by the UDPHS_EPTCTLx register RX_BK_RDY bit.

This bit is reset by UDPHS_EPTRST register EPT_x (reset endpoint) and by UDPHS_EPTCTLDISx (disable endpoint).

  - **KILL Bank**: (For IN endpoint)
  - The bank is really cleared or the bank is sent, BUSY_BANK_STA is decremented.
  - The bank is not cleared but sent on the IN transfer, TX_COMPLT
  - The bank is not cleared because it was empty. The user should wait that this bit is cleared before trying to clear another packet.

Note: “Kill a packet” may be refused if at the same time, an IN token is coming and the current packet is sent on the UDPHS line. In this case, the TX_COMPLT bit is set. Take notice however, that if at least two banks are ready to be sent, there is no problem to kill a packet even if an IN token is coming. In fact, in that case, the current bank is sent (IN transfer) and the last bank is killed.

- **TX_COMPLT: Transmitted IN Data Complete**

This bit is set by hardware after an IN packet has been transmitted for isochronous endpoints and after it has been accepted (ACK’ed) by the host for Control, Bulk and Interrupt endpoints.

This bit is reset by UDPHS_EPTRST register EPT_x (reset endpoint), and by UDPHS_EPTCTLDISx (disable endpoint).

- **TX_PK_RDY/ERR_TRANS: TX Packet Ready/Transaction Error**
  - **TX Packet Ready**:

This bit is cleared by hardware, as soon as the packet has been sent for isochronous endpoints, or after the host has acknowledged the packet for Control, Bulk and Interrupt endpoints.

For Multi-bank endpoints, this bit may remain clear even after software is set if another bank is available to transmit.

Hardware clear of this bit may generate an interrupt if enabled by the UDPHS_EPTCTLx register TX_PK_RDY bit.

This bit is reset by UDPHS_EPTRST register EPT_x (reset endpoint), and by UDPHS_EPTCTLDISx (disable endpoint).

  - **Transaction Error**: (For high bandwidth isochronous OUT endpoints) (Read-Only)

This bit is set by hardware when a transaction error occurs inside one microframe.

If one toggle sequencing problem occurs among the n-transactions (n = 1, 2 or 3) inside a microframe, then this bit is still set as long as the current bank contains one “bad” n-transaction. (see “CURRENT_BANK/CONTROL_DIR: Current Bank/Control Direction” on page 848) As soon as the current bank is relative to a new “good” n-transactions, then this bit is reset.

Note1: A transaction error occurs when the toggle sequencing does not respect the *Universal Serial Bus Specification, Rev 2.0* (5.9.2 High Bandwidth Isochronous endpoints) (Bad PID, missing data....)

Note2: When a transaction error occurs, the user may empty all the “bad” transactions by clearing the Received OUT Data flag (RX_BK_RDY).

If this bit is reset, then the user should consider that a new n-transaction is coming.

This bit is reset by UDPHS_EPTRST register EPT_x (reset endpoint), and by UDPHS_EPTCTLDISx (disable endpoint).

- **RX_SETUP/ERR_FL_ISO: Received SETUP/Error Flow**
  - **Received SETUP**: (for Control endpoint only)

This bit is set by hardware when a valid SETUP packet has been received from the host.

It is cleared by the device firmware after reading the SETUP data from the endpoint FIFO.

This bit is reset by UDPHS_EPTRST register EPT_x (reset endpoint), and by UDPHS_EPTCTLDISx (disable endpoint).

  - **Error Flow**: (for isochronous endpoint only)

This bit is set by hardware when a transaction error occurs.

  - Isochronous IN transaction is missed, the micro has no time to fill the endpoint (underflow).
  - Isochronous OUT data is dropped because the bank is busy (overflow).

This bit is reset by UDPHS_EPTRST register EPT_x (reset endpoint) and by UDPHS_EPTCTLDISx (disable endpoint).

- **STALL_SNT/ERR_CRISO/ERR_NBTRA: Stall Sent/CRC ISO Error/Number of Transaction Error**
  - **STALL_SNT**: (for Control, Bulk and Interrupt endpoints)

This bit is set by hardware after a STALL handshake has been sent as requested by the UDPHS_EPTSTAx register FRCESTALL bit.

This bit is reset by UDPHS_EPTRST register EPT_x (reset endpoint) and by UDPHS_EPTCTLDISx (disable endpoint).

  - **ERR_CRISO**: (for Isochronous OUT endpoints) (Read-only)

This bit is set by hardware if the last received data is corrupted (CRC error on data).

This bit is updated by hardware when new data is received (Received OUT Data bit).

  - **ERR_NBTRA**: (for High Bandwidth Isochronous IN endpoints)

This bit is set at the end of a microframe in which at least one data bank has been transmitted, if less than the number of transactions per micro-frame banks (UDPHS_EPTCFGx register NB_TRANS) have been validated for transmission inside this microframe.

This bit is reset by UDPHS_EPTRST register EPT_x (reset endpoint) and by UDPHS_EPTCTLDISx (disable endpoint).

- **NAK_IN/ERR_FLUSH: NAK IN/Bank Flush Error**
  - **NAK_IN**:

This bit is set by hardware when a NAK handshake has been sent in response to an IN request from the Host.

This bit is cleared by software.

– **ERR_FLUSH**: (for High Bandwidth Isochronous IN endpoints)

This bit is set when flushing unsent banks at the end of a microframe.

This bit is reset by UDPHS_EPTRST register EPT_x (reset endpoint) and by EPT_CTL_DISx (disable endpoint).

- **NAK_OUT: NAK OUT**

This bit is set by hardware when a NAK handshake has been sent in response to an OUT or PING request from the Host.

This bit is reset by UDPHS_EPTRST register EPT_x (reset endpoint) and by EPT_CTL_DISx (disable endpoint).

- **CURRENT_BANK/CONTROL_DIR: Current Bank/Control Direction**

– **Current Bank**: (all endpoints except Control endpoint)

These bits are set by hardware to indicate the number of the current bank.

00	Bank 0 (or single bank)
01	Bank 1
10	Bank 2
11	Invalid

Note: The current bank is updated each time the user:

– Sets the TX Packet Ready bit to prepare the next IN transfer and to switch to the next bank.

– Clears the received OUT data bit to access the next bank.

This bit is reset by UDPHS_EPTRST register EPT_x (reset endpoint) and by UDPHS_EPTCTLDISx (disable endpoint).

– **Control Direction**: (for Control endpoint only)

0 = A Control Write is requested by the Host.

1 = A Control Read is requested by the Host.

Note1: This bit corresponds with the 7th bit of the bmRequestType (Byte 0 of the Setup Data).

Note2: This bit is updated after receiving new setup data.

- **BUSY_BANK_STA: Busy Bank Number**

These bits are set by hardware to indicate the number of busy banks.

IN endpoint: it indicates the number of busy banks filled by the user, ready for IN transfer.

OUT endpoint: it indicates the number of busy banks filled by OUT transaction from the Host.

00	All banks are free
01	1 busy bank
10	2 busy banks
11	3 busy banks

- **BYTE_COUNT: UDPHS Byte Count**

Byte count of a received data packet.

This field is incremented after each write into the endpoint (to prepare an IN transfer).

This field is decremented after each reading into the endpoint (OUT transfer).

This field is also updated at RX_BK_RDY flag clear with the next bank.

This field is also updated at TX_PK_RDY flag set with the next bank.

This field is reset by EPT_x of UDPHS_EPTRST register.

- **SHRT_PCKT: Short Packet**

An OUT Short Packet is detected when the receive byte count is less than the configured UDPHS_EPTCFGx register EPT_Size.

This bit is updated at the same time as the BYTE_COUNT field.

This bit is reset by UDPHS_EPTRST register EPT_x (reset endpoint) and by UDPHS_EPTCTLDISx (disable endpoint).

38.6.18 UDPHS DMA Channel Transfer Descriptor

The DMA channel transfer descriptor is loaded from the memory.

Be careful with the alignment of this buffer.

The structure of the DMA channel transfer descriptor is defined by three parameters as described below:

Offset 0:

The address must be aligned: 0xXXXX0

Next Descriptor Address Register: UDPHS_DMANXTDSCx

Offset 4:

The address must be aligned: 0xXXXX4

DMA Channelx Address Register: UDPHS_DMAADDRESSx

Offset 8:

The address must be aligned: 0xXXXX8

DMA Channelx Control Register: UDPHS_DMACONTROLx

To use the DMA channel transfer descriptor, fill the structures with the correct value (as described in the following pages).

Then write directly in UDPHS_DMANXTDSCx the address of the descriptor to be used first.

Then write 1 in the LDNXT_DSC bit of UDPHS_DMACONTROLx (load next channel transfer descriptor). The descriptor is automatically loaded upon Endpointx request for packet transfer.

38.6.19 UDPHS DMA Next Descriptor Address Register

Name: UDPHS_DMANXTDSCx [x = 1..5]

Addresses: 0xFFF78320 [1], 0xFFF78330 [2], 0xFFF78340 [3], 0xFFF78350 [4], 0xFFF78360 [5]

Access Type: Read-write

31	30	29	28	27	26	25	24
NXT_DSC_ADD							

23	22	21	20	19	18	17	16
NXT_DSC_ADD							

15	14	13	12	11	10	9	8
NXT_DSC_ADD							

7	6	5	4	3	2	1	0
NXT_DSC_ADD							

- **NXT_DSC_ADD**

This field points to the next channel descriptor to be processed. This channel descriptor must be aligned, so bits 0 to 3 of the address must be equal to zero.

38.6.20 UDPHS DMA Channel Address Register

Name: UDPHS_DMAADDRESSx [x = 1..5]

Addresses: 0xFFF78324 [1], 0xFFF78334 [2], 0xFFF78344 [3], 0xFFF78354 [4], 0xFFF78364 [5]

Access Type: Read-write

31	30	29	28	27	26	25	24
BUFF_ADD							

23	22	21	20	19	18	17	16
BUFF_ADD							

15	14	13	12	11	10	9	8
BUFF_ADD							

7	6	5	4	3	2	1	0
BUFF_ADD							

- **BUFF_ADD**

This field determines the AHB bus starting address of a DMA channel transfer.

Channel start and end addresses may be aligned on any byte boundary.

The firmware may write this field only when the UDPHS_DMASTATUS register CHANN_ENB bit is clear.

This field is updated at the end of the address phase of the current access to the AHB bus. It is incrementing of the access byte width. The access width is 4 bytes (or less) at packet start or end, if the start or end address is not aligned on a word boundary.

The packet start address is either the channel start address or the next channel address to be accessed in the channel buffer.

The packet end address is either the channel end address or the latest channel address accessed in the channel buffer.

The channel start address is written by software or loaded from the descriptor, whereas the channel end address is either determined by the end of buffer or the UDPHS device, USB end of transfer if the UDPHS_DMACONTROLx register END_TR_EN bit is set.

38.6.21 UDPHS DMA Channel Control Register

Name: UDPHS_DMACONTROLx [x = 1..5]

Addresses: 0xFFF78328 [1], 0xFFF78338 [2], 0xFFF78348 [3], 0xFFF78358 [4], 0xFFF78368 [5]

Access Type: Read-write

31	30	29	28	27	26	25	24
BUFF_LENGTH							

23	22	21	20	19	18	17	16
BUFF_LENGTH							

15	14	13	12	11	10	9	8
–	–	–	–	–	–	–	–

7	6	5	4	3	2	1	0
BURST_LCK	DESC_LD_IT	END_BUFFIT	END_TR_IT	END_B_EN	END_TR_EN	LDNXT_DSC	CHANN_ENB

- **CHANN_ENB (Channel Enable Command)**

0 = DMA channel is disabled at and no transfer will occur upon request. This bit is also cleared by hardware when the channel source bus is disabled at end of buffer.

If the UDPHS_DMACONTROL register LDNXT_DSC bit has been cleared by descriptor loading, the firmware will have to set the corresponding CHANN_ENB bit to start the described transfer, if needed.

If the UDPHS_DMACONTROL register LDNXT_DSC bit is cleared, the channel is frozen and the channel registers may then be read and/or written reliably as soon as both UDPHS_DMASTATUS register CHANN_ENB and CHANN_ACT flags read as 0.

If a channel request is currently serviced when this bit is cleared, the DMA FIFO buffer is drained until it is empty, then the UDPHS_DMASTATUS register CHANN_ENB bit is cleared.

If the LDNXT_DSC bit is set at or after this bit clearing, then the currently loaded descriptor is skipped (no data transfer occurs) and the next descriptor is immediately loaded.

1 = UDPHS_DMASTATUS register CHANN_ENB bit will be set, thus enabling DMA channel data transfer. Then any pending request will start the transfer. This may be used to start or resume any requested transfer.

- **LDNXT_DSC: Load Next Channel Transfer Descriptor Enable (Command)**

0 = No channel register is loaded after the end of the channel transfer.

1 = The channel controller loads the next descriptor after the end of the current transfer, i.e. when the UDPHS_DMASTATUS/CHANN_ENB bit is reset.

If the UDPHS_DMA CONTROL/CHANN_ENB bit is cleared, the next descriptor is immediately loaded upon transfer request.

DMA Channel Control Command Summary

LDNXT_DSC	CHANN_ENB	Description
0	0	Stop now
0	1	Run and stop at end of buffer
1	0	Load next descriptor now
1	1	Run and link at end of buffer

- **END_TR_EN: End of Transfer Enable (Control)**

Used for OUT transfers only.

0 = USB end of transfer is ignored.

1 = UDPHS device can put an end to the current buffer transfer.

When set, a BULK or INTERRUPT short packet or the last packet of an ISOCHRONOUS (micro) frame (DATAX) will close the current buffer and the UDPHS_DMASTATUSx register END_TR_ST flag will be raised.

This is intended for UDPHS non-prenegotiated end of transfer (BULK or INTERRUPT) or ISOCHRONOUS microframe data buffer closure.

- **END_B_EN: End of Buffer Enable (Control)**

0 = DMA Buffer End has no impact on USB packet transfer.

1 = Endpoint can validate the packet (according to the values programmed in the UDPHS_EPTCTLx register AUTO_VALID and SHRT_PCKT fields) at DMA Buffer End, i.e. when the UDPHS_DMASTATUS register BUFF_COUNT reaches 0.

This is mainly for short packet IN validation initiated by the DMA reaching end of buffer, but could be used for OUT packet truncation (discarding of unwanted packet data) at the end of DMA buffer.

- **END_TR_IT: End of Transfer Interrupt Enable**

0 = UDPHS device initiated buffer transfer completion will not trigger any interrupt at UDPHS_STATUSx/END_TR_ST rising.

1 = An interrupt is sent after the buffer transfer is complete, if the UDPHS device has ended the buffer transfer.

Use when the receive size is unknown.

- **END_BUFFIT: End of Buffer Interrupt Enable**

0 = UDPHS_DMA_STATUSx/END_BF_ST rising will not trigger any interrupt.

1 = An interrupt is generated when the UDPHS_DMASTATUSx register BUFF_COUNT reaches zero.

- **DESC_LD_IT: Descriptor Loaded Interrupt Enable**

0 = UDPHS_DMASTATUSx/DESC_LDST rising will not trigger any interrupt.

1 = An interrupt is generated when a descriptor has been loaded from the bus.

- **BURST_LCK: Burst Lock Enable**

0 = The DMA never locks bus access.

1 = USB packets AHB data bursts are locked for maximum optimization of the bus bandwidth usage and maximization of fly-by AHB burst duration.

- **BUFF_LENGTH: Buffer Byte Length (Write-only)**

This field determines the number of bytes to be transferred until end of buffer. The maximum channel transfer size (64 Kbytes) is reached when this field is 0 (default value). If the transfer size is unknown, this field should be set to 0, but the transfer end may occur earlier under UDPHS device control.

When this field is written, The UDPHS_DMASTATUSx register BUFF_COUNT field is updated with the write value.

Note: Bits [31:2] are only writable when issuing a channel Control Command other than “Stop Now”.

Note: For reliability it is highly recommended to wait for both UDPHS_DMASTATUSx register CHAN_ACT and CHAN_ENB flags are at 0, thus ensuring the channel has been stopped before issuing a command other than “Stop Now”.

38.6.22 UDPHS DMA Channel Status Register

Name: UDPHS_DMASTATUSx [x = 1..5]

Addresses: 0xFFF7832C [1], 0xFFF7833C [2], 0xFFF7834C [3], 0xFFF7835C [4], 0xFFF7836C [5]

Access Type: Read-write

31	30	29	28	27	26	25	24
BUFF_COUNT							

23	22	21	20	19	18	17	16
BUFF_COUNT							

15	14	13	12	11	10	9	8
–	–	–	–	–	–	–	–

7	6	5	4	3	2	1	0
–	DESC_LDST	END_BF_ST	END_TR_ST	–	–	CHANN_ACT	CHANN_ENB

- **CHANN_ENB: Channel Enable Status**

0 = If cleared, the DMA channel no longer transfers data, and may load the next descriptor if the UDPHS_DMACONTROLx register LDNXT_DSC bit is set.

When any transfer is ended either due to an elapsed byte count or a UDPHS device initiated transfer end, this bit is automatically reset.

1 = If set, the DMA channel is currently enabled and transfers data upon request.

This bit is normally set or cleared by writing into the UDPHS_DMACONTROLx register CHANN_ENB bit field either by software or descriptor loading.

If a channel request is currently serviced when the UDPHS_DMACONTROLx register CHANN_ENB bit is cleared, the DMA FIFO buffer is drained until it is empty, then this status bit is cleared.

- **CHANN_ACT: Channel Active Status**

0 = The DMA channel is no longer trying to source the packet data.

When a packet transfer is ended this bit is automatically reset.

1 = The DMA channel is currently trying to source packet data, i.e. selected as the highest-priority requesting channel.

When a packet transfer cannot be completed due to an END_BF_ST, this flag stays set during the next channel descriptor load (if any) and potentially until UDPHS packet transfer completion, if allowed by the new descriptor.

- **END_TR_ST: End of Channel Transfer Status**

0 = Cleared automatically when read by software.

1 = Set by hardware when the last packet transfer is complete, if the UDPHS device has ended the transfer.

Valid until the CHANN_ENB flag is cleared at the end of the next buffer transfer.

- **END_BF_ST: End of Channel Buffer Status**

0 = Cleared automatically when read by software.

1 = Set by hardware when the BUFF_COUNT downcount reach zero.

Valid until the CHANN_ENB flag is cleared at the end of the next buffer transfer.

- **DESC_LDST: Descriptor Loaded Status**

0 = Cleared automatically when read by software.

1 = Set by hardware when a descriptor has been loaded from the system bus.

Valid until the CHANN_ENB flag is cleared at the end of the next buffer transfer.

- **BUFF_COUNT: Buffer Byte Count**

This field determines the current number of bytes still to be transferred for this buffer.

This field is decremented from the AHB source bus access byte width at the end of this bus address phase.

The access byte width is 4 by default, or less, at DMA start or end, if the start or end address is not aligned on a word boundary.

At the end of buffer, the DMA accesses the UDPHS device only for the number of bytes needed to complete it.

This field value is reliable (stable) only if the channel has been stopped or frozen (UDPHS_EPTCTLx register NT_DIS_DMA bit is used to disable the channel request) and the channel is no longer active CHANN_ACT flag is 0.

Note: For OUT endpoints, if the receive buffer byte length (BUFF_LENGTH) has been defaulted to zero because the USB transfer length is unknown, the actual buffer byte length received will be 0x10000-BUFF_COUNT.

39. Image Sensor Interface (ISI)

39.1 Description

The Image Sensor Interface (ISI) connects a CMOS-type image sensor to the processor and provides image capture in various formats. It does data conversion, if necessary, before the storage in memory through DMA.

The ISI supports color CMOS image sensor and grayscale image sensors with a reduced set of functionalities.

In grayscale mode, the data stream is stored in memory without any processing and so is not compatible with the LCD controller.

Internal FIFOs on the preview and codec paths are used to store the incoming data. The RGB output on the preview path is compatible with the LCD controller. This module outputs the data in RGB format (LCD compatible) and has scaling capabilities to make it compliant to the LCD display resolution (See Table 39-3 on page 860).

Several input formats such as preprocessed RGB or YCbCr are supported through the data bus interface.

It supports two modes of synchronization:

1. The hardware with ISI_VSYNC and ISI_HSYNC signals
2. The International Telecommunication Union Recommendation *ITU-R BT.656-4* Start-of-Active-Video (SAV) and End-of-Active-Video (EAV) synchronization sequence.

Using EAV/SAV for synchronization reduces the pin count (ISI_VSYNC, ISI_HSYNC not used). The polarity of the synchronization pulse is programmable to comply with the sensor signals.

Table 39-1. I/O Description

Signal	Dir	Description
ISI_VSYNC	IN	Vertical Synchronization
ISI_HSYNC	IN	Horizontal Synchronization
ISI_DATA[11..0]	IN	Sensor Pixel Data
ISI_MCK	OUT	Master Clock Provided to the Image Sensor
ISI_PCK	IN	Pixel Clock Provided by the Image Sensor

39.2 Embedded Characteristics

- ITU-R BT. 601/656 8-bit mode external interface support
- Support for ITU-R BT.656-4 SAV and EAV synchronization
- Vertical and horizontal resolutions up to 2048 x 2048
- Preview Path up to 640*480
- Support for packed data formatting for YCbCr 4:2:2 formats
- Preview scaler to generate smaller size image

Figure 39-1. ISI Connection Example

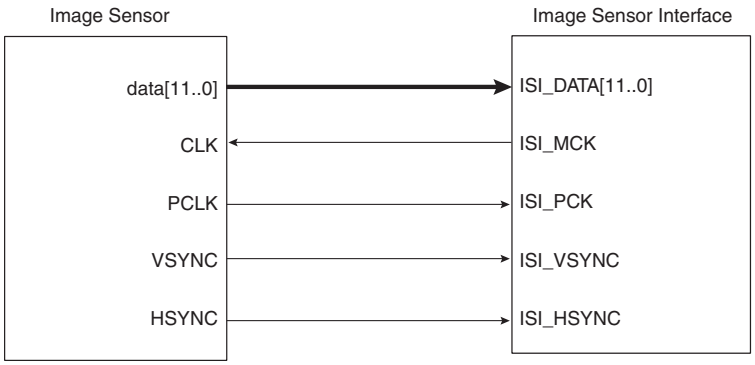

39.3 Block Diagram

Figure 39-2. Image Sensor Interface Block Diagram

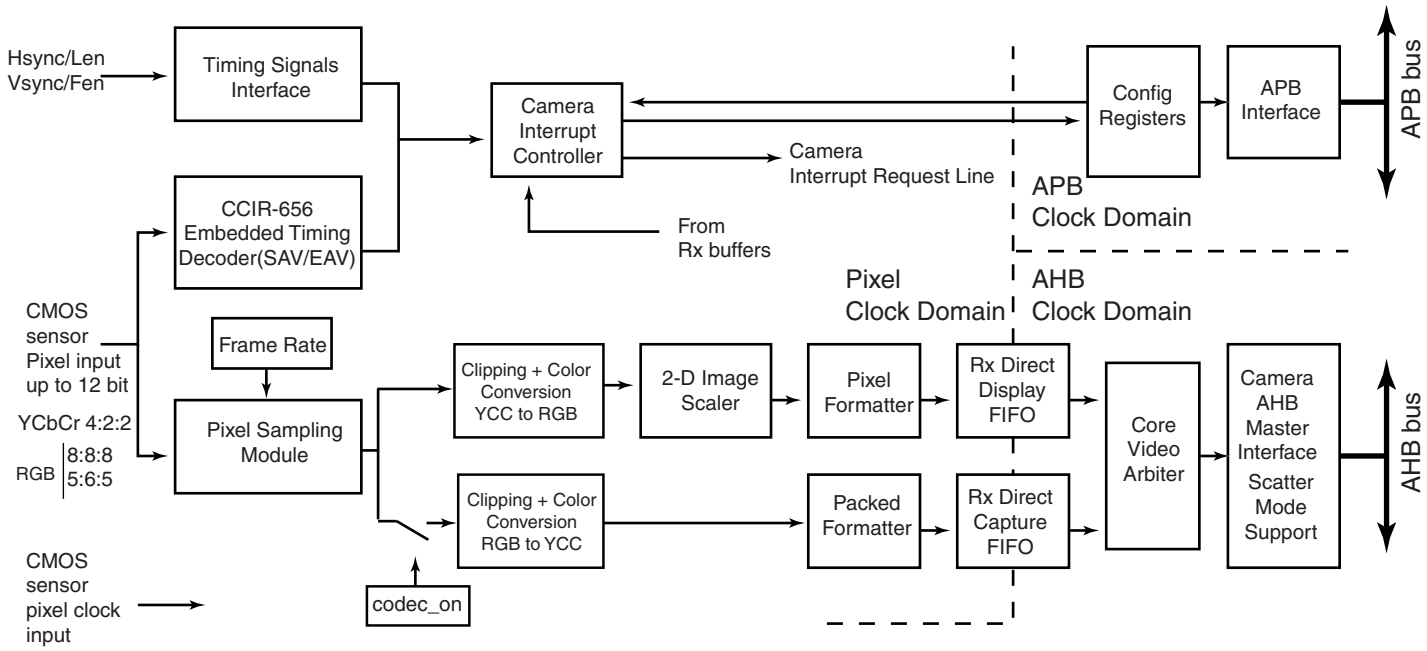

39.4 Functional Description

The Image Sensor Interface (ISI) supports direct connection to the ITU-R BT. 601/656 8-bit mode compliant sensors and up to 12-bit grayscale sensors. It receives the image data stream from the image sensor on the 12-bit data bus.

This module receives up to 12 bits for data, the horizontal and vertical synchronizations and the pixel clock. The reduced pin count alternative for synchronization is supported for sensors that embed SAV (start of active video) and EAV (end of active video) delimiters in the data stream.

The Image Sensor Interface interrupt line is connected to the Advanced Interrupt Controller and can trigger an interrupt at the beginning of each frame and at the end of a DMA frame transfer. If the SAV/EAV synchronization is used, an interrupt can be triggered on each delimiter event.

For 8-bit color sensors, the data stream received can be in several possible formats: YCbCr 4:2:2, RGB 8:8:8, RGB 5:6:5 and may be processed before the storage in memory. The data stream may be sent on both preview path and codec path if the bit ISI_CDC in the ISI_CTRL is one. To optimize the bandwidth, the codec path should be enabled only when a capture is required.

In grayscale mode, the input data stream is stored in memory without any processing. The 12-bit data, which represent the grayscale level for the pixel, is stored in memory one or two pixels per word, depending on the GS_MODE bit in the ISI_CFG2 register. The codec datapath is not available when grayscale image is selected.

A frame rate counter allows users to capture all frames or 1 out of every 2 to 8 frames.

39.4.1 Data Timing

The two data timings using horizontal and vertical synchronization and EAV/SAV sequence synchronization are shown in Figure 39-3 and Figure 39-4.

In the VSYNC/HSYNC synchronization, the valid data is captured with the active edge of the pixel clock (ISI_PCK), after SFD lines of vertical blanking and SLD pixel clock periods delay programmed in the control register.

The ITU-RBT.656-4 defines the functional timing for an 8-bit wide interface.

There are two timing reference signals, one at the beginning of each video data block SAV (0xFF000080) and one at the end of each video data block EAV(0xFF00009D). Only data sent between EAV and SAV is captured. Horizontal blanking and vertical blanking are ignored. Use of the SAV and EAV synchronization eliminates the ISI_VSYNC and ISI_HSYNC signals from the interface, thereby reducing the pin count. In order to retrieve both frame and line synchronization properly, at least one line of vertical blanking is mandatory.

Figure 39-3. HSYNC and VSYNC Synchronization

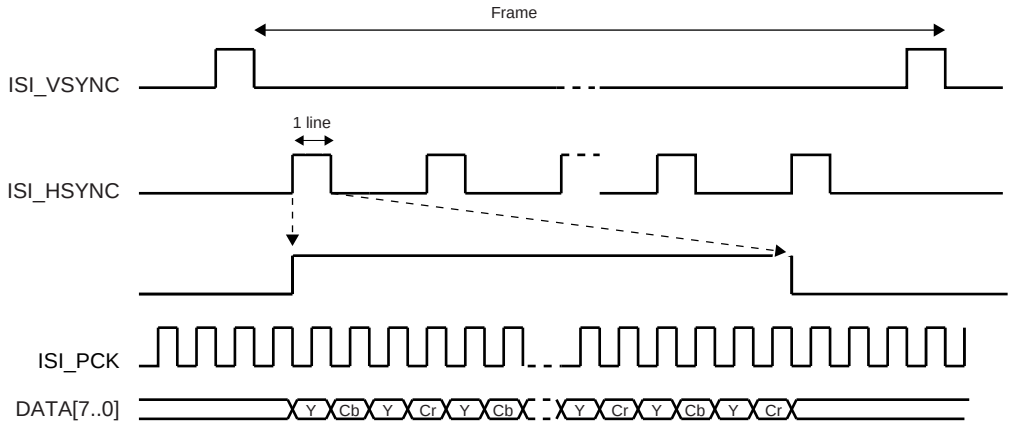

Figure 39-4. SAV and EAV Sequence Synchronization

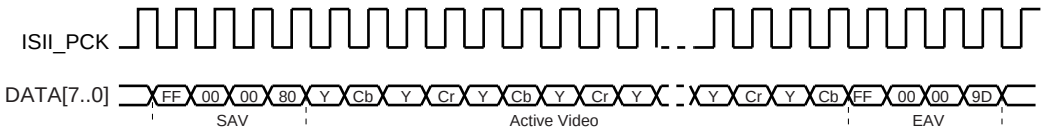

39.4.2 Data Ordering

The RGB color space format is required for viewing images on a display screen preview, and the YCbCr color space format is required for encoding.

All the sensors do not output the YCbCr or RGB components in the same order. The ISI allows the user to program the same component order as the sensor, reducing software treatments to restore the right format.

Table 39-2. Data Ordering in YCbCr Mode

Mode	Byte 0	Byte 1	Byte 2	Byte 3
Default	Cb(i)	Y(i)	Cr(i)	Y(i+1)
Mode1	Cr(i)	Y(i)	Cb(i)	Y(i+1)
Mode2	Y(i)	Cb(i)	Y(i+1)	Cr(i)
Mode3	Y(i)	Cr(i)	Y(i+1)	Cb(i)

Table 39-3. RGB Format in Default Mode, RGB_CFG = 00, No Swap

Mode	Byte	D7	D6	D5	D4	D3	D2	D1	D0
RGB 8:8:8	Byte 0	R7(i)	R6(i)	R5(i)	R4(i)	R3(i)	R2(i)	R1(i)	R0(i)
	Byte 1	G7(i)	G6(i)	G5(i)	G4(i)	G3(i)	G2(i)	G1(i)	G0(i)
	Byte 2	B7(i)	B6(i)	B5(i)	B4(i)	B3(i)	B2(i)	B1(i)	B0(i)
	Byte 3	R7(i+1)	R6(i+1)	R5(i+1)	R4(i+1)	R3(i+1)	R2(i+1)	R1(i+1)	R0(i+1)
RGB 5:6:5	Byte 0	R4(i)	R3(i)	R2(i)	R1(i)	R0(i)	G5(i)	G4(i)	G3(i)
	Byte 1	G2(i)	G1(i)	G0(i)	B4(i)	B3(i)	B2(i)	B1(i)	B0(i)
	Byte 2	R4(i+1)	R3(i+1)	R2(i+1)	R1(i+1)	R0(i+1)	G5(i+1)	G4(i+1)	G3(i+1)
	Byte 3	G2(i+1)	G1(i+1)	G0(i+1)	B4(i+1)	B3(i+1)	B2(i+1)	B1(i+1)	B0(i+1)

Table 39-4. RGB Format, RGB_CFG = 10 (Mode 2), No Swap

Mode	Byte	D7	D6	D5	D4	D3	D2	D1	D0
RGB 5:6:5	Byte 0	G2(i)	G1(i)	G0(i)	R4(i)	R3(i)	R2(i)	R1(i)	R0(i)
	Byte 1	B4(i)	B3(i)	B2(i)	B1(i)	B0(i)	G5(i)	G4(i)	G3(i)
	Byte 2	G2(i+1)	G1(i+1)	G0(i+1)	R4(i+1)	R3(i+1)	R2(i+1)	R1(i+1)	R0(i+1)
	Byte 3	B4(i+1)	B3(i+1)	B2(i+1)	B1(i+1)	B0(i+1)	G5(i+1)	G4(i+1)	G3(i+1)

Table 39-5. RGB Format in Default Mode, RGB_CFG = 00, Swap Activated

Mode	Byte	D7	D6	D5	D4	D3	D2	D1	D0
RGB 8:8:8	Byte 0	R0(i)	R1(i)	R2(i)	R3(i)	R4(i)	R5(i)	R6(i)	R7(i)
	Byte 1	G0(i)	G1(i)	G2(i)	G3(i)	G4(i)	G5(i)	G6(i)	G7(i)
	Byte 2	B0(i)	B1(i)	B2(i)	B3(i)	B4(i)	B5(i)	B6(i)	B7(i)
	Byte 3	R0(i+1)	R1(i+1)	R2(i+1)	R3(i+1)	R4(i+1)	R5(i+1)	R6(i+1)	R7(i+1)
RGB 5:6:5	Byte 0	G3(i)	G4(i)	G5(i)	R0(i)	R1(i)	R2(i)	R3(i)	R4(i)
	Byte 1	B0(i)	B1(i)	B2(i)	B3(i)	B4(i)	G0(i)	G1(i)	G2(i)
	Byte 2	G3(i+1)	G4(i+1)	G5(i+1)	R0(i+1)	R1(i+1)	R2(i+1)	R3(i+1)	R4(i+1)
	Byte 3	B0(i+1)	B1(i+1)	B2(i+1)	B3(i+1)	B4(i+1)	G0(i+1)	G1(i+1)	G2(i+1)

The RGB 5:6:5 input format is processed to be displayed as RGB 5:6:5 format, compliant with the 16-bit mode of the LCD controller.

39.4.3 Clocks

The sensor master clock (ISI_MCK) can be generated either by the Advanced Power Management Controller (APMC) through a Programmable Clock output or by an external oscillator connected to the sensor.

None of the sensors embed a power management controller, so providing the clock by the APMC is a simple and efficient way to control power consumption of the system.

Care must be taken when programming the system clock. The ISI has two clock domains, the system bus clock and the pixel clock provided by sensor. The two clock domains are not synchronized, but the system clock must be faster than pixel clock.

39.4.4 Preview Path

39.4.4.1 Scaling, Decimation (Subsampling)

This module resizes captured 8-bit color sensor images to fit the LCD display format. The resize module performs only downscaling. The same ratio is applied for both horizontal and vertical resize, then a fractional decimation algorithm is applied.

The decimation factor is a multiple of 1/16 and values 0 to 15 are forbidden.

Table 39-6. Decimation Factor

Dec value	0->15	16	17	18	19	...	124	125	126	127
Dec Factor	X	1	1.063	1.125	1.188	...	7.750	7.813	7.875	7.938

Table 39-7. Decimation and Scaler Offset Values

OUTPUT / INPUT		352*288	640*480	800*600	1280*1024	1600*1200	2048*1536
VGA 640*480	F	NA	16	20	32	40	51
QVGA 320*240	F	16	32	40	64	80	102
CIF 352*288	F	16	26	33	56	66	85
QCIF 176*144	F	32	53	66	113	133	170

Example:

Input 1280*1024 Output = 640*480

Hratio = 1280/640 = 2

Vratio = 1024/480 = 2.1333

The decimation factor is 2 so 32/16.

Figure 39-5. Resize Examples

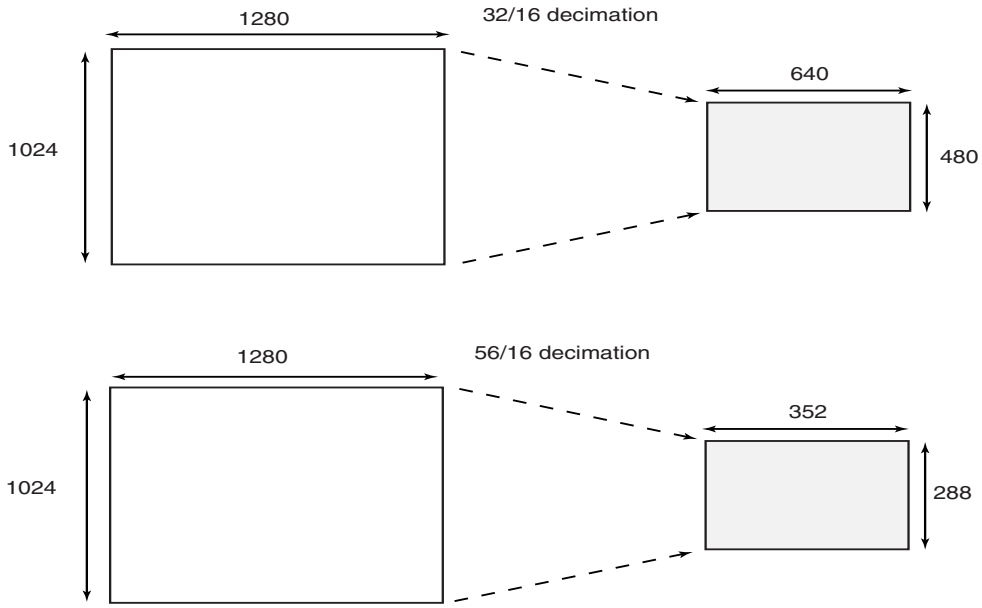

39.4.4.2 *Color Space Conversion*

This module converts YCrCb or YUV pixels to RGB color space. Clipping is performed to ensure that the samples value do not exceed the allowable range. The conversion matrix is defined below and is fully programmable:

$$\begin{bmatrix} R \\ G \\ B \end{bmatrix} = \begin{bmatrix} C_0 & 0 & C_1 \\ C_0 & -C_2 & -C_3 \\ C_0 & C_4 & 0 \end{bmatrix} \times \begin{bmatrix} Y - Y_{off} \\ C_b - C_{boff} \\ C_r - C_{roff} \end{bmatrix}$$

Example of programmable value to convert YCrCb to RGB:

$$\begin{cases} R = 1.164 \cdot (Y - 16) + 1.596 \cdot (C_r - 128) \\ G = 1.164 \cdot (Y - 16) - 0.813 \cdot (C_r - 128) - 0.392 \cdot (C_b - 128) \\ B = 1.164 \cdot (Y - 16) + 2.107 \cdot (C_b - 128) \end{cases}$$

An example of programmable value to convert from YUV to RGB:

$$\begin{cases} R = Y + 1.596 \cdot V \\ G = Y - 0.394 \cdot U - 0.436 \cdot V \\ B = Y + 2.032 \cdot U \end{cases}$$

39.4.4.3 Memory Interface

Preview datapath contains a data formatter that converts 8:8:8 pixel to RGB 5:6:5 format compliant with 16-bit format of the LCD controller. In general, when converting from a color channel with more bits to one with fewer bits, formatter module discards the lower-order bits. Example: Converting from RGB 8:8:8 to RGB 5:6:5, it discards the three LSBs from the red and blue channels, and two LSBs from the green channel. When grayscale mode is enabled, two memory formats are supported. One mode supports 2 pixels per word, and the other mode supports 1 pixel per word.

Table 39-8. Grayscale Memory Mapping Configuration for 12-bit Data

GS_MODE	DATA[31:24]	DATA[23:16]	DATA[15:8]	DATA[7:0]
0	P_0[11:4]	P_0[3:0], 0000	P_1[11:4]	P_1[3:0], 0000
1	P_0[11:4]	P_0[3:0], 0000	0	0

39.4.4.4 FIFO and DMA Features

Both preview and Codec datapaths contain FIFOs. These asynchronous buffers are used to safely transfer formatted pixels from Pixel clock domain to AHB clock domain. A video arbiter is used to manage FIFO thresholds and triggers a relevant DMA request through the AHB master interface. Thus, depending on FIFO state, a specified length burst is asserted. Regarding AHB master interface, it supports Scatter DMA mode through linked list operation. This mode of operation improves flexibility of image buffer location and allows the user to allocate two or more frame buffers. The destination frame buffers are defined by a series of Frame Buffer Descriptors (FBD). Each FBD controls the transfer of one entire frame and then optionally loads a further FBD to switch the DMA operation at another frame buffer address. The FBD is defined by a series of three words. The first one defines the current frame buffer address (named DMA_X_ADDR register), the second defines control information (named DMA_X_CTRL register) and the third defines the next descriptor address (named DMA_X_DSCR). DMA transfer mode with linked list support is available for both codec and preview datapath. The data to be transferred described by an FBD requires several burst accesses. In the example below, the use of 2 ping-pong frame buffers is described.

39.4.4.5 Example

The first FBD, stored at address 0x00030000, defines the location of the first frame buffer. This address is programmed in the ISI user interface DMA_P_DSCR. To enable Descriptor fetch operation DMA_P_CTRL register must be set to 0x00000001. LLI_0 and LLI_1 are the two descriptors of the Linked list.

Destination Address: frame buffer ID0 0x02A000 (LLI_0.DMA_P_ADDR)

Transfer 0 Control Information, fetch and writeback: 0x00000003 (LLI_0.DMA_P_CTRL)

Next FBD address: 0x00030010 (LLI_0.DMA_P_DSCR)

Second FBD, stored at address 0x00030010, defines the location of the second frame buffer.

Destination Address: frame buffer ID1 0x0003A000 (LLI_1.DMA_P_ADDR

Transfer 1 Control information fetch and writeback: 0x00000003 (LLI_1.DMA_P_CTRL)

Next FBD address: 0x00030000, wrapping to first FBD (LLI_1.DMA_P_DSCR)

Using this technique, several frame buffers can be configured through the linked list. Figure 39-6 illustrates a typical three frame buffer application. Frame n is mapped to frame buffer 0, frame n+1 is mapped to frame buffer 1, frame n+2 is mapped to Frame buffer 2, further frames wrap. A codec request occurs, and the full-size 4:2:2 encoded frame is stored in a dedicated memory space.

Figure 39-6. Three Frame Buffers Application and Memory Mapping

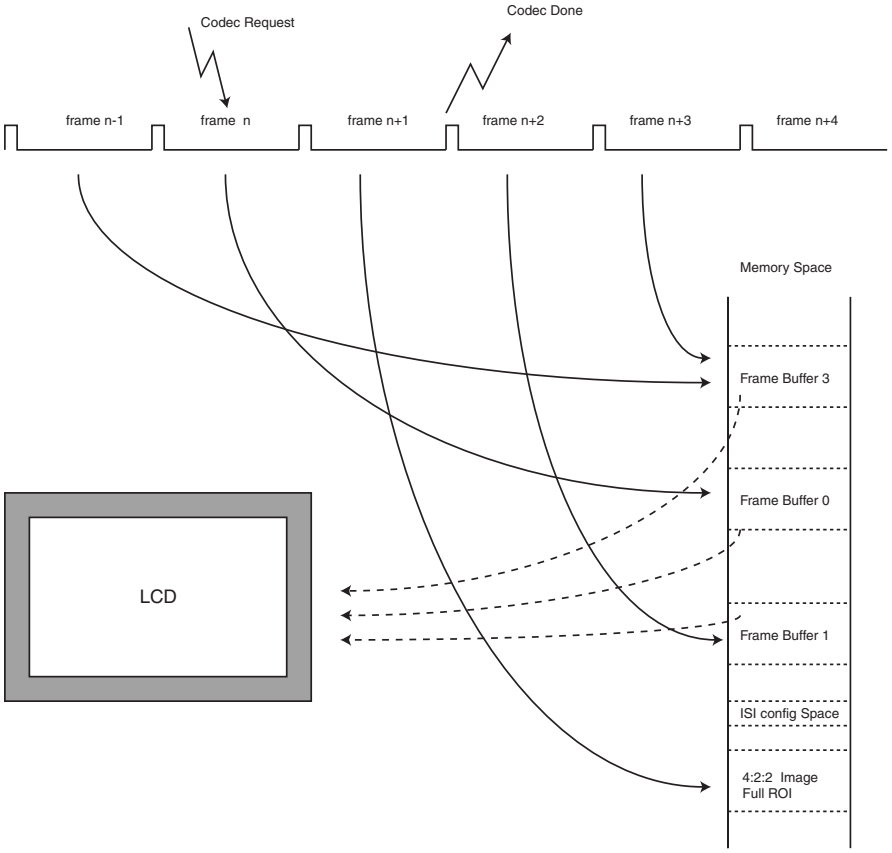

39.4.5 Codec Path

39.4.5.1 Color Space Conversion

Depending on user selection, this module can be bypassed so that input YCrCb stream is directly connected to the format converter module. If the RGB input stream is selected, this module converts RGB to YCrCb color space with the formulas given below:

$$\begin{bmatrix} Y \\ C_r \\ C_b \end{bmatrix} = \begin{bmatrix} C_0 & C_1 & C_2 \\ C_3 & -C_4 & -C_5 \\ -C_6 & -C_7 & C_8 \end{bmatrix} \times \begin{bmatrix} R \\ G \\ B \end{bmatrix} + \begin{bmatrix} Y_{off} \\ Cr_{off} \\ Cb_{off} \end{bmatrix}$$

An example of coefficients is given below:

$$\begin{cases} Y = 0.257 \cdot R + 0.504 \cdot G + 0.098 \cdot B + 16 \\ C_r = 0.439 \cdot R - 0.368 \cdot G - 0.071 \cdot B + 128 \\ C_b = -0.148 \cdot R - 0.291 \cdot G + 0.439 \cdot B + 128 \end{cases}$$

39.4.5.2 Memory Interface

Dedicated FIFOs are used to support packed memory mapping. YCrCb pixel components are sent in a single 32-bit word in a contiguous space (packed). Data is stored in the order of natural scan lines. Planar mode is not supported.

39.4.5.3 DMA Features

Like preview datapath, codec datapath DMA mode uses linked list operation.

39.5 Image Sensor Interface (ISI) User Interface

Table 39-9. I Register Mapping

Offset	Register Name	Register	Access	Reset Value
0x00	ISI Configuration 1 Register	ISI_CFG1	Read-write	0x00000000
0x04	ISI Configuration 2 Register	ISI_CFG2	Read-write	0x00000000
0x08	ISI Preview Size Register	ISI_PSIZE	Read-write	0x00000000
0x0C	ISI Preview Decimation Factor Register	ISI_PDECF	Read-write	0x00000010
0x10	ISI CSC YCrCb To RGB Set 0 Register	ISI_Y2R_SET0	Read-write	0x6832cc95
0x14	ISI CSC YCrCb To RGB Set 1 Register	ISI_Y2R_SET1	Read-write	0x00007102
0x18	ISI CSC RGB To YCrCb Set 0 Register	ISI_R2Y_SET0	Read-write	0x01324145
0x1C	ISI CSC RGB To YCrCb Set 1 Register	ISI_R2Y_SET1	Read-write	0x01245e38
0x20	ISI CSC RGB To YCrCb Set 2 Register	ISI_R2Y_SET2	Read-write	0x01384a4b
0x24	ISI Control Register	ISI_CTRL	Write	0x00000000
0x28	ISI Status Register	ISI_STATUS	Read	0x00000000
0x2C	ISI Interrupt Enable Register	ISI_INTEN	Write	0x00000000
0x30	ISI Interrupt Disable Register	ISI_INTDIS	Write	0x00000000
0x34	ISI Interrupt Mask Register	ISI_INTMASK	Read	0x00000000
0x38	DMA Channel Enable Register	DMA_CHER	Write	0x00000000
0x3C	DMA Channel Disable Register	DMA_CHDR	Write	0x00000000
0x40	DMA Channel Status Register	DMA_CHSR	Read	0x00000000
0x44	DMA Preview Base Address Register	DMA_P_ADDR	Read-write	0x00000000
0x48	DMA Preview Control Register	DMA_P_CTRL	Read-write	0x00000000
0x4C	DMA Preview Descriptor Address Register	DMA_P_DSCR	Read-write	0x00000000
0x50	DMA Codec Base Address Register	DMA_C_ADDR	Read-write	0x00000000
0x54	DMA Codec Control Register	DMA_C_CTRL	Read-write	0x00000000
0x58	DMA Codec Descriptor Address Register	DMA_C_DSCR	Read-write	0x00000000
0xE4	Write Protection Control Register	ISI_WPCR	Read-write	0x00000000
0xE8	Write Protection Status Register	ISI_WPSR	Read	0x00000000
0x44-0xF8	Reserved	–	–	–
0xFC	Reserved	–	–	–

Note: Several parts of the ISI controller use the pixel clock provided by the image sensor (ISI_PCK). Thus the user must first program the image sensor to provide this clock (ISI_PCK) before programming the Image Sensor Controller.

39.5.1 ISI Configuration 1 Register

Register Name: ISI_CFG1

Access Type: Read-write

Reset Value: 0x00000000

31	30	29	28	27	26	25	24
SFD							

23	22	21	20	19	18	17	16
SLD							

15	14	13	12	11	10	9	8
–	THMASK		FULL	DISCR	FRATE		

7	6	5	4	3	2	1	0
CRC_SYNC	EMB_SYNC	–	PIXCLK_POL	VSYNC_POL	HSYNC_POL	–	–

- **HSYNC_POL: Horizontal Synchronization Polarity**

0: HSYNC active high.

1: HSYNC active low.

- **VSYNC_POL: Vertical Synchronization Polarity**

0: VSYNC active high.

1: VSYNC active low.

- **PIXCLK_POL: Pixel Clock Polarity**

0: Data is sampled on rising edge of pixel clock.

1: Data is sampled on falling edge of pixel clock.

- **EMB_SYNC: Embedded Synchronization**

0: Synchronization by HSYNC, VSYNC.

1: Synchronization by embedded synchronization sequence SAV/EAV.

- **CRC_SYNC: Embedded Synchronization Correction**

0: No CRC correction is performed on embedded synchronization.

1: CRC correction is performed. if the correction is not possible, the current frame is discarded and the CRC_ERR is set in the status register.

- **FRATE: Frame Rate [0..7]**

0: All the frames are captured, else one frame every FRATE+1 is captured.

- **DISCR: Disable Codec Request**

0 = Codec datapath DMA interface requires a request to restart.

1 = Codec datapath DMA automatically restarts.

- **FULL: Full Mode is Allowed**

1: Both codec and preview datapaths are working simultaneously.

- **THMASK: Threshold Mask**

0: Only 4 beats AHB burst are allowed.

1: Only 4 and 8 beats AHB burst are allowed.

2: 4, 8 and 16 beats AHB burst are allowed.

- **SLD: Start of Line Delay**

SLD pixel clock periods to wait before the beginning of a line.

- **SFD: Start of Frame Delay**

SFD lines are skipped at the beginning of the frame.

39.5.2 ISI Configuration 2 Register

Register Name: ISI_CFG2

Access Type: Read-write

Reset Value: 0x00000000

31	30	29	28	27	26	25	24
RGB_CFG		YCC_SWAP		-	IM_HSIZE		

23	22	21	20	19	18	17	16
IM_HSIZE							

15	14	13	12	11	10	9	8
COL_SPACE	RGB_SWAP	GRAYSCALE	RGB_MODE	GS_MODE	IM_VSIZE		

7	6	5	4	3	2	1	0
IM_VSIZE							

- **IM_VSIZE: Vertical Size of the Image Sensor [0..2047]:**

Vertical size = IM_VSIZE + 1.

- **GS_MODE:**

0: 2 pixels per word.

1: 1 pixel per word.

- **RGB_MODE: RGB Input Mode:**

0: RGB 8:8:8 24 bits.

1: RGB 5:6:5 16 bits.

- **GRAYSCALE:**

0: Grayscale mode is disabled.

1: Input image is assumed to be grayscale coded.

- **RGB_SWAP:**

0: D7 -> R7.

1: D0 -> R7.

The RGB_SWAP has no effect when the grayscale mode is enabled.

- **COL_SPACE: Color Space for the Image Data**

0: YCbCr.

1: RGB.

- **IM_HSIZE: Horizontal Size of the Image Sensor [0..2047]**

Horizontal size = IM_HSIZE + 1.

- **YCC_SWAP: Defines the YCC Image Data**

YCC_SWAP	Byte 0	Byte 1	Byte 2	Byte 3
00: Default	Cb(i)	Y(i)	Cr(i)	Y(i+1)
01: Mode1	Cr(i)	Y(i)	Cb(i)	Y(i+1)
10: Mode2	Y(i)	Cb(i)	Y(i+1)	Cr(i)
11: Mode3	Y(i)	Cr(i)	Y(i+1)	Cb(i)

- **RGB_CFG: Defines RGB Pattern when RGB_MODE is set to 1**

RGB_CFG	Byte 0	Byte 1	Byte 2	Byte 3
00: Default	R/G(MSB)	G(LSB)/B	R/G(MSB)	G(LSB)/B
01: Mode1	B/G(MSB)	G(LSB)/R	B/G(MSB)	G(LSB)/R
10: Mode2	G(LSB)/R	B/G(MSB)	G(LSB)/R	B/G(MSB)
11: Mode3	G(LSB)/B	R/G(MSB)	G(LSB)/B	R/G(MSB)

If RGB_MODE is set to RGB 8:8:8, then RGB_CFG = 0 implies RGB color sequence, else it implies BGR color sequence.

39.5.3 ISI Preview Register

Register Name: ISI_PSIZE

Access Type: Read-write

Reset Value: 0x00000000

31	30	29	28	27	26	25	24
–	–	–	–	–	–	PREV_HSIZE	

23	22	21	20	19	18	17	16
PREV_HSIZE							

15	14	13	12	11	10	9	8
–	–	–	–	–	–	PREV_VSIZE	

7	6	5	4	3	2	1	0
PREV_VSIZE							

- **PREV_VSIZE: Vertical Size for the Preview Path**

Vertical Preview size = PREV_VSIZE + 1 (480 max only in RGB mode).

- **PREV_HSIZE: Horizontal Size for the Preview Path**

Horizontal Preview size = PREV_HSIZE + 1 (640 max only in RGB mode).

39.5.4 ISI Preview Decimation Factor Register

Register Name: ISI_PDECF

Access Type: Read-write

Reset Value: 0x00000010

31	30	29	28	27	26	25	24
–	–	–	–	–	–	–	–

23	22	21	20	19	18	17	16
–	–	–	–	–	–	–	–

15	14	13	12	11	10	9	8
–	–	–	–	–	–	–	–

7	6	5	4	3	2	1	0
DEC_FACTOR							

- **DEC_FACTOR: Decimation Factor**

DEC_FACTOR is 8-bit width, range is from 16 to 255. Values from 0 to 16 do not perform any decimation.

39.5.5 ISI Color Space Conversion YCrCb to RGB Set 0 Register

Register Name: ISI_Y2R_SET0

Access Type: Read-write

Reset Value: 0x6832cc95

31	30	29	28	27	26	25	24
C3							

23	22	21	20	19	18	17	16
C2							

15	14	13	12	11	10	9	8
C1							

7	6	5	4	3	2	1	0
C0							

- **C0: Color Space Conversion Matrix Coefficient C0**

C0 element default step is 1/128, ranges from 0 to 1.9921875.

- **C1: Color Space Conversion Matrix Coefficient C1**

C1 element default step is 1/128, ranges from 0 to 1.9921875.

- **C2: Color Space Conversion Matrix Coefficient C2**

C2 element default step is 1/128, ranges from 0 to 1.9921875.

- **C3: Color Space Conversion Matrix Coefficient C3**

C3 element default step is 1/128, ranges from 0 to 1.9921875.

39.5.6 ISI Color Space Conversion YCrCb to RGB Set 1 Register

Register Name: ISI_Y2R_SET1

Access Type: Read-write

Reset Value: 0x00007102

31	30	29	28	27	26	25	24
–	–	–	–	–	–	–	–

23	22	21	20	19	18	17	16
–	–	–	–	–	–	–	–

15	14	13	12	11	10	9	8
–	Cboff	Croff	Yoff	–	–	–	C4

C4

- **C4: Color Space Conversion Matrix Coefficient C4**

C4 element default step is 1/128, ranges from 0 to 3.9921875.

- **Yoff: Color Space Conversion Luminance Default Offset**

0: No offset.

1: Offset = 128.

- **Croff: Color Space Conversion Red Chrominance Default Offset**

0: No offset.

1: Offset = 16.

- **Cboff: Color Space Conversion Blue Chrominance Default Offset**

0: No offset.

1: Offset = 16.

39.5.7 ISI Color Space Conversion RGB to YCrCb Set 0 Register

Register Name: ISI_R2Y_SET0

Access Type: Read-write

Reset Value: 0x01324145

31	30	29	28	27	26	25	24
–	–	–	–	–	–	–	Roff

23	22	21	20	19	18	17	16
C2							

15	14	13	12	11	10	9	8
C1							

7	6	5	4	3	2	1	0
C0							

- **C0: Color Space Conversion Matrix Coefficient C0**

C0 element default step is 1/256, from 0 to 0.49609375.

- **C1: Color Space Conversion Matrix Coefficient C1**

C1 element default step is 1/128, from 0 to 0.9921875.

- **C2: Color Space Conversion Matrix Coefficient C2**

C2 element default step is 1/512, from 0 to 0.2480468875.

- **Roff: Color Space Conversion Red Component Offset**

0: No offset.

1: Offset = 16.

39.5.8 ISI Color Space Conversion RGB to YCrCb Set 1 Register

Register Name: ISI_R2Y_SET1

Access Type: Read-write

Reset Value: 0x01245e38

31	30	29	28	27	26	25	24
–	–	–	–	–	–	–	Goff

23	22	21	20	19	18	17	16
C5							

15	14	13	12	11	10	9	8
C4							

7	6	5	4	3	2	1	0
C3							

- **C3: Color Space Conversion Matrix Coefficient C3**

C0 element default step is 1/128, ranges from 0 to 0.9921875.

- **C4: Color Space Conversion Matrix Coefficient C4**

C1 element default step is 1/256, ranges from 0 to 0.49609375.

- **C5: Color Space Conversion Matrix Coefficient C5**

C1 element default step is 1/512, ranges from 0 to 0.2480468875.

- **Goff: Color Space Conversion Green Component Offset**

0: No offset.

1: Offset = 128.

39.5.9 ISI Color Space Conversion RGB to YCrCb Set 2 Register

Register Name: ISI_R2Y_SET2

Access Type: Read-write

Reset Value: 0x01384a4b

31	30	29	28	27	26	25	24
–	–	–	–	–	–	–	Boff

23	22	21	20	19	18	17	16
C8							

15	14	13	12	11	10	9	8
C7							

7	6	5	4	3	2	1	0
C6							

- **C6: Color Space Conversion Matrix Coefficient C6**

C6 element default step is 1/512, ranges from 0 to 0.2480468875.

- **C7: Color Space Conversion Matrix Coefficient C7**

C7 element default step is 1/256, ranges from 0 to 0.49609375.

- **C8: Color Space Conversion Matrix Coefficient C8**

C8 element default step is 1/128, ranges from 0 to 0.9921875.

- **Boff: Color Space Conversion Blue Component Offset**

0: No offset.

1: Offset = 128.

39.5.10 ISI Control Register

Register Name: ISI_CTRL

Access Type: Write

Reset Value: 0x00000000

31	30	29	28	27	26	25	24
–	–	–	–	–	–	–	–

23	22	21	20	19	18	17	16
–	–	–	–	–	–	–	–

15	14	13	12	11	10	9	8
–	–	–	–	–	–	–	ISI_CDC

7	6	5	4	3	2	1	0
–	–	–	–	–	ISI_SRST	ISI_DIS	ISI_EN

- **ISI_EN: ISI Module Enable Request**

Write one to this field to enable the module. Software must poll ENABLE field in the ISI_STATUS register to verify that the command has successfully completed.

- **ISI_DIS: ISI Module Disable Request**

Write one to this field to disable the module. If both ISI_EN and ISI_DIS are asserted at the same time, the disable request is not taken into account. Software must poll DIS_DONE field in the ISI_STATUS register to verify that the command has successfully completed.

- **ISI_SRST: ISI Software Reset Request**

Write one to this field to request a software reset of the module. Software must poll SRST field in the ISI_STATUS register to verify that the software request command has terminated.

- **ISI_CDC: ISI Codec Request**

Write one to this field to enable the codec datapath and capture a Full resolution Frame. A new request cannot be taken into account while CDC_PND bit is active in the ISI_STATUS register.

39.5.11 ISI Status Register

Register Name: ISI_SR

Access Type: Read

Reset Value: 0x00000000

31	30	29	28	27	26	25	24
–	–	–	–	FR_OVR	CRC_ERR	C_OVR	P_OVR

23	22	21	20	19	18	17	16
–	–	–	–	SIP	–	CXFR_DONE	PXFR_DONE

15	14	13	12	11	10	9	8
–	–	–	–	–	VSYNC	–	CDC_PND

7	6	5	4	3	2	1	0
–	–	–	–	–	SRST	DIS_DONE	ENABLE

- **ENABLE (this bit is a status bit)**

0: Module is enabled.

1: Module is disabled.

- **DIS_DONE: Module Disable Request has Terminated**

1: Disable request has completed. This flag is reset after a read operation.

- **SRST: Module Software Reset Request has Terminated**

1: Software reset request has completed. This flag is reset after a read operation.

- **CDC_PND: Pending Codec Request (this bit is a status bit)**

0: Indicates that no Codec request is pending.

1: Indicates that the request has been taken into account but cannot be serviced within the current frame. The operation is postponed to the next frame.

- **VSYNC: Vertical Synchronization**

1: Indicates that a Vertical synchronization has been detected since the last read of the status register.

- **PXFR_DONE: Preview DMA Transfer has Terminated.**

When set to one, this bit indicates that the DATA transfer on the preview channel has completed. This flag is reset after a read operation.

- **CXFR_DONE: Codec DMA Transfer has Terminated.**

When set to one, this bit indicates that the DATA transfer on the codec channel has completed. This flag is reset after a read operation.

- **SIP: Synchronization in Progress (this is a status bit)**

When the status of the preview or codec DMA channel is modified, a minimum amount of time is required to perform the clock domain synchronization. This bit is set when this operation occurs. No modification of the channel status is allowed when this bit is set, to guarantee data integrity.

- **P_OVR: Preview Datapath Overflow**

0: No overflow

1: An overrun condition has occurred in input FIFO on the preview path. The overrun happens when the FIFO is full and an attempt is made to write a new sample to the FIFO. This flag is reset after a read operation.

- **C_OVR: Codec Datapath Overflow**

0: No overflow

1: An overrun condition has occurred in input FIFO on the codec path. The overrun happens when the FIFO is full and an attempt is made to write a new sample to the FIFO. This flag is reset after a read operation.

- **CRC_ERR: CRC Synchronization Error**

0: No CRC error in the embedded synchronization frame (SAV/EAV)

1: The CRC_SYNC is enabled in the control register and an error has been detected and not corrected. The frame is discarded and the ISI waits for a new one. This flag is reset after a read operation.

- **FR_OVR: Frame Rate Overrun**

0: No frame overrun.

1: Frame overrun, the current frame is being skipped because a vsync signal has been detected while flushing FIFOs. This flag is reset after a read operation.

39.5.12 ISI Interrupt Enable Register

Register Name: ISI_IER

Access Type: Read-write

Reset Value: 0x0

31	30	29	28	27	26	25	24
–	–	–	–	FR_OVR	CRC_ERR	C_OVR	P_OVR

23	22	21	20	19	18	17	16
–	–	–	–	–	–	CXFR_DONE	PXFR_DONE

15	14	13	12	11	10	9	8
–	–	–	–	–	VSYNC	–	–

7	6	5	4	3	2	1	0
–	–	–	–	–	SRST	DIS_DONE	–

- **DIS_DONE: Disable Done Interrupt Enable**
- **SRST: Software Reset Interrupt Enable**
- **VSYNC: Vertical Synchronization Interrupt Enable**
- **PXFR_DONE: Preview DMA Transfer Done Interrupt Enable**
- **CXFR_DONE: Codec DMA Transfer Done Interrupt Enable**
- **P_OVR: Preview Datapath Overflow Interrupt Enable**
- **C_OVR: Codec Datapath Overflow Interrupt Enable**
- **CRC_ERR: Embedded Synchronization CRC Error Interrupt Enable**
- **FR_OVR: Frame Rate Overflow Interrupt Enable**

39.5.13 ISI Interrupt Disable Register

Register Name: ISI_IDR

Access Type: Read-write

Reset Value: 0x0

31	30	29	28	27	26	25	24
–	–	–	–	FR_OVR	CRC_ERR	C_OVR	P_OVR

23	22	21	20	19	18	17	16
–	–	–	–	–	–	CXFR_DONE	PXFR_DONE

15	14	13	12	11	10	9	8
–	–	–	–	–	VSYNC	–	–

7	6	5	4	3	2	1	0
–	–	–	–	–	SRST	DIS_DONE	–

- **DIS_DONE: Disable Done Interrupt Disable**
- **SRST: Software Reset Interrupt Disable**
- **VSYNC: Vertical Synchronization Interrupt Disable**
- **PXFR_DONE: Preview DMA Transfer Done Interrupt Disable**
- **CXFR_DONE: Codec DMA Transfer Done Interrupt Disable**
- **P_OVR: Preview Datapath Overflow Interrupt Disable**
- **C_OVR: Codec Datapath Overflow Interrupt Disable**
- **CRC_ERR: Embedded Synchronization CRC Error Interrupt Disable**
- **FR_OVR: Frame Rate Overflow Interrupt Disable**

39.5.14 ISI Interrupt Mask Register

Register Name: ISI_IMR

Access Type: Read-write

Reset Value: 0x0

31	30	29	28	27	26	25	24
–	–	–	–	FR_OVR	CRC_ERR	C_OVR	P_OVR

23	22	21	20	19	18	17	16
–	–	–	–	–	–	CXFR_DONE	PXFR_DONE

15	14	13	12	11	10	9	8
–	–	–	–	–	VSYNC	–	–

7	6	5	4	3	2	1	0
–	–	–	–	–	SRST	DIS_DONE	–

- **DIS_DONE: Module Disable Operation Completed**

0: The disable completed interrupt is disabled.

1: The disable completed interrupt is enabled.

- **SRST: Software Reset Completed**

0: The software reset completed interrupt is disabled.

1: The software reset completed interrupt is enabled.

- **VSYNC: Vertical Synchronization**

0: The vertical synchronization interrupt is enabled.

1: The vertical synchronization interrupt is disabled.

- **PXFR_DONE: Preview DMA Transfer Interrupt**

0: The Preview DMA transfer completed interrupt is enabled

1: The Preview DMA transfer completed interrupt is disabled

- **CXFR_DONE: Codec DMA Transfer Interrupt**

0: The Codec DMA transfer completed interrupt is enabled

1: The Codec DMA transfer completed interrupt

- **P_OVR: FIFO Preview Overflow**

0: The preview FIFO overflow interrupt is disabled.

1: The preview FIFO overflow interrupt is enabled.

- **P_OVR: FIFO Codec Overflow**

0: The codec FIFO overflow interrupt is disabled.

1: The codec FIFO overflow interrupt is enabled.

- **CRC_ERR: CRC Synchronization Error**

0: The crc error interrupt is disabled.

1: The crc error interrupt is enabled.

- **FR_OVR: Frame Rate Overrun**

0: The frame overrun interrupt is disabled.

1: The frame overrun interrupt is enabled.

39.5.15 DMA Channel Enable Register

Register Name: DMA_CHER

Access Type: Write

Reset Value: 0x00000000

31	30	29	28	27	26	25	24
–	–	–	–	–	–	–	–

23	22	21	20	19	18	17	16
–	–	–	–	–	–	–	–

15	14	13	12	11	10	9	8
–	–	–	–	–	–	–	–

7	6	5	4	3	2	1	0
–	–	–	–	–	–	C_CH_EN	P_CH_EN

- **P_CH_EN: Preview Channel Enable**

Write one to this field to enable the preview DMA channel.

- **C_CH_EN: Codec Channel Enable**

Write one to this field to enable the codec DMA channel.

39.5.16 DMA Channel Disable Register

Register Name: DMA_CHDR

Access Type: Write

Reset Value: 0x00000000

31	30	29	28	27	26	25	24
–	–	–	–	–	–	–	–

23	22	21	20	19	18	17	16
–	–	–	–	–	–	–	–

15	14	13	12	11	10	9	8
–	–	–	–	–	–	–	–

7	6	5	4	3	2	1	0
–	–	–	–	–	–	C_CH_DIS	P_CH_DIS

- **P_CH_DIS**

Write one to this field to disable the channel. Poll P_CH_S in DMA_CHSR to verify that the preview channel status has been successfully modified.

- **C_CH_DIS**

Write one to this field to disabled the channel. Poll C_CH_S in DMA_CHSR to verify that the codec channel status has been successfully modified.

39.5.17 DMA Channel Status Register

Register Name: DMA_CHSR

Access Type: Read

Reset Value: 0x00000000

31	30	29	28	27	26	25	24
–	–	–	–	–	–	–	–

23	22	21	20	19	18	17	16
–	–	–	–	–	–	–	–

15	14	13	12	11	10	9	8
–	–	–	–	–	–	–	–

7	6	5	4	3	2	1	0
–	–	–	–	–	–	C_CH_S	P_CH_S

- **P_CH_S:**

0: indicates that the Preview DMA channel is disabled

1: indicates that the Preview DMA channel is enabled.

- **C_CH_S:**

0: indicates that the Codec DMA channel is disabled.

1: indicates that the Codec DMA channel is enabled.

39.5.18 DMA Preview Base Address Register

Register Name: DMA_P_ADDR

Access Type: Read-write

Reset Value: 0x00000000

31	30	29	28	27	26	25	24
P_ADDR							

23	22	21	20	19	18	17	16
P_ADDR							

15	14	13	12	11	10	9	8
P_ADDR							

7	6	5	4	3	2	1	0
P_ADDR						–	–

- **P_ADDR: Preview Image Base Address. (This address is word aligned.)**

39.5.19 DMA Preview Control Register

Register Name: DMA_P_CTRL

Access Type: Read-write

Reset Value: 0x00000000

31	30	29	28	27	26	25	24
–	–	–	–	–	–	–	–

23	22	21	20	19	18	17	16
–	–	–	–	–	–	–	–

15	14	13	12	11	10	9	8
–	–	–	–	–	–	–	–

7	6	5	4	3	2	1	0
–	–	–	–	P_DONE	P_IEN	P_WB	P_FETCH

- **P_FETCH: Descriptor Fetch Control Field**

0: Preview channel fetch operation is disabled.

1: Preview channel fetch operation is enabled.

- **P_WB: Descriptor Writeback Control Field**

0: Preview channel writeback operation is disabled.

1: Preview channel writeback operation is enabled.

- **P_IEN: Transfer Done Flag Control**

0: Preview Transfer done flag generation is enabled.

1: Preview Transfer done flag generation is disabled.

- **P_DONE: (This field is only updated in the memory.)**

0: The transfer related to this descriptor has not been performed.

1: The transfer related to this descriptor has completed. This field is updated in memory at the end of the transfer, when writeback operation is enabled.

39.5.20 DMA Preview Descriptor Address Register

Register Name: DMA_P_DSCR

Access Type: Read-write

Reset Value: 0x00000000

31	30	29	28	27	26	25	24
P_DSCR							

23	22	21	20	19	18	17	16
P_DSCR							

15	14	13	12	11	10	9	8
P_DSCR							

7	6	5	4	3	2	1	0
P_DSCR						–	–

- **P_DSCR: Preview Descriptor Base Address (This address is word aligned.)**

39.5.21 DMA Codec Base Address Register

Register Name: DMA_C_ADDR

Access Type: Read-write

Reset Value: 0x00000000

31	30	29	28	27	26	25	24
C_ADDR							

23	22	21	20	19	18	17	16
C_ADDR							

15	14	13	12	11	10	9	8
C_ADDR							

7	6	5	4	3	2	1	0
C_ADDR						–	–

- **C_ADDR: Codec Image Base Address (This address is word aligned.)**

39.5.22 DMA Codec Control Register

Register Name: DMA_C_CTRL

Access Type: Read-write

Reset Value: 0x00000000

31	30	29	28	27	26	25	24
–	–	–	–	–	–	–	–

23	22	21	20	19	18	17	16
–	–	–	–	–	–	–	–

15	14	13	12	11	10	9	8
–	–	–	–	–	–	–	–

7	6	5	4	3	2	1	0
–	–	–	–	C_DONE	C_IEN	C_WB	C_FETCH

- **C_FETCH: Descriptor Fetch Control Field**

0: Codec channel fetch operation is disabled.

1: Codec channel fetch operation is enabled.

- **C_WB: Descriptor Writeback Control Field**

0: Codec channel writeback operation is disabled.

1: Codec channel writeback operation is enabled.

- **C_IEN: Transfer Done flag control**

0: Codec Transfer done flag generation is enabled.

1: Codec Transfer done flag generation is disabled.

- **C_DONE: (This field is only updated in the memory.)**

0: The transfer related to this descriptor has not been performed.

1: The transfer related to this descriptor has completed. This field is updated in memory at the end of the transfer, when. writeback operation is enabled.

39.5.23 DMA Codec Descriptor Address Register

Register Name: DMA_C_DSCR

Access Type: Read-write

Reset Value: 0x00000000

31	30	29	28	27	26	25	24
C_DSCR							

23	22	21	20	19	18	17	16
C_DSCR							

15	14	13	12	11	10	9	8
C_DSCR							

7	6	5	4	3	2	1	0
C_DSCR						–	–

- **C_DSCR: Codec Descriptor Base Address (This address is word aligned.)**

39.5.24 ISI Write Protection Control

Register Name: ISI_WPCR

Access Type: Read-write

31	30	29	28	27	26	25	24
WP_KEY (0x49 => “I”)							
23	22	21	20	19	18	17	16
WP_KEY (0x53 => “S”)							
15	14	13	12	11	10	9	8
WP_KEY (0x49 => “I”)							
7	6	5	4	3	2	1	0
							WP_EN

- **WP_PEN: Write Protection Enable**

0 = Disables the Write Protection if WP_KEY corresponds.

1 = Enables the Write Protection if WP_KEY corresponds.

- **WP_KEY: Write Protection KEY Password**

Should be written at value **0x495349** (ASCII code for “ISI”). Writing any other value in this field has no effect.

39.5.25 ISI Write Protection Status

Register Name: ISI_WPSR

Access Type: Read-write

31	30	29	28	27	26	25	24
-	-	-	-	-	-	-	-
23	22	21	20	19	18	17	16
WP_VSRC							
15	14	13	12	11	10	9	8
WP_VSRC							
7	6	5	4	3	2	1	0
-	-	-	-	WP_VS			

- **WP_VSRC: Write Protection Violation Status**

				WP_VS
0	0	0	0	No Write Protection Violation occurred since the last read of this register (WP_SR).
0	0	0	1	Write Protection detected unauthorized attempt to write a control register had occurred (since the last read).
0	0	1	0	Software reset had been performed while Write Protection was enabled (since the last read).
0	0	1	1	Both Write Protection violation and software reset with Write Protection enabled had occurred since the last read.
Other value				Reserved

- **WP_VSRC: Write Protection Violation Source**

				WP_VSRC
0	0	0	0	No Write Protection Violation occurred since the last read of this register (WP_SR).
0	0	0	1	Write access in ISI_CFG1 while Write Protection was enabled (since the last read).
0	0	1	0	Write access in ISI_CFG2 while Write Protection was enabled (since the last read).
0	0	1	1	Write access in ISI_PSIZE while Write Protection was enabled (since the last read).
0	1	0	0	Write access in ISI_PDECF while Write Protection was enabled (since the last read).
0	1	0	1	Write access in ISI_Y2R_SET0 while Write Protection was enabled (since the last read).
0	1	1	0	Write access in ISI_Y2R_SET1 while Write Protection was enabled (since the last read).
0	1	1	1	Write access in ISI_R2Y_SET0 while Write Protection was enabled (since the last read).
1	0	0	0	Write access in ISI_R2Y_SET1 while Write Protection was enabled (since the last read).
1	0	0	1	Write access in ISI_R2Y_SET2 while Write Protection was enabled (since the last read).
Other value				Reserved

40. Touch Screen ADC Controller (TSADCC)

40.1 Description

The Touch Screen ADC Controller is based on a Successive Approximation Register (SAR) 10-bit Analog-to-Digital Converter (ADC). It also integrates:

- a 8-to-1 analog multiplexer for analog-to-digital conversions of up to 8 analog lines
- 4 power switches that measure both axis positions on the resistive touch screen panel
- 1 additional power switch and an embedded resistor that detects pen-interrupt and pen loss

The conversions extend from 0V to TSADVREF.

The TSADCC supports an 8-bit or 10-bit resolution mode, and conversion results are reported in a common register for all channels, as well as in a channel-dedicated register.

Conversions can be started for all enabled channels, either by a software trigger, by detection of a rising edge on the external trigger pin TSADTRG or by an integrated programmable timer. When the Touch Screen is enabled, a timer-triggered sequencer automatically configures the power switches, performs the conversions and stores the results in dedicated registers.

The TSADCC also integrates a Sleep Mode and a Pen-Detect Mode and connects with one PDC channel. These features reduce both power consumption and processor intervention.

The TSADCC timings, like the Startup Time and Sample and Hold Time, are fully configurable.

40.2 Embedded Characteristics

- 8-channel ADC
- Support 4-wire resistive Touch Screen
- 10-bit 384 Ksamples/sec. Successive Approximation Register ADC
- -3/+3 LSB Integral Non Linearity, -2/+2 LSB Differential Non Linearity
- Integrated 8-to-1 multiplexer, offering eight independent 3.3V analog inputs
- External voltage reference for better accuracy on low voltage inputs
- Individual enable and disable of each channel
- Multiple trigger sources
  - Hardware or software trigger
  - External trigger pin
- Sleep Mode and conversion sequencer
  - Automatic wakeup on trigger and back to sleep mode after conversions of all enabled channels

40.3 Block Diagram

Figure 40-1. TSADCC Block Diagram

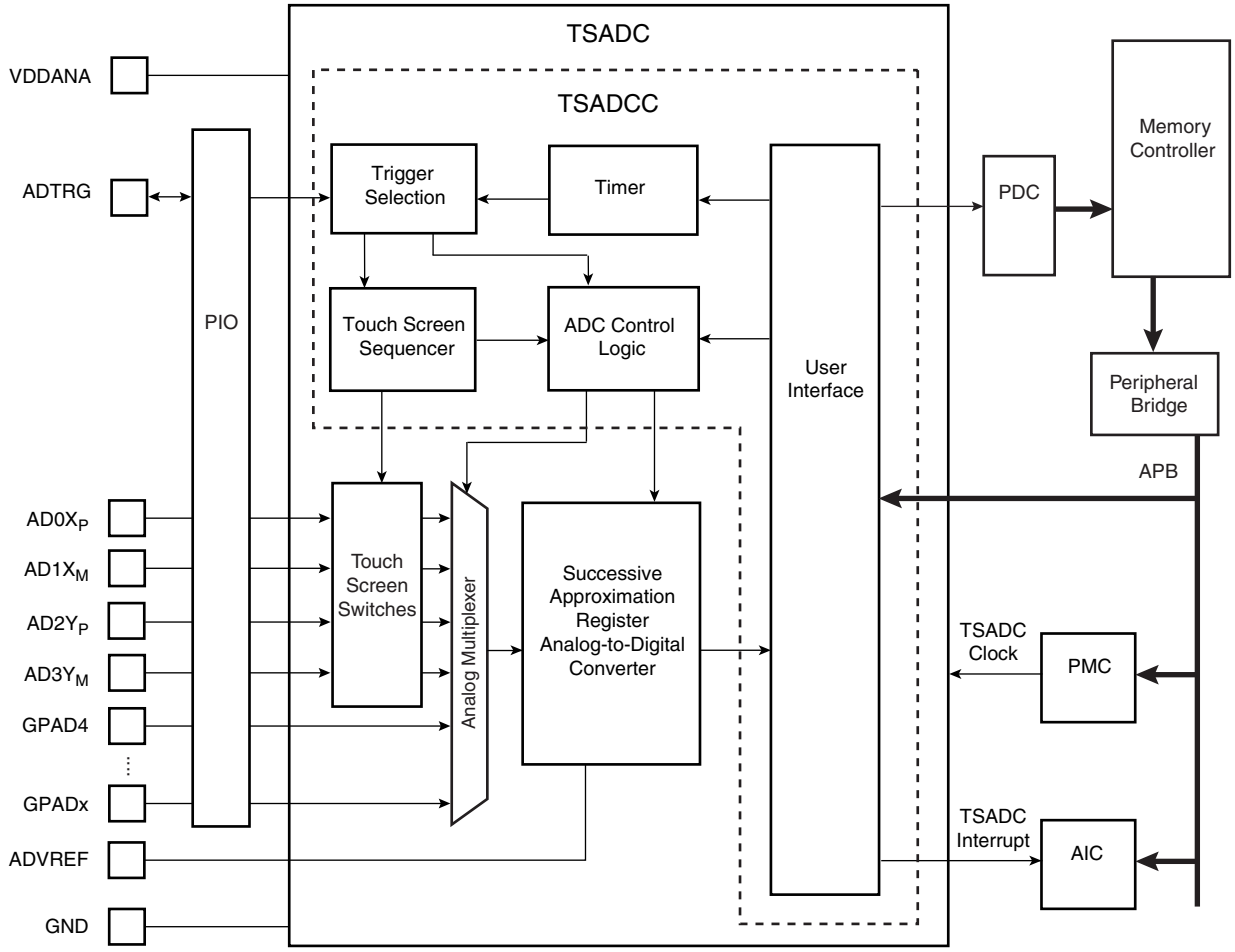

GPADx: last general-purpose ADC channel defined by the number of channels

40.4 Signal Description

Table 40-1. TSADCC Pin Description

Pin Name	Description
VDDANA	Analog power supply
TSADVREF	Reference voltage
$AD0X_P$	Analog input channel 0 or Touch Screen Top channel
$AD1X_M$	Analog input channel 1 or Touch Screen Bottom channel
$AD2Y_P$	Analog input channel 2 or Touch Screen Right channel
$AD3Y_M$	Analog input channel 3 or Touch Screen Left channel
GPAD4 - GPAD7	General-purpose analog input channels 4 to 7
TSADTRG	External trigger

40.5 Product Dependencies

40.5.1 Power Management

The TSADC controller is not continuously clocked. The programmer must first enable the TSADC controller Clock in the Power Management Controller (PMC) before using the TSADC controller. However, if the application does not require TSADC controller operations, the TSADC controller clock can be stopped when not needed and be restarted later.

Configuring the TSADC controller does not require the TSADC controller clock to be enabled.

40.5.2 Interrupt Sources

The TSADCC interrupt line is connected on one of the internal sources of the Advanced Interrupt Controller. Using the TSADCC interrupt requires the AIC to be programmed first.

Table 40-2. Peripheral IDs

Instance	ID
TSADCC	20

40.5.3 Analog Inputs

The analog input pins can be multiplexed with PIO lines. In this case, the assignment of the TSADCC input is automatically done as soon as the corresponding channel is enabled by writing the register TSADCC_CHER. By default, after reset, the PIO lines are configured as input with its pull-up enabled and the TSADCC inputs are connected to the GND.

40.5.4 I/O Lines

The pin TSADTRG may be shared with other peripheral functions through the PIO Controller. In this case, the PIO Controller should be set accordingly to assign the pin TSADTRG to the TSADCC function.

Table 40-3. I/O Lines

Instance	Signal	I/O Line	Peripheral
TSADCC	TSADTRG	PD28	A

40.5.5 Conversion Performances

For performance and electrical characteristics of the TSADCC, see the section “Electrical Characteristics” of the full datasheet.

40.6 Analog-to-digital Converter Functional Description

The TSADCC embeds a Successive Approximation Register (SAR) Analog-to-Digital Converter (ADC). The ADC supports 8-bit or 10-bit resolutions.

The conversion is performed on a full range between 0V and the reference voltage pin TSADVREF. Analog inputs between these voltages convert to values based on a linear conversion.

40.6.1 ADC Resolution

The ADC supports 8-bit or 10-bit resolutions. The 8-bit selection is performed by setting the bit LOWRES in the TSADCC Mode Register. See Section 40.11.2 “TSADCC Mode Register” on page 917.

By default, after a reset, the resolution is the highest and the DATA field in the “TSADCC Channel Data Register x (x = 0..7)” are fully used.

By setting the bit LOWRES, the ADC switches in the lowest resolution and the conversion results can be read in the eight lowest significant bits of the data registers. The two highest bits of the DATA field in the corresponding TSADCC_CDR register and of the LDATA field in the TSADCC_LCDR register read 0.

Moreover, when a PDC channel is connected to the TSADCC, 10-bit resolution sets the transfer request sizes to 16-bit. Setting the bit LOWRES automatically switches to 8-bit data transfers. In this case, the destination buffers are optimized.

All the conversions for the Touch Screen forces the ADC in 10-bit resolution, regardless of the LOWRES setting. Further details are given in the section “Operating Modes” on page 908.

40.6.2 ADC Clock

The TSADCC uses the ADC Clock to perform conversions. Converting a single analog value to a 10-bit digital data requires Sample and Hold Clock cycles as defined in the field SHTIM of the “TSADCC Mode Register” and 10 ADC Clock cycles. The ADC Clock frequency is selected in the PRESCAL field of the “TSADCC Mode Register”.

The ADC clock range is between MCK/2, if PRESCAL is 0, and MCK/128, if PRESCAL is set to 63 (0x3F). PRESCAL must be programmed in order to provide an ADC clock frequency according to the maximum sampling rate parameter given in the Electrical Characteristics section.

40.6.3 Sleep Mode

The TSADCC Sleep Mode maximizes power saving by automatically deactivating the Analog-to-Digital Converter cell when it is not being used for conversions. Sleep Mode is enabled by setting the bit SLEEP in “TSADCC Mode Register”.

The SLEEP of the ADC is automatically managed by the conversion sequencer, which can automatically process the conversions of all channels at lowest power consumption.

When a trigger occurs, the Analog-to-Digital Converter cell is automatically activated. As the analog cell requires a start-up time, the logic waits during this time and then starts the conversion on the enabled channels. When all conversions are complete, the ADC is deactivated until the next trigger.

40.6.4 Startup Time

The Touch Screen ADC has a minimal Startup Time when it exits the Sleep Mode. As the ADC Clock depends on the application, the user has to program the field STARTUP in the “TSADCC Mode Register”, which defines how many ADC Clock cycles to wait before performing the first conversion of the sequence.

The field STARTUP can define a Startup Time between 8 and 1024 ADC Clock cycles by steps of 8.

The user must assure that ADC Startup Time given in the section “Electrical Characteristics” is covered by this wait time.

40.6.5 Sample and Hold Time

In the same way, a minimal Sample and Hold Time is necessary for the TSADCC to guarantee the best converted final value between selection of two channels. This time depends on the input impedance of the analog input, but also on the output impedance of the driver providing the signal to the analog input, as there is no input buffer amplifier.

The Sample and Hold time has to be programmed through the bitfields SHTIM in the "TSADCC Mode Register" and TSSHTIM in the "TSADCC Touch Screen Register".

The field SHTIM defines the number of ADC Clock cycles for an analog input, while the field TSSHTIM defines the number of ADC Clock cycles for a Touch Screen input.

These both fields can define a Sample and Hold time between 1 and 16 ADC Clock cycles.

The field TSSHTIM defines also the time the power switches of the Touch Screen are closed when the TSADCC performs a conversion for the Touch Screen.

40.7 Touch Screen

40.7.1 Resistive Touch Screen Principles

A resistive touch screen is based on two resistive films, each one being fitted with a pair of electrodes, placed at the top and bottom on one film, and on the right and left on the other. Between the two, there is a layer that acts as an insulator, but also enables contact when you press the screen. This is illustrated in Figure 40-2.

The TSADC controller has the ability to perform without external components:

- Position Measurement
- Pressure Measurement
- Pen Detection

Figure 40-2. Touch Screen Position Measurement

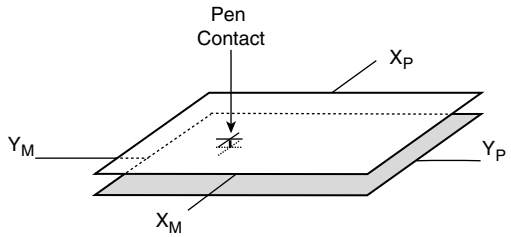

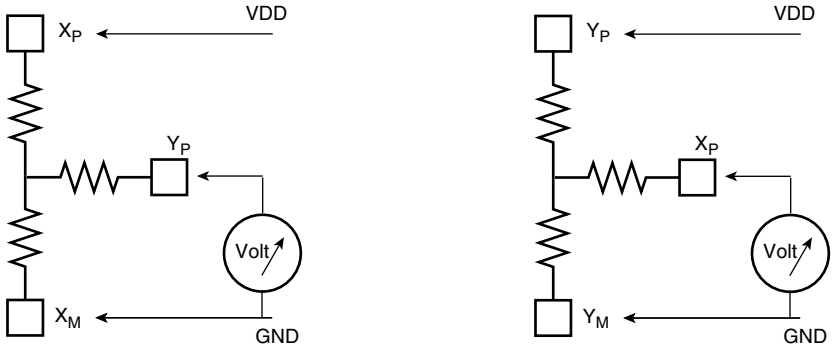

40.7.2 Position Measurement Method

As shown in Figure 40-2, to detect the position of a contact, a supply is first applied from top to bottom. Due to the linear resistance of the film, there is a voltage gradient from top to bottom. When a contact is performed on the screen, the voltage propagates at the point the two surfaces come into contact with the second film. If the input impedance on the right and left electrodes sense is high enough, the film does not affect this voltage, despite its resistive nature.

For the horizontal direction, the same method is used, but by applying supply from left to right. The range depends on the supply voltage and on the loss in the switches that connect to the top and bottom electrodes.

In an ideal world (linear, with no loss through switches), the horizontal position is equal to:

VY_M / VDD or VY_P / VDD.

The proposed implementation with on-chip power switches is shown in Figure 40-3. The voltage measurement at the output of the switch compensates for the switches loss.

It is possible to correct for the switch loss by performing the operation:

$[VY_P - VX_M] / [VX_P - VX_M]$.

This requires additional measurements, as shown in Figure 40-3.

Figure 40-3. Touch Screen Switches Implementation

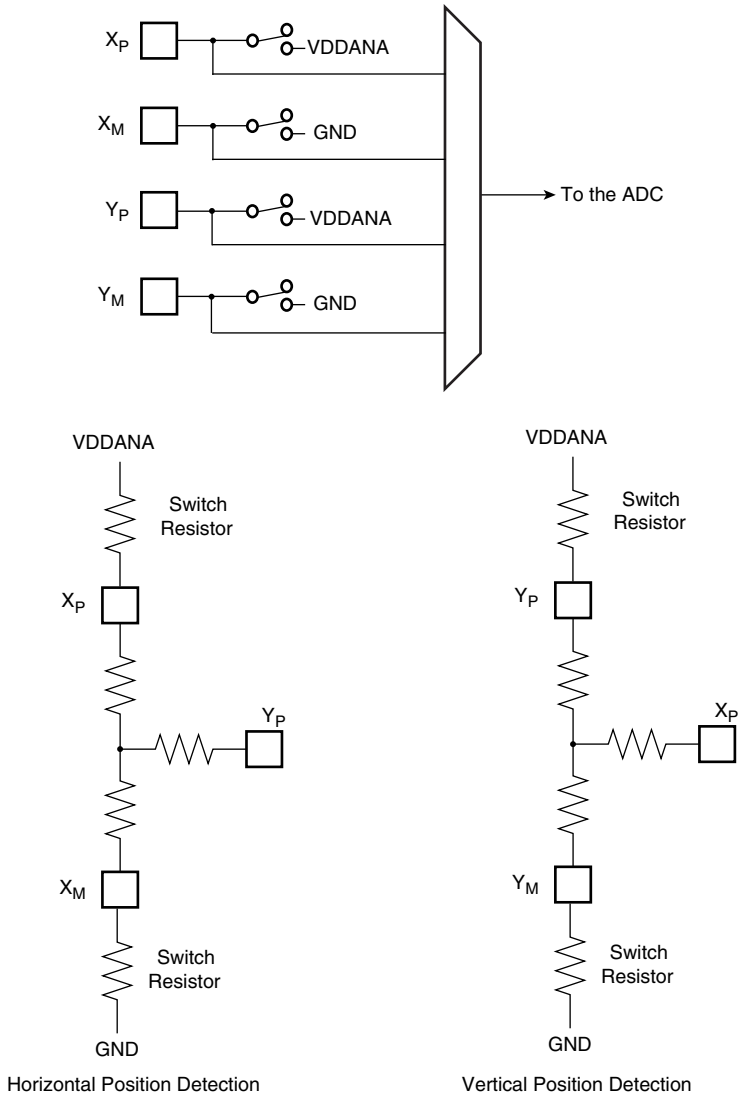

40.7.3 Pressure Measurement Method

The method to measure the pressure (Rp) applied to the touch screen is based on the knowledge of the X-Panel resistance (Rxp).

Three conversions (Xpos,Z1,Z2) are necessary to determine the value of Rp (Zaxis resistance).

Rp = Rxp*(Xpos/1024)*[(Z2/Z1)-1]

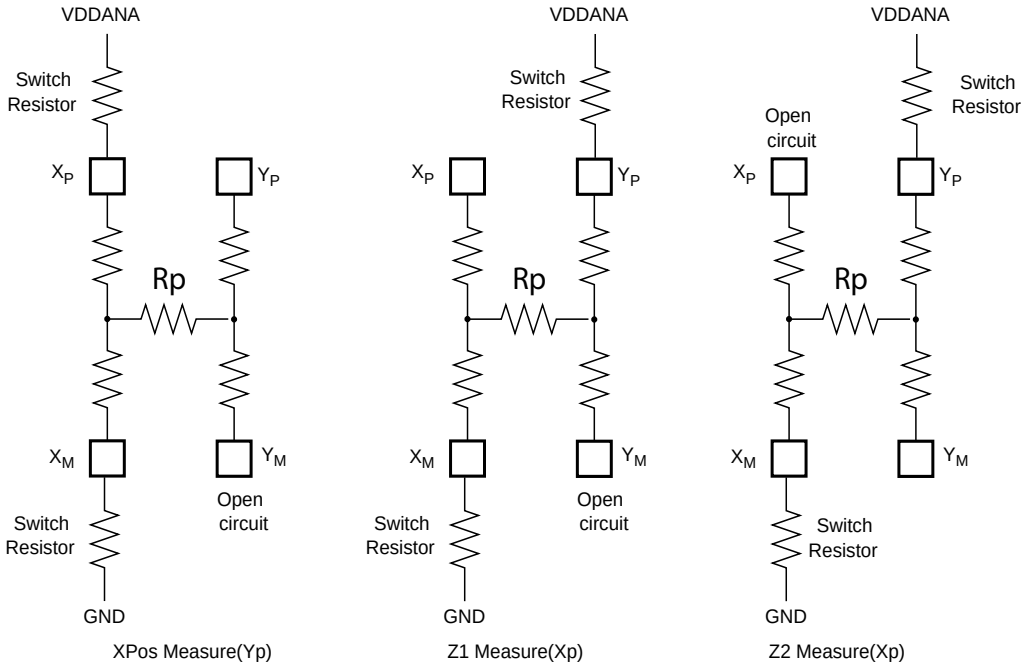

40.7.4 Pen Detect Method

When there is no contact, it is not necessary to perform conversion. However, it is important to detect a contact by keeping the power consumption as low as possible.

The proposed implementation polarizes the vertical panel by closing the switch on X_P and ties the horizontal panel by an embedded resistor connected to Y_M. This resistor is enabled by a fifth switch. Since there is no contact, no current is flowing and there is no related power consumption. As soon as a contact occurs, a current is flowing in the touch screen and a schmitt trigger detects the voltage in the resistor.

The Touch Screen Interrupt configuration is entered by programming the bit PENDET in the "TSADCC Mode Register". If this bit is written at 1, the switch on X_P and the switch on the resistor are both closed, except when a touch screen conversion is in progress.

To complete the circuit, a programmable debouncer is placed at the output of the schmitt trigger. This debouncer is programmable at 1 ADC Clock period, useful when the system is running at Slow Clock, or at up to 2^{15} ADC Clock periods, but better used to filter noise on the Touch Screen panel when the system is running at high speed. The debouncer length can be selected by programming the field PENDBC in "TSADCC Mode Register".

Figure 40-4. Touch Screen Pen Detect

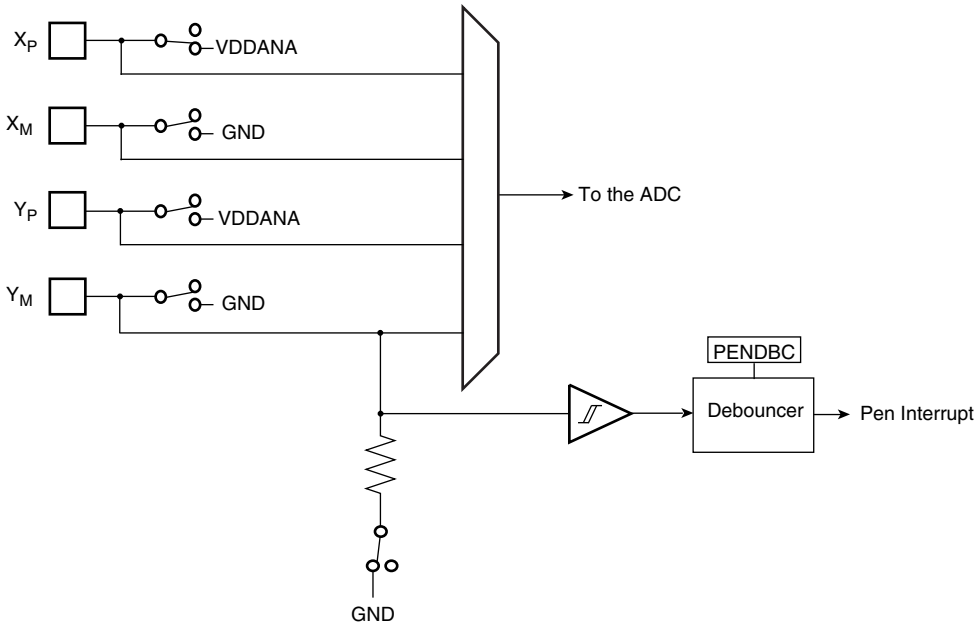

The Touch Screen Pen Detect can be used to generate a TSADCC interrupt to wake up the system or it can be programmed to trig a conversion, so that a position can be measured as soon as a contact is detected if the TSADCC is programmed for an operating mode involving the Touch Screen.

The Pen Detect generates two types of status, reported in the "TSADCC Status Register":

- the bit PENCNT is set as soon as a current flows for a time over the debouncing time as defined by PENDBC and remains set until TSADCC_SR is read.
- the bit NOCNT is set as soon as no current flows for a time over the debouncing time as defined by PENDBC and remains set until TSADCC_SR is read.

Both bits are automatically cleared as soon as the Status Register TSADCC_SR is read, and can generate an interrupt by writing accordingly the "TSADCC Interrupt Enable Register".

40.8 Conversion Results

When a conversion is completed, the resulting 8-bit or 10-bit digital value is right-aligned and stored in the "TSADCC Channel Data Register x (x = 0..7)" of the current channel and in the "TSADCC Last Converted Data Register".

The channel EOC bit and the bit DRDY in the "TSADCC Status Register" are both set. If the PDC channel is enabled, DRDY rising triggers a data transfer. In any case, either EOC and DRDY can trigger an interrupt.

Reading one of the "TSADCC Channel Data Register x (x = 0..7)" registers clears the corresponding EOC bit.

Reading "TSADCC Last Converted Data Register" clears the DRDY bit and the EOC bit corresponding to the last converted channel.

Figure 40-5. EOCx and DRDY Flag Behavior

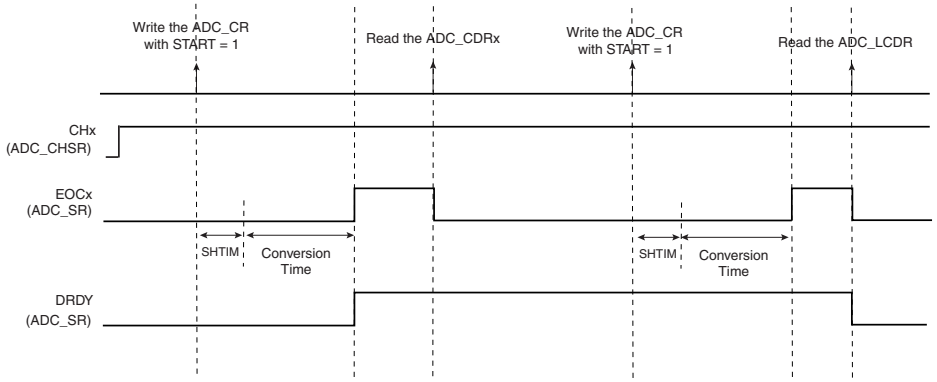

If the "TSADCC Channel Data Register x (x = 0..7)" is not read before further incoming data is converted, the corresponding Overrun Error (OVRE) flag is set in the "TSADCC Status Register".

In the same way, new data converted when DRDY is high sets the bit GOVRE (General Overrun Error) in the "TSADCC Status Register".

The OVRE and GOVRE flags are automatically cleared when the "TSADCC Status Register"is read.

Figure 40-6. GOVRE and OVREx Flag Behavior

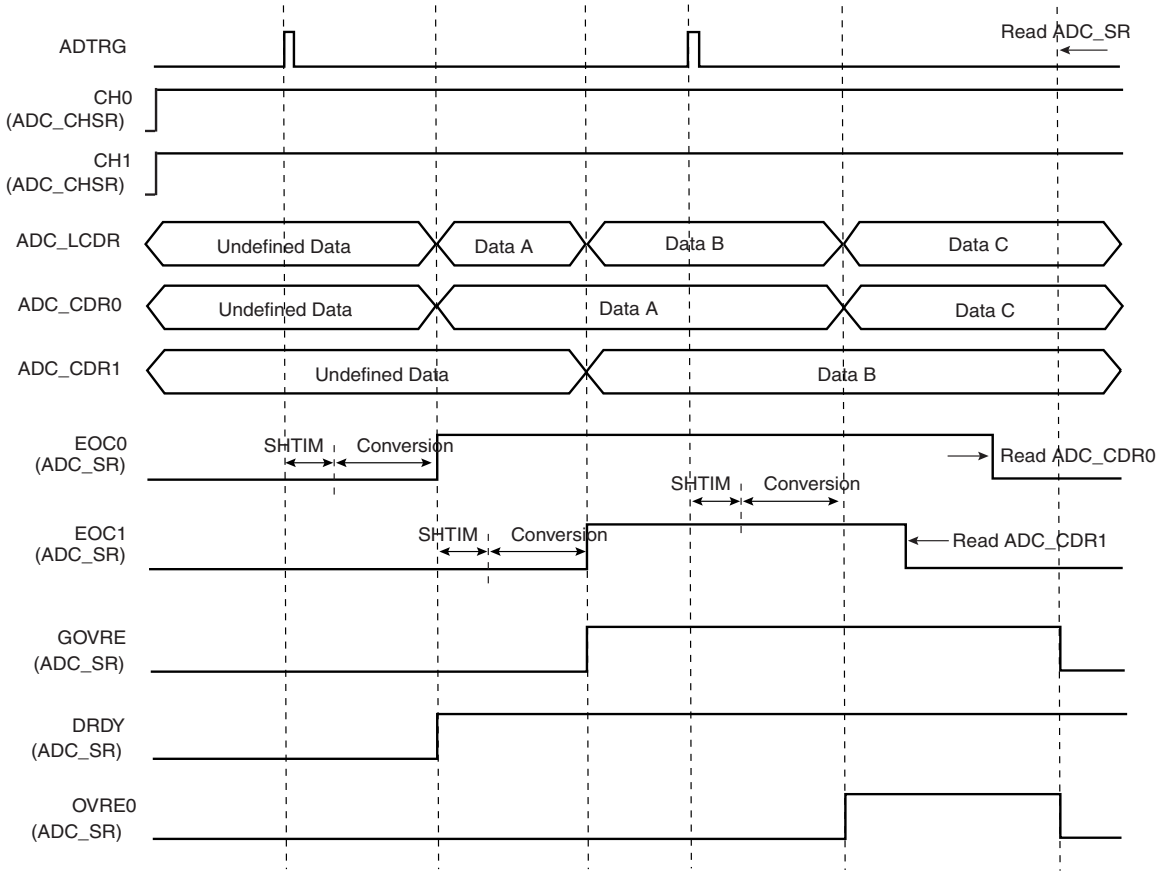

Warning: If the corresponding channel is disabled during a conversion or if it is disabled and then reenabled during a conversion, its associated data and its corresponding EOC and OVRE flags in TSADCC_SR are unpredictable.

40.9 Conversion Triggers

Conversions of the active analog channels are started with a software or a hardware trigger.

The software trigger is provided by writing the "TSADCC Control Register" with the bit START at 1.

The hardware trigger can be selected by the filed TRGMOD in the TSADCC Trigger Register (TSADCC_TRGR) between:

- an edge, either rising or falling or any, detected on the external trigger pin TSADTRG
- the Pen Detect, depending on how the PENDET bit is set in the "TSADCC Mode Register"
- a continuous trigger, meaning the TSADCC restarts the next sequence as soon as it finishes the current one, in this case, only one software trigger is required at the beginning
- a periodic trigger, which is defined by programming the field TRGPER in the "TSADCC Trigger Register"

Enabling hardware triggers does not disable the software trigger functionality. Thus, if a hardware trigger is selected, the start of a conversion can still be initiated by the software trigger.

40.10 Operating Modes

The Touch Screen ADC Controller features several operating modes, each defining a conversion sequence:

- The ADC Mode: at each trigger, all the enabled channels are converted
- The Touch Screen Mode: at each trigger, the touch screen inputs are converted with the switches accordingly set and the results are processed and stored in the corresponding data registers
- The Interleaved Mode: at each trigger, the 8 conversions for the touch screen and the analog inputs conversions are performed. Only the analog inputs results are managed by the PDC and the touch screen conversions can be performed less often than the analog inputs.

The Operating Mode of the TSADCC is programmed in the field TSAMOD in the "TSADCC Mode Register".

The conversion sequences for each Operating Mode are described in the following paragraphs.

The conversion sequencer, combined with the Sleep Modes, allows automatic processing with minimum processor intervention and optimized power consumption. In any case, the sequence starts with a trigger event.

Note: The reference voltage pins always remain connected in normal mode as in sleep mode.

40.10.1 ADC Mode

In the ADC Mode, the active channels are defined by the "TSADCC Channel Status Register", which is defined by writing the "TSADCC Channel Enable Register" and "TSADCC Channel Disable Register". The results are stored in the "TSADCC Channel Data Register x (x = 0..7)" and in the "TSADCC Last Converted Data Register", so that data transfers by using the PDC are possible.

At each trigger, the following sequence is performed:

1. If SLEEP is set, wake up the ADC cell and wait for the Startup Time.
2. If Channel 0 is enabled, convert Channel 0 and store result in both TSADCC_CDR0 and TSADCC_LCDR.
3. If Channel 1 is enabled, convert Channel 1 and store result in both TSADCC_CDR1 and TSADCC_LCDR.
4. If Channel 2 is enabled, convert Channel 2 and store result in both TSADCC_CDR2 and TSADCC_LCDR.
5. If Channel 3 is enabled, convert Channel 3 and store result in both TSADCC_CDR3 and TSADCC_LCDR.
6. If Channel 4 to Channel 7 are enabled, convert the Channels and store result in the corresponding TSADCC_CDRx and TSADCC_LCDR.
7. If SLEEP is set, sleep down the ADC cell.

If the PDC is enabled, all the converted data are transferred contiguously in the memory buffer. The bit LOWRES defines which resolution is used, either 8-bit or 10-bit, and thus the width of the PDC memory buffer.

40.10.2 Touch Screen Mode

Writing TSAMOD to “Touch Screen Only Mode” automatically enables the touch screen pins as analog inputs, and thus disables the digital function of the corresponding pins.

In Touch Screen Mode, the channels 0 to 3 corresponding to the Touch Screen inputs are automatically activated and the bits CH0 to CH3 are automatically set in the “TSADCC Channel Status Register”.

The remaining channels can be either enabled or disabled by the user and their conversions are performed at the end of each touch screen sequence.

The resolution is forced to 10 bits, regardless of the LOWRES bit setting.

At each trigger, if the bit PRES in “TSADCC Mode Register” is disabled, the following sequence is performed to measure only position.

1. If SLEEP is set, wake up the ADC cell and wait for the Startup Time.
2. Close the switches on the inputs X_P and X_M during the Sample and Hold Time.
3. Convert Channel X_M and store the result in TSADCC_CDR1.
4. Close the switches on the inputs X_P and X_M during the Sample and Hold Time.
5. Convert Channel X_P, subtract TSADCC_CDR1 from the result and store the subtraction result in both TSADCC_CDR0 and TSADCC_LCDR.
6. Close the switches on the inputs X_P and X_M during the Sample and Hold Time.
7. Convert Channel Y_P, subtract TSADCC_CDR1 from the result and store the subtraction result in both TSADCC_CDR1 and TSADCC_LCDR.
8. Close the switches on the inputs Y_P and Y_M during the Sample and Hold Time.
9. Convert Channel Y_M and store the result in TSADCC_CDR3.
10. Close the switches on the inputs Y_P and Y_M during the Sample and Hold Time.
11. Convert Channel Y_P, subtract TSADCC_CDR3 from the result and store the subtraction result in both TSADCC_CDR2 and TSADCC_LCDR.
12. Close the switches on the inputs Y_P and Y_M during the Sample and Hold Time.
13. Convert Channel X_P, subtract TSADCC_CDR3 from the result and store the subtraction result in both TSADCC_CDR3 and TSADCC_LCDR.
14. If Channel 4 to Channel 7 are enabled, convert the Channels and store result in the corresponding TSADCC_CDRx and TSADCC_LCDR.
15. If SLEEP is set, sleep down the ADC cell.

The resulting buffer is 16 bits wide and its structure stored in memory is:

1. X_P - X_M
2. Y_P - X_M
3. Y_P - Y_M
4. X_P - Y_M
5. AD4 to AD7 if enabled.

The vertical position can be easily calculated by dividing the data at offset 0 (X_P - X_M) by the data at offset 1 (Y_P - X_M).

The horizontal position can be easily calculated by dividing the data at offset 2 (Y_P - Y_M) by the data at offset 3 (X_P - Y_M).

if the bit PRES in “TSADCC Mode Register” is enabled, the following sequence is performed to measure both position and pressure.

1. If SLEEP is set, wake up the ADC cell and wait for the Startup Time.
2. Close the switches on the inputs X_M and Y_p during the Sample and Hold Time.
3. Convert Channel X_p and store the result in both TSADCC_Z1DR and TSADCC_LCDR.
4. Close the switches on the inputs X_M and Y_P during the Sample and Hold Time.
5. Convert Channel Y_M and store the result in both TSADCC_Z2DR and TSADCC_LCDR.
6. Close the switches on the inputs X_P and X_M during the Sample and Hold Time.
7. Convert Channel X_M and store the result in TSADCC_CDR1.
8. Close the switches on the inputs X_P and X_M during the Sample and Hold Time.
9. Convert Channel $X_{p,}$ subtract TSADCC_CDR1 from the result and store the subtraction result in both TSADCC_CDR0 and TSADCC_LCDR.
10. Close the switches on the inputs X_P and X_M during the Sample and Hold Time.
11. Convert Channel Y_P and store the result in TSADCC_XPDR, subtract TSADCC_CDR1 from the result and store the subtraction result in both TSADCC_CDR1 and TSADCC_LCDR.
12. Close the switches on the inputs Y_P and Y_M during the Sample and Hold Time.
13. Convert Channel Y_M and store the result in TSADCC_CDR3 while storing content of TSADCC_XPDR in TSADCC_LCDR.
14. Close the switches on the inputs Y_P and Y_M during the Sample and Hold Time.
15. Convert Channel Y_p subtract TSADCC_CDR3 from the result and store the subtraction result in both TSADCC_CDR2 and TSADCC_LCDR.
16. Close the switches on the inputs Y_P and Y_M during the Sample and Hold Time.
17. Convert Channel X_p subtract TSADCC_CDR3 from the result and store the subtraction result in both TSADCC_CDR3 and TSADCC_LCDR.
18. if Channel 4 to channel 7are enabled, convert the channels and store result in the corresponding TSADCC_CDRx and TSADCC_LCDR
19. If SLEEP is set, sleep down the ADC cell.

The resulting buffer is 16 bits wide and its structure stored in memory is:

1. Z1
2. Z2
3. X_P - X_M
4. Y_P - X_M
5. Xpos
6. Y_P - Y_M
7. X_P - Y_M
8. AD4 to AD7 if enabled.

The vertical position can be easily calculated by dividing the data at offset 2 (X_P - X_M) by the data at offset 3(Y_P - X_M).

The horizontal position can be easily calculated by dividing the data at offset 5 (Y_P - Y_M) by the data at offset 7 (X_P - Y_M).

The Pressure measure can be calculated using the following formula

Rp = Rxp*(Xpos/1024)*[(Z2/Z1)-1]

40.10.3 Interleaved Mode

In the Interleaved Mode, the conversion of the touch screen channels are made in parallel to each channel. In addition to interleaving, the analog channels 4 and 5 can be converted more often than the touch screen channels

depending on the TSFREQ field in the register TSADCC_MR. In the interleaved mode at least one ADC channel must be enabled.

In the Interleaved Mode, the channels 0 to 3 corresponding to the Touch Screen inputs are automatically activated and the bits CH0 to CH3 are automatically set in the "TSADCC Channel Status Register".

This mode allows periodic conversion of the remaining channels at high sampling rate and converted data transferred in memory with the PDC while the touch screen conversions are performed at low rate. The PDC transfers only analog channel data and touch screen data must be read in the "TSADCC Channel Data Register x (x = 0..7)".

The resolution can be configured for the channel 4 to 7 only, through the LOWRES bit. The resolution for the conversion made on channels 0 to 3 is forced to 10 bits.

At each trigger, the sequence performed depends on a Trigger Counter, which is compared at the end to the Touch Screen Frequency, as defined by the field TSFREQ in the register TSADCC_MR:

$$\text{Touch Screen Frequency} = \text{Trigger Frequency} / (2^{TSFREQ+1})$$

unless TSFREQ is programmed at 0 or 1. In such cases, the Touch Screen Frequency is one-sixth of the Trigger Frequency.

As TSFREQ varies between 0 and 15, this results in the ADC channels being converted between 6 to 65536 less often than the Touch Screen channels.

If the bit PRES in "TSADCC Mode Register" is disabled (measure only position), the sequences are as follow:

- For Trigger Counter at 0:

1. Close the switches on the inputs X_P and X_M during the Sample and Hold Time.
2. Convert Channel X_M and store the result in TSADCC_CDR1.
3. If Channel 4 to Channel 7 are enabled, convert Channels and store result in the corresponding TSADCC_CDRx and TSADCC_LCDR.
4. Set Trigger Counter to 1.

- For Trigger Counter at 1:

1. Close the switches on the inputs X_P and X_M during the Sample and Hold Time.
2. Convert Channel X_P, subtract TSADCC_CDR1 from the result and store the subtraction result in TSADCC_CDR0 (and also in TSADCC_LCDR if PDCEN is enabled).
3. If Channel 4 to Channel 7 are enabled, convert Channels and store result in the corresponding TSADCC_CDRx and TSADCC_LCDR.
4. Set Trigger Counter to 2.

- For Trigger Counter at 2:

1. Close the switches on the inputs X_P and X_M during the Sample and Hold Time.
2. Convert Channel Y_P,, subtract TSADCC_CDR1 from the result and store the subtraction result in TSADCC_CDR1 (and also in TSADCC_LCDR if PDCEN is enabled).
3. If Channel 4 to Channel 7 are enabled, convert Channels and store result in the corresponding TSADCC_CDRx and TSADCC_LCDR.
4. Set Trigger Counter to 3.

- For Trigger Counter at 3:

1. Close the switches on the inputs Y_P and Y_M during the Sample and Hold Time.
2. Convert Channel Y_M and store the result in TSADCC_CDR3.
3. If Channel 4 to Channel 7 are enabled, convert Channels and store result in the corresponding TSADCC_CDRx and TSADCC_LCDR.
4. Set Trigger Counter to 4.

- For Trigger Counter at 4:

1. Close the switches on the inputs Y_P and Y_M during the Sample and Hold Time.
2. Convert Channel Y_P, subtract TSADCC_CDR3 from the result and store the subtraction result in TSADCC_CDR2 (and also in TSADCC_LCDR if PDCEN is enabled).
3. If Channel 4 to Channel 7 are enabled, convert Channels and store result in the corresponding TSADCC_CDRx and TSADCC_LCDR.
4. Set Trigger Counter to 5.

- For Trigger Counter at 5:

1. Close the switches on the inputs Y_P and Y_M during the Sample and Hold Time
2. Convert Channel X_P, subtract TSADCC_CDR3 from the result and store the subtraction result in TSADCC_CDR3 (and also in TSADCC_LCDR if PDCEN is enabled).
3. If Channel 4 to Channel 7 are enabled, convert Channels and store result in the corresponding TSADCC_CDRx and TSADCC_LCDR.
4. Set Trigger Counter to 6.

- For Trigger Counter between 6 and ($2^{TSFREQ+1}$):

1. Increment Trigger Counter.
2. If Trigger Counter equals ($2^{TSFREQ+1}$), then set Trigger Counter to 0.
3. If Channel 4 to Channel 7 are enabled, convert Channels and store result in the corresponding TSADCC_CDRx and TSADCC_LCDR.

If the bit PRES in "TSADCC Mode Register" is enabled (measure both position and pressure), the sequences are as follow:

- For Trigger Counter at 0:

1. Close the switches on the inputs X_P and Y_M during the Sample and Hold Time.
2. Convert Channel X_P and store the result in TSADCC_Z1DR (and also in TSADCC_LCDR if PDCEN is enabled).
3. If Channel 4 to Channel 7 are enabled, convert Channels and store result in the corresponding TSADCC_CDRx and TSADCC_LCDR.
4. Set Trigger Counter to 1.

- For Trigger Counter at 1:

1. Close the switches on the inputs X_P and Y_M during the Sample and Hold Time.
2. Convert Channel Y_M and store the result in TSADCC_Z2DR (and also in TSADCC_LCDR if PDCEN is enabled).
3. If Channel 4 to Channel 7 are enabled, convert Channels and store result in the corresponding TSADCC_CDRx and TSADCC_LCDR.
4. Set Trigger Counter to 2.

- For Trigger Counter at 2:

1. Close the switches on the inputs X_P and X_M during the Sample and Hold Time.
2. Convert Channel X_M and store the result in TSADCC_CDR1.
3. If Channel 4 to Channel 7 are enabled, convert Channels and store result in the corresponding TSADCC_CDRx and TSADCC_LCDR.
4. Set Trigger Counter to 3.

- For Trigger Counter at 3:

1. Close the switches on the inputs X_P and X_M during the Sample and Hold Time.
2. Convert Channel X_P, subtract TSADCC_CDR1 from the result and store the subtraction result in TSADCC_CDR0 (and also in TSADCC_LCDR if PDCEN is enabled).
3. If Channel 4 to Channel 7 are enabled, convert Channels and store result in the corresponding TSADCC_CDRx and TSADCC_LCDR.
4. Set Trigger Counter to 4.

- For Trigger Counter at 4:

1. Close the switches on the inputs X_P and X_M during the Sample and Hold Time.
2. Convert Channel Y_P and store the result in TSADCC_XPDR, subtract TSADCC_CDR1 from the result and store the subtraction result in TSADCC_CDR1 (and also in TSADCC_LCDR if PDCEN is enabled).
3. If Channel 4 to Channel 7 are enabled, convert Channels and store result in the corresponding TSADCC_CDRx and TSADCC_LCDR.
4. Set Trigger Counter to 5.

- For Trigger Counter at 5:

1. Close the switches on the inputs Y_P and Y_M during the Sample and Hold Time.
2. Convert Channel Y_M and store the result in TSADCC_CDR3 (and store content of TSADCC_XPDR in TSADCC_LCDR if PDCEN is enabled).
3. If Channel 4 to Channel 7 are enabled, convert Channels and store result in the corresponding TSADCC_CDRx and TSADCC_LCDR.
4. Set Trigger Counter to 6.

- For Trigger Counter at 6:

1. Close the switches on the inputs Y_P and Y_M during the Sample and Hold Time.
2. Convert Channel Y_P, subtract TSADCC_CDR3 from the result and store the subtraction result in TSADCC_CDR2 (and also in TSADCC_LCDR if PDCEN is enabled).
3. If Channel 4 to Channel 7 are enabled, convert Channels and store result in the corresponding TSADCC_CDRx and TSADCC_LCDR.
4. Set Trigger Counter to 7.

- For Trigger Counter at 7:

1. Close the switches on the inputs Y_P and Y_M during the Sample and Hold Time
2. Convert Channel X_P, subtract TSADCC_CDR3 from the result and store the subtraction result in TSADCC_CDR3 (and also in TSADCC_LCDR if PDCEN is enabled).
3. If Channel 4 to Channel 7 are enabled, convert Channels and store result in the corresponding TSADCC_CDRx and TSADCC_LCDR.

4. Set Trigger Counter to 8.

- For Trigger Counter between 8 and ($2^{TSFREQ+1}$):

1. Increment Trigger Counter.
2. If Trigger Counter equals ($2^{TSFREQ+1}$), then set Trigger Counter to 0.
3. If Channel 4 to Channel 7 are enabled, convert Channels and store result in the corresponding TSADCC_CDRx and TSADCC_LCDR.

The Trigger Counter is cleared when TSAMOD is written to define the Interleaved Mode, then it simply rolls over.

40.10.4 Manual Mode

The TSADCC features a manual mode allowing to control the state (open/close) of the four switches.

Writing TSAMOD to “Manual Mode” automatically enables the ADC pins as analog inputs.The switches positions are controlled through the “TSADCC Manual Switch Command Register”. In this mode, the “Sample and Hold Time” used is the one defined for the Touchscreen mode (TSSHTIM).

To perform a measurement, the following sequence must be followed

1. Select the switch (switches) to close.
2. If SLEEP is set, wake up the ADC cell and wait for the Startup Time.
3. Enable the Channel to convert and start a conversion. If SLEEP is set, wake up the ADC cell and wait for the Startup Time are performed before the conversion.The result is stored in TSADCC_CDRx (and TSADCC_LCDR if PDCEN is enabled).
4. If SLEEP is set, sleep down the ADC cell.
5. Open the switches to reduce power consumption.

40.11 Touch Screen ADC Controller (TSADCC) User Interface

Table 40-4. Register Mapping

Offset	Register	Name	Access	Reset
0x00	Control Register	TSADCC_CR	Write-only	–
0x04	Mode Register	TSADCC_MR	Read-write	0x0000_0000
0x08	Trigger Register	TSADCC_TRGR	Read-write	0x0000_0000
0x0C	Touch Screen Register	TSADCC_TSR	Read-write	0x0000_0000
0x10	Channel Enable Register	TSADCC_CHER	Write-only	–
0x14	Channel Disable Register	TSADCC_CHDR	Write-only	–
0x18	Channel Status Register	TSADCC_CHSR	Read-only	0x0000_0000
0x1C	Status Register	TSADCC_SR	Read-only	0x000C_0000
0x20	Last Converted Data Register	TSADCC_LCDR	Read-only	0x0000_0000
0x24	Interrupt Enable Register	TSADCC_IER	Write-only	–
0x28	Interrupt Disable Register	TSADCC_IDR	Write-only	–
0x2C	Interrupt Mask Register	TSADCC_IMR	Read-only	0x0000_0000
0x30	Channel Data Register 0	TSADCC_CDR0	Read-only	0x0000_0000
0x34	Channel Data Register 1	TSADCC_CDR1	Read-only	0x0000_0000
0x38	Channel Data Register 2	TSADCC_CDR2	Read-only	0x0000_0000
0x3C	Channel Data Register 3	TSADCC_CDR3	Read-only	0x0000_0000
0x40	Channel Data Register 4	TSADCC_CDR4	Read-only	0x0000_0000
0x44	Channel Data Register 5	TSADCC_CDR5	Read-only	0x0000_0000
0x48	Channel Data Register 6	TSADCC_CDR6	Read-only	0x0000_0000
0x4C	Channel Data Register 7	TSADCC_CDR7	Read-only	0x0000_0000
0x50	X Position Data Register	TSADCC_XPDR	Read-only	0x0000_0000
0x54	Z1 Data Register	TSADCC_Z1DR	Read-only	0x0000_0000
0x58	Z2 Data Register	TSADCC_Z2DR	Read-only	0x0000_0000
0X5C	Reserved	–	–	–
0X60	Manual Switch Command Register	TSADCC_MSCR	Read-write	–
	Reserved	–	–	–
0xE4	Write Protection Mode Register	TSADCC_WPMR	Read-write	–
0xE8	Write Protection Status Register	TSADCC_WPSR	Write-only	–

40.11.1 TSADCC Control Register

Register Name: TSADCC_CR

Address: 0xFFFB0000

Access Type: Write-only

31	30	29	28	27	26	25	24
–	–	–	–	–	–	–	–
23	22	21	20	19	18	17	16
–	–	–	–	–	–	–	–
15	14	13	12	11	10	9	8
–	–	–	–	–	–	–	–
7	6	5	4	3	2	1	0
–	–	–	–	–	–	START	SWRST

- **SWRST: Software Reset**

0 = No effect.

1 = Resets the TSADCC simulating a hardware reset.

- **START: Start Conversion**

0 = No effect.

1 = Begins analog-to-digital conversion.

40.11.2 TSADCC Mode Register

Register Name: TSADCC_MR

Address: 0xFFFB0004

Access Type: Read/Write

31	30	29	28	27	26	25	24
PENDBC				SHTIM			

23	22	21	20	19	18	17	16
–	STARTUP						

15	14	13	12	11	10	9	8
PRESCAL							

7	6	5	4	3	2	1	0
PRES	PENDET	SLEEP	LOWRES	PDCEN	-	TSAMOD	

- **TSAMOD: Touch Screen ADC Mode**

TSAMOD	Touch Screen ADC Operating Mode
0	ADC Mode
1	Touch Screen Only Mode
2	Interleaved Mode
3	Manual Mode

- **PDCEN: PDC transfer in** Touchscreen/Interleaved mode or Manual mode

0: Disable the PDC transfer in Touchscreen/Interleaved mode or Manual mode

1: In Touchscreen/Interleaved mode or Manual mode, the data conversion is transferred in the TSADCC_LCDR register allowing PDC transfer to memory.

- **LOWRES: Resolution Selection**

LOWRES	Selected Resolution
0	10-bit resolution
1	8-bit resolution

This option is only valid in ADC mode.

- **SLEEP: Sleep Mode**

SLEEP	Selected Mode
0	Normal Mode
1	Sleep Mode

- **PRESCAL: Prescaler Rate Selection**

ADCCLK = MCK / ((PRESCAL+1) * 2)

- **PENDET: Pen Detect Selection**

0: Disable the Touch screen pins as analog inputs

1: enable the Touch screen pins as analog inputs

- **PRES: Pressure Measurement Selection**

0: Disable the pressure measurement function

1: enable the pressure measurement function

- **STARTUP: Start Up Time**

  Startup Time = (STARTUP+1) * 8/ADCCLK

- **SHTIM: Sample & Hold Time for ADC Channels**

Programming 0 for SHTIM gives a Sample & Hold Time equal to 1/ADCCLK.

  Sample & Hold Time = SHTIM/ADCCLK

- **PENDBC: Pen Detect debouncing period**

  Period = 2^{PENDBC}/ADCCLK

40.11.3 TSADCC Trigger Register

Register Name: TSADCC_TRGR

Address: 0xFFFB0008

Access Type: Read/Write

31	30	29	28	27	26	25	24
TRGPER							

23	22	21	20	19	18	17	16
TRGPER							

15	14	13	12	11	10	9	8
–	–	–	–	–	–	–	–

7	6	5	4	3	2	1	0
–	–	–	–	–	TRGMOD		

- **TRGMOD: Trigger Mode**

TRGMOD			Selected Trigger Mode
0	0	0	No trigger, only software trigger can start conversions
0	0	1	External Trigger Rising Edge
0	1	0	External Trigger Falling Edge
0	1	1	External Trigger Any Edge
1	0	0	Pen Detect Trigger (shall be selected only if PENDET is set and TSAMOD = Touch Screen only mode)
1	0	1	Periodic Trigger (TRGPER shall be initiated appropriately)
1	1	0	Continuous Mode
1	1	1	Reserved

- **TRGPER: Trigger Period**

Effective only if TRGMOD defines a Periodic Trigger

Defines the periodic trigger period, with the following equations:

Trigger Period = (TRGPER+1) /ADCCLK

40.11.4 TSADCC Touch Screen Register

Register Name: TSADCC_TSR

Address: 0xFFFB000C

Access Type: Read/Write

31	30	29	28	27	26	25	24
–	–	–	–	TSSHTIM			

23	22	21	20	19	18	17	16
–	–	–	–	–	–	–	–

15	14	13	12	11	10	9	8
–	–	–	–	–	–	–	–

7	6	5	4	3	2	1	0
–	–	–	–	TSFREQ			

- **TSFREQ: Touch Screen Frequency in Interleaved Mode**

Effective only if the Touch Screen Interleaved Mode is selected. Defines the Touch Screen Frequency compared to the Trigger Frequency.

If TSFREQ is 0 or 1, the Touch Screen Frequency is a sixth of the Trigger Frequency.

Otherwise:

Touch Screen Frequency = Trigger Frequency / ($2^{TSFREQ+1}$)

- **TSSHTIM: Sample & Hold Time for Touch Screen Channels**

Programming 0 for TSSHTIM gives a Touch Screen Sample & Hold Time equal to 1/ADCCLK.

Touch Screen Sample & Hold Time = TSSHTIM/ADCCLK

40.11.5 TSADCC Channel Enable Register

Register Name: TSADCC_CHER

Address: 0xFFFB0010

Access Type: Write-only

31	30	29	28	27	26	25	24
–	–	–	–	–	–	–	–
23	22	21	20	19	18	17	16
–	–	–	–	–	–	–	–
15	14	13	12	11	10	9	8
–	–	–	–	–	–	–	–
7	6	5	4	3	2	1	0
CH7	CH6	CH5	CH4	CH3	CH2	CH1	CH0

- **CHx: Channel x Enable**

0 = No effect.

1 = Enables the corresponding channel.

40.11.6 TSADCC Channel Disable Register

Register Name: TSADCC_CHDR

Address: 0xFFFB0014

Access Type: Write-only

31	30	29	28	27	26	25	24
–	–	–	–	–	–	–	–
23	22	21	20	19	18	17	16
–	–	–	–	–	–	–	–
15	14	13	12	11	10	9	8
–	–	–	–	–	–	–	–
7	6	5	4	3	2	1	0
CH7	CH6	CH5	CH4	CH3	CH2	CH1	CH0

- **CHx: Channel x Disable**

0 = No effect.

1 = Disables the corresponding channel.

Warning: If the corresponding channel is disabled during a conversion or if it is disabled then reenabled during a conversion, its associated data and its corresponding EOC and OVRE flags in TSADCC_SR are unpredictable.

40.11.7 TSADCC Channel Status Register

Register Name: TSADCC_CHSR

Address: 0xFFFB0018

Access Type: Read-only

31	30	29	28	27	26	25	24
–	–	–	–	–	–	–	–

23	22	21	20	19	18	17	16
–	–	–	–	–	–	–	–

15	14	13	12	11	10	9	8
–	–	–	–	–	–	–	–

7	6	5	4	3	2	1	0
CH7	CH6	CH5	CH4	CH3	CH2	CH1	CH0

- **CHx: Channel x Status**

0 = Corresponding channel is disabled.

1 = Corresponding channel is enabled.

40.11.8 TSADCC Status Register

Register Name: TSADCC_SR

Address: 0xFFFB001C

Access Type: Read-only

31	30	29	28	27	26	25	24
–	OVREZ2	OVREZ1	OVREXP	–	EOCZ2	EOCZ1	EOCXP

23	22	21	20	19	18	17	16
–	–	NOCNT	PENCNT	RXBUFF	ENDRX	GOVRE	DRDY

15	14	13	12	11	10	9	8
OVRE7	OVRE6	OVRE5	OVRE4	OVRE3	OVRE2	OVRE1	OVRE0

7	6	5	4	3	2	1	0
EOC7	EOC6	EOC5	EOC4	EOC3	EOC2	EOC1	EOC0

- **EOCx: End of Conversion x**

0 = Corresponding analog channel is disabled, or the conversion is not finished.

1 = Corresponding analog channel is enabled and conversion is complete.

- **OVREx: Overrun Error x**

0 = No overrun error on the corresponding channel since the last read of TSADCC_SR.

1 = There has been an overrun error on the corresponding channel since the last read of TSADCC_SR.

- **DRDY: Data Ready**

0 = No data has been converted since the last read of TSADCC_LCDR.

1 = At least one data has been converted and is available in TSADCC_LCDR.

- **GOVRE: General Overrun Error**

0 = No General Overrun Error occurred since the last read of TSADCC_SR.

1 = At least one General Overrun Error has occurred since the last read of TSADCC_SR.

- **ENDRX: End of RX Buffer**

0 = The Receive Counter Register has not reached 0 since the last write in TSADCC_RCR or TSADCC_RNCR.

1 = The Receive Counter Register has reached 0 since the last write in TSADCC_RCR or TSADCC_RNCR.

- **RXBUFF: RX Buffer Full**

0 = TSADCC_RCR or TSADCC_RNCR have a value other than 0.

1 = Both TSADCC_RCR and TSADCC_RNCR have a value of 0.

- **PENCNT: Pen Contact**

0 = No contact has been detected since the last read of TSADCC_SR or PENDET is at 0.

1 = At least one contact has been detected since the last read of TSADCC_SR.

- **NOCNT: No Contact**

0 = No contact loss has been detected since the last read of TSADCC_SR or PENDET is at 0.

1 = At least one contact loss has been detected since the last read of TSADCC_SR.

- **EOCXp: End of Conversion X Position**

0 = The pressure measurement is disabled or the Xp conversion is not finished.

1 = The pressure measurement is enabled and the Xp conversion is complete

- **EOCZ1: End of Conversion Z1 Measure**

0 = The pressure measurement is disabled or the Z1 conversion is not finished.

1 = The pressure measurement is enabled and the Z1 conversion is complete

- **EOCZ2: End of Conversion Z2 Measure**

0 = The pressure measurement is disabled or the Z2 conversion is not finished.

1 = The pressure measurement is enabled and the Z2 conversion is complete

- **OVREXP: Overrun Error on X Position**

0 = No overrun error on the XP measure channel.

1 = There has been an overrun error on the XP measure channel.

- **OVREZ1: Overrun Error on Z1 Measure**

0 = No overrun error on the Z1 measure channel.

1 = There has been an overrun error on the Z1 measure channel.

- **OVREZ2: Overrun Error on Z2 Measure**

0 = No overrun error on the Z2 measure channel.

1 = There has been an overrun error on the Z2 measure channel.

40.11.9 TSADCC Channel Data Register x (x = 0..7)

Register Name: TSADCC_CDR0..TSADCC_CDR7

Address: 0xFFFB0030

Access Type: Read-only

31	30	29	28	27	26	25	24
–	–	–	–	–	–	–	–

23	22	21	20	19	18	17	16
–	–	–	–	–	–	–	–

15	14	13	12	11	10	9	8
–	–	–	–	–	–	DATA	

7	6	5	4	3	2	1	0
DATA							

- **DATA: Channel Data**

The analog-to-digital conversion data is placed into this register at the end of a conversion of the corresponding channel and remains until a new conversion on the same channel is completed.

40.11.10 TSADCC Last Converted Data Register

Register Name: TSADCC_LCDR

Address: 0xFFFB0020

Access Type: Read-only

31	30	29	28	27	26	25	24
–	–	–	–	–	–	–	–

23	22	21	20	19	18	17	16
–	–	–	–	–	–	–	–

15	14	13	12	11	10	9	8
–	–	–	–	–	–	LDATA	

7	6	5	4	3	2	1	0
LDATA							

- **LDATA: Last Data Converted**

The analog-to-digital conversion data is placed into this register at the end of a conversion on any analog channel and remains until a new conversion on any analog channel is completed.

40.11.11 TSADCC Interrupt Enable Register

Register Name: TSADCC_IER

Address: 0xFFFB0024

Access Type: Write-only

31	30	29	28	27	26	25	24
–	OVREZ2	OVREZ1	OVREXP	–	EOCZ2	EOCZ1	EOCXP
23	22	21	20	19	18	17	16
–	–	NOCNT	PENCNT	RXBUFF	ENDRX	GOVRE	DRDY
15	14	13	12	11	10	9	8
OVRE7	OVRE6	OVRE5	OVRE4	OVRE3	OVRE2	OVRE1	OVRE0
7	6	5	4	3	2	1	0
EOC7	EOC6	EOC5	EOC4	EOC3	EOC2	EOC1	EOC0

- **EOCx: End of Conversion Interrupt Enable x**
- **OVREx: Overrun Error Interrupt Enable x**
- **DRDY: Data Ready Interrupt Enable**
- **GOVRE: General Overrun Error Interrupt Enable**
- **ENDRX: End of Receive Buffer Interrupt Enable**
- **RXBUFF: Receive Buffer Full Interrupt Enable**
- **PENCNT: Pen Contact**
- **NOCNT: No Contact**
- **EOCXp: End of Conversion X Position**
- **EOCZ1: End of Conversion Z1 Measure**
- **EOCZ2: End of Conversion Z2 Measure**
- **OVREXP: Overrun Error Interrupt Enable X Position**
- **OVREZ1: Overrun Error Interrupt Enable Z1 Measure**
- **OVREZ2: Overrun Error Interrupt Enable Z2 Measure**

0 = No effect.

1 = Enables the corresponding interrupt.

40.11.12 TSADCC Interrupt Disable Register

Register Name: TSADCC_IDR

Address: 0xFFFB0028

Access Type: Write-only

31	30	29	28	27	26	25	24
–	OVREZ2	OVREZ1	OVREXP	–	EOCZ2	EOCZ1	EOCXP
23	22	21	20	19	18	17	16
–	–	NOCNT	PENCNT	RXBUFF	ENDRX	GOVRE	DRDY
15	14	13	12	11	10	9	8
OVRE7	OVRE6	OVRE5	OVRE4	OVRE3	OVRE2	OVRE1	OVRE0
7	6	5	4	3	2	1	0
EOC7	EOC6	EOC5	EOC4	EOC3	EOC2	EOC1	EOC0

- **EOCx: End of Conversion Interrupt Disable x**
- **OVREx: Overrun Error Interrupt Disable x**
- **DRDY: Data Ready Interrupt Disable**
- **GOVRE: General Overrun Error Interrupt Disable**
- **ENDRX: End of Receive Buffer Interrupt Disable**
- **RXBUFF: Receive Buffer Full Interrupt Disable**
- **PENCNT: Pen Contact**
- **NOCNT: No Contact**
- **EOCXp: End of Conversion X Position**
- **EOCZ1: End of Conversion Z1 Measure**
- **EOCZ2: End of Conversion Z2 Measure**
- **OVREXP: Overrun Error Interrupt Disable X Position**
- **OVREZ1: Overrun Error Interrupt Disable Z1 Measure**
- **OVREZ2: Overrun Error Interrupt Disable Z2 Measure**

0 = No effect.

1 = Disables the corresponding interrupt.

40.11.13 TSADCC Interrupt Mask Register

Register Name: TSADCC_IMR

Address: 0xFFFB002C

Access Type: Read-only

31	30	29	28	27	26	25	24
–	OVREZ2	OVREZ1	OVREXP	–	EOCZ2	EOCZ1	EOCXP
23	22	21	20	19	18	17	16
–	–	NOCNT	PENCNT	RXBUFF	ENDRX	GOVRE	DRDY
15	14	13	12	11	10	9	8
OVRE7	OVRE6	OVRE5	OVRE4	OVRE3	OVRE2	OVRE1	OVRE0
7	6	5	4	3	2	1	0
EOC7	EOC6	EOC5	EOC4	EOC3	EOC2	EOC1	EOC0

- **EOCx: End of Conversion Interrupt Mask x**
- **OVREx: Overrun Error Interrupt Mask x**
- **DRDY: Data Ready Interrupt Mask**
- **GOVRE: General Overrun Error Interrupt Mask**
- **ENDRX: End of Receive Buffer Interrupt Mask**
- **RXBUFF: Receive Buffer Full Interrupt Mask**
- **PENCNT: Pen Contact**
- **NOCNT: No Contact**
- **EOCXp: End of Conversion X Position**
- **EOCZ1: End of Conversion Z1 Measure**
- **EOCZ2: End of Conversion Z2 Measure**
- **OVREXP: Overrun Error Interrupt Mask X Position**
- **OVREZ1: Overrun Error Interrupt Mask Z1 Measure**
- **OVREZ2: Overrun Error Interrupt Mask Z2 Measure**

0 = The corresponding interrupt is disabled.

1 = The corresponding interrupt is enabled.

40.11.14 TSADCC X Position Data Register

Register Name: TSADCC_XPDR.

Address: 0xFFFB0050

Access Type: Read-only

31	30	29	28	27	26	25	24
–	–	–	–	–	–	–	–
23	22	21	20	19	18	17	16
–	–	–	–	–	–	–	–
15	14	13	12	11	10	9	8
–	–	–	–	–	–	DATA	
7	6	5	4	3	2	1	0
DATA							

- **DATA: X Position Data**

40.11.15 TSADCC Z1 Data Register

Register Name: TSADCC_Z1DR.

Address: 0xFFFB0054

Access Type: Read-only

31	30	29	28	27	26	25	24
–	–	–	–	–	–	–	–
23	22	21	20	19	18	17	16
–	–	–	–	–	–	–	–
15	14	13	12	11	10	9	8
–	–	–	–	–	–	DATA	
7	6	5	4	3	2	1	0
DATA							

- **DATA: Z1 Measurement Data**

40.11.16 TSADCC Z2 Data Register

Register Name: TSADCC_Z2DR.

Address: 0xFFFB0058

Access Type: Read-only

31	30	29	28	27	26	25	24
–	–	–	–	–	–	–	–
23	22	21	20	19	18	17	16
–	–	–	–	–	–	–	–
15	14	13	12	11	10	9	8
–	–	–	–	–	–	Z2	
7	6	5	4	3	2	1	0
Z2							

- **DATA: Z2 Measurement Data**

40.11.17 TSADCC Manual Switch Command Register

Register Name: TSADCC_MSCR.

Address: 0xFFFB0060

Access Type: Read-only

31	30	29	28	27	26	25	24
–	–	–	–	–	–	–	–
23	22	21	20	19	18	17	16
–	–	–	–	–	–	–	–
15	14	13	12	11	10	9	8
–	–	–	–	–	–		
7	6	5	4	3	2	1	0
–	–	–	–	Y_M	Y_P	X_M	X_P

- Y_M,Y_P,X_M,X_P**: Switch Command**

If bit is set the related switch is closed

If bit is cleared the related switch is open

40.11.18 TSADCC Write Protection Mode Register

Register Name: TSADCC_WPMR

Address: 0xFFFB00E4

Access Type: Read-Write

31	30	29	28	27	26	25	24
KEY							
23	22	21	20	19	18	17	16
KEY							
15	14	13	12	11	10	9	8
KEY							
7	6	5	4	3	2	1	0
–	–	–	–	–	–	–	WPEN

- **WPEN: Write Protection of TSADCC_MR, TSADCC_TRGR and TSADCC_TSR**

0 and KEY= 0x545341 Write protection is disabled.

1 and KEY = 0x545341, Write Protection is enabled.

40.11.19 TSADCC Write Protection Status Register

Register Name: TSADCC_WPSR

Address: 0xFFFB00E8

Access Type: Read-Write

31	30	29	28	27	26	25	24
OFFSET_ERR							
23	22	21	20	19	18	17	16
OFFSET_ERR							
15	14	13	12	11	10	9	8
OFFSET_ERR							
7	6	5	4	3	2	1	0
–	–	–	–	–	–	–	WPS

- **WPS: Write Protection Status**

0: Write protection is disabled.

1:Write Protection is enabled.

- **OFFSET_ERR: Offset error**

Offset where the last unauthorized access occurred.

41. DMA Controller (DMAC)

41.1 Description

The DMA Controller (DMAC) is an AHB-central DMA controller core that transfers data from a source peripheral to a destination peripheral over one or more AMBA buses. One channel is required for each source/destination pair. In the most basic configuration, the DMAC has one master interface and one channel. The master interface reads the data from a source and writes it to a destination. Two AMBA transfers are required for each DMAC data transfer. This is also known as a dual-access transfer.

The DMAC is programmed via the APB interface.

41.2 Embedded Characteristics

- Two Masters
- Embeds 8 channels
- 64 bytes/FIFO for Channel Buffering
- Linked List support with Status Write Back operation at End of Transfer
- Word, HalfWord, Byte transfer support.
- memory to memory transfer
- Peripheral to memory
- Memory to peripheral

The DMA controller can handle the transfer between peripherals and memory and so receives the triggers from the peripherals below. The hardware interface numbers are also given below in Table 41-1

Table 41-1. DMA Channel Definition

Instance Name	T/R	DMA Channel HW interface Number
MCI0	TX/RX	0
SPI0	TX	1
SPI0	RX	2
SPI1	TX	3
SPI1	RX	4
SSC0	TX	5
SSC0	RX	6
SSC1	TX	7
SSC1	RX	8
AC97C	TX	9
AC97C	RX	10
MCI1	TX/RX	13

- Acting as two Matrix Masters
- Embeds 8 unidirectional channels with programmable priority
- Address Generation
  - Source/Destination address programming
  - Address increment, decrement or no change

  - DMA chaining support for multiple non-contiguous data blocks through use of linked lists
  - Scatter support for placing fields into a system memory area from a contiguous transfer. Writing a stream of data into non-contiguous fields in system memory
  - Gather support for extracting fields from a system memory area into a contiguous transfer
  - User enabled auto-reloading of source, destination and control registers from initially programmed values at the end of a block transfer
  - Auto-loading of source, destination and control registers from system memory at end of block transfer in block chaining mode
  - Unaligned system address to data transfer width supported in hardware
- Channel Buffering
  - 16-word FIFO
  - Automatic packing/unpacking of data to fit FIFO width
- Channel Control
  - Programmable multiple transaction size for each channel
  - Support for cleanly disabling a channel without data loss
  - Suspend DMA operation
  - Programmable DMA lock transfer support
- Transfer Initiation
  - Support for Software handshaking interface. Memory mapped registers can be used to control the flow of a DMA transfer in place of a hardware handshaking interface
- Interrupt
  - Programmable Interrupt generation on DMA Transfer completion Block Transfer completion, Single/Multiple transaction completion or Error condition

41.3 Block Diagram

Figure 41-1. DMA Controller (DMAC) Block Diagram

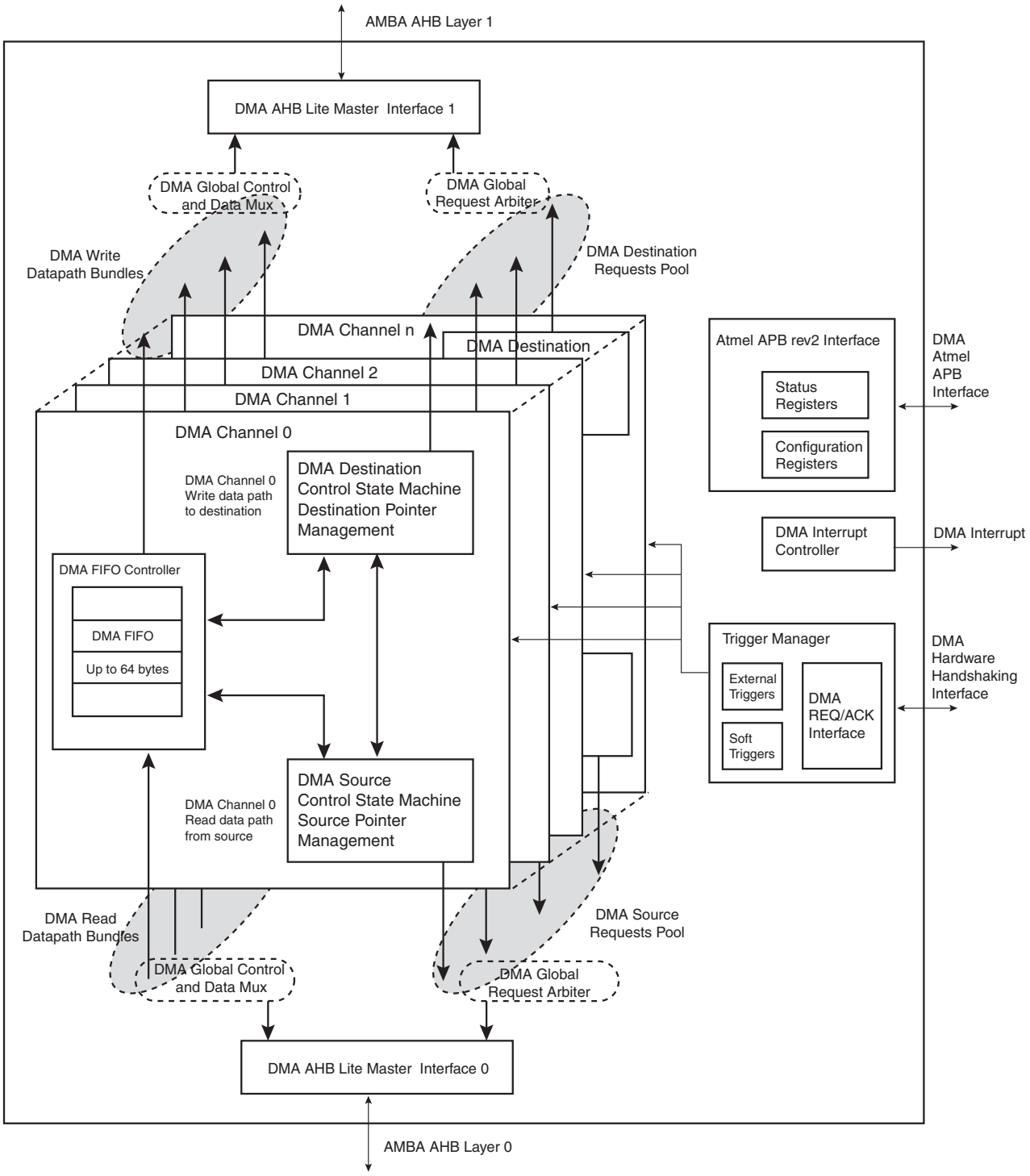

41.4 Functional Description

41.4.1 Basic Definitions

Source peripheral: Device on an AMBA layer from where the DMAC reads data, which is then stored in the channel FIFO. The source peripheral teams up with a destination peripheral to form a channel.

Destination peripheral: Device to which the DMAC writes the stored data from the FIFO (previously read from the source peripheral).

Memory: Source or destination that is always “ready” for a DMAC transfer and does not require a handshaking interface to interact with the DMAC.

Channel: Read/write datapath between a source peripheral on one configured AMBA layer and a destination peripheral on the same or different AMBA layer that occurs through the channel FIFO. If the source peripheral is not memory, then a source handshaking interface is assigned to the channel. If the destination peripheral is not memory, then a destination handshaking interface is assigned to the channel. Source and destination handshaking interfaces can be assigned dynamically by programming the channel registers.

Master interface: DMAC is a master on the AHB bus reading data from the source and writing it to the destination over the AHB bus.

Slave interface: The APB interface over which the DMAC is programmed. The slave interface in practice could be on the same layer as any of the master interfaces or on a separate layer.

Handshaking interface: A set of signal registers that conform to a protocol and *handshake* between the DMAC and source or destination peripheral to control the transfer of a single or chunk transfer between them. This interface is used to request, acknowledge, and control a DMAC transaction. A channel can receive a request through one of two types of handshaking interface: hardware or software.

Hardware handshaking interface: Uses hardware signals to control the transfer of a single or chunk transfer between the DMAC and the source or destination peripheral.

Software handshaking interface: Uses software registers to contr5ol the transfer of a single or chunk transfer between the DMAC and the source or destination peripheral. No special DMAC handshaking signals are needed on the I/O of the peripheral. This mode is useful for interfacing an existing peripheral to the DMAC without modifying it.

Flow controller: The device (either the DMAC or source/destination peripheral) that determines the length of and terminates a DMAC buffer transfer. If the length of a buffer is known before enabling the channel, then the DMAC should be programmed as the flow controller. If the length of a buffer is not known prior to enabling the channel, the source or destination peripheral needs to terminate a buffer transfer. In this mode, the peripheral is the flow controller.

Transfer hierarchy: Figure 41-2 on page 937 illustrates the hierarchy between DMAC transfers, buffer transfers, chunk or single, and AMBA transfers (single or burst) for non-memory peripherals. Figure 41-3 on page 937 shows the transfer hierarchy for memory.

Figure 41-2. DMAC Transfer Hierarchy for Non-Memory Peripheral

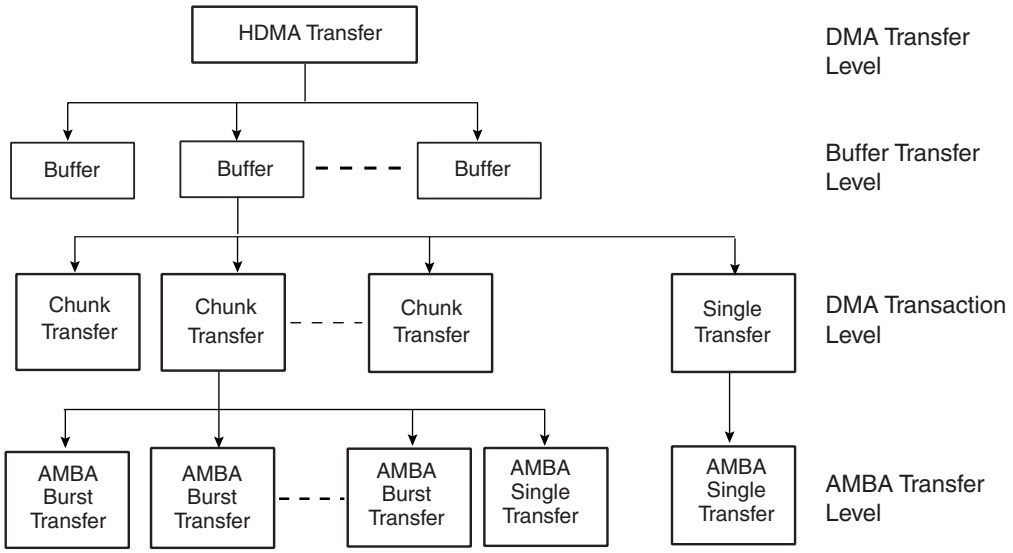

Figure 41-3. DMAC Transfer Hierarchy for Memory

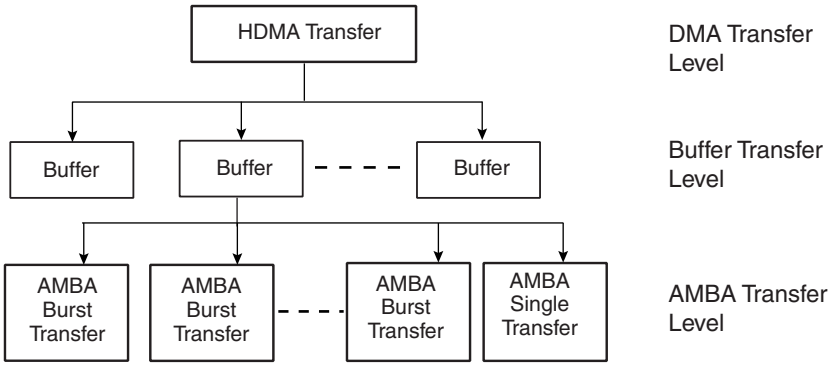

Buffer: A buffer of DMAC data. The amount of data (length) is determined by the flow controller. For transfers between the DMAC and memory, a buffer is broken directly into a sequence of AMBA bursts and AMBA single transfers.

For transfers between the DMAC and a non-memory peripheral, a buffer is broken into a sequence of DMAC transactions (single and chunks). These are in turn broken into a sequence of AMBA transfers.

Transaction: A basic unit of a DMAC transfer as determined by either the hardware or software handshaking interface. A transaction is only relevant for transfers between the DMAC and a source or destination peripheral if the source or destination peripheral is a non-memory device. There are two types of transactions: single transfer and chunk transfer.

- **Single transfer:** The length of a single transaction is always 1 and is converted to a single AMBA access.
- **Chunk transfer:** The length of a chunk is programmed into the DMAC. The chunk is then converted into a sequence of AHB access.DMAC executes each AMBA burst transfer by performing incremental bursts that are no longer than 16 beats.

DMAC transfer: Software controls the number of buffers in a DMAC transfer. Once the DMAC transfer has completed, then hardware within the DMAC disables the channel and can generate an interrupt to signal the completion of the DMAC transfer. You can then re-program the channel for a new DMAC transfer.

Single-buffer DMAC transfer: Consists of a single buffer.

Multi-buffer DMAC transfer: A DMAC transfer may consist of multiple DMAC buffers. Multi-buffer DMAC transfers are supported through buffer chaining (linked list pointers), auto-reloading of channel registers, and contiguous buffers. The source and destination can independently select which method to use.

- **Linked lists (buffer chaining) –** A descriptor pointer (DSCR) points to the location in system memory where the next linked list item (LLI) exists. The LLI is a set of registers that describe the next buffer (buffer descriptor) and a descriptor pointer register. The DMAC fetches the LLI at the beginning of every buffer when buffer chaining is enabled.
- **Replay –** The DMAC automatically reloads the channel registers at the end of each buffers to the value when the channel was first enabled.
- **Contiguous buffers –** Where the address of the next buffer is selected to be a continuation from the end of the previous buffer.

Picture-in-Picture Mode: DMAC contains a picture-in-picture mode support. When this mode is enabled, addresses are automatically incremented by a programmable value when the DMAC channel transfer count reaches a user defined boundary.

Figure 41-4 on page 938 illustrates a memory mapped image 4:2:2 encoded located at image_base_address in memory. A user defined start address is defined at Picture_start_address. The incremented value is set to memory_hole_size = image_width - picture_width, and the boundary is set to picture_width.

Figure 41-4. Picture-In-Picture Mode Support

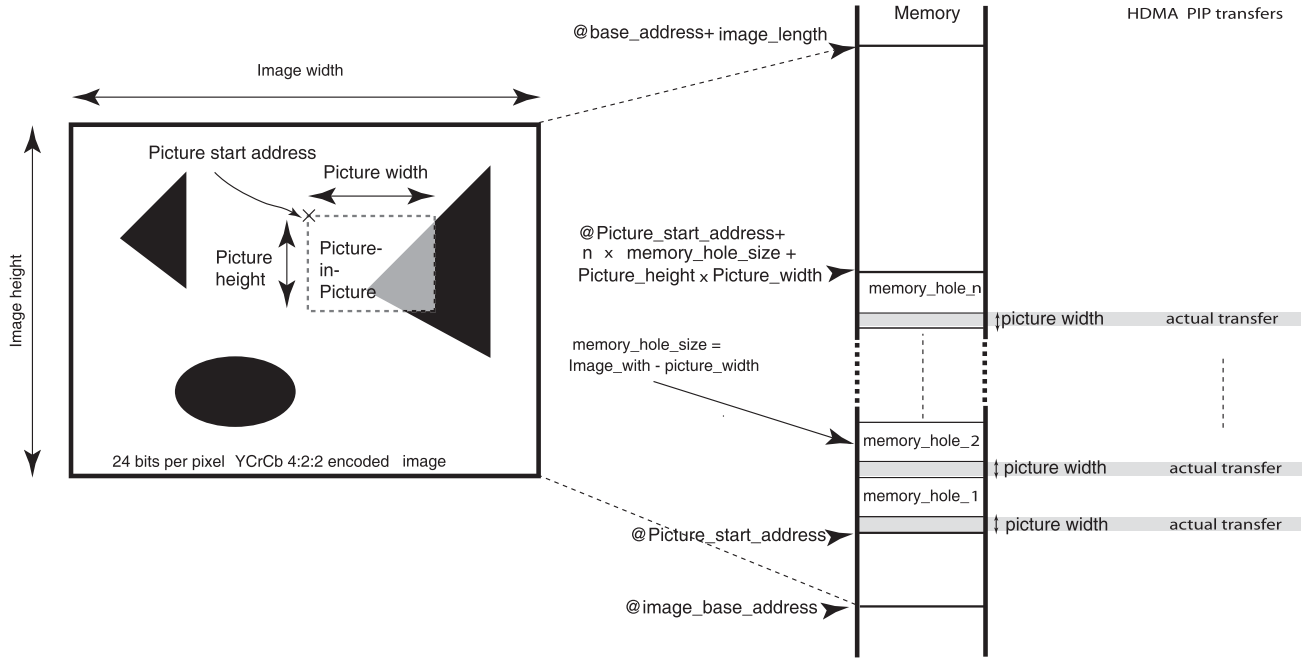

Channel locking: Software can program a channel to keep the AHB master interface by locking the arbitration for the master bus interface for the duration of a DMAC transfer, buffer, or chunk.

Bus locking: Software can program a channel to maintain control of the AMBA bus by asserting hmastlock for the duration of a DMAC transfer, buffer, or transaction (single or chunk). Channel locking is asserted for the duration of bus locking at a minimum.

41.4.2 Memory Peripherals

Figure 41-3 on page 937 shows the DMAC transfer hierarchy of the DMAC for a memory peripheral. There is no handshaking interface with the DMAC, and therefore the memory peripheral can never be a flow controller. Once the channel is enabled, the transfer proceeds immediately without waiting for a transaction request. The alternative

to not having a transaction-level handshaking interface is to allow the DMAC to attempt AMBA transfers to the peripheral once the channel is enabled. If the peripheral slave cannot accept these AMBA transfers, it inserts wait states onto the bus until it is ready; it is not recommended that more than 16 wait states be inserted onto the bus. By using the handshaking interface, the peripheral can signal to the DMAC that it is ready to transmit/receive data, and then the DMAC can access the peripheral without the peripheral inserting wait states onto the bus.

41.4.3 Handshaking Interface

Handshaking interfaces are used at the transaction level to control the flow of single or chunk transfers. The operation of the handshaking interface is different and depends on whether the peripheral or the DMAC is the flow controller.

The peripheral uses the handshaking interface to indicate to the DMAC that it is ready to transfer/accept data over the AMBA bus. A non-memory peripheral can request a DMAC transfer through the DMAC using one of two handshaking interfaces:

- Hardware handshaking
- Software handshaking

Software selects between the hardware or software handshaking interface on a per-channel basis. Software handshaking is accomplished through memory-mapped registers, while hardware handshaking is accomplished using a dedicated handshaking interface.

41.4.3.1 Software Handshaking

When the slave peripheral requires the DMAC to perform a DMAC transaction, it communicates this request by sending an interrupt to the CPU or interrupt controller.

The interrupt service routine then uses the software registers to initiate and control a DMAC transaction. These software registers are used to implement the software handshaking interface.

The SRC_H2SEL/DST_H2SEL bit in the DMAC_CFGx channel configuration register must be set to zero to enable software handshaking.

When the peripheral is not the flow controller, then the last transaction register DMAC_LAST is not used, and the values in these registers are ignored.

41.4.3.2 Chunk Transactions

Writing a 1 to the DMAC_CREQ[2x] register starts a source chunk transaction request, where x is the channel number. Writing a 1 to the DMAC_CREQ[2x+1] register starts a destination chunk transfer request, where x is the channel number.

Upon completion of the chunk transaction, the hardware clears the DMAC_CREQ[*2x*] or DMAC_CREQ[2x+1].

41.4.3.3 Single Transactions

Writing a 1 to the DMAC_SREQ[2x] register starts a source single transaction request, where x is the channel number. Writing a 1 to the DMAC_SREQ[2x+1] register starts a destination single transfer request, where x is the channel number.

Upon completion of the chunk transaction, the hardware clears the DMAC_SREQ[x] or DMAC_SREQ[2x+1].

Software can poll the relevant channel bit in the DMAC_CREQ[2x]/DMAC_CREQ[2x+1] and DMAC_SREQ[x]/DMAC_SREQ[2x+1] registers. When both are 0, then either the requested chunk or single transaction has completed.

41.4.4 DMAC Transfer Types

A DMAC transfer may consist of single or multi-buffers transfers. On successive buffers of a multi-buffer transfer, the DMAC_SADDRx/DMAC_DADDRx registers in the DMAC are reprogrammed using either of the following methods:

- Buffer chaining using linked lists
- Replay mode
- Contiguous address between buffers

On successive buffers of a multi-buffer transfer, the DMAC_CTRLAx and DMAC_CTRLBx registers in the DMAC are re-programmed using either of the following methods:

- Buffer chaining using linked lists
- Replay mode

When buffer chaining, using linked lists is the multi-buffer method of choice, and on successive buffers, the DMAC_DSCRx register in the DMAC is re-programmed using the following method:

- Buffer chaining using linked lists

A buffer descriptor (LLI) consists of following registers, DMAC_SADDRx, DMAC_DADDRx, DMAC_DSCRx, DMAC_CTRLAx, DMAC_CTRLBx.These registers, along with the DMAC_CFGx register, are used by the DMAC to set up and describe the buffer transfer.

41.4.4.1 Multi-buffer Transfers

41.4.4.2 Buffer Chaining Using Linked Lists

In this case, the DMAC re-programs the channel registers prior to the start of each buffer by fetching the buffer descriptor for that buffer from system memory. This is known as an LLI update.

DMAC buffer chaining is supported by using a Descriptor Pointer register (DMAC_DSCRx) that stores the address in memory of the next buffer descriptor. Each buffer descriptor contains the corresponding buffer descriptor (DMAC_SADDRx, DMAC_DADDRx, DMAC_DSCRx, DMAC_CTRLAx DMAC_CTRLBx).

To set up buffer chaining, a sequence of linked lists must be programmed in memory.

The DMAC_SADDRx, DMAC_DADDRx, DMAC_DSCRx, DMAC_CTRLAx and DMAC_CTRLBx registers are fetched from system memory on an LLI update. The updated content of the DMAC_CTRLAx register is written back to memory on buffer completion. Figure 41-5 on page 941 shows how to use chained linked lists in memory to define multi-buffer transfers using buffer chaining.

The Linked List multi-buffer transfer is initiated by programming DMAC_DSCRx with DSCRx(0) (LLI(0) base address) and DMAC_CTRLBx register with both SRC_DSCR and DST_DSCR set to 0. Other fields and registers are ignored and overwritten when the descriptor is retrieved from memory.

The last transfer descriptor must be written to memory with its next descriptor address set to 0.

Figure 41-5. Multi Buffer Transfer Using Linked List

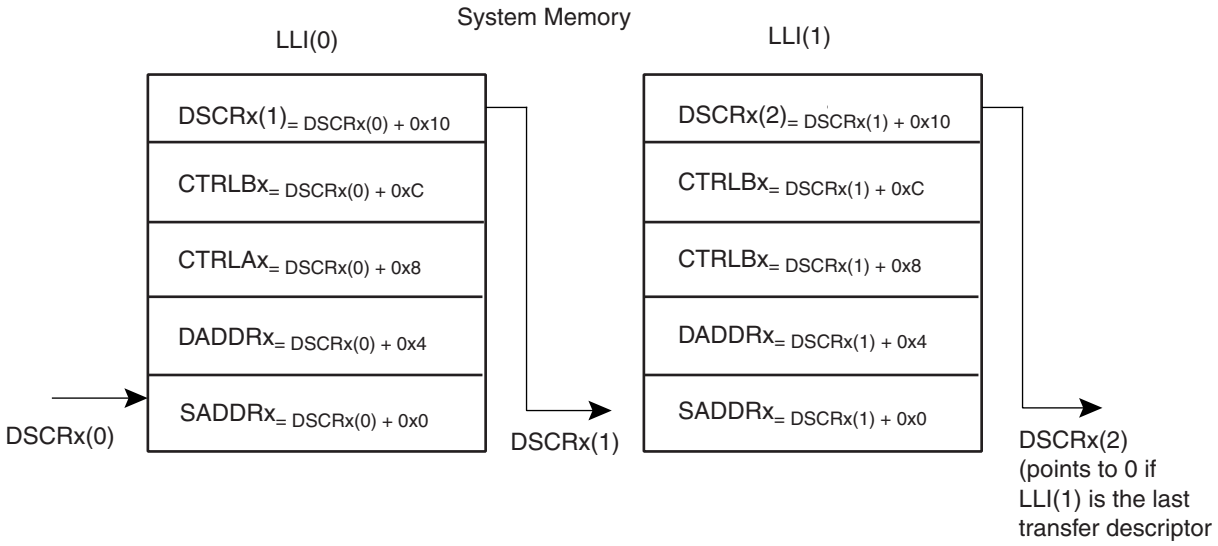

41.4.4.3 Programming DMAC for Multiple Buffer Transfers

Table 41-2. Multiple Buffers Transfer Management Table

Transfer Type	AUTO	SRC_REP	DST_REP	SRC_DSCR	DST_DSCR	BTSIZE	SADDR	DADDR	Other Fields
1) Single Buffer or Last buffer of a multiple buffer transfer	0	–	–	1	1	USR	USR	USR	USR
2) Multi Buffer transfer with contiguous DADDR	0	–	0	0	1	LLI	LLI	CONT	LLI
3) Multi Buffer transfer with contiguous SADDR	0	0	–	1	0	LLI	CONT	LLI	LLI
4) Multi Buffer transfer with LLI support	0	–	–	0	0	LLI	LLI	LLI	LLI
5) Multi Buffer transfer with DADDR reloaded	0	–	1	0	1	LLI	LLI	REP	LLI
6) Multi Buffer transfer with SADDR reloaded	0	1	–	1	0	LLI	REP	LLI	LLI
7) Multi Buffer transfer with BTSIZE reloaded and contiguous DADDR	1	–	0	0	1	REP	LLI	CONT	LLI
8) Multi Buffer transfer with BTSIZE reloaded and contiguous SADDR	1	0	–	1	0	REP	CONT	LLI	LLI
9) Automatic mode channel is stalling BTsize is reloaded	1	0	0	1	1	REP	CONT	CONT	REP
10) Automatic mode BTSIZE, SADDR and DADDR reloaded	1	1	1	1	1	REP	REP	REP	REP
11) Automatic mode BTSIZE, SADDR reloaded and DADDR contiguous	1	1	0	1	1	REP	REP	CONT	REP

Notes:
1. USR means that the register field is manually programmed by the user.
2. CONT means that address are contiguous.
3. REP means that the register field is updated with its previous value. If the transfer is the first one, then the user must manually program the value.
4. Channel stalled is true if the relevant BTC interrupt is not masked.
5. LLI means that the register field is updated with the content of the linked list item.

41.4.4.4 Replay Mode of Channel Registers

During automatic replay mode, the channel registers are reloaded with their initial values at the completion of each buffer and the new values used for the new buffer. Depending on the row number in Table 41-2 on page 942, some or all of the DMAC_SADDRx, DMAC_DADDRx, DMAC_CTRLAx and DMAC_CTRLBx channel registers are reloaded from their initial value at the start of a buffer transfer.

41.4.4.5 Contiguous Address Between Buffers

In this case, the address between successive buffers is selected to be a continuation from the end of the previous buffer. Enabling the source or destination address to be contiguous between buffers is a function of DMAC_CTRLAx.SRC_DSCR, DMAC_CFGx.SRC_REP, DMAC_CTRLAx.DST_DSCR and DMAC_CFGx.DST_REP registers.

41.4.4.6 Suspension of Transfers Between buffers

At the end of every buffer transfer, an end of buffer interrupt is asserted if:

- the channel buffer interrupt is unmasked, DMAC_EBCIMR.BTC[n] = ‘1’, where n is the channel number.

Note: The buffer complete interrupt is generated at the completion of the buffer transfer to the destination.

At the end of a chain of multiple buffers, an end of linked list interrupt is asserted if:

- the channel end of chained buffer interrupt is unmasked, DMAC_EBCIMR.CBTC[n] = ‘1’, when n is the channel number.

41.4.4.7 Ending Multi-buffer Transfers

All multi-buffer transfers must end as shown in Row 1 of Table 41-2 on page 942. At the end of every buffer transfer, the DMAC samples the row number, and if the DMAC is in Row 1 state, then the previous buffer transferred was the last buffer and the DMAC transfer is terminated.

For rows 9, 10 and 11 of Table 41-2 on page 942, (DMAC_DSCRx = 0 and DMAC_CTRLBx.AUTO is set), multi-buffer DMAC transfers continue until the automatic mode is disabled by writing a ‘1’ in DMAC_CTRLBx.AUTO bit. This bit should be programmed to zero in the end of buffer interrupt service routine that services the next-to-last buffer transfer. This puts the DMAC into Row 1 state.

For rows 2, 3, 4, 5, and 6 (DMAC_CRTLBx.AUTO cleared) the user must setup the last buffer descriptor in memory such that both LLI.DMAC_CTRLBx.SRC_DSCR and LLI.DMAC_CTRLBx.DST_DSCR are one and LLI.DMAC_DSCRx is set to 0.

41.4.5 Programming a Channel

Four registers, the DMAC_DSCRx, the DMAC_CTRLAx, the DMAC_CTRLBx and DMAC_CFGx, need to be programmed to set up whether single or multi-buffer transfers take place, and which type of multi-buffer transfer is used. The different transfer types are shown in Table 41-2 on page 942.

The “BTSIZE, SADDR and DADDR” columns indicate where the values of DMAC_SARx, DMAC_DARx, DMAC_CTLx, and DMAC_LLPx are obtained for the next buffer transfer when multi-buffer DMAC transfers are enabled.

41.4.5.1 Programming Examples

41.4.5.2 Single-buffer Transfer (Row 1)

1. Read the Channel Handler Status Register DMAC_CHSR.ENABLE Field to choose a free (disabled) channel.
2. Clear any pending interrupts on the channel from the previous DMAC transfer by reading the interrupt status register, DMAC_EBCISR.
3. Program the following channel registers:
   a. Write the starting source address in the DMAC_SADDRx register for channel x.
   b. Write the starting destination address in the DMAC_DADDRx register for channel x.
   c. Program DMAC_CTRLAx, DMAC_CTRLBx and DMAC_CFGx according to Row 1 as shown in Table 41-2 on page 942. Program the DMAC_CTRLBx register with both DST_DSCR and SRC_DSCR fields set to one and AUTO field set to 0.
   d. Write the control information for the DMAC transfer in the DMAC_CTRLAx and DMAC_CTRLBx registers for channel x. For example, in the register, you can program the following:
   – i. Set up the transfer type (memory or non-memory peripheral for source and destination) and flow control device by programming the FC of the DMAC_CTRLBx register.
   – ii. Set up the transfer characteristics, such as:
     – Transfer width for the source in the SRC_WIDTH field.
     – Transfer width for the destination in the DST_WIDTH field.
     – Source AHB Master interface layer in the SIF field where source resides.
     – Destination AHB Master Interface layer in the DIF field where destination resides.
     – Incrementing/decrementing or fixed address for source in SRC_INC field.
     – Incrementing/decrementing or fixed address for destination in DST_INC field.
   e. Write the channel configuration information into the DMAC_CFGx register for channel x.
   – i. Designate the handshaking interface type (hardware or software) for the source and destination peripherals. This is not required for memory. This step requires programming the SRC_H2SEL/DST_H2SEL bits, respectively. Writing a ‘1’ activates the hardware handshaking interface to handle source/destination requests. Writing a ‘0’ activates the software handshaking interface to handle source/destination requests.
   – ii. If the hardware handshaking interface is activated for the source or destination peripheral, assign a handshaking interface to the source and destination peripheral. This requires programming the SRC_PER and DST_PER bits, respectively.

f. If source picture-in-picture mode is enabled (DMAC_CTRLBx.SRC_PIP is enabled), program the DMAC_SPIPx register for channel x.

g. If destination picture-in-picture mode is enabled (DMAC_CTRLBx.DST_PIP is enabled), program the DMAC_DPIPx register for channel x.

4. After the DMAC selected channel has been programmed, enable the channel by writing a ‘1’ to the DMAC_CHER.ENABLE[n] bit, where n is the channel number. Make sure that bit 0 of DMAC_EN.ENABLE register is enabled.
5. Source and destination request single and chunk DMAC transactions to transfer the buffer of data (assuming non-memory peripherals). The DMAC acknowledges at the completion of every transaction (chunk and single) in the buffer and carry out the buffer transfer.
6. Once the transfer completes, hardware sets the interrupts and disables the channel. At this time you can either respond to the buffer Complete or Transfer Complete interrupts, or poll for the Channel Handler Status Register (DMAC_CHSR.ENABLE[n]) bit until it is cleared by hardware, to detect when the transfer is complete.

41.4.5.3 Multi-buffer Transfer with Linked List for Source and Linked List for Destination (Row 4)

1. Read the Channel Enable register to choose a free (disabled) channel.
2. Set up the chain of Linked List Items (otherwise known as buffer descriptors) in memory. Write the control information in the LLI.DMAC_CTRLAx and LLI.DMAC_CTRLBx registers location of the buffer descriptor for each LLI in memory (see Figure 41-6 on page 947) for channel x. For example, in the register, you can program the following:

   a. Set up the transfer type (memory or non-memory peripheral for source and destination) and flow control device by programming the FC of the DMAC_CTRLBx register.

   b. Set up the transfer characteristics, such as:

   – i. Transfer width for the source in the SRC_WIDTH field.

   – ii. Transfer width for the destination in the DST_WIDTH field.

   – iii. Source AHB master interface layer in the SIF field where source resides.

   – iv. Destination AHB master interface layer in the DIF field where destination resides.

   – v. Incrementing/decrementing or fixed address for source in SRC_INCR field.

   – vi. Incrementing/decrementing or fixed address for destination DST_INCR field.
3. Write the channel configuration information into the DMAC_CFGx register for channel x.

   a. Designate the handshaking interface type (hardware or software) for the source and destination peripherals. This is not required for memory. This step requires programming the SRC_H2SEL/DST_H2SEL bits, respectively. Writing a ‘1’ activates the hardware handshaking interface to handle source/destination requests for the specific channel. Writing a ‘0’ activates the software handshaking interface to handle source/destination requests.

   b. If the hardware handshaking interface is activated for the source or destination peripheral, assign the handshaking interface to the source and destination peripheral. This requires programming the SRC_PER and DST_PER bits, respectively.
4. Make sure that the LLI.DMAC_CTRLBx register locations of all LLI entries in memory (except the last) are set as shown in Row 4 of Table 41-2 on page 942. The LLI.DMAC_CTRLBx register of the last Linked List Item must be set as described in Row 1 of Table 41-2. Figure 41-5 on page 941 shows a Linked List example with two list items.
5. Make sure that the LLI.DMAC_DSCRx register locations of all LLI entries in memory (except the last) are non-zero and point to the base address of the next Linked List Item.
6. Make sure that the LLI.DMAC_SADDRx/LLI.DMAC_DADDRx register locations of all LLI entries in memory point to the start source/destination buffer address preceding that LLI fetch.
7. Make sure that the LLI.DMAC_CTRLAx.DONE field of the LLI.DMAC_CTRLAx register locations of all LLI entries in memory are cleared.

8. If source picture-picture mode is enabled (DMAC_CTRLBx.SRC_PIP is enabled), program the DMAC_SPIPx register for channel x.
9. If destination picture-in-picture is enabled (DMAC_CTRLBx.DST_PIP is enabled), program the DMAC_DPIPx register for channel x.
10. Clear any pending interrupts on the channel from the previous DMAC transfer by reading the status register: DMAC_EBCISR.
11. Program the DMAC_CTRLBx, DMAC_CFGx registers according to Row 4 as shown in Table 41-2 on page 942.
12. Program the DMAC_DSCRx register with DMAC_DSCRx(0), the pointer to the first Linked List item.
13. Finally, enable the channel by writing a '1' to the DMAC_CHER.ENABLE[n] bit, where n is the channel number. The transfer is performed.
14. The DMAC fetches the first LLI from the location pointed to by DMAC_DSCRx(0).

Note: The LLI.DMAC_SADDRx, LLI. DMAC_DADDRx, LLI.DMAC_DSCRx, LLI.DMAC_CTRLAx and LLI.DMAC_CTRLBx registers are fetched. The DMAC automatically reprograms the DMAC_SADDRx, DMAC_DADDRx, DMAC_DSCRx, DMAC_CTRLBx and DMAC_CTRLAx channel registers from the DMAC_DSCRx(0).

15. Source and destination request single and chunk DMAC transactions to transfer the buffer of data (assuming non-memory peripheral). The DMAC acknowledges at the completion of every transaction (chunk and single) in the buffer and carry out the buffer transfer.
16. Once the buffer of data is transferred, the DMAC_CTRLAx register is written out to system memory at the same location and on the same layer (DMAC_DSCRx.DSCR_IF) where it was originally fetched, that is, the location of the DMAC_CTRLAx register of the linked list item fetched prior to the start of the buffer transfer. Only DMAC_CTRLAx register is written out because only the DMAC_CTRLAx.BTSIZE and DMAC_CTRLAX.DONE bits have been updated by DMAC hardware. Additionally, the DMAC_CTRLAx.DONE bit is asserted when the buffer transfer has completed.

Note: Do not poll the DMAC_CTRLAx.DONE bit in the DMAC memory map. Instead, poll the LLI.DMAC_CTRLAx.DONE bit in the LLI for that buffer. If the poll LLI.DMAC_CTRLAx.DONE bit is asserted, then this buffer transfer has completed. This LLI.DMAC_CTRLAx.DONE bit was cleared at the start of the transfer.

17. The DMAC does not wait for the buffer interrupt to be cleared, but continues fetching the next LLI from the memory location pointed to by current DMAC_DSCRx register and automatically reprograms the DMAC_SADDRx, DMAC_DADDRx, DMAC_DSCRx, DMAC_CTRLAx and DMAC_CTRLBx channel registers. The DMAC transfer continues until the DMAC determines that the DMAC_CTRLBx and DMAC_DSCRx registers at the end of a buffer transfer match described in Row 1 of Table 41-2 on page 942. The DMAC then knows that the previous buffer transferred was the last buffer in the DMAC transfer. The DMAC transfer might look like that shown in Figure 41-6 on page 947.

Figure 41-6. Multi-buffer with Linked List Address for Source and Destination

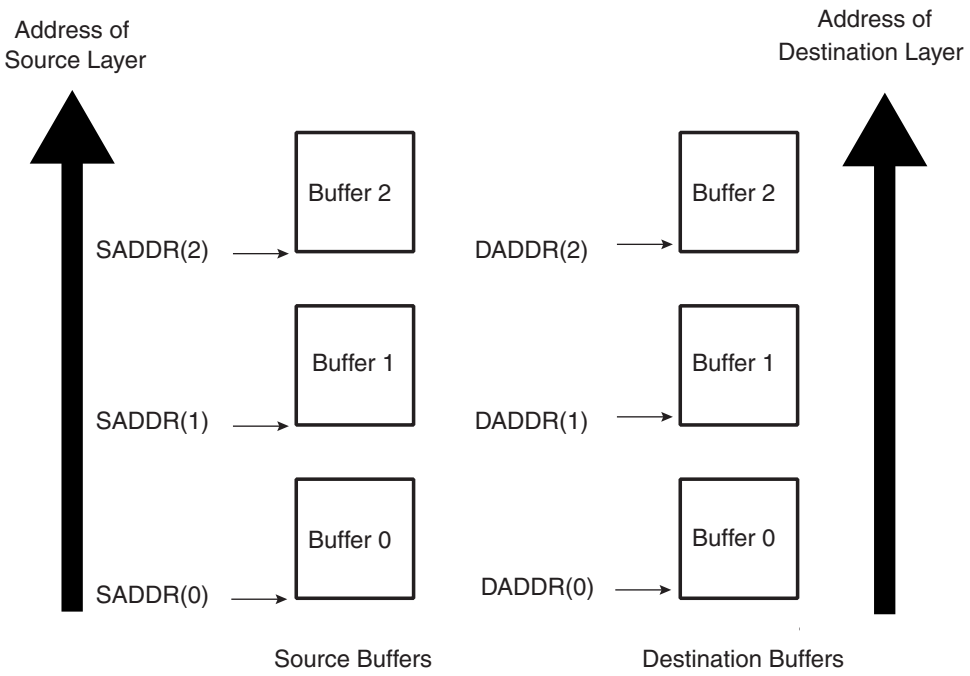

If the user needs to execute a DMAC transfer where the source and destination address are contiguous but the amount of data to be transferred is greater than the maximum buffer size DMAC_CTRLAx.BTSIZE, then this can be achieved using the type of multi-buffer transfer as shown in Figure 41-7 on page 947.

Figure 41-7. Multi-buffer with Linked Address for Source and Destination Buffers are Contiguous

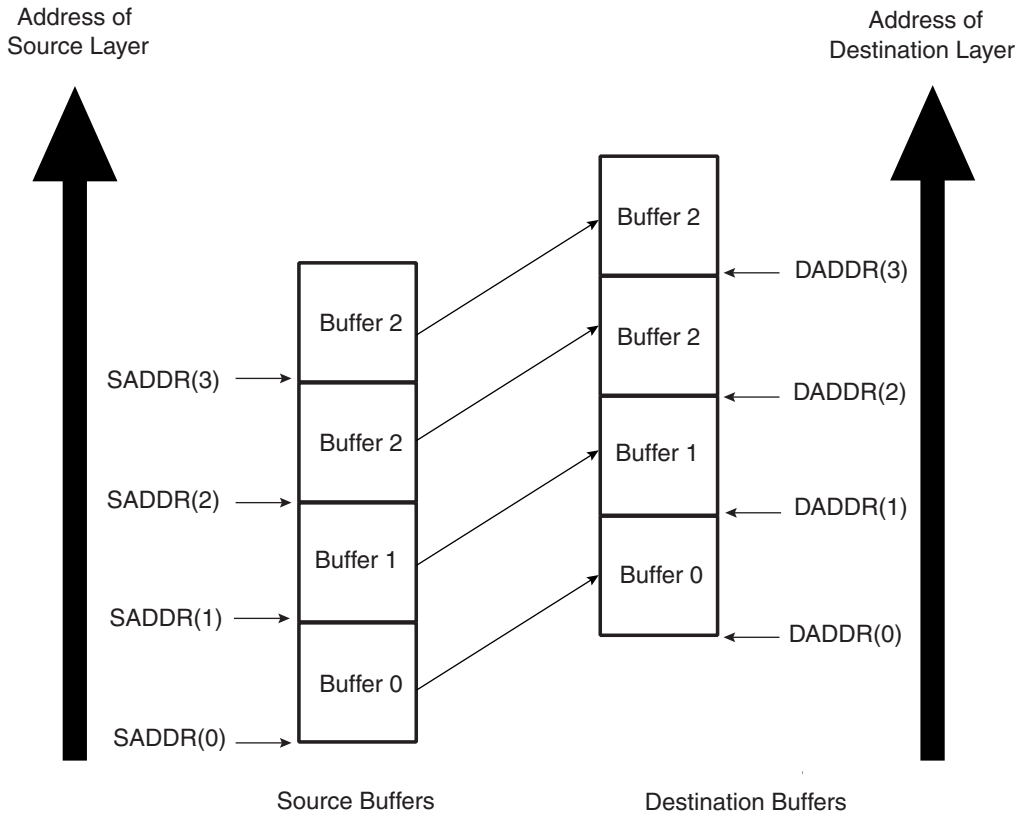

The DMAC transfer flow is shown in Figure 41-8 on page 948.

Figure 41-8. DMAC Transfer Flow for Source and Destination Linked List Address

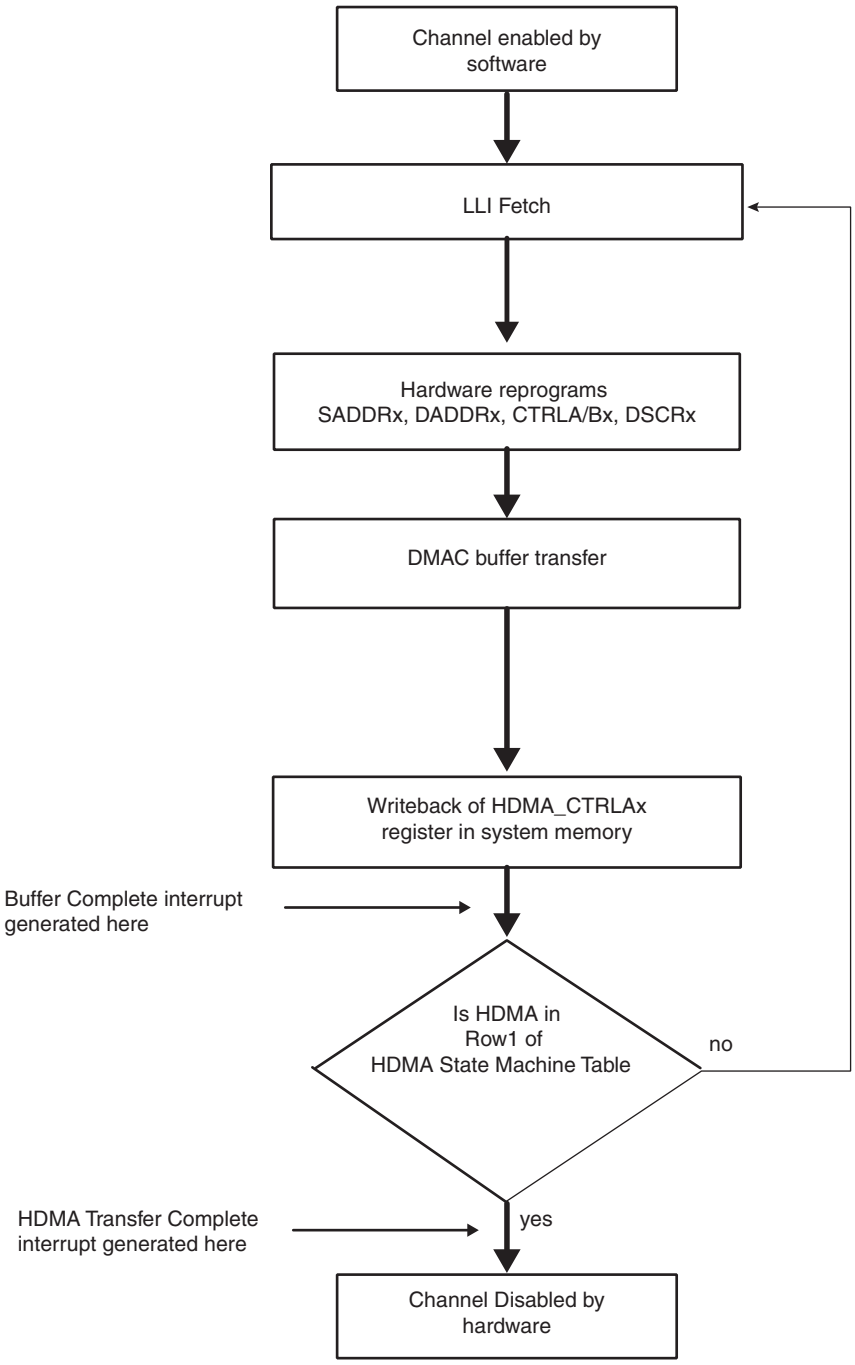

41.4.5.4 Multi-buffer Transfer with Source Address Auto-reloaded and Destination Address Auto-reloaded (Row 10)

1. Read the Channel Enable register to choose an available (disabled) channel.
2. Clear any pending interrupts on the channel from the previous DMAC transfer by reading the interrupt status register. Program the following channel registers:

a. Write the starting source address in the DMAC_SADDRx register for channel x.
b. Write the starting destination address in the DMAC_DADDRx register for channel x.
c. Program DMAC_CTRLAx, DMAC_CTRLBx and DMAC_CFGx according to Row 10 as shown in Table 41-2 on page 942. Program the DMAC_DSCRx register with ‘0’.
d. Write the control information for the DMAC transfer in the DMAC_CTRLAx and DMAC_CTRLBx register for channel x. For example, in the register, you can program the following:
– i. Set up the transfer type (memory or non-memory peripheral for source and destination) and flow control device by programming the FC of the DMAC_CTRLBx register.
– ii. Set up the transfer characteristics, such as:
  – Transfer width for the source in the SRC_WIDTH field.
  – Transfer width for the destination in the DST_WIDTH field.
  – Source AHB master interface layer in the SIF field where source resides.
  – Destination AHB master interface layer in the DIF field where destination resides.
  – Incrementing/decrementing or fixed address for source in SRC_INCR field.
  – Incrementing/decrementing or fixed address for destination in DST_INCR field.
e. If source picture-in-picture mode is enabled (DMAC_CTRLBx.SPIP is enabled), program the DMAC_SPIPx register for channel x.
f. If destination picture-in-picture is enabled (DMAC_CTRLBx.DPIP), program the DMAC_DPIPx register for channel x.
g. Write the channel configuration information into the DMAC_CFGx register for channel x. Ensure that the reload bits, DMAC_CFGx.SRC_REP, DMAC_CFGx.DST_REP and DMAC_CTRLBx.AUTO are enabled.
– i. Designate the handshaking interface type (hardware or software) for the source and destination peripherals. This is not required for memory. This step requires programming the SRC_H2SEL/DST_h2SEL bits, respectively. Writing a ‘1’ activates the hardware handshaking interface to handle source/destination requests for the specific channel. Writing a ‘0’ activates the software handshaking interface to handle source/destination requests.
– ii. If the hardware handshaking interface is activated for the source or destination peripheral, assign handshaking interface to the source and destination peripheral. This requires programming the SRC_PER and DST_PER bits, respectively.

3. After the DMAC selected channel has been programmed, enable the channel by writing a ‘1’ to the DMAC_CHER.ENABLE[n] bit where is the channel number. Make sure that bit 0 of the DMAC_EN register is enabled.
4. Source and destination request single and chunk DMAC transactions to transfer the buffer of data (assuming non-memory peripherals). The DMAC acknowledges on completion of each chunk/single transaction and carry out the buffer transfer.
5. When the buffer transfer has completed, the DMAC reloads the DMAC_SADDRx, DMAC_DADDRx and DMAC_CTRLAx registers. Hardware sets the buffer Complete interrupt. The DMAC then samples the row number as shown in Table 41-2 on page 942. If the DMAC is in Row 1, then the DMAC transfer has completed. Hardware sets the transfer complete interrupt and disables the channel. So you can either respond to the Buffer Complete or Chained buffer transfer Complete interrupts, or poll for the Channel Enable in the Channel Status Register (DMAC_CHSR.ENABLE[n]) until it is disabled, to detect when the transfer is complete. If the DMAC is not in Row 1, the next step is performed.
6. The DMAC transfer proceeds as follows:
   a. If interrupts is un-masked (DMAC_EBCIMR.BTC[x] = ‘1’, where x is the channel number) hardware sets the buffer complete interrupt when the buffer transfer has completed. It then stalls until the STALLED[n] bit of DMAC_CHSR register is cleared by software, writing ‘1’ to DMAC_CHER.KEEPON[n] bit where n is the channel number. If the next buffer is to be the last buffer

in the DMAC transfer, then the buffer complete ISR (interrupt service routine) should clear the automatic mode bit in the DMAC_CTRLBx.AUTO bit. This put the DMAC into Row 1 as shown in Table 41-2 on page 942. If the next buffer is not the last buffer in the DMAC transfer, then the reload bits should remain enabled to keep the DMAC in Row 4.

b. If the buffer complete interrupt is masked (DMAC_EBCIMR.BTC[x] = ‘1’, where x is the channel number), then hardware does not stall until it detects a write to the buffer complete interrupt enable register DMAC_EBCIER register but starts the next buffer transfer immediately. In this case software must clear the automatic mode bit in the DMAC_CTRLB to put the DMAC into ROW 1 of Table 41-2 on page 942 before the last buffer of the DMAC transfer has completed. The transfer is similar to that shown in Figure 41-9 on page 950. The DMAC transfer flow is shown in Figure 41-10 on page 951.

Figure 41-9. Multi-buffer DMAC Transfer with Source and Destination Address Auto-reloaded

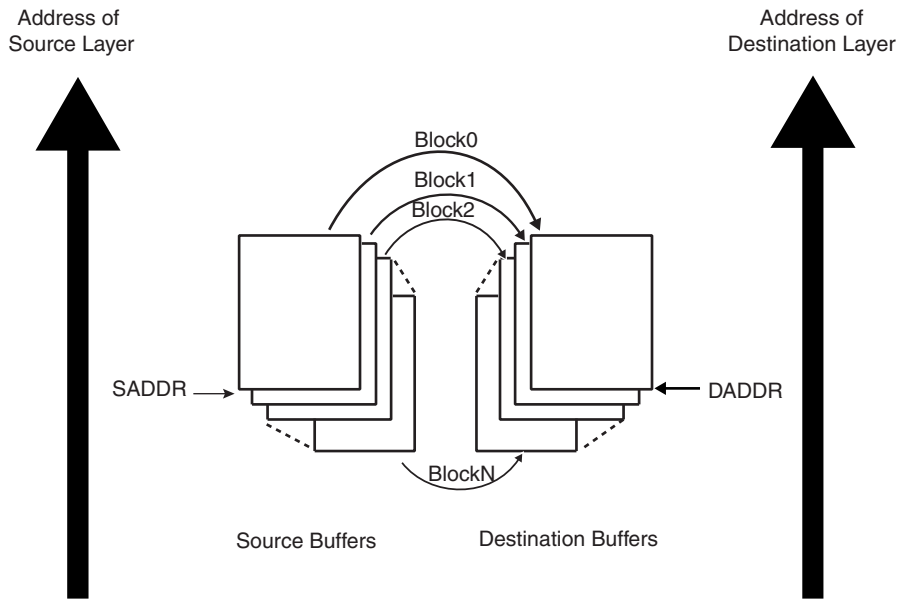

Figure 41-10. DMAC Transfer Flow for Source and Destination Address Auto-reloaded

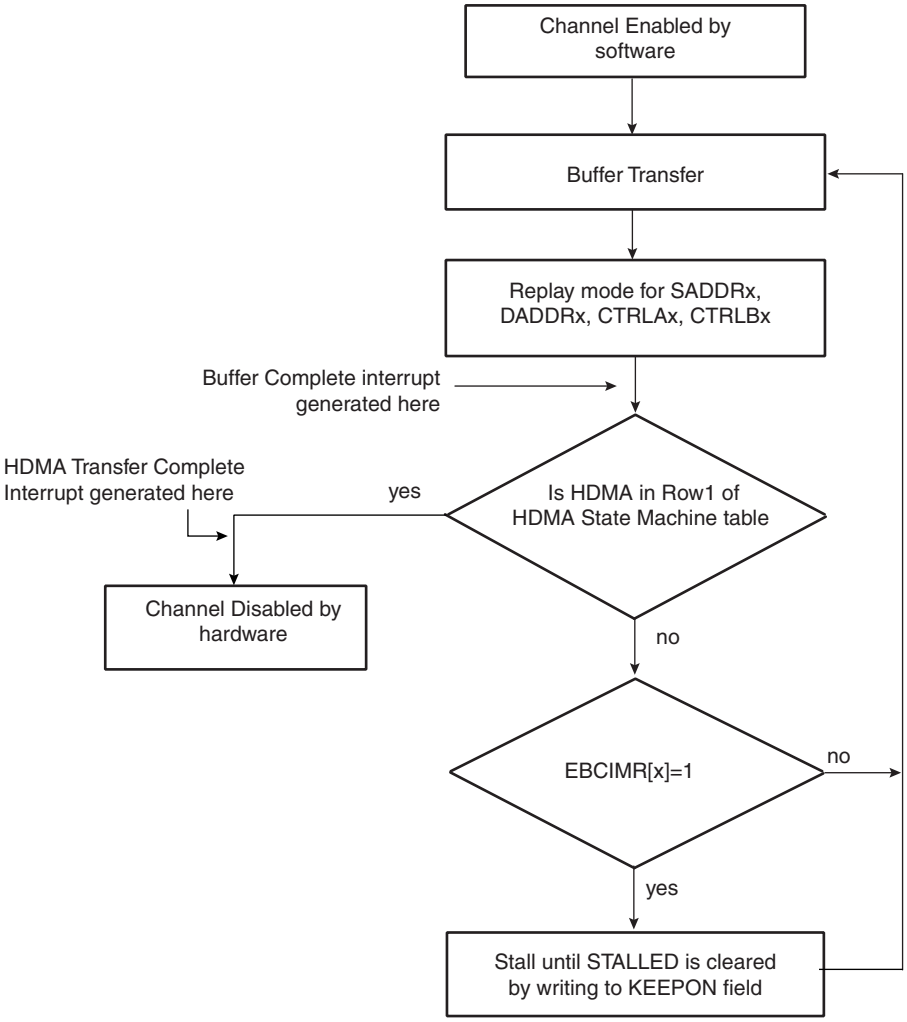

41.4.5.5 Multi-buffer Transfer with Source Address Auto-reloaded and Linked List Destination Address (Row 6)

1. Read the Channel Enable register to choose a free (disabled) channel.
2. Set up the chain of linked list items (otherwise known as buffer descriptors) in memory. Write the control information in the LLI.DMAC_CTRLAx and DMAC_CTRLBx registers location of the buffer descriptor for each LLI in memory for channel x. For example, in the register you can program the following:
   a. Set up the transfer type (memory or non-memory peripheral for source and destination) and flow control peripheral by programming the FC of the DMAC_CTRLBx register.
   b. Set up the transfer characteristics, such as:
   – i. Transfer width for the source in the SRC_WIDTH field.
   – ii. Transfer width for the destination in the DST_WIDTH field.
   – iii. Source AHB master interface layer in the SIF field where source resides.
   – iv. Destination AHB master interface layer in the DIF field where destination resides.
   – v. Incrementing/decrementing or fixed address for source in SRC_INCR field.
   – vi. Incrementing/decrementing or fixed address for destination DST_INCR field.
3. Write the starting source address in the DMAC_SADDRx register for channel x.

Note: The values in the LLI.DMAC_SADDRx register locations of each of the Linked List Items (LLIs) setup up in memory, although fetched during a LLI fetch, are not used.

4. Write the channel configuration information into the DMAC_CFGx register for channel x.
   a. Designate the handshaking interface type (hardware or software) for the source and destination peripherals. This is not required for memory. This step requires programming the SRC_H2SEL/DST_H2SEL bits, respectively. Writing a ‘1’ activates the hardware handshaking interface to handle source/destination requests for the specific channel. Writing a ‘0’ activates the software handshaking interface source/destination requests.
   b. If the hardware handshaking interface is activated for the source or destination peripheral, assign handshaking interface to the source and destination peripheral. This requires programming the SRC_PER and DST_PER bits, respectively.
5. Make sure that the LLI.DMAC_CTRLBx register locations of all LLIs in memory (except the last) are set as shown in Row 6 of Table 41-2 on page 942 while the LLI.DMAC_CTRLBx register of the last Linked List item must be set as described in Row 1 of Table 41-2. Figure 41-5 on page 941 shows a Linked List example with two list items.
6. Make sure that the LLI.DMAC_DSCRx register locations of all LLIs in memory (except the last) are non-zero and point to the next Linked List Item.
7. Make sure that the LLI.DMAC_DADDRx register location of all LLIs in memory point to the start destination buffer address proceeding that LLI fetch.
8. Make sure that the LLI.DMAC_CTLx.DONE field of the LLI.DMAC_CTRLA register locations of all LLIs in memory is cleared.
9. If source picture-in-picture is enabled (DMAC_CTRLBx.SPIP is enabled), program the DMAC_SPIPx register for channel x.
10. If destination picture-in-picture is enabled (DMAC_CTRLBx.DPIP is enabled), program the DMAC_DPIPx register for channel x.
11. Clear any pending interrupts on the channel from the previous DMAC transfer by reading to the DMAC_EBCISR register.
12. Program the DMAC_CTLx, DMAC_CFGx registers according to Row 6 as shown in Table 41-2 on page 942.
13. Program the DMAC_DSCRx register with DMAC_DSCRx(0), the pointer to the first Linked List item.
14. Finally, enable the channel by writing a ‘1’ to the DMAC_CHER.ENABLE[n] bit where n is the channel number. The transfer is performed. Make sure that bit 0 of the DMAC_EN register is enabled.
15. The DMAC fetches the first LLI from the location pointed to by DMAC_DSCRx(0).

Note: The LLI.DMAC_SADDRx, LLI.DMAC_DADDRx, LLI. DMAC_LLPx LLI.DMAC_CTRLAx and LLI.DMAC_CTRLBx registers are fetched. The LLI.DMAC_SADDRx register although fetched is not used.

16. Source and destination request single and chunk DMAC transactions to transfer the buffer of data (assuming non-memory peripherals). DMAC acknowledges at the completion of every transaction (chunk and single) in the buffer and carry out the buffer transfer.
17. The DMAC_CTRLAx register is written out to system memory. The DMAC_CTRLAx register is written out to the same location on the same layer (DMAC_DSCRx.DSCR_IF) where it was originally fetched, that is the location of the DMAC_CTRLAx register of the linked list item fetched prior to the start of the buffer transfer. Only DMAC_CTRLAx register is written out, because only the DMAC_CTRLAx.BTSIZE and DMAC_CTRLAx.DONE fields have been updated by hardware within the DMAC. The LLI.DMAC_CTRLAx.DONE bit is asserted to indicate buffer completion Therefore, software can poll the LLI.DMAC_CTRLAx.DONE field of the DMAC_CTRLAx register in the LLi to ascertain when a buffer transfer has completed.

Note: Do not poll the DMAC_CTRLAx.DONE bit in the DMAC memory map. Instead poll the LLI.DMAC_CTRLAx.DONE bit in the LLI for that buffer. If the polled LLI.DMAC_CTRLAx.DONE bit is asserted, then this buffer transfer has completed. This LLI.DMAC_CTRLA.DONE bit was cleared at the start of the transfer.

18. The DMAC reloads the DMAC_SADDRx register from the initial value. Hardware sets the buffer complete interrupt. The DMAC samples the row number as shown in Table 41-2 on page 942. If the DMAC is in Row 1, then the DMAC transfer has completed. Hardware sets the transfer complete interrupt and disables the channel. You can either respond to the Buffer Complete or Chained buffer Transfer Complete

interrupts, or poll for the Channel Enable (DMAC_CHSR.ENABLE) bit until it is cleared by hardware, to detect when the transfer is complete. If the DMAC is not in Row 1 as shown in Table 41-2 on page 942, the following step is performed.

19. The DMAC fetches the next LLI from memory location pointed to by the current DMAC_DSCRx register, and automatically reprograms the DMAC_DADDRx, DMAC_CTRLAx, DMAC_CTRLBx and DMAC_DSCRx channel registers. Note that the DMAC_SADDRx is not re-programmed as the reloaded value is used for the next DMAC buffer transfer. If the next buffer is the last buffer of the DMAC transfer then the DMAC_CTRLBx and DMAC_DSCRx registers just fetched from the LLI should match Row 1 of Table 41-2 on page 942. The DMAC transfer might look like that shown in Figure 41-11 on page 953.

Figure 41-11. Multi-buffer DMAC Transfer with Source Address Auto-reloaded and Linked List Destination Address

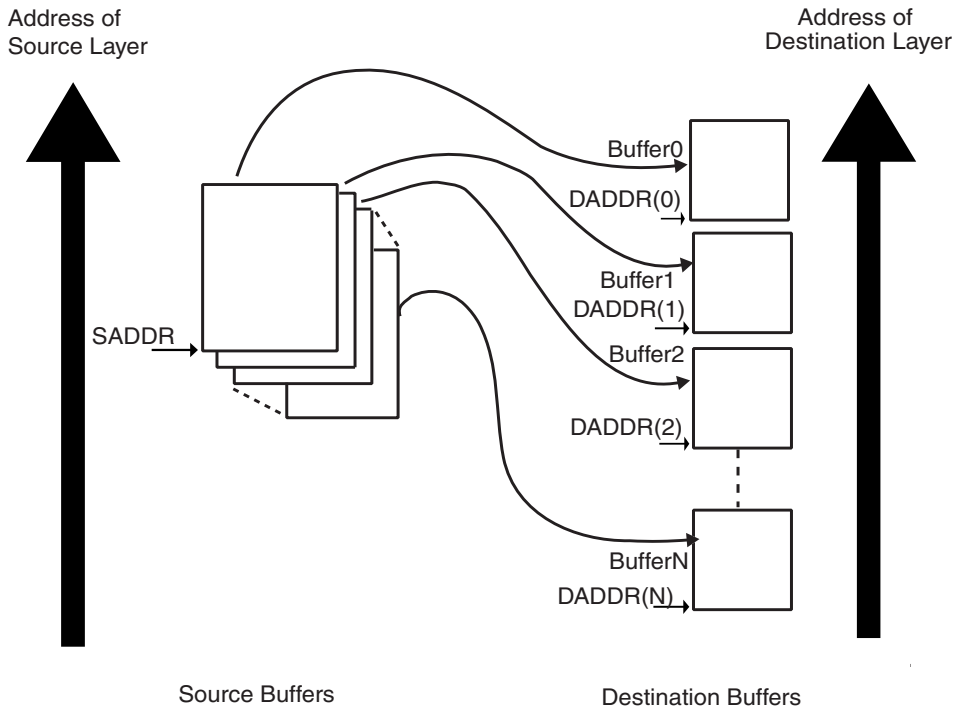

The DMAC Transfer flow is shown in Figure 41-12 on page 954.

Figure 41-12. DMAC Transfer Flow for Replay Mode at Source and Linked List Destination Address

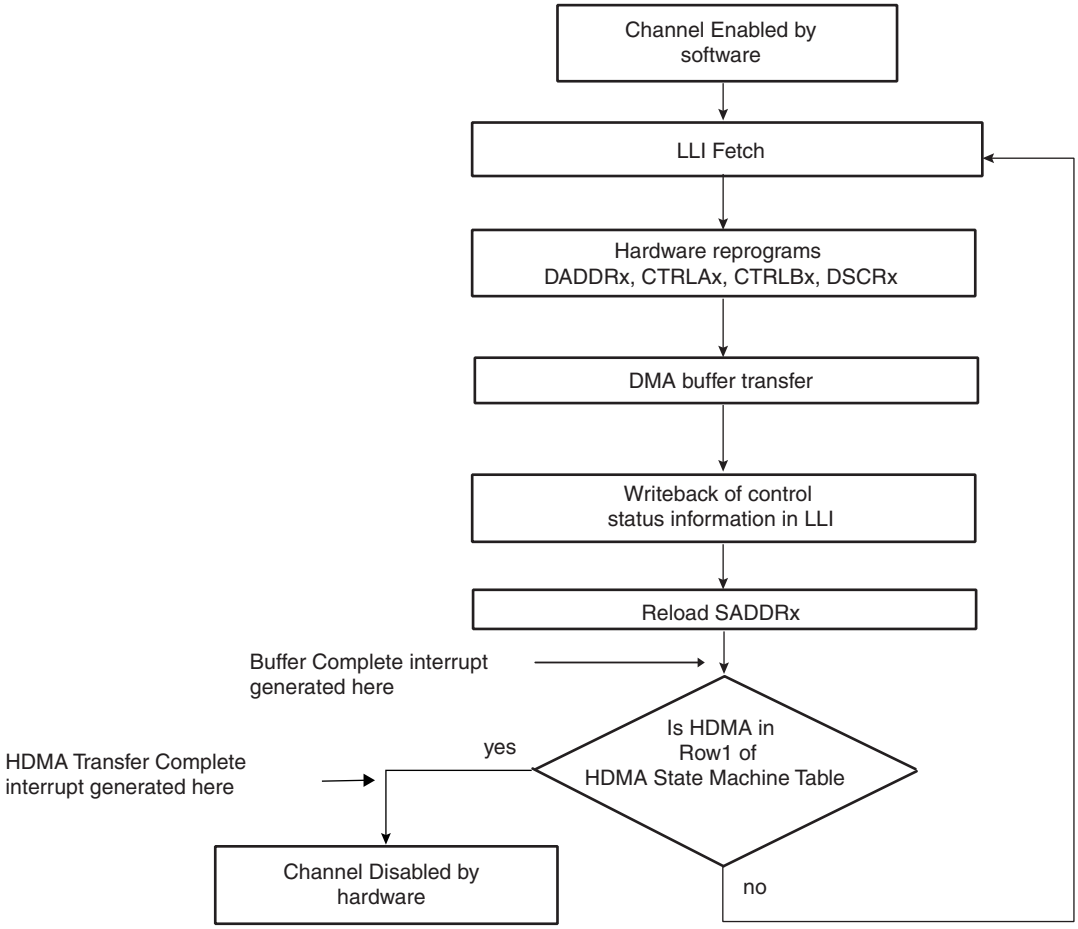

41.4.5.6 Multi-buffer Transfer with Source Address Auto-reloaded and Contiguous Destination Address (Row 11)

1. Read the Channel Enable register to choose a free (disabled) channel.
2. Clear any pending interrupts on the channel from the previous DMAC transfer by reading to the Interrupt Status Register.
3. Program the following channel registers:
   a. Write the starting source address in the DMAC_SADDRx register for channel x.
   b. Write the starting destination address in the DMAC_DADDRx register for channel x.
   c. Program DMAC_CTRLAx, DMAC_CTRLBx and DMAC_CFGx according to Row 11 as shown in Table 41-2 on page 942. Program the DMAC_DSCRx register with ‘0’. DMAC_CTRLBx.AUTO field is set to ‘1’ to enable automatic mode support.
   d. Write the control information for the DMAC transfer in the DMAC_CTRLBx and DMAC_CTRLAx register for channel x. For example, in this register, you can program the following:
   – i. Set up the transfer type (memory or non-memory peripheral for source and destination) and flow control device by programming the FC of the DMAC_CTRLBx register.
   – ii. Set up the transfer characteristics, such as:
      – Transfer width for the source in the SRC_WIDTH field.
      – Transfer width for the destination in the DST_WIDTH field.

– Source AHB master interface layer in the SIF field where source resides.
– Destination AHB master interface master layer in the DIF field where destination resides.
– Incrementing/decrementing or fixed address for source in SRC_INCR field.
– Incrementing/decrementing or fixed address for destination in DST_INCR field.

e. If source picture-in-picture is enabled (DMAC_CTRLBx.SPIP is enabled), program the DMAC_SPIPx register for channel x.

f. If destination picture-in-picture is enabled (DMAC_CTRLBx.DPIP), program the DMAC_DPIPx register for channel x.

g. Write the channel configuration information into the DMAC_CFGx register for channel x.

– i. Designate the handshaking interface type (hardware or software) for the source and destination peripherals. This is not required for memory. This step requires programming the SRC_H2SEL/DST_H2SEL bits, respectively. Writing a ‘1’ activates the hardware handshaking interface to handle source/destination requests for the specific channel. Writing a ‘0’ activates the software handshaking interface to handle source/destination requests.

– ii. If the hardware handshaking interface is activated for the source or destination peripheral, assign handshaking interface to the source and destination peripheral. This requires programming the SRC_PER and DST_PER bits, respectively.

4. After the DMAC channel has been programmed, enable the channel by writing a ‘1’ to the DMAC_CHER.ENABLE[n] bit where n is the channel number. Make sure that bit 0 of the DMAC_EN.ENABLE register is enabled.
5. Source and destination request single and chunk DMAC transactions to transfer the buffer of data (assuming non-memory peripherals). The DMAC acknowledges at the completion of every transaction (chunk and single) in the buffer and carries out the buffer transfer.
6. When the buffer transfer has completed, the DMAC reloads the DMAC_SADDRx register. The DMAC_DADDRx register remains unchanged. Hardware sets the buffer complete interrupt. The DMAC then samples the row number as shown in Table 41-2 on page 942. If the DMAC is in Row 1, then the DMAC transfer has completed. Hardware sets the transfer complete interrupt and disables the channel. So you can either respond to the Buffer Complete or Transfer Complete interrupts, or poll for ENABLE field in the Channel Status Register (DMAC_CHSR.ENABLE[n] bit) until it is cleared by hardware, to detect when the transfer is complete. If the DMAC is not in Row 1, the next step is performed.
7. The DMAC transfer proceeds as follows:
   a. If the buffer complete interrupt is un-masked (DMAC_EBCIMR.BTC[x] = ‘1’, where x is the channel number) hardware sets the buffer complete interrupt when the buffer transfer has completed. It then stalls until STALLED[n] bit of DMAC_CHSR is cleared by writing in the KEEPON[n] field of DMAC_CHER register where n is the channel number. If the next buffer is to be the last buffer in the DMAC transfer, then the buffer complete ISR (interrupt service routine) should clear the automatic mode bit, DMAC_CTRLBx.AUTO. This puts the DMAC into Row 1 as shown in Table 41-2 on page 942. If the next buffer is not the last buffer in the DMAC transfer then the automatic transfer mode bit should remain enabled to keep the DMAC in Row 11 as shown in Table 41-2 on page 942.
   b. If the buffer complete interrupt is masked (DMAC_EBCIMR.BTC[x] = ‘1’, where x is the channel number) then hardware does not stall until it detects a write to the buffer transfer completed interrupt enable register but starts the next buffer transfer immediately. In this case software must clear the automatic mode bit, DMAC_CTRLBx.AUTO, to put the device into ROW 1 of Table 41-2 on page 942 before the last buffer of the DMAC transfer has completed.

The transfer is similar to that shown in Figure 41-13 on page 956.

The DMAC Transfer flow is shown in Figure 41-14 on page 957.

Figure 41-13. Multi-buffer Transfer with Source Address Auto-reloaded and Contiguous Destination Address

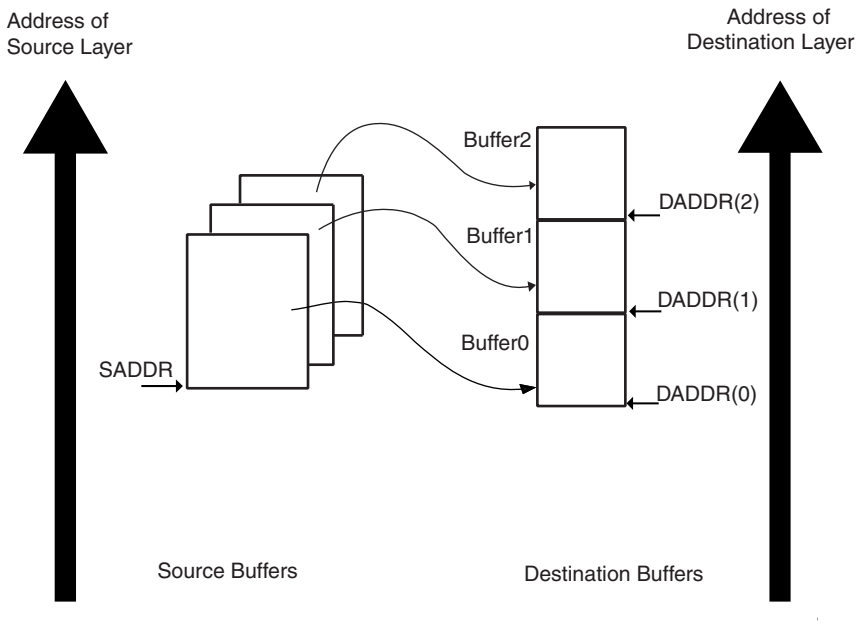

Figure 41-14. DMAC Transfer Replay Mode is Enabled for the Source and Contiguous Destination Address

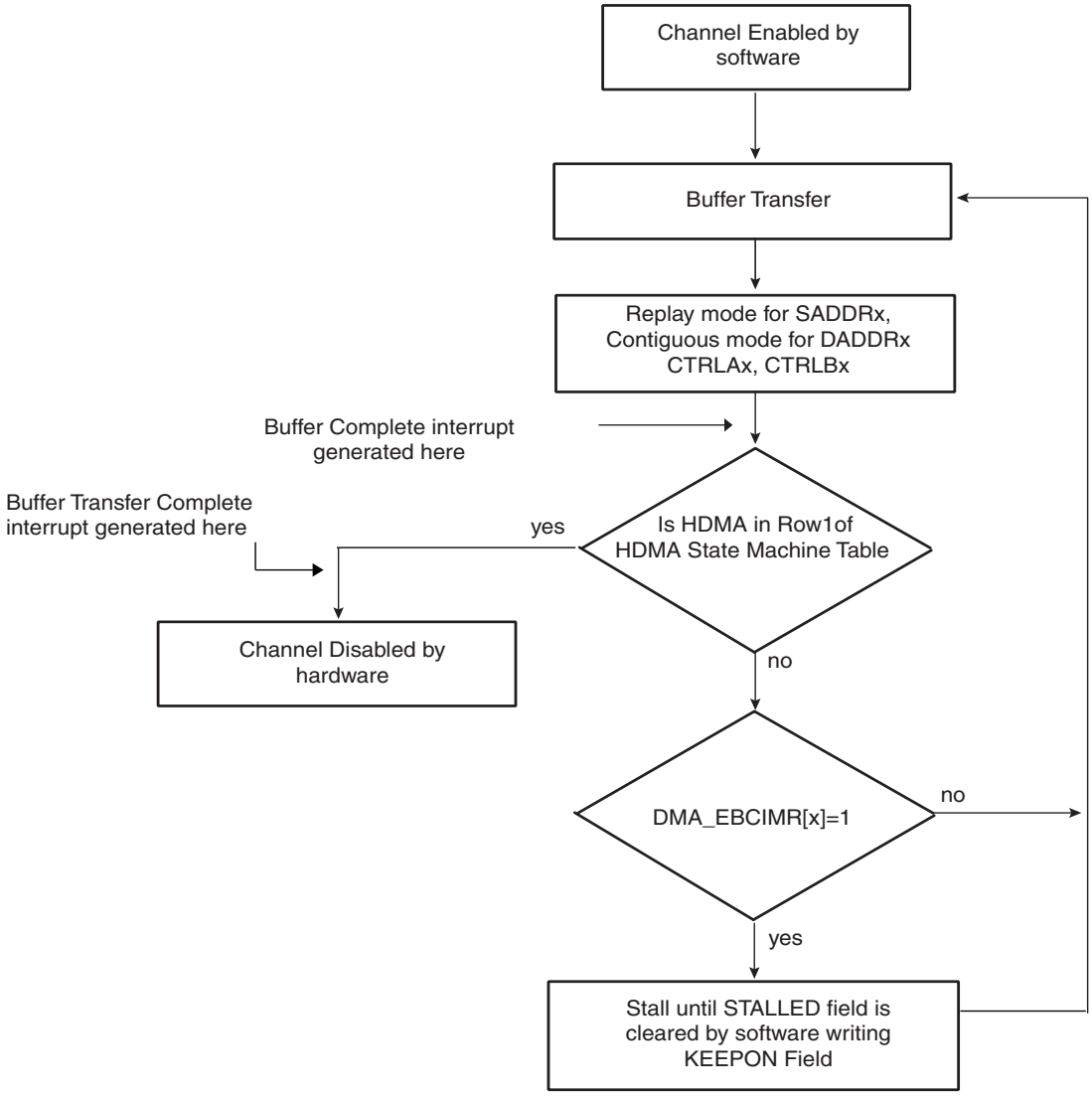

41.4.5.7 Multi-buffer DMAC Transfer with Linked List for Source and Contiguous Destination Address (Row 2)

1. Read the Channel Enable register to choose a free (disabled) channel.
2. Set up the linked list in memory. Write the control information in the LLI.DMAC_CTRLAx and LLI.DMAC_CTRLBx register location of the buffer descriptor for each LLI in memory for channel x. For example, in the register, you can program the following:
   a. Set up the transfer type (memory or non-memory peripheral for source and destination) and flow control device by programming the FC of the DMAC_CTRLBx register.
   b. Set up the transfer characteristics, such as:
   – i. Transfer width for the source in the SRC_WIDTH field.
   – ii. Transfer width for the destination in the DST_WIDTH field.
   – iii. Source AHB master interface layer in the SIF field where source resides.
   – iv. Destination AHB master interface layer in the DIF field where destination resides.
   – v. Incrementing/decrementing or fixed address for source in SRC_INCR field.
   – vi. Incrementing/decrementing or fixed address for destination DST_INCR field.
3. Write the starting destination address in the DMAC_DADDRx register for channel x.

Note: The values in the LLI.DMAC_DADDRx register location of each Linked List Item (LLI) in memory, although fetched during an LLI fetch, are not used.

4. Write the channel configuration information into the DMAC_CFGx register for channel x.
   a. Designate the handshaking interface type (hardware or software) for the source and destination peripherals. This is not required for memory. This step requires programming the SRC_H2SEL/DST_H2SEL bits, respectively. Writing a ‘1’ activates the hardware handshaking interface to handle source/destination requests for the specific channel. Writing a ‘0’ activates the software handshaking interface to handle source/destination requests.
   b. If the hardware handshaking interface is activated for the source or destination peripheral, assign handshaking interface to the source and destination peripherals. This requires programming the SRC_PER and DST_PER bits, respectively.
5. Make sure that all LLI.DMAC_CTRLBx register locations of the LLI (except the last) are set as shown in Row 2 of Table 41-2 on page 942, while the LLI.DMAC_CTRLBx register of the last Linked List item must be set as described in Row 1 of Table 41-2. Figure 41-5 on page 941 shows a Linked List example with two list items.
6. Make sure that the LLI.DMAC_DSCRx register locations of all LLIs in memory (except the last) are non-zero and point to the next Linked List Item.
7. Make sure that the LLI.DMAC_SADDRx register location of all LLIs in memory point to the start source buffer address proceeding that LLI fetch.
8. Make sure that the LLI.DMAC_CTRLAx.DONE field of the LLI.DMAC_CTRLAx register locations of all LLIs in memory is cleared.
9. If source picture-in-picture is enabled (DMAC_CTRLBx.SPIP is enabled), program the DMAC_SPIPx register for channel x.
10. If destination picture-in-picture is enabled (DMAC_CTRLBx.DPIP is enabled), program the DMAC_DPIPx register for channel x.
11. Clear any pending interrupts on the channel from the previous DMAC transfer by reading the interrupt status register.
12. Program the DMAC_CTRLAx, DMAC_CTRLBx and DMAC_CFGx registers according to Row 2 as shown in Table 41-2 on page 942
13. Program the DMAC_DSCRx register with DMAC_DSCRx(0), the pointer to the first Linked List item.
14. Finally, enable the channel by writing a ‘1’ to the DMAC_CHER.ENABLE[n] bit. The transfer is performed. Make sure that bit 0 of the DMAC_EN register is enabled.
15. The DMAC fetches the first LLI from the location pointed to by DMAC_DSCRx(0).

Note: The LLI.DMAC_SADDRx, LLI.DMAC_DADDRx, LLI.DMAC_DSCRx and LLI.DMAC_CTRLA/Bx registers are fetched. The LLI.DMAC_DADDRx register location of the LLI although fetched is not used. The DMAC_DADDRx register in the DMAC remains unchanged.

16. Source and destination requests single and chunk DMAC transactions to transfer the buffer of data (assuming non-memory peripherals). The DMAC acknowledges at the completion of every transaction (chunk and single) in the buffer and carry out the buffer transfer
17. Once the buffer of data is transferred, the DMAC_CTRLAx register is written out to system memory at the same location and on the same layer (DMAC_DSCRx.DSCR_IF) where it was originally fetched, that is, the location of the DMAC_CTRLAx register of the linked list item fetched prior to the start of the buffer transfer. Only DMAC_CTRLAx register is written out because only the DMAC_CTRLAx.BTSIZE and DMAC_CTRLAX.DONE fields have been updated by DMAC hardware. Additionally, the DMAC_CTRLAx.DONE bit is asserted when the buffer transfer has completed.

Note: Do not poll the DMAC_CTRLAx.DONE bit in the DMAC memory map. Instead, poll the LLI.DMAC_CTRLAx.DONE bit in the LLI for that buffer. If the poll LLI.DMAC_CTRLAx.DONE bit is asserted, then this buffer transfer has completed. This LLI.DMAC_CTRLAx.DONE bit was cleared at the start of the transfer.

18. The DMAC does not wait for the buffer interrupt to be cleared, but continues and fetches the next LLI from the memory location pointed to by current DMAC_DSCRx register and automatically reprograms the DMAC_SADDRx, DMAC_CTRLAx, DMAC_CTRLBx and DMAC_DSCRx channel registers. The

DMAC_DADDRx register is left unchanged. The DMAC transfer continues until the DMAC samples the DMAC_CTRLAx, DMAC_CTRLBx and DMAC_DSCRx registers at the end of a buffer transfer match that described in Row 1 of Table 41-2 on page 942. The DMAC then knows that the previous buffer transferred was the last buffer in the DMAC transfer.

The DMAC transfer might look like that shown in Figure 41-15 on page 959 Note that the destination address is decrementing.

Figure 41-15. DMAC Transfer with Linked List Source Address and Contiguous Destination Address

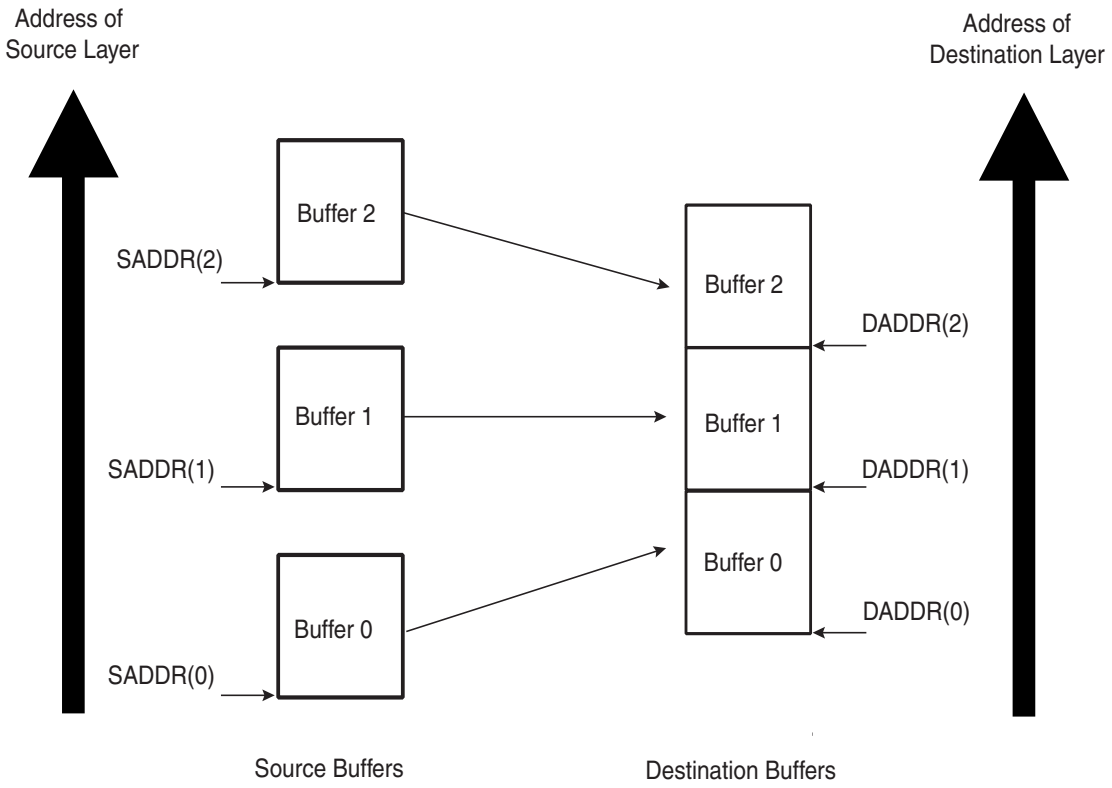

The DMAC transfer flow is shown in Figure 41-16 on page 960.

Figure 41-16. DMAC Transfer Flow for Linked List Source Address and Contiguous Destination Address

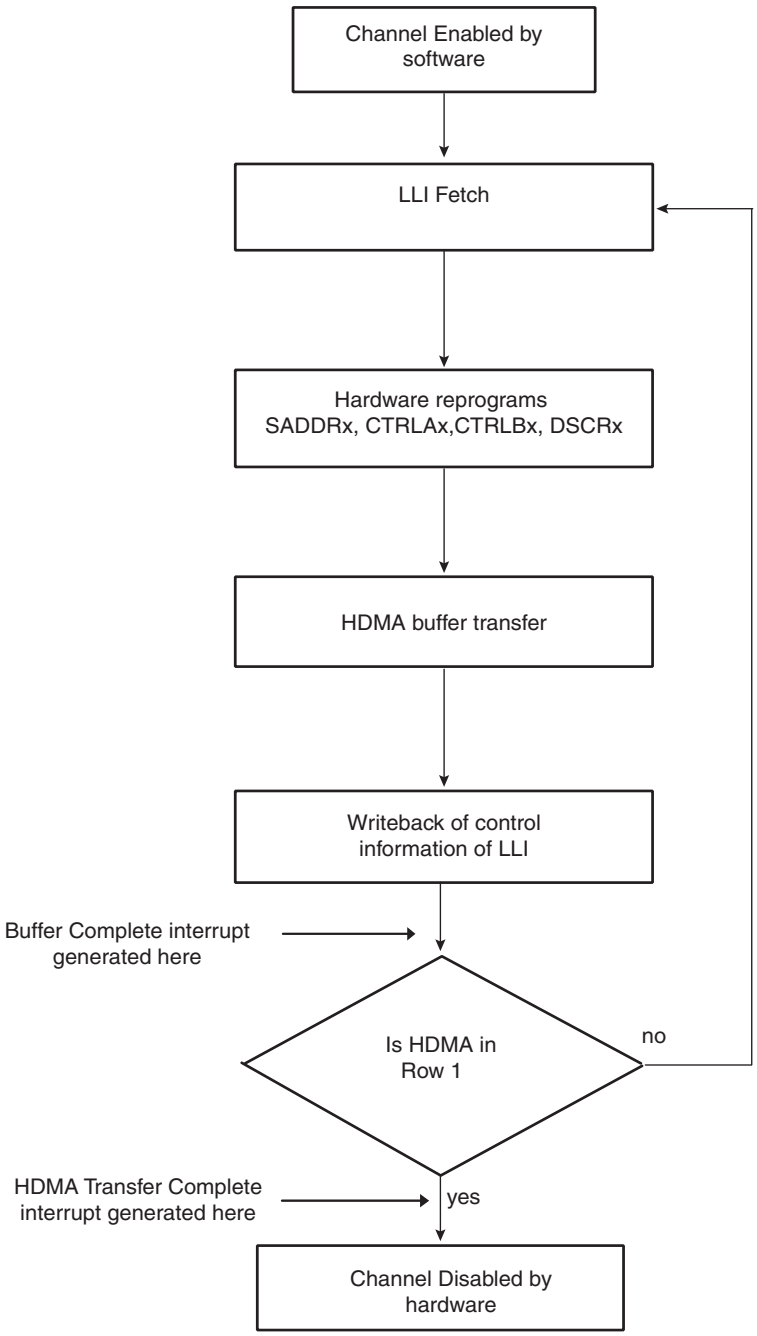

41.4.6 Disabling a Channel Prior to Transfer Completion

Under normal operation, software enables a channel by writing a ‘1’ to the Channel Handler Enable Register, DMAC_CHER.ENABLE[n], and hardware disables a channel on transfer completion by clearing the DMAC_CHSR.ENABLE[n] register bit.

The recommended way for software to disable a channel without losing data is to use the SUSPEND[n] bit in conjunction with the EMPTY[n] bit in the Channel Handler Status Register.

1. If software wishes to disable a channel n prior to the DMAC transfer completion, then it can set the DMAC_CHER.SUSPEND[n] bit to tell the DMAC to halt all transfers from the source peripheral. Therefore, the channel FIFO receives no new data.
2. Software can now poll the DMAC_CHSR.EMPTY[n] bit until it indicates that the channel n FIFO is empty, where n is the channel number.
3. The DMAC_CHER.ENABLE[n] bit can then be cleared by software once the channel n FIFO is empty, where n is the channel number.

When DMAC_CTRLAx.SRC_WIDTH is less than DMAC_CTRLAx.DST_WIDTH and the DMAC_CHSRx.SUSPEND[n] bit is high, the DMAC_CHSRx.EMPTY[n] is asserted once the contents of the FIFO do not permit a single word of DMAC_CTRLAx.DST_WIDTH to be formed. However, there may still be data in the channel FIFO but not enough to form a single transfer of DMAC_CTLx.DST_WIDTH width. In this configuration, once the channel is disabled, the remaining data in the channel FIFO are not transferred to the destination peripheral. It is permitted to remove the channel from the suspension state by writing a '1' to the DMAC_CHER.RESUME[n] field register. The DMAC transfer completes in the normal manner. n defines the channel number.

Note: If a channel is disabled by software, an active single or chunk transaction is not guaranteed to receive an acknowledgement.

41.4.6.1 Abnormal Transfer Termination

A DMAC transfer may be terminated abruptly by software by clearing the channel enable bit, DMAC_CHDR.ENABLE[n] where n is the channel number. This does not mean that the channel is disabled immediately after the DMAC_CHSR.ENABLE[n] bit is cleared over the APB interface. Consider this as a request to disable the channel. The DMAC_CHSR.ENABLE[n] must be polled and then it must be confirmed that the channel is disabled by reading back 0.

Software may terminate all channels abruptly by clearing the global enable bit in the DMAC Configuration Register (DMAC_EN.ENABLE bit). Again, this does not mean that all channels are disabled immediately after the DMAC_EN.ENABLE is cleared over the APB slave interface. Consider this as a request to disable all channels. The DMAC_CHSR.ENABLE must be polled and then it must be confirmed that all channels are disabled by reading back '0'.

Note: If the channel enable bit is cleared while there is data in the channel FIFO, this data is not sent to the destination peripheral and is not present when the channel is re-enabled. For read sensitive source peripherals, such as a source FIFO, this data is therefore lost. When the source is not a read sensitive device (i.e., memory), disabling a channel without waiting for the channel FIFO to empty may be acceptable as the data is available from the source peripheral upon request and is not lost.

Note: If a channel is disabled by software, an active single or chunk transaction is not guaranteed to receive an acknowledgement.

41.5 DMAC Software Requirements

- There must not be any write operation to Channel registers in an active channel after the channel enable is made HIGH. If any channel parameters must be reprogrammed, this can only be done after disabling the DMAC channel.
- When destination peripheral is defined as the flow controller, source single transfer request are not serviced until Destination Peripheral has asserted its Last Transfer Flag.
- When Source Peripheral is flow controller, destination single transfer request are not serviced until Source Peripheral has asserted its Last Transfer Flag.
- When destination peripheral is defined as the flow controller, if the destination width is smaller than the source width, then a data loss may occur, and the loss is equal to Source Single Transfer size in bytes- destination Single Transfer size in bytes.
- When a Memory to Peripheral transfer occurs if the destination peripheral is flow controller, then a prefetch operation is performed. It means that data are extracted from memory before any request from the peripheral is generated.
- You must program the DMAC_SADDRx and DMAC_DADDRx channel registers with a byte, half-word and word aligned address depending on the source width and destination width.
- After the software disables a channel by writing into the channel disable register, it must re-enable the channel only after it has polled a 0 in the corresponding channel enable status register. This is because the current AHB Burst must terminate properly.
- If you program the BTSIZE field in the DMAC_CTRLA, as zero, and the DMAC is defined as the flow controller, then the channel is automatically disabled.
- When hardware handshaking interface protocol is fully implemented, a peripheral is expected to deassert any sreq or breq signals on receiving the ack signal irrespective of the request the ack was asserted in response to.
- Multiple Transfers involving the same peripheral must not be programmed and enabled on different channel, unless this peripheral integrates several hardware handshaking interface.
- When a Peripheral is flow controller, the targeted DMAC Channel must be enabled before the Peripheral. If you do not ensure this the DMAC Channel might miss a Last Transfer Flag, if the First DMAC request is also the last transfer.
- When AUTO Field is set to TRUE, then the BTSIZE Field is automatically reloaded from its previous value. BTSIZE must be initialized to a non zero value if the first transfer is initiated with AUTO field set to TRUE even if LLI mode is enabled because the LLI fetch operation will not update this field.

41.6 DMA Controller (DMAC) User Interface

Table 41-3. Register Mapping

Offset	Register	Name	Access	Reset
0x000	DMAC Global Configuration Register	DMAC_GCFG	Read-write	0x10
0x004	DMAC Enable Register	DMAC_EN	Read-write	0x0
0x008	DMAC Software Single Request Register	DMAC_SREQ	Read-write	0x0
0x00C	DMAC Software Chunk Transfer Request Register	DMAC_CREQ	Read-write	0x0
0x010	DMAC Software Last Transfer Flag Register	DMAC_LAST	Read-write	0x0
0x014	Reserved	–	–	–
0x018	DMAC Error, Chained Buffer transfer completed and Buffer transfer completed Interrupt Enable register.	DMAC_EBCIER	Write-only	–
0x01C	DMAC Error, Chained Buffer transfer completed and Buffer transfer completed Interrupt Disable register.	DMAC_EBCIDR	Write-only	–
0x020	DMAC Error, Chained Buffer transfer completed and Buffer transfer completed Mask Register.	DMAC_EBCIMR	Read-only	0x0
0x024	DMAC Error, Chained Buffer transfer completed and Buffer transfer completed Status Register.	DMAC_EBCISR	Read-only	0x0
0x028	DMAC Channel Handler Enable Register	DMAC_CHER	Write-only	–
0x02C	DMAC Channel Handler Disable Register	DMAC_CHDR	Write-only	–
0x030	DMAC Channel Handler Status Register	DMAC_CHSR	Read-only	0x00FF0000
0x034	Reserved	–	–	–
0x038	Reserved	–	–	–
0x03C+ch_num*(0x28)+(0x0)	DMAC Channel Source Address Register	DMAC_SADDR	Read-write	0x0
0x03C+ch_num*(0x28)+(0x4)	DMAC Channel Destination Address Register	DMAC_DADDR	Read-write	0x0
0x03C+ch_num*(0x28)+(0x8)	DMAC Channel Descriptor Address Register	DMAC_DSCR	Read-write	0x0
0x03C+ch_num*(0x28)+(0xC)	DMAC Channel Control A Register	DMAC_CTRLA	Read-write	0x0
0x03C+ch_num*(0x28)+(0x10)	DMAC Channel Control B Register	DMAC_CTRLB	Read-write	0x0
0x03C+ch_num*(0x28)+(0x14)	DMAC Channel Configuration Register	DMAC_CFG	Read-write	0x01000000
0x03C+ch_num*(0x28)+(0x18)	DMAC Channel Source Picture in Picture Configuration Register	DMAC_SPIP	Read-write	0x0
0x03C+ch_num*(0x28)+(0x1C)	DMAC Channel Destination Picture in Picture Configuration Register	DMAC_DPIP	Read-write	0x0
0x03C+ch_num*(0x28)+(0x20)	Reserved	–	–	–
0x03C+ch_num*(0x28)+(0x24)	Reserved	–	–	–
0x064 - 0x140	DMAC Channel 1 to 7 Register[(1)]		Read-write	0x0
0x017C- 0x1FC	Reserved	–	–	–

Note: 1. The addresses for the DMAC registers shown here are for DMA Channel 0. This sequence of registers is repeated successively for each DMA channel located between 0x064 and 0x140.

41.6.1 DMAC Global Configuration Register

Name: DMAC_GCFG

Address: 0xFFFFEC00

Access: Read-write

Reset: 0x00000010

31	30	29	28	27	26	25	24
–	–	–	–	–	–	–	–

23	22	21	20	19	18	17	16
–	–	–	–	–	–	–	–

15	14	13	12	11	10	9	8
–	–	–	–	–	–	–	–

7	6	5	4	3	2	1	0
–	–	–	ARB_CFG	–	–	–	–

Note: Bit fields 0, 1, 2, 3, have a default value of 0. This should not be changed.

- **ARB_CFG**

0: Fixed priority arbiter.

1: Modified round robin arbiter.

41.6.2 DMAC Enable Register

Name: DMAC_EN

Address: 0xFFFFEC04

Access: Read-write

Reset: 0x00000000

31	30	29	28	27	26	25	24
–	–	–	–	–	–	–	–

23	22	21	20	19	18	17	16
–	–	–	–	–	–	–	–

15	14	13	12	11	10	9	8
–	–	–	–	–	–	–	–

7	6	5	4	3	2	1	0
–	–	–	–	–	–	–	ENABLE

- **ENABLE**

0: DMA Controller is disabled.

1: DMA Controller is enabled.

41.6.3 DMAC Software Single Request Register

Name: DMAC_SREQ

Address: 0xFFFFEC08

Access: Read-write

Reset: 0x00000000

31	30	29	28	27	26	25	24
–	–	–	–	–	–	–	–

23	22	21	20	19	18	17	16
–	–	–	–	–	–	–	–

15	14	13	12	11	10	9	8
DSREQ7	SSREQ7	DSREQ6	SSREQ6	DSREQ5	SSREQ5	DSREQ4	SSREQ4

7	6	5	4	3	2	1	0
DSREQ3	SSREQ3	DSREQ2	SSREQ2	DSREQ1	SSREQ1	DSREQ0	SSREQ0

- **DSREQx**

Request a destination single transfer on channel i.

- **SSREQx**

Request a source single transfer on channel i.

41.6.4 DMAC Software Chunk Transfer Request Register

Name: DMAC_CREQ

Address: 0xFFFFEC0C

Access: Read-write

Reset: 0x00000000

31	30	29	28	27	26	25	24
–	–	–	–	–	–	–	–

23	22	21	20	19	18	17	16
–	–	–	–	–	–	–	–

15	14	13	12	11	10	9	8
DCREQ7	SCREQ7	DCREQ6	SCREQ6	DCREQ5	SCREQ5	DCREQ4	SCREQ4

7	6	5	4	3	2	1	0
DCREQ3	SCREQ3	DCREQ2	SCREQ2	DCREQ1	SCREQ1	DCREQ0	SCREQ0

- **DCREQx**

Request a destination chunk transfer on channel i.

- **SCREQx**

Request a source chunk transfer on channel i.

41.6.5 DMAC Software Last Transfer Flag Register

Name: DMAC_LAST

Address: 0xFFFFEC10

Access: Read-write

Reset: 0x00000000

31	30	29	28	27	26	25	24
–	–	–	–	–	–	–	–

23	22	21	20	19	18	17	16
–	–	–	–	–	–	–	–

15	14	13	12	11	10	9	8
DLAST7	SLAST7	DLAST6	SLAST6	DLAST5	SLAST5	DLAST4	SLAST4

7	6	5	4	3	2	1	0
DLAST3	SLAST3	DLAST2	SLAST2	DLAST1	SLAST1	DLAST0	SLAST0

- **DLASTx**

Writing one to DLASTx prior to writing one to DSREQx or DCREQx indicates that this destination request is the last transfer of the buffer.

- **SLASTx**

Writing one to SLASTx prior to writing one to SSREQx or SCREQx indicates that this source request is the last transfer of the buffer.

41.6.6 DMAC Error, Buffer Transfer and Chained Buffer Transfer Interrupt Enable Register

Name: DMAC_EBCIER

Address: 0xFFFFEC18

Access: Write-only

Reset: 0x00000000

31	30	29	28	27	26	25	24
–	–	–	–	–	–	–	–

23	22	21	20	19	18	17	16
ERR7	ERR6	ERR5	ERR4	ERR3	ERR2	ERR1	ERR0

15	14	13	12	11	10	9	8
CBTC7	CBTC6	CBTC5	CBTC4	CBTC3	CBTC2	CBTC1	CBTC0

7	6	5	4	3	2	1	0
BTC7	BTC6	BTC5	BTC4	BTC3	BTC2	BTC1	BTC0

- **BTC[7:0]**

Buffer Transfer Completed Interrupt Enable Register. Set the relevant bit in the BTC field to enable the interrupt for channel i.

- **CBTC[7:0]**

Chained Buffer Transfer Completed Interrupt Enable Register. Set the relevant bit in the CBTC field to enable the interrupt for channel i.

- **ERR[7:0]**

Access Error Interrupt Enable Register. Set the relevant bit in the ERR field to enable the interrupt for channel i.

41.6.7 DMAC Error, Buffer Transfer and Chained Buffer Transfer Interrupt Disable Register

Name: DMAC_EBCIDR

Address: 0xFFFFEC1C

Access: Write-only

Reset: 0x00000000

31	30	29	28	27	26	25	24
–	–	–	–	–	–	–	–

23	22	21	20	19	18	17	16
ERR7	ERR6	ERR5	ERR4	ERR3	ERR2	ERR1	ERR0

15	14	13	12	11	10	9	8
CBTC7	CBTC6	CBTC5	CBTC4	CBTC3	CBTC2	CBTC1	CBTC0

7	6	5	4	3	2	1	0
BTC7	BTC6	BTC5	BTC4	BTC3	BTC2	BTC1	BTC0

- **BTC[7:0]**

Buffer transfer completed Disable Interrupt Register. When set, a bit of the BTC field disables the interrupt from the relevant DMAC channel.

- **CBTC[7:0]**

Chained Buffer transfer completed Disable Register. When set, a bit of the CBTC field disables the interrupt from the relevant DMAC channel.

- **ERR[7:0]**

Access Error Interrupt Disable Register. When set, a bit of the ERR field disables the interrupt from the relevant DMAC channel.

41.6.8 DMAC Error, Buffer Transfer and Chained Buffer Transfer Interrupt Mask Register

Name: DMAC_EBCIMR

Address: 0xFFFFEC20

Access: Read-only

Reset: 0x00000000

31	30	29	28	27	26	25	24
–	–	–	–	–	–	–	–

23	22	21	20	19	18	17	16
ERR7	ERR6	ERR5	ERR4	ERR3	ERR2	ERR1	ERR0

15	14	13	12	11	10	9	8
CBTC7	CBTC6	CBTC5	CBTC4	CBTC3	CBTC2	CBTC1	CBTC0

7	6	5	4	3	2	1	0
BTC7	BTC6	BTC5	BTC4	BTC3	BTC2	BTC1	BTC0

- **BTC[7:0]**

0: Buffer Transfer completed interrupt is disabled for channel i.

1: Buffer Transfer completed interrupt is enabled for channel i.

- **CBTC[7:0]**

0: Chained Buffer Transfer interrupt is disabled for channel i.

1: Chained Buffer Transfer interrupt is enabled for channel i.

- **ERR[7:0]**

0: Transfer Error Interrupt is disabled for channel i.

1: Transfer Error Interrupt is enabled for channel i.

41.6.9 DMAC Error, Buffer Transfer and Chained Buffer Transfer Status Register

Name: DMAC_EBCISR

Address: 0xFFFFEC24

Access: Read-only

Reset: 0x00000000

31	30	29	28	27	26	25	24
–	–	–	–	–	–	–	–

23	22	21	20	19	18	17	16
ERR7	ERR6	ERR5	ERR4	ERR3	ERR2	ERR1	ERR0

15	14	13	12	11	10	9	8
CBTC7	CBTC6	CBTC5	CBTC4	CBTC3	CBTC2	CBTC1	CBTC0

7	6	5	4	3	2	1	0
BTC7	BTC6	BTC5	BTC4	BTC3	BTC2	BTC1	BTC0

- **BTC[7:0]**

When BTC[*i*] is set, Channel *i* buffer transfer has terminated.

- **CBTC[7:0]**

When CBTC[*i*] is set, Channel *i* Chained buffer has terminated. LLI Fetch operation is disabled.

- **ERR[7:0]**

When ERR[*i*] is set, Channel *i* has detected an AHB Read or Write Error Access.

41.6.10 DMAC Channel Handler Enable Register

Name: DMAC_CHER

Address: 0xFFFFEC28

Access: Write-only

Reset: 0x00000000

31	30	29	28	27	26	25	24
KEEP7	KEEP6	KEEP5	KEEP4	KEEP3	KEEP2	KEEP1	KEEP0
23	22	21	20	19	18	17	16
–	–	–	–	–	–	–	–
15	14	13	12	11	10	9	8
SUSP7	SUSP6	SUSP5	SUSP4	SUSP3	SUSP2	SUSP1	SUSP0
7	6	5	4	3	2	1	0
ENA7	ENA6	ENA5	ENA4	ENA3	ENA2	ENA1	ENA0

- **ENA[7:0]**

When set, a bit of the ENA field enables the relevant channel.

- **SUSP[7:0]**

When set, a bit of the SUSPfield freezes the relevant channel and its current context.

- **KEEP[7:0]**

When set, a bit of the KEEP field resumes the current channel from an automatic stall state.

41.6.11 DMAC Channel Handler Disable Register

Name: DMAC_CHDR

Address: 0xFFFFEC2C

Access: Write-only

Reset: 0x00000000

31	30	29	28	27	26	25	24
–	–	–	–	–	–	–	–

23	22	21	20	19	18	17	16
–	–	–	–	–	–	–	–

15	14	13	12	11	10	9	8
RES7	RES6	RES5	RES4	RES3	RES2	RES1	RES0

7	6	5	4	3	2	1	0
DIS7	DIS6	DIS5	DIS4	DIS3	DIS2	DIS1	DIS0

- **DIS[7:0]**

Write one to this field to disable the relevant DMAC Channel. The content of the FIFO is lost and the current AHB access is terminated. Software must poll DIS[7:0] field in the DMAC_CHSR register to be sure that the channel is disabled.

- **RES[7:0]**

Write one to this field to resume the channel transfer restoring its context.

41.6.12 DMAC Channel Handler Status Register

Name: DMAC_CHSR

Address: 0xFFFFEC30

Access: Read-only

Reset: 0x00FF0000

31	30	29	28	27	26	25	24
STAL7	STAL6	STAL5	STAL4	STAL3	STAL2	STAL1	STAL0

23	22	21	20	19	18	17	16
EMPT7	EMPT6	EMPT5	EMPT4	EMPT3	EMPT2	EMPT1	EMPT0

15	14	13	12	11	10	9	8
SUSP7	SUSP6	SUSP5	SUSP4	SUSP3	SUSP2	SUSP1	SUSP0

7	6	5	4	3	2	1	0
ENA7	ENA6	ENA5	ENA4	ENA3	ENA2	ENA1	ENA0

- **ENA[7:0]**

A one in any position of this field indicates that the relevant channel is enabled.

- **SUSP[7:0]**

A one in any position of this field indicates that the channel transfer is suspended.

- **EMPT[7:0]**

A one in any position of this field indicates that the relevant channel is empty.

- **STAL[7:0]**

A one in any position of this field indicates that the relevant channel is stalling.

41.6.13 DMAC Channel x [x = 0..7] Source Address Register

Name: DMAC_SADDRx [x = 0..7]

Addresses: 0xFFFFEC3C [0], 0xFFFFEC64 [1], 0xFFFFEC8C [2], 0xFFFFECB4 [3], 0xFFFFECDC [4], 0xFFFFED04 [5], 0xFFFFED2C [6], 0xFFFFED54 [7]

Access: Read-write

Reset: 0x00000000

31	30	29	28	27	26	25	24
SADDRx							

23	22	21	20	19	18	17	16
SADDRx							

15	14	13	12	11	10	9	8
SADDRx							

7	6	5	4	3	2	1	0
SADDRx							

- **SADDRx**

Channel x source address. This register must be aligned with the source transfer width.

41.6.14 DMAC Channel x [x = 0..7] Destination Address Register

Name: DMAC_DADDRx [x = 0..7]

Addresses: 0xFFFFEC40 [0], 0xFFFFEC68 [1], 0xFFFFEC90 [2], 0xFFFFECB8 [3], 0xFFFFECE0 [4], 0xFFFFED08 [5], 0xFFFFED30 [6], 0xFFFFED58 [7]

Access: Read-write

Reset: 0x00000000

31	30	29	28	27	26	25	24
DADDRx							

23	22	21	20	19	18	17	16
DADDRx							

15	14	13	12	11	10	9	8
DADDRx							

7	6	5	4	3	2	1	0
DADDRx							

- **DADDRx**

Channel x destination address. This register must be aligned with the destination transfer width.

41.6.15 DMAC Channel x [x = 0..7] Descriptor Address Register

Name: DMAC_DSCRx [x = 0..7]

Addresses: 0xFFFFEC44 [0], 0xFFFFEC6C [1], 0xFFFFEC94 [2], 0xFFFFECBC [3], 0xFFFFECE4 [4], 0xFFFFED0[5] 0xFFFFED34 [6], 0xFFFFED5C [7]

Access: Read-write

Reset: 0x00000000

31	30	29	28	27	26	25	24
DSCRx							

23	22	21	20	19	18	17	16
DSCRx							

15	14	13	12	11	10	9	8
DSCRx							

7	6	5	4	3	2	1	0
DSCRx						DSCRx_IF	

- **DSCRx_IF**

00: The Buffer Transfer descriptor is fetched via AHB-Lite Interface 0.

01: The Buffer Transfer descriptor is fetched via AHB-Lite Interface 1.

10: Reserved.

11: Reserved.

- **DSCRx**

Buffer Transfer descriptor address. This address is word aligned.

41.6.16 DMAC Channel x [x = 0..7] Control A Register

Name: DMAC_CTRLAx [x = 0..7]

Addresses: 0xFFFFEC48 [0], 0xFFFFEC70 [1], 0xFFFFEC98 [2], 0xFFFFECC0 [3], 0xFFFFECE8 [4], 0xFFFFED10 [5], 0xFFFFED38 [6], 0xFFFFED60 [7]

Access: Read-write

Reset: 0x00000000

31	30	29	28	27	26	25	24
DONE	–	DST_WIDTH		–	–	SRC_WIDTH	

23	22	21	20	19	18	17	16
–	DCSIZE			–	SCSIZE		

15	14	13	12	11	10	9	8
BTSIZE							

7	6	5	4	3	2	1	0
BTSIZE							

- **BTSIZE**

Buffer Transfer Size. The transfer size relates to the number of transfers to be performed, that is, for writes it refers to the number of source width transfers to perform when DMAC is flow controller. For Reads, BTSIZE refers to the number of transfers completed on the Source Interface. When this field is set to 0, the DMAC module is automatically disabled when the relevant channel is enabled.

- **SCSIZE**

Source Chunk Transfer Size.

SCSIZE value	Number of data transferred
000	1
001	4
010	8
011	16
100	32
101	64
110	128
111	256

- **DCSIZE**

Destination Chunk Transfer size.

DCSIZE	Number of data transferred
000	1
001	4
010	8
011	16

DCSIZE	Number of data transferred
100	32
101	64
110	128
111	256

- **SRC_WIDTH**

SRC_WIDTH	Single Transfer Size
00	BYTE
01	HALF-WORD
1X	WORD

- **DST_WIDTH**

DST_WIDTH	Single Transfer Size
00	BYTE
01	HALF-WORD
1X	WORD

- **DONE**

0: The transfer is performed.

1: If SOD field of DMAC_CFG register is set to true, then the DMAC is automatically disabled when an LLI updates the content of this register.

The DONE field is written back to memory at the end of the transfer.

41.6.17 DMAC Channel x [x = 0..7] Control B Register

Name: DMAC_CTRLBx [x = 0..7]

Addresses: 0xFFFFEC4C [0], 0xFFFFEC74 [1], 0xFFFFEC9C [2], 0xFFFFECC4 [3], 0xFFFFECEC [4], 0xFFFFED14 [5], 0xFFFFED3C [6], 0xFFFFED64 [7]

Access: Read-write

Reset: 0x00000000

31	30	29	28	27	26	25	24
AUTO	IEN	DST_INCR		–	–	SRC_INCR	

23	22	21	20	19	18	17	16
FC			DST_DSCR	–	–	–	SRC_DSCR

15	14	13	12	11	10	9	8
–	–		DST_PIP	–	–	–	SRC_PIP

7	6	5	4	3	2	1	0
–	–	DIF		–	–	SIF	

- **SIF: Source Interface Selection Field**

00: The source transfer is done via AHB-Lite Interface 0.

01: The source transfer is done via AHB-Lite Interface 1.

10: Reserved.

11: Reserved.

- **DIF: Destination Interface Selection Field**

00: The destination transfer is done via AHB-Lite Interface 0.

01: The destination transfer is done via AHB-Lite Interface 1.

10: Reserved.

11: Reserved.

- **SRC_PIP**

0: Picture-in-Picture mode is disabled. The source data area is contiguous.

1: Picture-in-Picture mode is enabled. When the source PIP counter reaches the programmable boundary, the address is automatically increment of a user defined amount.

- **DST_PIP**

0: Picture-in-Picture mode is disabled. The Destination data area is contiguous.

1: Picture-in-Picture mode is enabled. When the Destination PIP counter reaches the programmable boundary the address is automatically incremented by a user-defined amount.

- **SRC_DSCR**

0: Source address is updated when the descriptor is fetched from the memory.

1: Buffer Descriptor Fetch operation is disabled for the source.

- **DST_DSCR**

0: Destination address is updated when the descriptor is fetched from the memory.

1: Buffer Descriptor Fetch operation is disabled for the destination.

- **FC**

This field defines which device controls the size of the buffer transfer, also referred as to the Flow Controller.

FC	Type of transfer	Flow Controller
000	Memory-to-Memory	DMA Controller
001	Memory-to-Peripheral	DMA Controller
010	Peripheral-to-Memory	DMA Controller
011	Peripheral-to-Peripheral	DMA Controller
100	Peripheral-to-Memory	Peripheral
101	Memory-to-Peripheral	Peripheral
110	Peripheral-to-Peripheral	Source Peripheral
111	Peripheral-to-Peripheral	Destination Peripheral

- **SRC_INCR**

SRC_INCR	Type of addressing mode
00	INCREMENTING
01	DECREMENTING
10	FIXED

- **DST_INCR**

DST_INCR	Type of addressing scheme
00	INCREMENTING
01	DECREMENTING
10	FIXED

- **IEN**

If this bit is cleared, when the buffer transfer is completed, the BTC[x] flag is set in the EBCISR status register. This bit is active low.

- **AUTO**

Automatic multiple buffer transfer is enabled. When set, this bit enables replay mode or contiguous mode when several buffers are transferred.

41.6.18 DMAC Channel x [x = 0..7] Configuration Register

Name: DMAC_CFGx [x = 0..7]

Addresses: 0xFFFFEC50 [0], 0xFFFFEC78 [1], 0xFFFFECA0 [2], 0xFFFFECC8 [3], 0xFFFFECF0 [4], 0xFFFFED18 [5], 0xFFFFED40 [6], 0xFFFFED68 [7]

Access: Read-write

Reset: 0x0100000000

31	30	29	28	27	26	25	24
–	–	FIFOCFG		–	AHB_PROT		

23	22	21	20	19	18	17	16
–	LOCK_IF_L	LOCK_B	LOCK_IF	–	–	–	SOD

15	14	13	12	11	10	9	8
–	–	DST_H2SEL	DST_REP	–	–	SRC_H2SEL	SRC_REP

7	6	5	4	3	2	1	0
DST_PER				SRC_PER			

- **SRC_PER**

Channel x Source Request is associated with peripheral identifier coded SRC_PER handshaking interface.

- **DST_PER**

Channel x Destination Request is associated with peripheral identifier coded DST_PER handshaking interface.

- **SRC_REP**

0: When automatic mode is activated, source address is contiguous between two buffers.

1: When automatic mode is activated, the source address and the control register are reloaded from previous transfer.

- **SRC_H2SEL**

0: Software handshaking interface is used to trigger a transfer request.

1: Hardware handshaking interface is used to trigger a transfer request.

- **DST_REP**

0: When automatic mode is activated, destination address is contiguous between two buffers.

1: When automatic mode is activated, the destination and the control register are reloaded from the previous transfer.

- **DST_H2SEL**

0: Software handshaking interface is used to trigger a transfer request.

1: Hardware handshaking interface is used to trigger a transfer request.

- **SOD**

0: STOP ON DONE disabled, the descriptor fetch operation ignores DONE Field of CTRLA register.

1: STOP ON DONE activated, the DMAC module is automatically disabled if DONE FIELD is set to 1.

- **LOCK_IF**

0: Interface Lock capability is disabled

1: Interface Lock capability is enabled

- **LOCK_B**

0: AHB Bus Locking capability is disabled.

1: AHB Bus Locking capability is enabled.

- **LOCK_IF_L**

0: The Master Interface Arbiter is locked by the channel x for a chunk transfer.

1: The Master Interface Arbiter is locked by the channel x for a buffer transfer.

- **AHB_PROT**

AHB_PROT field provides additional information about a bus access and is primarily used to implement some level of protection.

HPROT[3]	HPROT[2]	HPROT[1]	HPROT[0]	Description
			1	Data access
		AHB_PROT[0]		0: User Access 1: Privileged Access
	AHB_PROT[1]			0: Not Bufferable 1: Bufferable
AHB_PROT[2]				0: Not cacheable 1: Cacheable

- **FIFOCFG**

FIFOCFG	FIFO request
00	The largest defined length AHB burst is performed on the destination AHB interface.
01	When half FIFO size is available/filled, a source/destination request is serviced.
10	When there is enough space/data available to perform a single AHB access, then the request is serviced.

41.6.19 DMAC Channel x [x = 0..7] Source Picture in Picture Configuration Register

Name: DMAC_SPIPx [x = 0..7]

Addresses: 0xFFFFEC54 [0], 0xFFFFEC7C [1], 0xFFFFECA4 [2], 0xFFFFECCC [3], 0xFFFFECF4 [4], 0xFFFFED1C [5], 0xFFFFED44 [6], 0xFFFFED6C [7]

Access: Read-write

Reset: 0x00000000

31	30	29	28	27	26	25	24
–	–	–	–	–	–	SPIP_BOUNDARY	

23	22	21	20	19	18	17	16
SPIP_BOUNDARY							

15	14	13	12	11	10	9	8
SPIP_HOLE							

7	6	5	4	3	2	1	0
SPIP_HOLE							

- **SPIP_HOLE**

This field indicates the value to add to the address when the programmable boundary has been reached.

- **SPIP_BOUNDARY**

This field indicates the number of source transfers to perform before the automatic address increment operation.

41.6.20 DMAC Channel x [x = 0..7] Destination Picture in Picture Configuration Register

Name: DMAC_DPIPx [x = 0..7]

Addresses: 0xFFFFEC58 [0], 0xFFFFEC80 [1], 0xFFFFECA8 [2], 0xFFFFECD0 [3], 0xFFFFECF8 [4], 0xFFFFED20 [5], 0xFFFFED48 [6], 0xFFFFED70 [7]

Access: Read-write

Reset: 0x00000000

31	30	29	28	27	26	25	24
–	–	–	–	–	–	DPIP_BOUNDARY	

23	22	21	20	19	18	17	16
DPIP_BOUNDARY							

15	14	13	12	11	10	9	8
DPIP_HOLE							

7	6	5	4	3	2	1	0
DPIP_HOLE							

- **DPIP_HOLE**

This field indicates the value to add to the address when the programmable boundary has been reached.

- **DPIP_BOUNDARY**

This field indicates the number of source transfers to perform before the automatic address increment operation.

42. Pulse Width Modulation Controller (PWM)

42.1 Description

The PWM macrocell controls several channels independently. Each channel controls one square output waveform. Characteristics of the output waveform such as period, duty-cycle and polarity are configurable through the user interface. Each channel selects and uses one of the clocks provided by the clock generator. The clock generator provides several clocks resulting from the division of the PWM macrocell master clock.

All PWM macrocell accesses are made through APB mapped registers.

Channels can be synchronized, to generate non overlapped waveforms. All channels integrate a double buffering system in order to prevent an unexpected output waveform while modifying the period or the duty-cycle.

42.2 Embedded Characteristics

- Four channels, one 16-bit counter per channel
- Common clock generator, providing Thirteen Different Clocks
  - A Modulo n counter providing eleven clocks
  - Two independent Linear Dividers working on modulo n counter outputs
- Independent channel programming
  - Independent Enable Disable Commands
  - Independent Clock Selection
  - Independent Period and Duty Cycle, with Double Buffering
  - Programmable selection of the output waveform polarity
  - Programmable center or left aligned output waveform

42.3 Block Diagram

Figure 42-1. Pulse Width Modulation Controller Block Diagram

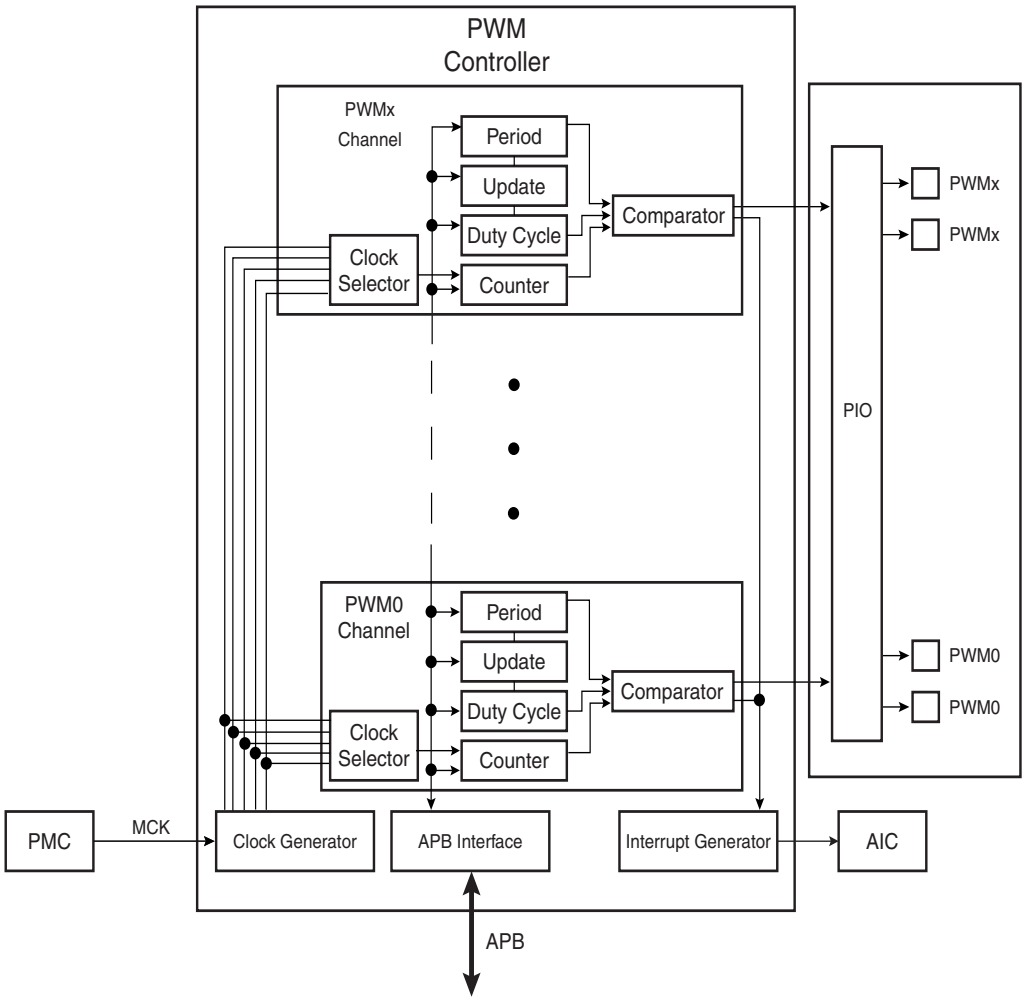

42.4 I/O Lines Description

Each channel outputs one waveform on one external I/O line.

Table 42-1. I/O Line Description

Name	Description	Type
PWMx	PWM Waveform Output for channel x	Output

42.5 Product Dependencies

42.5.1 I/O Lines

The pins used for interfacing the PWM may be multiplexed with PIO lines. The programmer must first program the PIO controller to assign the desired PWM pins to their peripheral function. If I/O lines of the PWM are not used by the application, they can be used for other purposes by the PIO controller.

All of the PWM outputs may or may not be enabled. If an application requires only four channels, then only four PIO lines will be assigned to PWM outputs.

Table 42-2. I/O Lines

Instance	Signal	I/O Line	Peripheral
PWM	PWM0	PD24	B
PWM	PWM1	PD25	B
PWM	PWM1	PD31	B
PWM	PWM2	PD26	B
PWM	PWM2	PE31	A
PWM	PWM3	PA25	B
PWM	PWM3	PD0	B

42.5.2 Power Management

The PWM is not continuously clocked. The programmer must first enable the PWM clock in the Power Management Controller (PMC) before using the PWM. However, if the application does not require PWM operations, the PWM clock can be stopped when not needed and be restarted later. In this case, the PWM will resume its operations where it left off.

Configuring the PWM does not require the PWM clock to be enabled.

42.5.3 Interrupt Sources

The PWM interrupt line is connected on one of the internal sources of the Advanced Interrupt Controller. Using the PWM interrupt requires the AIC to be programmed first. Note that it is not recommended to use the PWM interrupt line in edge sensitive mode.

Table 42-3. Peripheral IDs

Instance	ID
PWM	19

42.6 Functional Description

The PWM macrocell is primarily composed of a clock generator module and 4 channels.

- Clocked by the system clock, MCK, the clock generator module provides 13 clocks.
- Each channel can independently choose one of the clock generator outputs.
- Each channel generates an output waveform with attributes that can be defined independently for each channel through the user interface registers.

42.6.1 PWM Clock Generator

Figure 42-2. Functional View of the Clock Generator Block Diagram

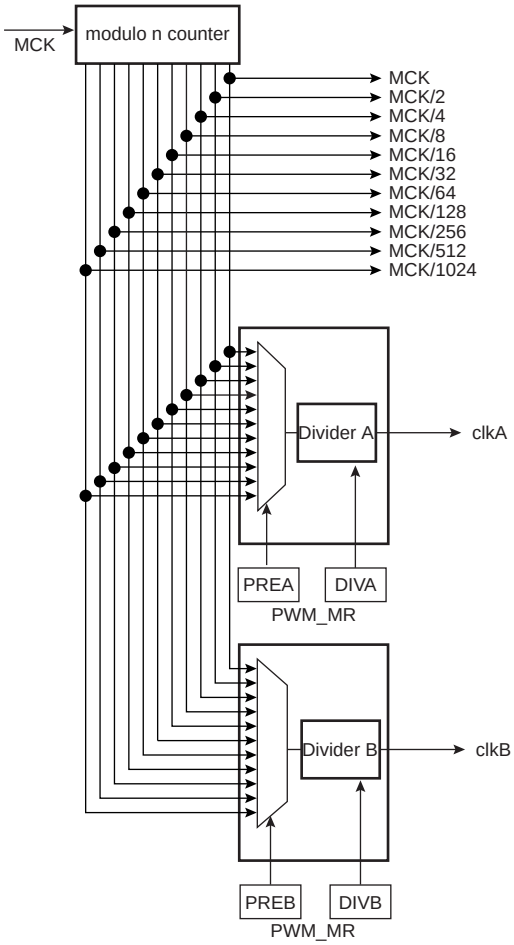

Caution: Before using the PWM macrocell, the programmer must first enable the PWM clock in the Power Management Controller (PMC).

The PWM macrocell master clock, MCK, is divided in the clock generator module to provide different clocks available for all channels. Each channel can independently select one of the divided clocks.

The clock generator is divided in three blocks:

- a modulo n counter which provides 11 clocks: F_{MCK}, $F_{MCK}/2$, $F_{MCK}/4$, $F_{MCK}/8$, $F_{MCK}/16$, $F_{MCK}/32$, $F_{MCK}/64$, $F_{MCK}/128$, $F_{MCK}/256$, $F_{MCK}/512$, $F_{MCK}/1024$
- two linear dividers (1, 1/2, 1/3, ... 1/255) that provide two separate clocks: clkA and clkB

Each linear divider can independently divide one of the clocks of the modulo n counter. The selection of the clock to be divided is made according to the PREA (PREB) field of the PWM Mode register (PWM_MR). The resulting clock clkA (clkB) is the clock selected divided by DIVA (DIVB) field value in the PWM Mode register (PWM_MR).

After a reset of the PWM controller, DIVA (DIVB) and PREA (PREB) in the PWM Mode register are set to 0. This implies that after reset clkA (clkB) are turned off.

At reset, all clocks provided by the modulo n counter are turned off except clock “clk”. This situation is also true when the PWM master clock is turned off through the Power Management Controller.

42.6.2 PWM Channel

42.6.2.1 Block Diagram

Figure 42-3. Functional View of the Channel Block Diagram

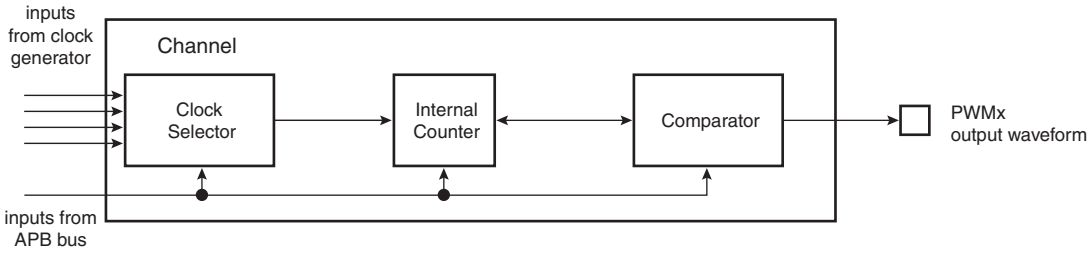

Each of the 4 channels is composed of three blocks:

- A clock selector which selects one of the clocks provided by the clock generator described in Section 42.6.1 “PWM Clock Generator” on page 990.
- An internal counter clocked by the output of the clock selector. This internal counter is incremented or decremented according to the channel configuration and comparators events. The size of the internal counter is 16 bits.
- A comparator used to generate events according to the internal counter value. It also computes the PWMx output waveform according to the configuration.

42.6.2.2 Waveform Properties

The different properties of output waveforms are:

- the ***internal clock selection***. The internal channel counter is clocked by one of the clocks provided by the clock generator described in the previous section. This channel parameter is defined in the CPRE field of the PWM_CMRx register. This field is reset at 0.
- the ***waveform period***. This channel parameter is defined in the CPRD field of the PWM_CPRDx register.
  - If the waveform is left aligned, then the output waveform period depends on the counter source clock and can be calculated:
  By using the Master Clock (MCK) divided by an X given prescaler value
  (with X being 1, 2, 4, 8, 16, 32, 64, 128, 256, 512, or 1024), the resulting period formula will be:

  $$\frac{(X \times CPRD)}{MCK}$$

  By using a Master Clock divided by one of both DIVA or DIVB divider, the formula becomes, respectively:

  $$\frac{(X*CPRD*DIVA)}{MCK} \text{ or } \frac{(X*CPRD*DIVB)}{MCK}$$

  If the waveform is center aligned then the output waveform period depends on the counter source clock and can be calculated:
  By using the Master Clock (MCK) divided by an X given prescaler value
  (with X being 1, 2, 4, 8, 16, 32, 64, 128, 256, 512, or 1024). The resulting period formula will be:

  $$\frac{(2 \times X \times CPRD)}{MCK}$$

  By using a Master Clock divided by one of both DIVA or DIVB divider, the formula becomes, respectively:

$$\frac{(2*X*CPRD*DIVA)}{MCK} \text{ or } \frac{(2*X*CPRD*DIVB)}{MCK}$$

- the ***waveform duty cycle***. This channel parameter is defined in the CDTY field of the PWM_CDTYx register. If the waveform is left aligned then:

$$\text{duty cycle} = \frac{(period - 1/\text{fchannel_x_clock} \times CDTY)}{period}$$

If the waveform is center aligned, then:

$$\text{duty cycle} = \frac{((period/2) - 1/\text{fchannel_x_clock} \times CDTY))}{(period/2)}$$

- the ***waveform polarity.*** At the beginning of the period, the signal can be at high or low level. This property is defined in the CPOL field of the PWM_CMRx register. By default the signal starts by a low level.
- the ***waveform alignment***. The output waveform can be left or center aligned. Center aligned waveforms can be used to generate non overlapped waveforms. This property is defined in the CALG field of the PWM_CMRx register. The default mode is left aligned.

Figure 42-4. Non Overlapped Center Aligned Waveforms

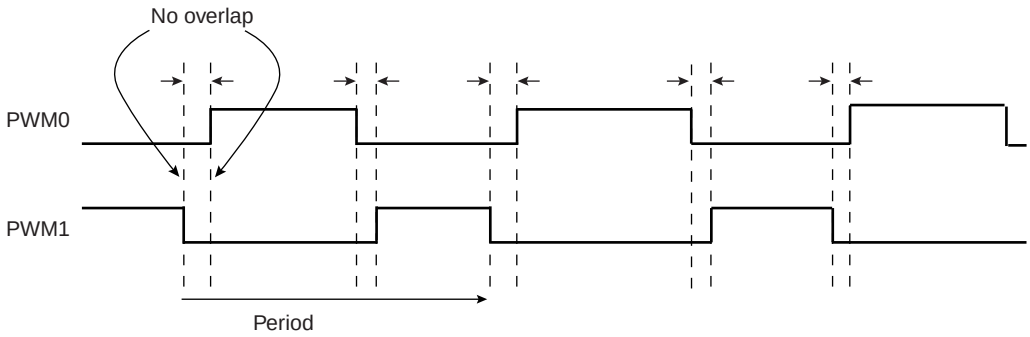

Note: 1. See Figure 42-5 on page 993 for a detailed description of center aligned waveforms.

When center aligned, the internal channel counter increases up to CPRD and.decreases down to 0. This ends the period.

When left aligned, the internal channel counter increases up to CPRD and is reset. This ends the period.

Thus, for the same CPRD value, the period for a center aligned channel is twice the period for a left aligned channel.

Waveforms are fixed at 0 when:

- CDTY = CPRD and CPOL = 0
- CDTY = 0 and CPOL = 1

Waveforms are fixed at 1 (once the channel is enabled) when:

- CDTY = 0 and CPOL = 0
- CDTY = CPRD and CPOL = 1

The waveform polarity must be set before enabling the channel. This immediately affects the channel output level. Changes on channel polarity are not taken into account while the channel is enabled.

Figure 42-5. Waveform Properties

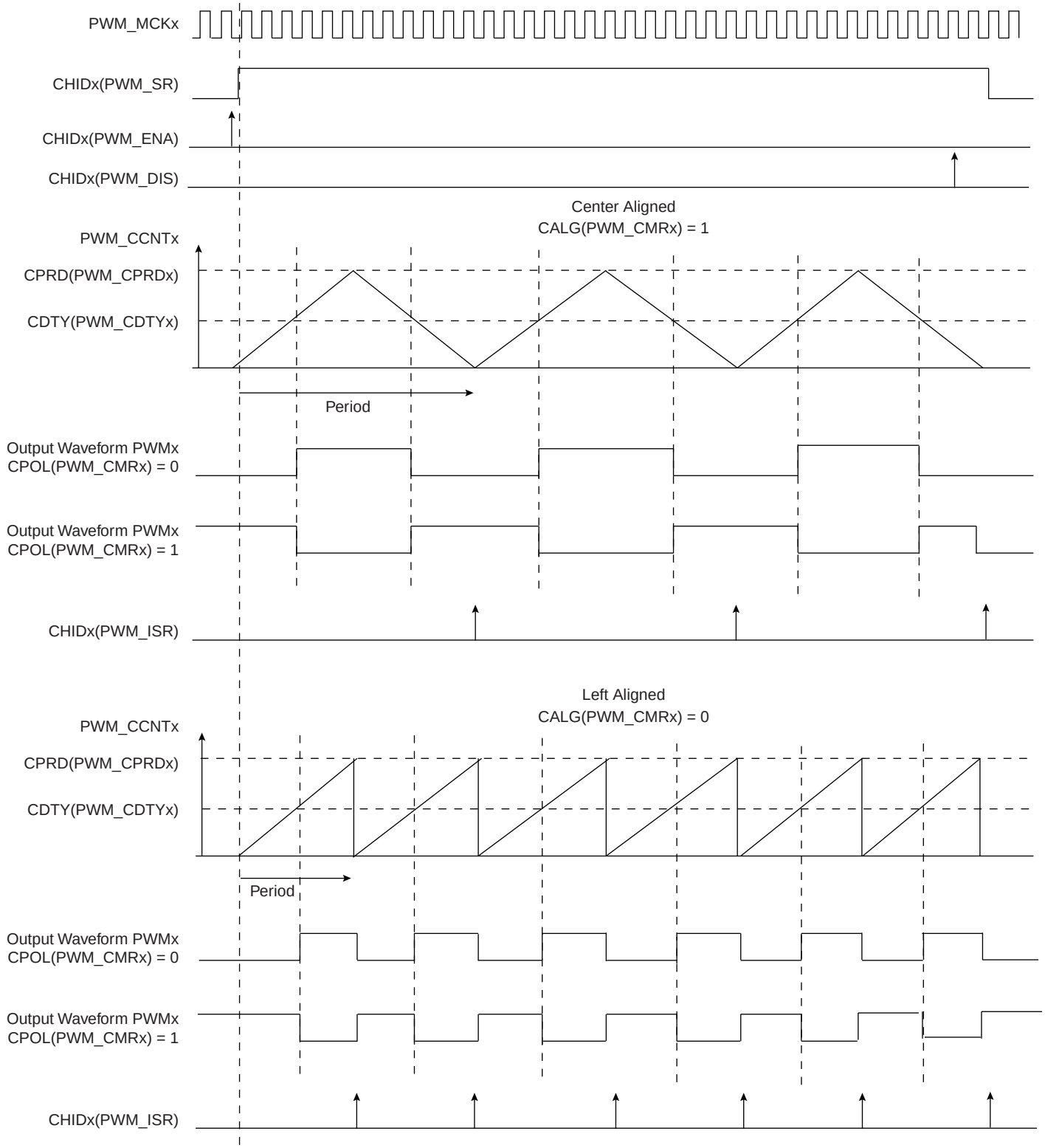

42.6.3 PWM Controller Operations

42.6.3.1 Initialization

Before enabling the output channel, this channel must have been configured by the software application:

- Configuration of the clock generator if DIVA and DIVB are required
- Selection of the clock for each channel (CPRE field in the PWM_CMRx register)
- Configuration of the waveform alignment for each channel (CALG field in the PWM_CMRx register)
- Configuration of the period for each channel (CPRD in the PWM_CPRDx register). Writing in PWM_CPRDx Register is possible while the channel is disabled. After validation of the channel, the user must use PWM_CUPDx Register to update PWM_CPRDx as explained below.
- Configuration of the duty cycle for each channel (CDTY in the PWM_CDTYx register). Writing in PWM_CDTYx Register is possible while the channel is disabled. After validation of the channel, the user must use PWM_CUPDx Register to update PWM_CDTYx as explained below.
- Configuration of the output waveform polarity for each channel (CPOL in the PWM_CMRx register)
- Enable Interrupts (Writing CHIDx in the PWM_IER register)
- Enable the PWM channel (Writing CHIDx in the PWM_ENA register)

It is possible to synchronize different channels by enabling them at the same time by means of writing simultaneously several CHIDx bits in the PWM_ENA register.

- In such a situation, all channels may have the same clock selector configuration and the same period specified.

42.6.3.2 Source Clock Selection Criteria

The large number of source clocks can make selection difficult. The relationship between the value in the Period Register (PWM_CPRDx) and the Duty Cycle Register (PWM_CDTYx) can help the user in choosing. The event number written in the Period Register gives the PWM accuracy. The Duty Cycle quantum cannot be lower than *1/PWM_CPRDx* value. The higher the value of PWM_CPRDx, the greater the PWM accuracy.

For example, if the user sets 15 (in decimal) in PWM_CPRDx, the user is able to set a value between 1 up to 14 in PWM_CDTYx Register. The resulting duty cycle quantum cannot be lower than 1/15 of the PWM period.

42.6.3.3 Changing the Duty Cycle or the Period

It is possible to modulate the output waveform duty cycle or period.

To prevent unexpected output waveform, the user must use the update register (PWM_CUPDx) to change waveform parameters while the channel is still enabled. The user can write a new period value or duty cycle value in the update register (PWM_CUPDx). This register holds the new value until the end of the current cycle and updates the value for the next cycle. Depending on the CPD field in the PWM_CMRx register, PWM_CUPDx either updates PWM_CPRDx or PWM_CDTYx. Note that even if the update register is used, the period must not be smaller than the duty cycle.

Figure 42-6. Synchronized Period or Duty Cycle Update

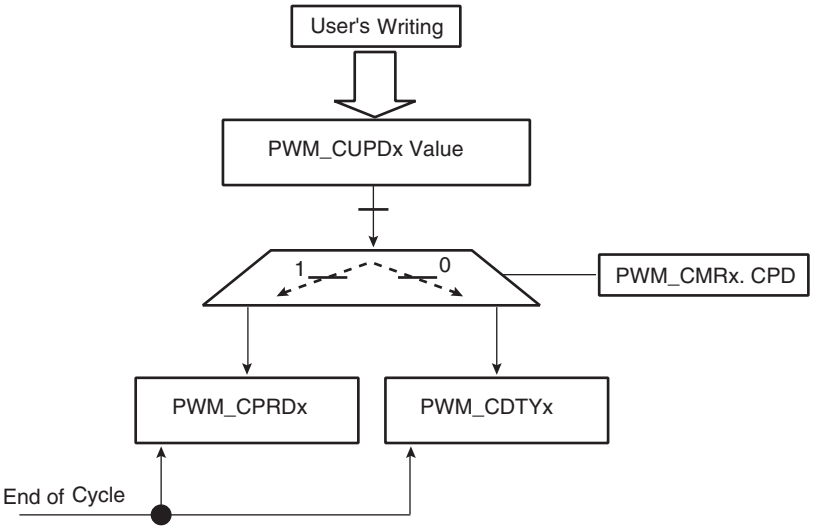

To prevent overwriting the PWM_CUPDx by software, the user can use status events in order to synchronize his software. Two methods are possible. In both, the user must enable the dedicated interrupt in PWM_IER at PWM Controller level.

The first method (polling method) consists of reading the relevant status bit in PWM_ISR Register according to the enabled channel(s). See Figure 42-7.

The second method uses an Interrupt Service Routine associated with the PWM channel.

Note: Reading the PWM_ISR register automatically clears CHIDx flags.

Figure 42-7. Polling Method

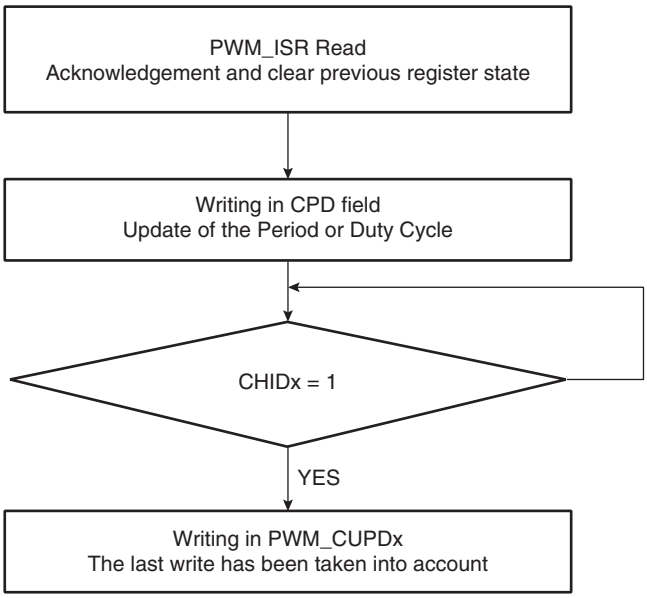

Note: Polarity and alignment can be modified only when the channel is disabled.

42.6.3.4 Interrupts

Depending on the interrupt mask in the PWM_IMR register, an interrupt is generated at the end of the corresponding channel period. The interrupt remains active until a read operation in the PWM_ISR register occurs.

A channel interrupt is enabled by setting the corresponding bit in the PWM_IER register. A channel interrupt is disabled by setting the corresponding bit in the PWM_IDR register.

42.7 Pulse Width Modulation Controller (PWM) User Interface

Table 42-4. Register Mapping[1]

Offset	Register	Name	Access	Reset
0x00	PWM Mode Register	PWM_MR	Read-write	0
0x04	PWM Enable Register	PWM_ENA	Write-only	-
0x08	PWM Disable Register	PWM_DIS	Write-only	-
0x0C	PWM Status Register	PWM_SR	Read-only	0
0x10	PWM Interrupt Enable Register	PWM_IER	Write-only	-
0x14	PWM Interrupt Disable Register	PWM_IDR	Write-only	-
0x18	PWM Interrupt Mask Register	PWM_IMR	Read-only	0
0x1C	PWM Interrupt Status Register	PWM_ISR	Read-only	0
0x20 - 0xFC	Reserved	–	–	–
0x100 - 0x1FC	Reserved			
0x200 + ch_num * 0x20 + 0x00	PWM Channel Mode Register	PWM_CMR	Read-write	0x0
0x200 + ch_num * 0x20 + 0x04	PWM Channel Duty Cycle Register	PWM_CDTY	Read-write	0x0
0x200 + ch_num * 0x20 + 0x08	PWM Channel Period Register	PWM_CPRD	Read-write	0x0
0x200 + ch_num * 0x20 + 0x0C	PWM Channel Counter Register	PWM_CCNT	Read-only	0x0
0x200 + ch_num * 0x20 + 0x10	PWM Channel Update Register	PWM_CUPD	Write-only	-

Note: 1. Some registers are indexed with “ch_num” index ranging from 0 to 3.

42.7.1 PWM Mode Register

Register Name: PWM_MR

Address: 0xFFFB8000

Access Type: Read/Write

31	30	29	28	27	26	25	24
–	–	–	–	PREB			

23	22	21	20	19	18	17	16
DIVB							

15	14	13	12	11	10	9	8
–	–	–	–	PREA			

7	6	5	4	3	2	1	0
DIVA							

- **DIVA, DIVB: CLKA, CLKB Divide Factor**

DIVA, DIVB	CLKA, CLKB
0	CLKA, CLKB clock is turned off
1	CLKA, CLKB clock is clock selected by PREA, PREB
2-255	CLKA, CLKB clock is clock selected by PREA, PREB divided by DIVA, DIVB factor.

- **PREA, PREB**

PREA, PREB				Divider Input Clock
0	0	0	0	MCK.
0	0	0	1	MCK/2
0	0	1	0	MCK/4
0	0	1	1	MCK/8
0	1	0	0	MCK/16
0	1	0	1	MCK/32
0	1	1	0	MCK/64
0	1	1	1	MCK/128
1	0	0	0	MCK/256
1	0	0	1	MCK/512
1	0	1	0	MCK/1024
Other				Reserved

42.7.2 PWM Enable Register

Register Name: PWM_ENA

Address: 0xFFFB8004

Access Type: Write-only

31	30	29	28	27	26	25	24
–	–	–	–	–	–	–	–

23	22	21	20	19	18	17	16
–	–	–	–	–	–	–	–

15	14	13	12	11	10	9	8
–	–	–	–	–	–	–	–

7	6	5	4	3	2	1	0
–	–	–	–	CHID3	CHID2	CHID1	CHID0

- **CHIDx: Channel ID**

0 = No effect.

1 = Enable PWM output for channel x.

42.7.3 PWM Disable Register

Register Name: PWM_DIS

Address: 0xFFFB8008

Access Type: Write-only

31	30	29	28	27	26	25	24
–	–	–	–	–	–	–	–

23	22	21	20	19	18	17	16
–	–	–	–	–	–	–	–

15	14	13	12	11	10	9	8
–	–	–	–	–	–	–	–

7	6	5	4	3	2	1	0
–	–	–	–	CHID3	CHID2	CHID1	CHID0

- **CHIDx: Channel ID**

0 = No effect.

1 = Disable PWM output for channel x.

42.7.4 PWM Status Register

Register Name: PWM_SR

Address: 0xFFFB800C

Access Type: Read-only

31	30	29	28	27	26	25	24
–	–	–	–	–	–	–	–

23	22	21	20	19	18	17	16
–	–	–	–	–	–	–	–

15	14	13	12	11	10	9	8
–	–	–	–	–	–	–	–

7	6	5	4	3	2	1	0
–	–	–	–	CHID3	CHID2	CHID1	CHID0

- **CHIDx: Channel ID**

0 = PWM output for channel x is disabled.

1 = PWM output for channel x is enabled.

42.7.5 PWM Interrupt Enable Register

Register Name: PWM_IER

Address: 0xFFFB8010

Access Type: Write-only

31	30	29	28	27	26	25	24
–	–	–	–	–	–	–	–

23	22	21	20	19	18	17	16
–	–	–	–	–	–	–	–

15	14	13	12	11	10	9	8
–	–	–	–	–	–	–	–

7	6	5	4	3	2	1	0
–	–	–	–	CHID3	CHID2	CHID1	CHID0

- **CHIDx: Channel ID.**

0 = No effect.

1 = Enable interrupt for PWM channel x.

42.7.6 PWM Interrupt Disable Register

Register Name: PWM_IDR

Address: 0xFFFB8014

Access Type: Write-only

31	30	29	28	27	26	25	24
–	–	–	–	–	–	–	–

23	22	21	20	19	18	17	16
–	–	–	–	–	–	–	–

15	14	13	12	11	10	9	8
–	–	–	–	–	–	–	–

7	6	5	4	3	2	1	0
–	–	–	–	CHID3	CHID2	CHID1	CHID0

- **CHIDx: Channel ID.**

0 = No effect.

1 = Disable interrupt for PWM channel x.

42.7.7 PWM Interrupt Mask Register

Register Name: PWM_IMR

Address: 0xFFFB8018

Access Type: Read-only

31	30	29	28	27	26	25	24
–	–	–	–	–	–	–	–
23	22	21	20	19	18	17	16
–	–	–	–	–	–	–	–
15	14	13	12	11	10	9	8
–	–	–	–	–	–	–	–
7	6	5	4	3	2	1	0
–	–	–	–	CHID3	CHID2	CHID1	CHID0

- **CHIDx: Channel ID.**

0 = Interrupt for PWM channel x is disabled.

1 = Interrupt for PWM channel x is enabled.

42.7.8 PWM Interrupt Status Register

Register Name: PWM_ISR

Address: 0xFFFB801C

Access Type: Read-only

31	30	29	28	27	26	25	24
–	–	–	–	–	–	–	–
23	22	21	20	19	18	17	16
–	–	–	–	–	–	–	–
15	14	13	12	11	10	9	8
–	–	–	–	–	–	–	–
7	6	5	4	3	2	1	0
–	–	–	–	CHID3	CHID2	CHID1	CHID0

- **CHIDx: Channel ID**

0 = No new channel period has been achieved since the last read of the PWM_ISR register.

1 = At least one new channel period has been achieved since the last read of the PWM_ISR register.

Note: Reading PWM_ISR automatically clears CHIDx flags.

42.7.9 PWM Channel Mode Register

Register Name: PWM_CMR[0..3]

Addresses: 0xFFFB8200 [0], 0xFFFB8220 [1], 0xFFFB8240 [2], 0xFFFB8260 [3]

Access Type: Read/Write

31	30	29	28	27	26	25	24
–	–	–	–	–	–	–	–

23	22	21	20	19	18	17	16
–	–	–	–	–	–	–	–

15	14	13	12	11	10	9	8
–	–	–	–	–	CPD	CPOL	CALG

7	6	5	4	3	2	1	0
–	–	–	–	CPRE			

- **CPRE: Channel Pre-scaler**

CPRE				Channel Pre-scaler
0	0	0	0	MCK
0	0	0	1	MCK/2
0	0	1	0	MCK/4
0	0	1	1	MCK/8
0	1	0	0	MCK/16
0	1	0	1	MCK/32
0	1	1	0	MCK/64
0	1	1	1	MCK/128
1	0	0	0	MCK/256
1	0	0	1	MCK/512
1	0	1	0	MCK/1024
1	0	1	1	CLKA
1	1	0	0	CLKB
Other				Reserved

- **CALG: Channel Alignment**

0 = The period is left aligned.

1 = The period is center aligned.

- **CPOL: Channel Polarity**

0 = The output waveform starts at a low level.

1 = The output waveform starts at a high level.

- **CPD: Channel Update Period**

0 = Writing to the PWM_CUPDx will modify the duty cycle at the next period start event.

1 = Writing to the PWM_CUPDx will modify the period at the next period start event.

42.7.10 PWM Channel Duty Cycle Register

Register Name: PWM_CDTY[0..3]

Addresses: 0xFFFB8204 [0], 0xFFFB8224 [1], 0xFFFB8244 [2], 0xFFFB8264 [3]

Access Type: Read/Write

31	30	29	28	27	26	25	24
CDTY							

23	22	21	20	19	18	17	16
CDTY							

15	14	13	12	11	10	9	8
CDTY							

7	6	5	4	3	2	1	0
CDTY							

Only the first 16 bits (internal channel counter size) are significant.

- **CDTY: Channel Duty Cycle**

Defines the waveform duty cycle. This value must be defined between 0 and CPRD (PWM_CPRx).

42.7.11 PWM Channel Period Register

Register Name: PWM_CPRD[0..3]

Addresses: 0xFFFB8208 [0], 0xFFFB8228 [1], 0xFFFB8248 [2], 0xFFFB8268 [3]

Access Type: Read/Write

31	30	29	28	27	26	25	24
CPRD							

23	22	21	20	19	18	17	16
CPRD							

15	14	13	12	11	10	9	8
CPRD							

7	6	5	4	3	2	1	0
CPRD							

Only the first 16 bits (internal channel counter size) are significant.

- **CPRD: Channel Period**

If the waveform is left-aligned, then the output waveform period depends on the counter source clock and can be calculated:

– By using the Master Clock (MCK) divided by an X given prescaler value (with X being 1, 2, 4, 8, 16, 32, 64, 128, 256, 512, or 1024). The resulting period formula will be:

$$\frac{(X \times CPRD)}{MCK}$$

– By using a Master Clock divided by one of both DIVA or DIVB divider, the formula becomes, respectively:

$$\frac{(CRPD \times DIVA)}{MCK} \text{ or } \frac{(CRPD \times DIVAB)}{MCK}$$

If the waveform is center-aligned, then the output waveform period depends on the counter source clock and can be calculated:

– By using the Master Clock (MCK) divided by an X given prescaler value (with X being 1, 2, 4, 8, 16, 32, 64, 128, 256, 512, or 1024). The resulting period formula will be:

$$\frac{(2 \times X \times CPRD)}{MCK}$$

– By using a Master Clock divided by one of both DIVA or DIVB divider, the formula becomes, respectively:

$$\frac{(2 \times CPRD \times DIVA)}{MCK} \text{ or } \frac{(2 \times CPRD \times DIVB)}{MCK}$$

42.7.12 PWM Channel Counter Register

Register Name: PWM_CCNT[0..3]

Addresses: 0xFFFB820C [0], 0xFFFB822C [1], 0xFFFB824C [2], 0xFFFB826C [3]

Access Type: Read-only

31	30	29	28	27	26	25	24
CNT							

23	22	21	20	19	18	17	16
CNT							

15	14	13	12	11	10	9	8
CNT							

7	6	5	4	3	2	1	0
CNT							

- **CNT: Channel Counter Register**

Internal counter value. This register is reset when:

- the channel is enabled (writing CHIDx in the PWM_ENA register).
- the counter reaches CPRD value defined in the PWM_CPRDx register if the waveform is left aligned.

42.7.13 PWM Channel Update Register

Register Name: PWM_CUPD[0..3]

Addresses: 0xFFFB8210 [0], 0xFFFB8230 [1], 0xFFFB8250 [2], 0xFFFB8270 [3]

Access Type: Write-only

31	30	29	28	27	26	25	24
CUPD							

23	22	21	20	19	18	17	16
CUPD							

15	14	13	12	11	10	9	8
CUPD							

7	6	5	4	3	2	1	0
CUPD							

This register acts as a double buffer for the period or the duty cycle. This prevents an unexpected waveform when modifying the waveform period or duty-cycle.

Only the first 16 bits (internal channel counter size) are significant.

CPD (PWM_CMRx Register)	
0	The duty-cycle (CDTY in the PWM_CDTYx register) is updated with the CUPD value at the beginning of the next period.
1	The period (CPRD in the PWM_CPRDx register) is updated with the CUPD value at the beginning of the next period.

43. AC97 Controller (AC97C)

43.1 Description

The AC97 Controller is the hardware implementation of the AC97 digital controller (DC'97) compliant with AC97 Component Specification 2.2. The AC97 Controller communicates with an audio codec (AC97) or a modem codec (MC'97) via the AC-link digital serial interface. All digital audio, modem and handset data streams, as well as control (command/status) informations are transferred in accordance to the AC-link protocol.

The AC97 Controller features a Peripheral DMA Controller (PDC) for audio streaming transfers. It also supports variable sampling rate and four Pulse Code Modulation (PCM) sample resolutions of 10, 16, 18 and 20 bits.

43.2 Embedded Characteristics

- Compatible with AC97 Component Specification V2.2
- Capable to Interface with a Single Analog Front end
- Three independent RX Channels and three independent TX Channels
  - One RX and one TX channel dedicated to the AC97 Analog Front end control
  - One RX and one TX channel for data transfers, associated with a PDC
  - One RX and one TX channel for data transfers with no PDC
- Time Slot Assigner allowing to assign up to 12 time slots to a channel
- Channels support mono or stereo up to 20 bit sample length
  - Variable sampling rate AC97 Codec Interface (48 kHz and below)

43.3 Block Diagram

Figure 43-1. Functional Block Diagram

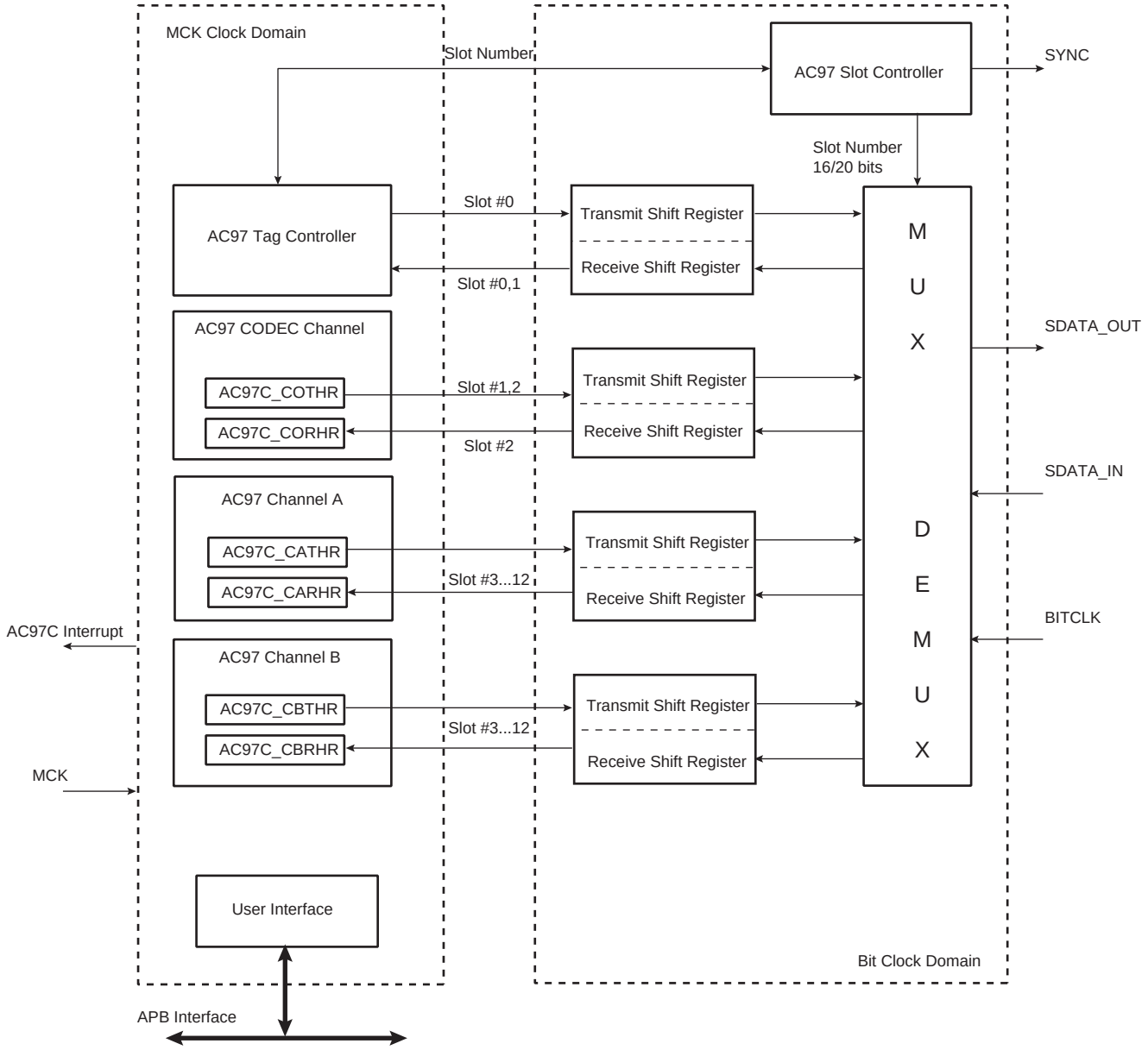

43.4 Pin Name List

Table 43-1. I/O Lines Description

Pin Name	Pin Description	Type
AC97CK	12.288-MHz bit-rate clock	Input
AC97RX	Receiver Data (Referred as SDATA_IN in AC-link spec)	Input
AC97FS	48-kHz frame indicator and synchronizer	Output
AC97TX	Transmitter Data (Referred as SDATA_OUT in AC-link spec)	Output

The AC97 reset signal provided to the primary codec can be generated by a PIO.

43.5 Application Block Diagram

Figure 43-2. Application Block diagram

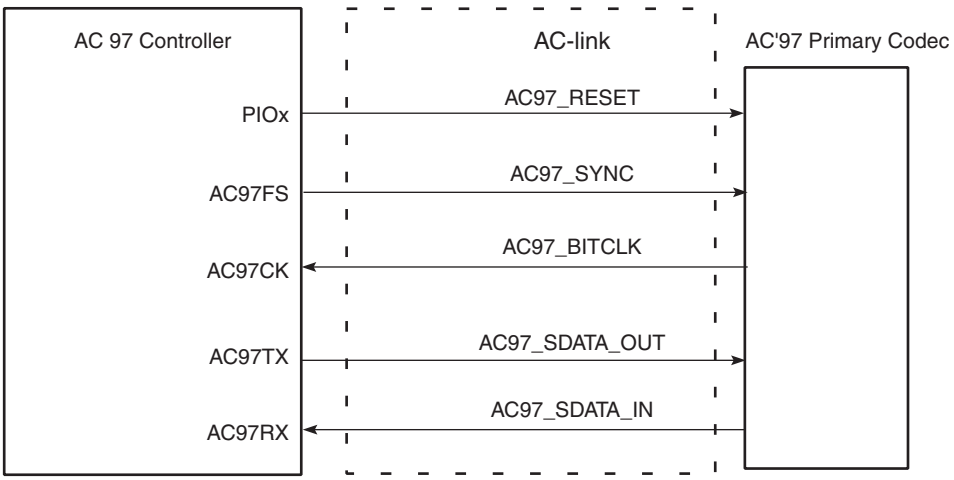

43.6 Product Dependencies

43.6.1 I/O Lines

The pins used for interfacing the compliant external devices may be multiplexed with PIO lines.

Before using the AC97 Controller receiver, the PIO controller must be configured in order for the AC97C receiver I/O lines to be in AC97 Controller peripheral mode.

Before using the AC97 Controller transmitter, the PIO controller must be configured in order for the AC97C transmitter I/O lines to be in AC97 Controller peripheral mode.

Table 43-2. I/O Lines

Instance	Signal	I/O Line	Peripheral
AC97C	AC97CK	PD9	A
AC97C	AC97FS	PD8	A
AC97C	AC97RX	PD6	A
AC97C	AC97TX	PD7	A

43.6.2 Power Management

The AC97 Controller is not continuously clocked. Its interface may be clocked through the Power Management Controller (PMC), therefore the programmer must first configure the PMC to enable the AC97 Controller clock.

The AC97 Controller has two clock domains. The first one is supplied by PMC and is equal to MCK. The second one is AC97CK which is sent by the AC97 Codec (Bit clock).

Signals that cross the two clock domains are re-synchronized. MCK clock frequency must be higher than the AC97CK (Bit Clock) clock frequency.

43.6.3 Interrupt

The AC97 Controller interface has an interrupt line connected to the Advanced Interrupt Controller (AIC). Handling interrupts requires programming the AIC before configuring the AC97C.

All AC97 Controller interrupts can be enabled/disabled by writing to the AC97 Controller Interrupt Enable/Disable Registers. Each pending and unmasked AC97 Controller interrupt will assert the interrupt line. The AC97 Controller interrupt service routine can get the interrupt source in two steps:

- Reading and ANDing AC97 Controller Interrupt Mask Register (AC97C_IMR) and AC97 Controller Status Register (AC97C_SR).
- Reading AC97 Controller Channel x Status Register (AC97C_CxSR).

Table 43-3. Peripheral IDs

Instance	ID
AC97C	24

43.7 Functional Description

43.7.1 Protocol overview

AC-link protocol is a bidirectional, fixed clock rate, serial digital stream. AC-link handles multiple input and output Pulse Code Modulation PCM audio streams, as well as control register accesses employing a Time Division Multiplexed (TDM) scheme that divides each audio frame in 12 outgoing and 12 incoming 20-bit wide data slots.

Figure 43-3. Bidirectional AC-link Frame with Slot Assignment

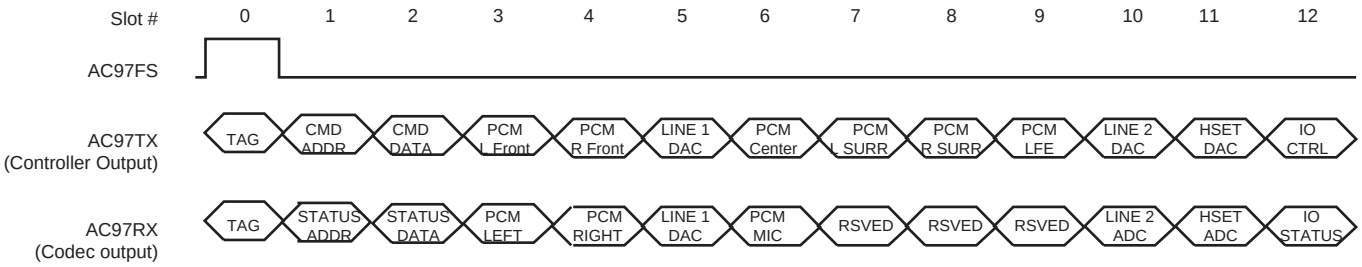

Table 43-4. AC-link Output Slots Transmitted from the AC97C Controller

Slot #	Pin Description
0	TAG
1	Command Address Port
2	Command Data Port
3,4	PCM playback Left/Right Channel
5	Modem Line 1 Output Channel
6, 7, 8	PCM Center/Left Surround/Right Surround
9	PCM LFE DAC
10	Modem Line 2 Output Channel
11	Modem Handset Output Channel
12	Modem GPIO Control Channel

Table 43-5. AC-link Input Slots Transmitted from the AC97C Controller

Slot #	Pin Description
0	TAG
1	Status Address Port
2	Status Data Port
3,4	PCM playback Left/Right Channel
5	Modem Line 1 ADC
6	Dedicated Microphone ADC
7, 8, 9	Vendor Reserved
10	Modem Line 2 ADC
11	Modem Handset Input ADC
12	Modem IO Status

43.7.2 Slot Description

43.7.2.1 Tag Slot

The tag slot, or slot 0, is a 16-bit wide slot that always goes at the beginning of an outgoing or incoming frame. Within tag slot, the first bit is a global bit that flags the entire frame validity. The next 12 bit positions sampled by the AC97 Controller indicate which of the corresponding 12 time slots contain valid data. The slot's last two bits (combined) called Codec ID, are used to distinguish primary and secondary codec.

The 16-bit wide tag slot of the output frame is automatically generated by the AC97 Controller according to the transmit request of each channel and to the SLOTREQ from the previous input frame, sent by the AC97 Codec, in Variable Sample Rate mode.

43.7.2.2 Codec Slot 1

The command/status slot is a 20-bit wide slot used to control features, and monitors status for AC97 Codec functions.

The control interface architecture supports up to sixty-four 16-bit wide read-write registers. Only the even registers are currently defined and addressed.

Slot 1's bitmap is the following:

- Bit 19 is for read-write command, 1= read, 0 = write.
- Bits [18:12] are for control register index.
- Bits [11:0] are reserved.

43.7.2.3 Codec Slot 2

Slot 2 is a 20-bit wide slot used to carry 16-bit wide AC97 Codec control register data. If the current command port operation is a read, the entire slot time is stuffed with zeros. Its bitmap is the following:

- Bits [19:4] are the control register data
- Bits [3:0] are reserved and stuffed with zeros.

43.7.2.4 Data Slots [3:12]

Slots [3:12] are 20-bit wide data slots, they usually carry audio PCM and/or modem I/O data.

43.7.3 AC97 Controller Channel Organization

The AC97 Controller features a Codec channel and 2 logical channels: Channel A, Channel B.

The Codec channel controls AC97 Codec registers, it enables write and read configuration values in order to bring the AC97 Codec to an operating state. The Codec channel always runs slot 1 and slot 2 exclusively, in both input and output directions.

Channel A, Channel B transfer data to/from AC97 codec. All audio samples and modem data must transit by these 2 channels. However, Channels A and B are connected to PDC channels thus making it suitable for audio streaming applications.

Each slot of the input or the output frame that belongs to this range [3 to 12] can be operated by Channel A or Channel B . The slot to channel assignment is configured by two registers:

- AC97 Controller Input Channel Assignment Register (AC97C_ICA)
- AC97 Controller Output Channel Assignment Register (AC97C_OCA)

The AC97 Controller Input Channel Assignment Register (AC97C_ICA) configures the input slot to channel assignment. The AC97 Controller Output Channel Assignment Register (AC97C_OCA) configures the output slot to channel assignment.

A slot can be left unassigned to a channel by the AC97 Controller. Slots 0, 1,and 2 cannot be assigned to Channel A or to Channel Bthrough the AC97C_OCA and AC97C_ICA Registers.

The width of sample data, that transit via the Channel varies and can take one of these values; 10, 16, 18 or 20 bits.

Figure 43-4. Logical Channel Assignment

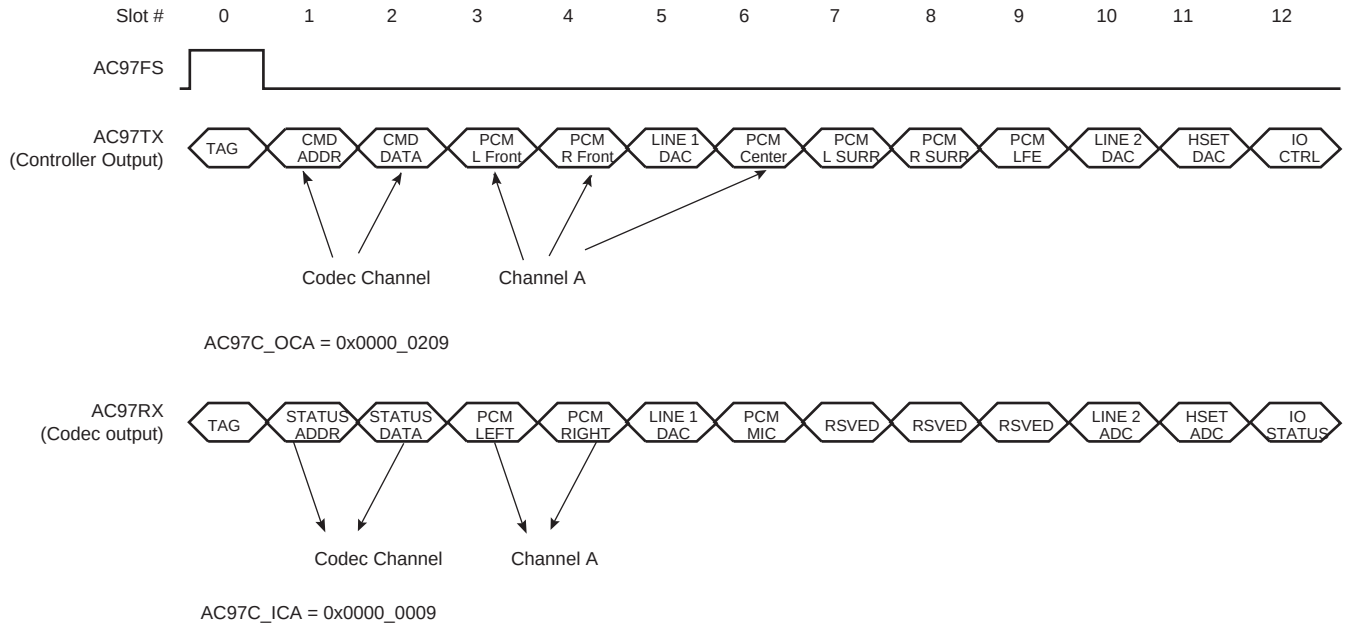

43.7.3.1 AC97 Controller Setup

The following operations must be performed in order to bring the AC97 Controller into an operating state:

1. Enable the AC97 Controller clock in the PMC controller.
2. Turn on AC97 function by enabling the ENA bit in AC97 Controller Mode Register (AC97C_MR).
3. Configure the input channel assignment by controlling the AC97 Controller Input Assignment Register (AC97C_ICA).
4. Configure the output channel assignment by controlling the AC97 Controller Input Assignment Register (AC97C_OCA).
5. Configure sample width for Channel A, Channel Bby writing the SIZE bit field in AC97C Channel x Mode Register (AC97C_CAMR), (AC97C_CBMR). The application can write 10, 16, 18,or 20-bit wide PCM samples through the AC97 interface and they will be transferred into 20-bit wide slots.
6. Configure data Endianness for Channel A, Channel B by writing CEM bit field in (AC97C_CAMR), (AC97C_CBMR) register. Data on the AC-link are shifted MSB first. The application can write little- or big-endian data to the AC97 Controller interface.
7. Configure the PIO controller to drive the RESET signal of the external Codec. The RESET signal must fulfill external AC97 Codec timing requirements.
8. Enable Channel A and/or Channel B by writing CEN bit field in AC97C_CxMR register.

43.7.3.2 Transmit Operation

The application must perform the following steps in order to send data via a channel to the AC97 Codec:

- Check if previous data has been sent by polling TXRDY flag in the AC97C Channel x Status Register (AC97_CxSR). x being one of the 2 channels.
- Write data to the AC97 Controller Channel x Transmit Holding Register (AC97C_CxTHR).

Once data has been transferred to the Channel x Shift Register, the TXRDY flag is automatically set by the AC97 Controller which allows the application to start a new write action. The application can also wait for an interrupt notice associated with TXRDY in order to send data. The interrupt remains active until TXRDY flag is cleared.

Figure 43-5. Audio Transfer (PCM L Front, PCM R Front) on Channel x

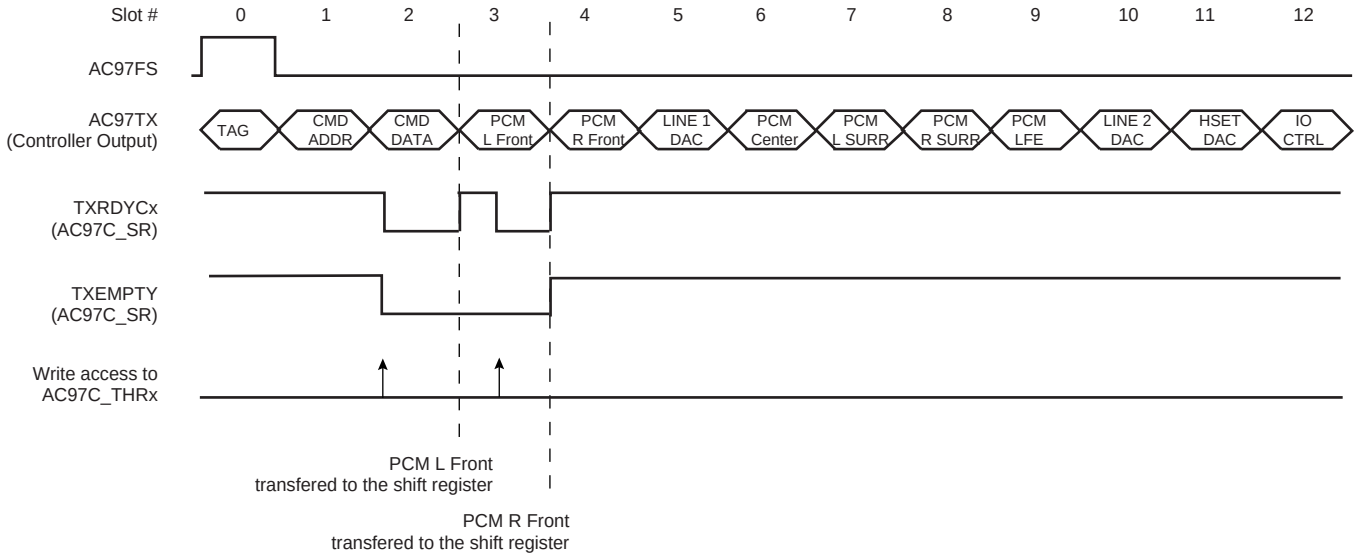

The TXEMPTY flag in the AC97 Controller Channel x Status Register (AC97C_CxSR) is set when all requested transmissions for a channel have been shifted on the AC-link. The application can either poll TXEMPTY flag in AC97C_CxSR or wait for an interrupt notice associated with the same flag.

In most cases, the AC97 Controller is embedded in chips that target audio player devices. In such cases, the AC97 Controller is exposed to heavy audio transfers. Using the polling technique increases processor overhead and may fail to keep the required pace under an operating system. In order to avoid these polling drawbacks, the application can perform audio streams by using PDC connected to channel A, which reduces processor overhead and increases performance especially under an operating system.

The PDC transmit counter values must be equal to the number of PCM samples to be transmitted, each sample goes in one slot.

43.7.3.3 AC97 Output Frame

The AC97 Controller outputs a thirteen-slot frame on the AC-Link. The first slot (tag slot or slot 0) flags the validity of the entire frame and the validity of each slot; whether a slot carries valid data or not. Slots 1 and 2 are used if the application performs control and status monitoring actions on AC97 Codec control/status registers. Slots [3:12] are used according to the content of the AC97 Controller Output Channel Assignment Register (AC97C_OCA). If the application performs many transmit requests on a channel, some of the slots associated to this channel or all of them will carry valid data.

43.7.3.4 Receive Operation

The AC97 Controller can also receive data from AC97 Codec. Data is received in the channel's shift register and then transferred to the AC97 Controller Channel x Read Holding Register. To read the newly received data, the application must perform the following steps:

- Poll RXRDY flag in AC97 Controller Channel x Status Register (AC97C_CxSR). x being one of the 2 channels.
- Read data from AC97 Controller Channel x Read Holding Register.

The application can also wait for an interrupt notice in order to read data from AC97C_CxRHR. The interrupt remains active until RXRDY is cleared by reading AC97C_CxSR.

The RXRDY flag in AC97C_CxSR is set automatically when data is received in the Channel x shift register. Data is then shifted to AC97C_CxRHR.

Figure 43-6. Audio Transfer (PCM L Front, PCM R Front) on Channel x

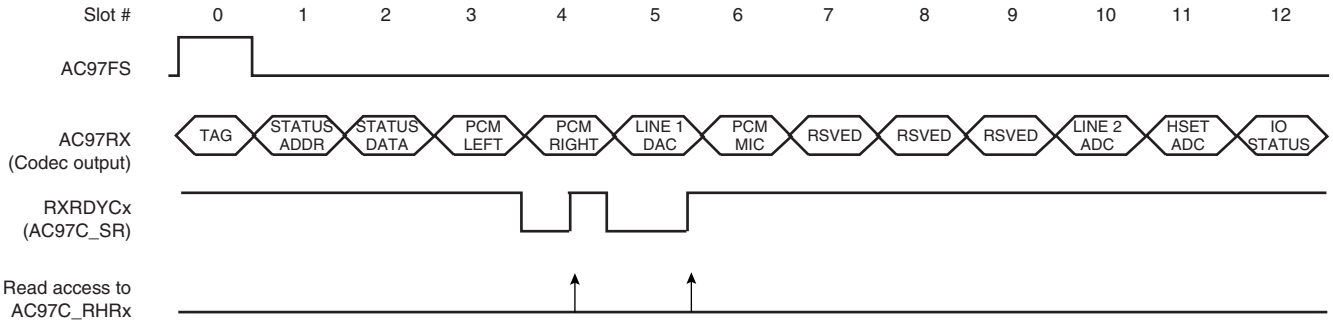

If the previously received data has not been read by the application, the new data overwrites the data already waiting in AC97C_CxRHR, therefore the OVRUN flag in AC97C_CxSR is raised. The application can either poll the OVRUN flag in AC97C_CxSR or wait for an interrupt notice. The interrupt remains active until the OVRUN flag in AC97C_CxSR is set.

The AC97 Controller can also be used in sound recording devices in association with an AC97 Codec. The AC97 Controller may also be exposed to heavy PCM transfers. The application can use the PDC connected to channel A in order to reduce processor overhead and increase performance especially under an operating system.

The PDC receive counter values must be equal to the number of PCM samples to be received, each sample goes in one slot.

43.7.3.5 AC97 Input Frame

The AC97 Controller receives a thirteen slot frame on the AC-Link sent by the AC97 Codec. The first slot (tag slot or slot 0) flags the validity of the entire frame and the validity of each slot; whether a slot carries valid data or not. Slots 1 and 2 are used if the application requires status informations from AC97 Codec. Slots [3:12] are used according to AC97 Controller Output Channel Assignment Register (AC97C_ICA) content. The AC97 Controller will not receive any data from any slot if AC97C_ICA is not assigned to a channel in input.

43.7.3.6 Configuring and Using Interrupts

Instead of polling flags in AC97 Controller Global Status Register (AC97C_SR) and in AC97 Controller Channel x Status Register (AC97C_CxSR), the application can wait for an interrupt notice. The following steps show how to configure and use interrupts correctly:

- Set the interruptible flag in AC97 Controller Channel x Mode Register (AC97C_CxMR).
- Set the interruptible event and channel event in AC97 Controller Interrupt Enable Register (AC97C_IER).

The interrupt handler must read both AC97 Controller Global Status Register (AC97C_SR) and AC97 Controller Interrupt Mask Register (AC97C_IMR) and AND them to get the real interrupt source. Furthermore, to get which event was activated, the interrupt handler has to read AC97 Controller Channel x Status Register (AC97C_CxSR), x being the channel whose event triggers the interrupt.

The application can disable event interrupts by writing in AC97 Controller Interrupt Disable Register (AC97C_IDR). The AC97 Controller Interrupt Mask Register (AC97C_IMR) shows which event can trigger an interrupt and which one cannot.

43.7.3.7 Endianness

Endianness can be managed automatically for each channel, except for the Codec channel, by writing to Channel Endianness Mode (CEM) in AC97C_CxMR. This enables transferring data on AC-link in Big Endian format without any additional operation.

43.7.3.8 To Transmit a Word Stored in Big Endian Format on AC-link

Word to be written in AC97 Controller Channel x Transmit Holding Register (AC97C_CxTHR) (as it is stored in memory or microprocessor register).

31 – 24	23 – 16	15 – 8	7 – 0
Byte0[7:0]	Byte1[7:0]	Byte2[7:0]	Byte3[7:0]

Word stored in Channel x Transmit Holding Register (AC97C_CxTHR) (data to transmit).

31 – 24	23 – 20	19 – 16	15 – 8	7 – 0
–	–	Byte2[3:0]	Byte1[7:0]	Byte0[7:0]

Data transmitted on appropriate slot: data[19:0] = {Byte2[3:0], Byte1[7:0], Byte0[7:0]}.

43.7.3.9 To Transmit A Halfword Stored in Big Indian Format on AC-link

Halfword to be written in AC97 Controller Channel x Transmit Holding Register (AC97C_CxTHR).

31 – 24	23 – 16	15 – 8	7 – 0
–	–	Byte0[7:0]	Byte1[7:0]

Halfword stored in AC97 Controller Channel x Transmit Holding Register (AC97C_CxTHR) (data to transmit).

31 – 24	23 – 16	15 – 8	7 – 0
–	–	Byte1[7:0]	Byte0[7:0]

Data emitted on related slot: data[19:0] = {0x0, Byte1[7:0], Byte0[7:0]}.

43.7.3.10 To Transmit a10-bit Sample Stored in Big Endian Format on AC-link

Halfword to be written in AC97 Controller Channel x Transmit Holding Register (AC97C_CxTHR).

31 – 24	23 – 16	15 – 8	7 – 0
–	–	Byte0[7:0]	{0x00, Byte1[1:0]}

Halfword stored in AC97 Controller Channel x Transmit Holding Register (AC97C_CxTHR) (data to transmit).

31 – 24	23 – 16	15 – 10	9 – 8	7 – 0
–	–	–	Byte1 [1:0]	Byte0[7:0]

Data emitted on related slot: data[19:0] = {0x000, Byte1[1:0], Byte0[7:0]}.

43.7.3.11 To Receive Word transfers

Data received on appropriate slot: data[19:0] = {Byte2[3:0], Byte1[7:0], Byte0[7:0]}.

Word stored in AC97 Controller Channel x Receive Holding Register (AC97C_CxRHR) (Received Data).

31 – 24	23 – 20	19 – 16	15 – 8	7 – 0
–	–	Byte2[3:0]	Byte1[7:0]	Byte0[7:0]

Data is read from AC97 Controller Channel x Receive Holding Register (AC97C_CxRHR) when Channel x data size is greater than 16 bits and when big-endian mode is enabled (data written to memory).

31 – 24	23 – 16	15 – 8	7 – 0
Byte0[7:0]	Byte1[7:0]	{0x0, Byte2[3:0]}	0x00

43.7.3.12 To Receive Halfword Transfers

Data received on appropriate slot: data[19:0] = {0x0, Byte1[7:0], Byte0[7:0]}.

Halfword stored in AC97 Controller Channel x Receive Holding Register (AC97C_CxRHR) (Received Data).

31 – 24	23 – 16	15 – 8	7 – 0
–	–	Byte1[7:0]	Byte0[7:0]

Data is read from AC97 Controller Channel x Receive Holding Register (AC97C_CxRHR) when data size is equal to 16 bits and when big-endian mode is enabled.

31 – 24	23 – 16	15 – 8	7 – 0
–	–	Byte0[7:0]	Byte1[7:0]

43.7.3.13 To Receive 10-bit Samples

Data received on appropriate slot: data[19:0] = {0x000, Byte1[1:0], Byte0[7:0]}.Halfword stored in AC97 Controller Channel x Receive Holding Register (AC97C_CxRHR) (Received Data)

31 – 24	23 – 16	15 – 10	9 – 8	7 – 0
–	–	–	Byte1 [1:0]	Byte0[7:0]

Data read from AC97 Controller Channel x Receive Holding Register (AC97C_CxRHR) when data size is equal to 10 bits and when big-endian mode is enabled.

31 – 24	23 – 16	15 – 8	7 – 3	1 – 0
–	–	Byte0[7:0]	0x00	Byte1 [1:0]

43.7.4 Variable Sample Rate

The problem of variable sample rate can be summarized by a simple example. When passing a 44.1 kHz stream across the AC-link, for every 480 audio output frames that are sent across, 441 of them must contain valid sample data. The new AC97 standard approach calls for the addition of “on-demand” slot request flags. The AC97 Codec examines its sample rate control register, the state of its FIFOs, and the incoming SDATA_OUT tag bits (slot 0) of each output frame and then determines which SLOTREQ bits to set active (low). These bits are passed from the AC97 Codec to the AC97 Controller in slot 1/SLOTREQ in every audio input frame. Each time the AC97 controller sees one or more of the newly defined slot request flags set active (low) in a given audio input frame, it must pass along the next PCM sample for the corresponding slot(s) in the AC-link output frame that immediately follows.

The variable Sample Rate mode is enabled by performing the following steps:

- Setting the VRA bit in the AC97 Controller Mode Register (AC97C_MR).
- Enable Variable Rate mode in the AC97 Codec by performing a transfer on the Codec channel.

Slot 1 of the input frame is automatically interpreted as SLOTREQ signaling bits. The AC97 Controller will automatically fill the active slots according to both SLOTREQ and AC97C_OCA register in the next transmitted frame.

43.7.5 Power Management

43.7.5.1 Powering Down the AC-Link

The AC97 Codecs can be placed in low power mode. The application can bring AC97 Codec to a power down state by performing sequential writes to AC97 Codec powerdown register. Both the bit clock (clock delivered by AC97 Codec, AC97CK) and the input line (AC97RX) are held at a logic low voltage level. This puts AC97 Codec in power down state while all its registers are still holding current values. Without the bit clock, the AC-link is completely in a power down state.

The AC97 Controller should not attempt to play or capture audio data until it has awakened AC97 Codec.

To set the AC97 Codec in low power mode, the PR4 bit in the AC97 Codec powerdown register (Codec address 0x26) must be set to 1. Then the primary Codec drives both AC97CK and AC97RX to a low logic voltage level.

The following operations must be done to put AC97 Codec in low power mode:

- Disable Channel A clearing CEN field in the AC97C_CAMR register.
- Disable Channel B clearing CEN field in the AC97C_CBMR register.
- Write 0x2680 value in the AC97C_COTHR register.
- Poll the TXEMPTY flag in AC97C_CxSR registers for the 2 channels.

At this point AC97 Codec is in low power mode.

43.7.5.2 Waking up the AC-link

There are two methods to bring the AC-link out of low power mode. Regardless of the method, it is always the AC97 Controller that performs the wake-up.

43.7.5.3 Wake-up Triggered by the AC97 Controller

The AC97 Controller can wake up the AC97 Codec by issuing either a cold or a warm reset.

The AC97 Controller can also wake up the AC97 Codec by asserting AC97FS signal, however this action should not be performed for a minimum period of four audio frames following the frame in which the powerdown was issued.

43.7.5.4 Wake-up Triggered by the AC97 Codec

This feature is implemented in AC97 modem codecs that need to report events such as Caller-ID and wake-up on ring.

The AC97 Codec can drive AC97RX signal from low to high level and holding it high until the controller issues either a cold or a worm reset. The AC97RX rising edge is asynchronously (regarding AC97FS) detected by the AC97 Controller. If WKUP bit is enabled in AC97C_IMR register, an interrupt is triggered that wakes up the AC97 Controller which should then immediately issue a cold or a warm reset.

If the processor needs to be awakened by an external event, the AC97RX signal must be externally connected to the WAKEUP entry of the system controller.

Figure 43-7. AC97 Power-Down/Up Sequence

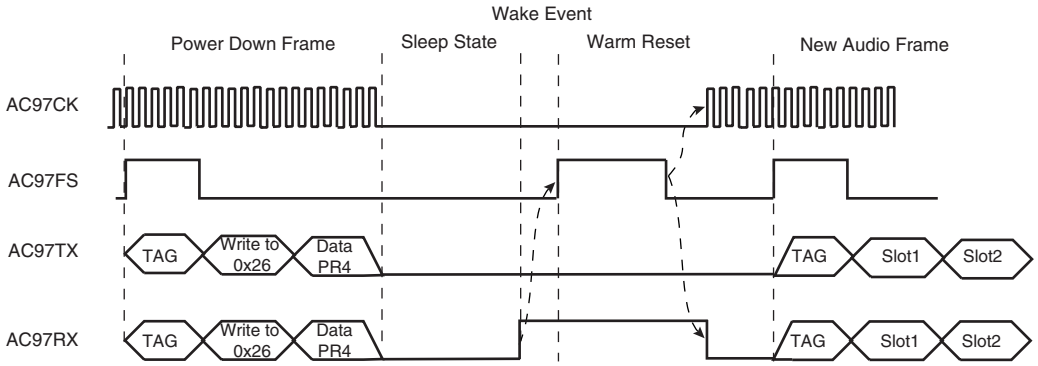

43.7.5.5 *AC97 Codec Reset*

There are three ways to reset an AC97 Codec.

43.7.5.6 *Cold AC97 Reset*

A cold reset is generated by asserting the RESET signal low for the minimum specified time (depending on the AC97 Codec) and then by de-asserting RESET high. AC97CK and AC97FS is reactivated and all AC97 Codec registers are set to their default power-on values. Transfers on AC-link can resume.

The RESET signal will be controlled via a PIO line. This is how an application should perform a cold reset:

- Clear and set ENA flag in the AC97C_MR register to reset the AC97 Controller
- Clear PIO line output controlling the AC97 RESET signal
- Wait for the minimum specified time
- Set PIO line output controlling the AC97 RESET signal

AC97CK, the clock provided by AC97 Codec, is detected by the controller.

43.7.5.7 *Warm AC97 Reset*

A warm reset reactivates the AC-link without altering AC97 Codec registers. A warm reset is signaled by driving AC97FX signal high for a minimum of 1us in the absence of AC97CK. In the absence of AC97CK, AC97FX is treated as an asynchronous (regarding AC97FX) input used to signal a warm reset to AC97 Codec.

This is the right way to perform a warm reset:

- Set WRST in the AC97C_MR register.
- Wait for at least 1us
- Clear WRST in the AC97C_MR register.

The application can check that operations have resumed by checking SOF flag in the AC97C_SR register or wait for an interrupt notice if SOF is enabled in AC97C_IMR.

43.8 AC97 Controller (AC97C) User Interface

Table 43-6. Register Mapping

Offset	Register	Name	Access	Reset
0x0-0x4	Reserved	–	–	–
0x8	Mode Register	AC97C_MR	Read-write	0x0
0xC	Reserved	–	–	–
0x10	Input Channel Assignment Register	AC97C_ICA	Read-write	0x0
0x14	Output Channel Assignment Register	AC97C_OCA	Read-write	0x0
0x18-0x1C	Reserved	–	–	–
0x20	Channel A Receive Holding Register	AC97C_CARHR	Read	0x0
0x24	Channel A Transmit Holding Register	AC97C_CATHR	Write	–
0x28	Channel A Status Register	AC97C_CASR	Read	0x0
0x2C	Channel A Mode Register	AC97C_CAMR	Read-write	0x0
0x30	Channel B Receive Holding Register	AC97C_CBRHR	Read	0x0
0x34	Channel B Transmit Holding Register	AC97C_CBTHR	Write	–
0x38	Channel B Status Register	AC97C_CBSR	Read	0x0
0x3C	Channel B Mode Register	AC97C_CBMR	Read-write	0x0
0x40	Codec Channel Receive Holding Register	AC97C_CORHR	Read	0x0
0x44	Codec Channel Transmit Holding Register	AC97C_COTHR	Write	–
0x48	Codec Status Register	AC97C_COSR	Read	0x0
0x4C	Codec Mode Register	AC97C_COMR	Read-write	0x0
0x50	Status Register	AC97C_SR	Read	0x0
0x54	Interrupt Enable Register	AC97C_IER	Write	–
0x58	Interrupt Disable Register	AC97C_IDR	Write	–
0x5C	Interrupt Mask Register	AC97C_IMR	Read	0x0
0x60-0xFB	Reserved	–	–	–
0x100-0x124	Reserved for Peripheral DMA Controller (PDC) registers related to channel transfers	–	–	–

43.8.1 AC97 Controller Mode Register

Register Name: AC97C_MR

Address: 0xFFFAC008

Access Type: Read-Write

31	30	29	28	27	26	25	24
–	–	–	–	–	–	–	–
23	22	21	20	19	18	17	16
–	–	–	–	–	–	–	–
15	14	13	12	11	10	9	8
–	–	–	–	–	–	–	–
7	6	5	4	3	2	1	0
–	–	–	–	–	VRA	WRST	ENA

- **VRA: Variable Rate (for Data Slots 3-12)**

0: Variable Rate is inactive. (48 kHz only)

1: Variable Rate is active.

- **WRST: Warm Reset**

0: Warm Reset is inactive.

1: Warm Reset is active.

- **ENA: AC97 Controller Global Enable**

0: No effect. AC97 function as well as access to other AC97 Controller registers are disabled.

1: Activates the AC97 function.

43.8.2 AC97 Controller Input Channel Assignment Register

Register Name: AC97C_ICA

Address: 0xFFFAC010

Access Type: Read-write

31	30	29	28	27	26	25	24
–	–	CHID12			CHID11		
23	22	21	20	19	18	17	16
CHID10			CHID9			CHID8	
15	14	13	12	11	10	9	8
CHID8	CHID7			CHID6			CHID5
7	6	5	4	3	2	1	0
CHID5		CHID4			CHID3		

- **CHIDx: Channel ID** for the input slot x

CHIDx	Selected Receive Channel
0x0	None. No data will be received during this slot time
0x1	Channel A data will be received during this slot time.
0x2	Channel B data will be received during this slot time

43.8.3 AC97 Controller Output Channel Assignment Register

Register Name: AC97C_OCA

Address: 0xFFFAC014

Access Type: Read-write

31	30	29	28	27	26	25	24
–	–	CHID12			CHID11		
23	22	21	20	19	18	17	16
CHID10			CHID9			CHID8	
15	14	13	12	11	10	9	8
CHID8	CHID7			CHID6			CHID5
7	6	5	4	3	2	1	0
CHID5		CHID4			CHID3		

- **CHIDx: Channel ID** for the output slot x

CHIDx	Selected Transmit Channel
0x0	None. No data will be transmitted during this slot time
0x1	Channel A data will be transferred during this slot time.
0x2	Channel B data will be transferred during this slot time

43.8.4 AC97 Controller Codec Channel Receive Holding Register

Register Name: AC97C_CORHR

Address: 0xFFFAC040

Access Type: Read-only

31	30	29	28	27	26	25	24
–	–	–	–	–	–	–	–
23	22	21	20	19	18	17	16
–	–	–	–	–	–	–	–
15	14	13	12	11	10	9	8
SDATA							
7	6	5	4	3	2	1	0
SDATA							

- **SDATA: Status Data**

Data sent by the CODEC in the third AC97 input frame slot (Slot 2).

43.8.5 AC97 Controller Codec Channel Transmit Holding Register

Register Name: AC97C_COTHR

Address: 0xFFFAC044

Access Type: Write-only

31	30	29	28	27	26	25	24
–	–	–	–	–	–	–	–
23	22	21	20	19	18	17	16
READ	CADDR						
15	14	13	12	11	10	9	8
CDATA							
7	6	5	4	3	2	1	0
CDATA							

- **READ: Read-write command**

0: Write operation to the CODEC register indexed by the CADDR address.

1: Read operation to the CODEC register indexed by the CADDR address.

This flag is sent during the second AC97 frame slot

- **CADDR: CODEC control register index**

Data sent to the CODEC in the second AC97 frame slot.

- **CDATA: Command Data**

Data sent to the CODEC in the third AC97 frame slot (Slot 2).

43.8.6 AC97 Controller Channel A, Channel B, Receive Holding Register

Register Name: AC97C_CARHR, AC97C_CBRHR

Address: 0xFFFAC020

Address: 0xFFFAC030

Access Type: Read-only

31	30	29	28	27	26	25	24
–	–	–	–	–	–	–	–
23	22	21	20	19	18	17	16
–	–	–	–	RDATA			
15	14	13	12	11	10	9	8
RDATA							
7	6	5	4	3	2	1	0
RDATA							

- **RDATA: Receive Data**

Received Data on channel x.

43.8.7 AC97 Controller Channel A, Channel B, Transmit Holding Register

Register Name: AC97C_CATHR, AC97C_CBTHR

Address: 0xFFFAC024

Address: 0xFFFAC034

Access Type: Write-only

31	30	29	28	27	26	25	24
–	–	–	–	–	–	–	–
23	22	21	20	19	18	17	16
–	–	–	–	TDATA			
15	14	13	12	11	10	9	8
TDATA							
7	6	5	4	3	2	1	0
TDATA							

- **TDATA: Transmit Data**

Data to be sent on channel x.

43.8.8 AC97 Controller Channel A Status Register

Register Name: AC97C_CASR

Address: 0xFFFAC028

Access Type: Read-only

31	30	29	28	27	26	25	24
–	–	–	–	–	–	–	–
23	22	21	20	19	18	17	16
–	–	–	–	–	–	–	–
15	14	13	12	11	10	9	8
RXBUFF	ENDRX	–	–	TXBUFE	ENDTX	–	–
7	6	5	4	3	2	1	0
–	–	OVRUN	RXRDY	–	UNRUN	TXEMPTY	TXRDY

- **TXRDY: Channel Transmit Ready**

0: Data has been loaded in Channel Transmit Register and is waiting to be loaded in the Channel Transmit Shift Register.

1: Channel Transmit Register is empty.

- **TXEMPTY: Channel Transmit Empty**

0: Data remains in the Channel Transmit Register or is currently transmitted from the Channel Transmit Shift Register.

1: Data in the Channel Transmit Register have been loaded in the Channel Transmit Shift Register and sent to the codec.

- **UNRUN: Transmit Underrun**

Active only when Variable Rate Mode is enabled (VRA bit set in the AC97C_MR register). Automatically cleared by a processor read operation.

0: No data has been requested from the channel since the last read of the Status Register, or data has been available each time the CODEC requested new data from the channel since the last read of the Status Register.

1: Data has been emitted while no valid data to send has been previously loaded into the Channel Transmit Shift Register since the last read of the Status Register.

- **RXRDY: Channel Receive Ready**

0: Channel Receive Holding Register is empty.

1: Data has been received and loaded in Channel Receive Holding Register.

- **OVRUN: Receive Overrun**

Automatically cleared by a processor read operation.

0: No data has been loaded in the Channel Receive Holding Register while previous data has not been read since the last read of the Status Register.

1: Data has been loaded in the Channel Receive Holding Register while previous data has not yet been read since the last read of the Status Register.

- **ENDTX: End of Transmission for Channel A**

0: The register AC97C_CATCR has not reached 0 since the last write in AC97C_CATCR or AC97C_CANCR.

1: The register AC97C_CATCR has reached 0 since the last write in AC97C_CATCR or AC97C_CATNCR.

- **TXBUFE: Transmit Buffer Empty for Channel A**

0: AC97C_CATCR or AC97C_CATNCR have a value other than 0.

1: Both AC97C_CATCR and AC97C_CATNCR have a value of 0.

- **ENDRX: End of Reception for Channel A**

0: The register AC97C_CARCR has not reached 0 since the last write in AC97C_CARCR or AC97C_CARNCR.

1: The register AC97C_CARCR has reached 0 since the last write in AC97C_CARCR or AC97C_CARNCR.

- **RXBUFF: Receive Buffer Full for Channel A**

0: AC97C_CARCR or AC97C_CARNCR have a value other than 0.

1: Both AC97C_CARCR and AC97C_CARNCR have a value of 0.

43.8.9 AC97 Controller Channel B Status Register

Register Name: AC97C_CBSR

Address: 0xFFFAC038

Access Type: Read-only

31	30	29	28	27	26	25	24
–	–	–	–	–	–	–	–
23	22	21	20	19	18	17	16
–	–	–	–	–	–	–	–
15	14	13	12	11	10	9	8
RXBUFF	ENDRX	–	–	–	TXBUFE	ENDTX	–
7	6	5	4	3	2	1	0
–	–	OVRUN	RXRDY	–	UNRUN	TXEMPTY	TXRDY

- **TXRDY: Channel Transmit Ready**

0: Data has been loaded in Channel Transmit Register and is waiting to be loaded in the Channel Transmit Shift Register.

1: Channel Transmit Register is empty.

- **TXEMPTY: Channel Transmit Empty**

0: Data remains in the Channel Transmit Register or is currently transmitted from the Channel Transmit Shift Register.

1: Data in the Channel Transmit Register have been loaded in the Channel Transmit Shift Register and sent to the codec.

- **UNRUN: Transmit Underrun**

Active only when Variable Rate Mode is enabled (VRA bit set in the AC97C_MR register). Automatically cleared by a processor read operation.

0: No data has been requested from the channel since the last read of the Status Register, or data has been available each time the CODEC requested new data from the channel since the last read of the Status Register.

1: Data has been emitted while no valid data to send has been previously loaded into the Channel Transmit Shift Register since the last read of the Status Register.

- **RXRDY: Channel Receive Ready**

0: Channel Receive Holding Register is empty.

1: Data has been received and loaded in Channel Receive Holding Register.

- **OVRUN: Receive Overrun**

Automatically cleared by a processor read operation.

0: No data has been loaded in the Channel Receive Holding Register while previous data has not been read since the last read of the Status Register.

1: Data has been loaded in the Channel Receive Holding Register while previous data has not yet been read since the last read of the Status Register.

- **ENDTX: End of Transmission for Channel B**

0: The register AC97C_CBTCR has not reached 0 since the last write in AC97C_CBTCR or AC97C_CBNCR.

1: The register AC97C_CBTCR has reached 0 since the last write in AC97C_CBTCR or AC97C_CBTNCR.

- **TXBUFE: Transmit Buffer Empty for Channel B**

0: AC97C_CBTCR or AC97C_CBTNCR have a value other than 0.

1: Both AC97C_CBTCR and AC97C_CBTNCR have a value of 0.

- **ENDRX: End of Reception for Channel B**

0: The register AC97C_CBRCR has not reached 0 since the last write in AC97C_CBRCR or AC97C_CBRNCR.

1: The register AC97C_CBRCR has reached 0 since the last write in AC97C_CBRCR or AC97C_CBRNCR.

- **RXBUFF: Receive Buffer Full for Channel B**

0: AC97C_CBRCR or AC97C_CBRNCR have a value other than 0.

1: Both AC97C_CBRCR and AC97C_CBRNCR have a value of 0.

43.8.10 AC97 Controller Codec Status Register

Register Name: AC97C_COSR

Address: 0xFFFAC048

Access Type: Read-only

31	30	29	28	27	26	25	24
–	–	–	–	–	–	–	–
23	22	21	20	19	18	17	16
–	–	–	–	–	–	–	–
15	14	13	12	11	10	9	8
–	–	–	–	–	–	–	–
7	6	5	4	3	2	1	0
–	–	OVRUN	RXRDY	–	UNRUN	TXEMPTY	TXRDY

- **TXRDY: Channel Transmit Ready**

0: Data has been loaded in Channel Transmit Register and is waiting to be loaded in the Channel Transmit Shift Register.

1: Channel Transmit Register is empty.

- **TXEMPTY: Channel Transmit Empty**

0: Data remains in the Channel Transmit Register or is currently transmitted from the Channel Transmit Shift Register.

1: Data in the Channel Transmit Register have been loaded in the Channel Transmit Shift Register and sent to the codec.

- **UNRUN: Transmit Underrun**

Active only when Variable Rate Mode is enabled (VRA bit set in the AC97C_MR register). Automatically cleared by a processor read operation.

0: No data has been requested from the channel since the last read of the Status Register, or data has been available each time the CODEC requested new data from the channel since the last read of the Status Register.

1: Data has been emitted while no valid data to send has been previously loaded into the Channel Transmit Shift Register since the last read of the Status Register.

- **RXRDY: Channel Receive Ready**

0: Channel Receive Holding Register is empty.

1: Data has been received and loaded in Channel Receive Holding Register.

- **OVRUN: Receive Overrun**

Automatically cleared by a processor read operation.

0: No data has been loaded in the Channel Receive Holding Register while previous data has not been read since the last read of the Status Register.

1: Data has been loaded in the Channel Receive Holding Register while previous data has not yet been read since the last read of the Status Register.

43.8.11 AC97 Controller Channel A Mode Register

Register Name: AC97C_CAMR

Address: 0xFFFAC02C

Access Type: Read-write

31	30	29	28	27	26	25	24
–	–	–	–	–	–	–	–
23	22	21	20	19	18	17	16
–	PDCEN	CEN	–	–	CEM	SIZE	
15	14	13	12	11	10	9	8
RXBUFF	ENDRX	–	–	TXBUFE	ENDTX	–	–
7	6	5	4	3	2	1	0
–	–	OVRUN	RXRDY	–	UNRUN	TXEMPTY	TXRDY

- **TXRDY: Channel Transmit Ready Interrupt Enable**
- **TXEMPTY: Channel Transmit Empty Interrupt Enable**
- **UNRUN: Transmit Underrun Interrupt Enable**
- **RXRDY: Channel Receive Ready Interrupt Enable**
- **OVRUN: Receive Overrun Interrupt Enable**
- **ENDTX: End of Transmission for Channel A Interrupt Enable**
- **TXBUFE: Transmit Buffer Empty for Channel A Interrupt Enable**

0: Read: the corresponding interrupt is disabled. Write: disables the corresponding interrupt.

1: Read: the corresponding interrupt is enabled. Write: enables the corresponding interrupt.

- **ENDRX: End of Reception for Channel A Interrupt Enable**

0: Read: the corresponding interrupt is disabled. Write: disables the corresponding interrupt.

1: Read: the corresponding interrupt is enabled. Write: enables the corresponding interrupt.

- **RXBUFF: Receive Buffer Full for Channel A Interrupt Enable**

0: Read: the corresponding interrupt is disabled. Write: disables the corresponding interrupt.

1: Read: the corresponding interrupt is enabled. Write: enables the corresponding interrupt.

- **SIZE: Channel A Data Size**

SIZE Encoding

SIZE	Selected Data Size
0x0	20 bits
0x1	18 bits
0x2	16 bits
0x3	10 bits

Note: Each time slot in the data phase is 20 bit long. For example, if a 16-bit sample stream is being played to an AC 97 DAC, the first 16 bit positions are presented to the DAC MSB-justified. They are followed by the next four bit positions that the AC97 Controller fills with zeroes. This process ensures that the least significant bits do not introduce any DC biasing, regardless of the implemented DAC's resolution (16-, 18-, or 20-bit)

- **CEM: Channel A Endian Mode**

0: Transferring Data through Channel A is straight forward (Little-Endian).

1: Transferring Data through Channel A from/to a memory is performed with from/to Big-Endian format translation.

- **CEN: Channel A Enable**

0: Data transfer is disabled on Channel A.

1: Data transfer is enabled on Channel A.

- **PDCEN: Peripheral Data Controller Channel Enable**

0: Channel A is not transferred through a Peripheral Data Controller Channel. Related PDC flags are ignored or not generated.

1: Channel A is transferred through a Peripheral Data Controller Channel. Related PDC flags are taken into account or generated.

43.8.12 AC97 Controller Channel B Mode Register

Register Name: AC97C_CBMR

Address: 0xFFFAC03C

Access Type: Read-write

31	30	29	28	27	26	25	24
–	–	–	–	–	–	–	–
23	22	21	20	19	18	17	16
–	PDCEN	CEN	–	–	CEM	SIZE	
15	14	13	12	11	10	9	8
RXBUFF	ENDRX	–	–	TXBUFE	ENDTX	–	–
7	6	5	4	3	2	1	0
–	–	OVRUN	RXRDY	–	UNRUN	TXEMPTY	TXRDY

- **TXRDY: Channel Transmit Ready Interrupt Enable**
- **TXEMPTY: Channel Transmit Empty Interrupt Enable**
- **UNRUN: Transmit Underrun Interrupt Enable**
- **RXRDY: Channel Receive Ready Interrupt Enable**
- **OVRUN: Receive Overrun Interrupt Enable**
- **ENDTX: End of Transmission for Channel B Interrupt Enable**
- **TXBUFE: Transmit Buffer Empty for Channel B Interrupt Enable**

0: Read: the corresponding interrupt is disabled. Write: disables the corresponding interrupt.

1: Read: the corresponding interrupt is enabled. Write: enables the corresponding interrupt.

- **ENDRX: End of Reception for Channel B Interrupt Enable**

0: Read: the corresponding interrupt is disabled. Write: disables the corresponding interrupt.

1: Read: the corresponding interrupt is enabled. Write: enables the corresponding interrupt.

- **RXBUFF: Receive Buffer Full for Channel B Interrupt Enable**

0: Read: the corresponding interrupt is disabled. Write: disables the corresponding interrupt.

1: Read: the corresponding interrupt is enabled. Write: enables the corresponding interrupt.

- **SIZE: Channel B Data Size**

SIZE Encoding

SIZE	Selected Data Size
0x0	20 bits
0x1	18 bits
0x2	16 bits
0x3	10 bits

Note: Each time slot in the data phase is 20 bit long. For example, if a 16-bit sample stream is being played to an AC 97 DAC, the first 16 bit positions are presented to the DAC MSB-justified. They are followed by the next four bit positions that the AC97 Controller fills with zeroes. This process ensures that the least significant bits do not introduce any DC biasing, regardless of the implemented DAC's resolution (16-, 18-, or 20-bit)

- **CEM: Channel B Endian Mode**

0: Transferring Data through Channel B is straight forward (Little-Endian).

1: Transferring Data through Channel B from/to a memory is performed with from/to Big-Endian format translation.

- **CEN: Channel B Enable**

0: Data transfer is disabled on Channel B.

1: Data transfer is enabled on Channel B.

- **PDCEN: Peripheral Data Controller Channel Enable**

0: Channel B is not transferred through a Peripheral Data Controller Channel. Related PDC flags are ignored or not generated.

1: Channel B is transferred through a Peripheral Data Controller Channel. Related PDC flags are taken into account or generated.

43.8.13 AC97 Controller Codec Mode Register

Register Name: AC97C_COMR

Address: 0xFFFAC04C

Access Type: Read-write

31	30	29	28	27	26	25	24
–	–	–	–	–	–	–	–
23	22	21	20	19	18	17	16
–	–	–	–	–	–	–	–
15	14	13	12	11	10	9	8
–	–	–	–	–	–	–	–
7	6	5	4	3	2	1	0
–	–	OVRUN	RXRDY	–	UNRUN	TXEMPTY	TXRDY

- **TXRDY: Channel Transmit Ready Interrupt Enable**
- **TXEMPTY: Channel Transmit Empty Interrupt Enable**
- **UNRUN: Transmit Underrun Interrupt Enable**
- **RXRDY: Channel Receive Ready Interrupt Enable**
- **OVRUN: Receive Overrun Interrupt Enable**

43.8.14 AC97 Controller Status Register

Register Name: AC97C_SR

Address: 0xFFFAC050

Access Type: Read-only

31	30	29	28	27	26	25	24
–	–	–	–	–	–	–	–
23	22	21	20	19	18	17	16
–	–	–	–	–	–	–	–
15	14	13	12	11	10	9	8
–	–	–	–	–	–	–	–
7	6	5	4	3	2	1	0
–	–		CBEVT	CAEVT	COEVT	WKUP	SOF

WKUP and SOF flags in AC97C_SR register are automatically cleared by a processor read operation.

- **SOF: Start Of Frame**

0: No Start of Frame has been detected since the last read of the Status Register.

1: At least one Start of frame has been detected since the last read of the Status Register.

- **WKUP: Wake Up detection**

0: No Wake-up has been detected.

1: At least one rising edge on SDATA_IN has been asynchronously detected. That means AC97 Codec has notified a wake-up.

- **COEVT: CODEC Channel Event**

A Codec channel event occurs when AC97C_COSR AND AC97C_COMR is not 0. COEVT flag is automatically cleared when the channel event condition is cleared.

0: No event on the CODEC channel has been detected since the last read of the Status Register.

1: At least one event on the CODEC channel is active.

- **CAEVT: Channel A Event**

A channel A event occurs when AC97C_CASR AND AC97C_CAMR is not 0. CAEVT flag is automatically cleared when the channel event condition is cleared.

0: No event on the channel A has been detected since the last read of the Status Register.

1: At least one event on the channel A is active.

- **CBEVT: Channel B Event**

A channel B event occurs when AC97C_CBSR AND AC97C_CBMR is not 0. CBEVT flag is automatically cleared when the channel event condition is cleared.

0: No event on the channel B has been detected since the last read of the Status Register.

1: At least one event on the channel B is active.

43.8.15 AC97 Codec Controller Interrupt Enable Register

Register Name: AC97C_IER

Address: 0xFFFAC054

Access Type: Write-only

31	30	29	28	27	26	25	24
–	–	–	–	–	–	–	–
23	22	21	20	19	18	17	16
–	–	–	–	–	–	–	–
15	14	13	12	11	10	9	8
–	–	–	–	–	–	–	–
7	6	5	4	3	2	1	0
–	–		CBEVT	CAEVT	COEVT	WKUP	SOF

- **SOF: Start Of Frame**
- **WKUP: Wake Up**
- **COEVT: Codec Event**
- **CAEVT: Channel A Event**
- **CBEVT: Channel B Event**

0: No Effect.

1: Enables the corresponding interrupt.

43.8.16 AC97 Controller Interrupt Disable Register

Register Name: AC97C_IDR

Address: 0xFFFAC058

Access Type: Write-only

31	30	29	28	27	26	25	24
–	–	–	–	–	–	–	–
23	22	21	20	19	18	17	16
–	–	–	–	–	–	–	–
15	14	13	12	11	10	9	8
–	–	–	–	–	–	–	–
7	6	5	4	3	2	1	0
–	–		CBEVT	CAEVT	COEVT	WKUP	SOF

- **SOF: Start Of Frame**
- **WKUP: Wake Up**
- **COEVT: Codec Event**
- **CAEVT: Channel A Event**
- **CBEVT: Channel B Event**

0: No Effect.

1: Disables the corresponding interrupt.

43.8.17 AC97 Controller Interrupt Mask Register

Register Name: AC97C_IMR

Address: 0xFFFAC05C

Access Type: Read-only

31	30	29	28	27	26	25	24
–	–	–	–	–	–	–	–
23	22	21	20	19	18	17	16
–	–	–	–	–	–	–	–
15	14	13	12	11	10	9	8
–	–	–	–	–	–	–	–
7	6	5	4	3	2	1	0
–	–		CBEVT	CAEVT	COEVT	WKUP	SOF

- **SOF: Start Of Frame**
- **WKUP: Wake Up**
- **COEVT: Codec Event**
- **CAEVT: Channel A Event**
- **CBEVT: Channel B Event**

0: The corresponding interrupt is disabled.

1: The corresponding interrupt is enabled.

44. True Random Number Generator (TRNG)

44.1 Description

The True Random Number Generator (TRNG) passes the American *NIST Special Publication 800-22 and Diehard Random Tests Suites.*

As soon as the TRNG is enabled (TRNG_CTRL register), the generator provides one 32-bit value every 84 clock cycles. Interrupt trng_int can be enabled through the TRNG_IER register (respectively disabled in TRNG_IDR). This interrupt is set when a new random value is available and is cleared when the status register is read (TRNG_SR register). The flag DATRDY of the status register (TRNG_ISR) is set when the random data is ready to be read out on the 32-bit output data register (TRNG_ODATA).

The normal mode of operation checks that the status register flag equals 1 before reading the output data register when a 32-bit random value is required by the software application.

Figure 44-1. TRNG Data Generation Sequence

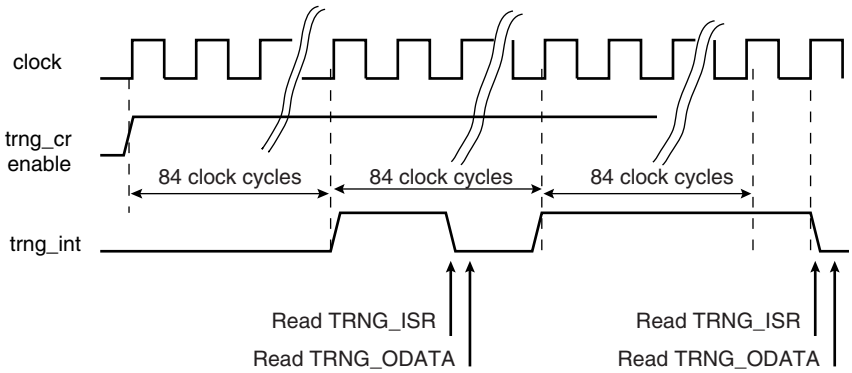

44.2 True Random Number Generator (TRNG) User Interface

Table 44-1. Register Mapping

Offset	Register	Name	Access	Reset
0x00	Control Register	TRNG_CR	Write-only	–
0x10	Interrupt Enable Register	TRNG_IER	Write-only	–
0x14	Interrupt Disable Register	TRNG_IDR	Write-only	–
0x18	Interrupt Mask Register	TRNG_IMR	Read-only	0x0000
0x1C	Interrupt Status Register	TRNG_ISR	Read-only	0x0000
0x50	Output Data Register	TRNG_ODATA	Read-only	0x0000

44.2.1 TRNG Control Register

Name: TRNG_CR

Address: 0xFFFCC000

Access: Write-only

31	30	29	28	27	26	25	24
KEY							

23	22	21	20	19	18	17	16
KEY							

15	14	13	12	11	10	9	8
KEY							

7	6	5	4	3	2	1	0
–	–	–	–	–	–	–	ENABLE

- **ENABLE: Enables the TRNG to provide random values**

0 = Disables the TRNG.

1 = Enables the TRNG.

- **KEY: Security Key**

KEY = 0x524e47 (RNG in ASCII).

This key is to be written when the ENABLE bit is set or cleared.

44.2.2 TRNG Interrupt Enable Register

Name: TRNG_IER

Address: 0xFFFCC010

Access: Write-only

31	30	29	28	27	26	25	24
–	–	–	–	–	–	–	–

23	22	21	20	19	18	17	16
–	–	–	–	–	–	–	–

15	14	13	12	11	10	9	8
–	–	–	–	–	–	–	–

7	6	5	4	3	2	1	0
–	–	–	–	–	–	–	DATRDY

- **DATRDY: Data Ready Interrupt Enable**

0 = No effect.

1 = Enables the corresponding interrupt.

44.2.3 TRNG Interrupt Disable Register

Name: TRNG_IDR

Address: 0xFFFCC014

Access: Write-only

31	30	29	28	27	26	25	24
–	–	–	–	–	–	–	–
23	22	21	20	19	18	17	16
–	–	–	–	–	–	–	–
15	14	13	12	11	10	9	8
–	–	–	–	–	–	–	–
7	6	5	4	3	2	1	0
–	–	–	–	–	–	–	DATRDY

- **DATRDY: Data Ready Interrupt Disable**

0 = No effect.

1 = Disables the corresponding interrupt.

44.2.4 TRNG Interrupt Mask Register

Name: TRNG_IMR

Address: 0xFFFCC018

Reset: 0x0000

Access: Read-only

31	30	29	28	27	26	25	24
–	–	–	–	–	–	–	–
23	22	21	20	19	18	17	16
–	–	–	–	–	–	–	–
15	14	13	12	11	10	9	8
–	–	–	–	–	–	–	–
7	6	5	4	3	2	1	0
–	–	–	–	–	–	–	DATRDY

- **DATRDY: Data Ready Interrupt Mask**

0 = The corresponding interrupt is not enabled.

1 = The corresponding interrupt is enabled.

44.2.5 TRNG Interrupt Status Register

Name: TRNG_ISR

Address: 0xFFFCC01C

Reset: 0x0000

Access: Read-only

31	30	29	28	27	26	25	24
–	–	–	–	–	–	–	–
23	22	21	20	19	18	17	16
–	–	–	–	–	–	–	–
15	14	13	12	11	10	9	8
		–	–	–	–	–	–
7	6	5	4	3	2	1	0
–	–	–	–	–	–	–	DATRDY

- **DATRDY: Data Ready**

0 = Output data is not valid or TRNG is disabled.

1 = New Random value is completed.

DATRDY is cleared when this register is read.

44.2.6 TRNG Output Data Register

Name: TRNG_ODATA

Address: 0xFFFCC050

Reset: 0x0000

Access: Read-only

31	30	29	28	27	26	25	24
ODATA							

23	22	21	20	19	18	17	16
ODATA							

15	14	13	12	11	10	9	8
ODATA							

7	6	5	4	3	2	1	0
ODATA							

- **ODATA: Output Data**

The 32-bit Output Data register contains the 32-bit random data.

45. LCD Controller (LCDC)

45.1 Description

The LCD Controller (LCDC) consists of logic for transferring LCD image data from an external display buffer to an LCD module with integrated common and segment drivers.

The LCD Controller supports single and double scan monochrome and color passive STN LCD modules and single scan active TFT LCD modules. On monochrome STN displays, up to 16 gray shades are supported using a time-based dithering algorithm and Frame Rate Control (FRC) method. This method is also used in color STN displays to generate up to 4096 colors.

The LCD Controller has a display input buffer (FIFO) to allow a flexible connection of the external AHB master interface, and a lookup table to allow palletized display configurations.

The LCD Controller is programmable in order to support many different requirements such as resolutions up to 2048 x 2048; pixel depth (1, 2, 4, 8, 16, 24 bits per pixel); data line width (4, 8, 16 or 24 bits) and interface timing.

The LCD Controller is connected to the ARM Advanced High Performance Bus (AHB) as a master for reading pixel data. However, the LCD Controller interfaces with the AHB as a slave in order to configure its registers.

45.2 Embedded Characteristics

- Single and Dual scan color and monochrome passive STN LCD panels supported
- Single scan active TFT LCD panels supported.
- 4-bit single scan, 8-bit single or dual scan, 16-bit dual scan STN interfaces supported
- Up to 24-bit single scan TFT interfaces supported
- Up to 16 gray levels for mono STN and up to 4096 colors for color STN displays
- 1, 2 bits per pixel (palletized), 4 bits per pixel (non-palletized) for mono STN
- 1, 2, 4, 8 bits per pixel (palletized), 16 bits per pixel (non-palletized) for color STN
- 1, 2, 4, 8 bits per pixel (palletized), 16, 24 bits per pixel (non-palletized) for TFT
- Single clock domain architecture
- Resolution supported up to 2048 x 2048

45.3 Block Diagram

Figure 45-1. LCD Macrocell Block Diagram

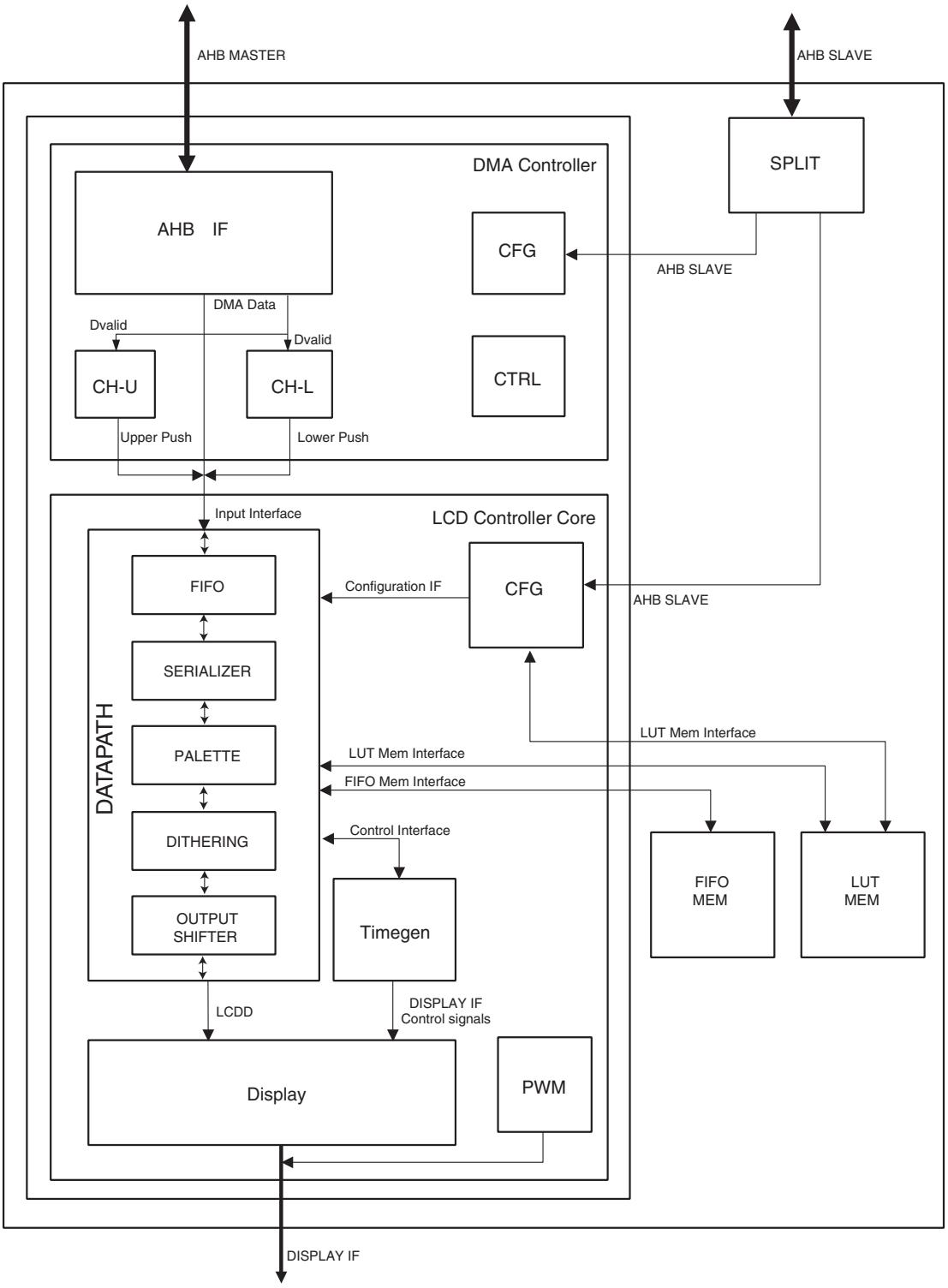

45.4 I/O Lines Description

Table 45-1. I/O Lines Description

Name	Description	Type
LCDCC	Contrast control signal	Output
LCDHSYNC	Line synchronous signal (STN) or Horizontal synchronous signal (TFT)	Output
LCDDOTCK	LCD clock signal (STN/TFT)	Output
LCDVSYNC	Frame synchronous signal (STN) or Vertical synchronization signal (TFT)	Output
LCDDEN	Data enable signal	Output
LCDMOD	LCD Modulation signal	Output
LCDPWR	LCD panel power enable control signal	Output
LCDD[23:0]	LCD Data Bus output	Output

45.5 Product Dependencies

45.5.1 I/O Lines

The pins used for interfacing the LCD Controller may be multiplexed with PIO lines. The programmer must first program the PIO Controller to assign the pins to their peripheral function. If I/O lines of the LCD Controller are not used by the application, they can be used for other purposes by the PIO Controller.

Table 45-2. I/O Lines

Instance	Signal	I/O Line	Peripheral
LCDC	LCDCC	PE2	A
LCDC	LCDDEN	PE6	A
LCDC	LCDDOTCK	PE5	A
LCDC	LCDD0	PE7	A
LCDC	LCDD1	PE8	A
LCDC	LCDD2	PE7	B
LCDC	LCDD2	PE9	A
LCDC	LCDD3	PE8	B
LCDC	LCDD3	PE10	A
LCDC	LCDD4	PE9	B
LCDC	LCDD4	PE11	A
LCDC	LCDD5	PE10	B
LCDC	LCDD5	PE12	A
LCDC	LCDD6	PE11	B
LCDC	LCDD6	PE13	A
LCDC	LCDD7	PE12	B
LCDC	LCDD7	PE14	A
LCDC	LCDD8	PE15	A
LCDC	LCDD9	PE16	A
LCDC	LCDD10	PE13	B

Table 45-2. I/O Lines (Continued)

LCDC	LCDD10	PE17	A
LCDC	LCDD11	PE14	B
LCDC	LCDD11	PE18	A
LCDC	LCDD12	PE15	B
LCDC	LCDD12	PE19	A
LCDC	LCDD13	PE16	B
LCDC	LCDD13	PE20	A
LCDC	LCDD14	PE17	B
LCDC	LCDD14	PE21	A
LCDC	LCDD15	PE18	B
LCDC	LCDD15	PE22	A
LCDC	LCDD16	PE23	A
LCDC	LCDD17	PE24	A
LCDC	LCDD18	PE19	B
LCDC	LCDD18	PE25	A
LCDC	LCDD19	PE20	B
LCDC	LCDD19	PE26	A
LCDC	LCDD20	PE21	B
LCDC	LCDD20	PE27	A
LCDC	LCDD21	PE22	B
LCDC	LCDD21	PE28	A
LCDC	LCDD22	PE23	B
LCDC	LCDD22	PE29	A
LCDC	LCDD23	PE24	B
LCDC	LCDD23	PE30	A
LCDC	LCDHSYNC	PE4	A
LCDC	LCDMOD	PE1	A
LCDC	LCDPWR	PE0	A
LCDC	LCDVSYNC	PE3	A

45.5.2 Power Management

The LCD Controller is not continuously clocked. The user must first enable the LCD Controller clock in the Power Management Controller before using it (PMC_PCER).

45.5.3 Interrupt Sources

The LCD Controller interrupt line is connected to one of the internal sources of the Advanced Interrupt Controller. Using the LCD Controller interrupt requires prior programming of the AIC.

Table 45-3. Peripheral IDs

Instance	ID
LCDC	23

45.6 Functional Description

The LCD Controller consists of two main blocks (Figure 45-1 on page 1052), the DMA controller and the LCD controller core (LCDC core). The DMA controller reads the display data from an external memory through a AHB master interface. The LCD controller core formats the display data. The LCD controller core continuously pumps the pixel data into the LCD module via the LCD data bus (LCDD[23:0]); this bus is timed by the LCDDOTCK, LCDDEN, LCDHSYNC, and LCDVSYNC signals.

45.6.1 DMA Controller

45.6.1.1 Configuration Block

The configuration block is a set of programmable registers that are used to configure the DMA controller operation. These registers are written via the AHB slave interface. Only word access is allowed.

For details on the configuration registers, see "LCD Controller (LCDC) User Interface" on page 1079.

45.6.1.2 AHB Interface

This block generates the AHB transactions. It generates undefined-length incrementing bursts as well as 4-, 8- or 16-beat incrementing bursts. The size of the transfer can be configured in the BRSTLN field of the DMAFRMCFG register. For details on this register, see "DMA Frame Configuration Register" on page 1084.

45.6.1.3 Channel-U

This block stores the base address and the number of words transferred for this channel (frame in single scan mode and Upper Panel in dual scan mode) since the beginning of the frame. It also generates the end of frame signal.

It has two pointers, the base address and the number of words to transfer. When the module receives a new_frame signal, it reloads the number of words to transfer pointer with the size of the frame/panel. When the module receives the new_frame signal, it also reloads the base address with the base address programmed by the host.

The size of the frame/panel can be programmed in the FRMSIZE field of the DMAFRMCFG Register. This size is calculated as follows:

$$\text{Frame_size} = \left\lceil \frac{\text{X_size*Y_size}}{32} \right\rceil$$

where:

X_size = ((LINESIZE+1)*Bpp+PIXELOFF)/32

Y_size = (LINEVAL+1)

- LINESIZE is the horizontal size of the display in pixels, minus 1, as programmed in the LINESIZE field of the LCDFRMCFG register of the LCD Controller.
- Bpp is the number of bits per pixel configured.
- PIXELOFF is the pixel offset for 2D addressing, as programmed in the DMA2DCFG register. Applicable only if 2D addressing is being used.

- LINEVAL is the vertical size of the display in pixels, minus 1, as programmed in the LINEVAL field of the LCDFRMCFG register of the LCD Controller.

Note: X_size is calculated as an up-rounding of a division by 32. (This can also be done adding 31 to the dividend before using an integer division by 32). When using the 2D-addressing mode (see "2D Memory Addressing" on page 1077), it is important to note that the above calculation must be executed and the FRMSIZE field programmed with every movement of the displaying window, since a change in the PIXELOFF field can change the resulting FRMSIZE value.

45.6.1.4 Channel-L

This block has the same functionality as Channel-U, but for the Lower Panel in dual scan mode only.

45.6.1.5 Control

This block receives the request signals from the LCDC core and generates the requests for the channels.

45.6.2 LCD Controller Core

45.6.2.1 Configuration Block

The configuration block is a set of programmable registers that are used to configure the LCDC core operation. These registers are written via the AHB slave interface. Only word access is allowed.

The description of the configuration registers can be found in "LCD Controller (LCDC) User Interface" on page 1079.

45.6.2.2 Datapath

The datapath block contains five submodules: FIFO, Serializer, Palette, Dithering and Shifter. The structure of the datapath is shown in Figure 45-2.

Figure 45-2. Datapath Structure

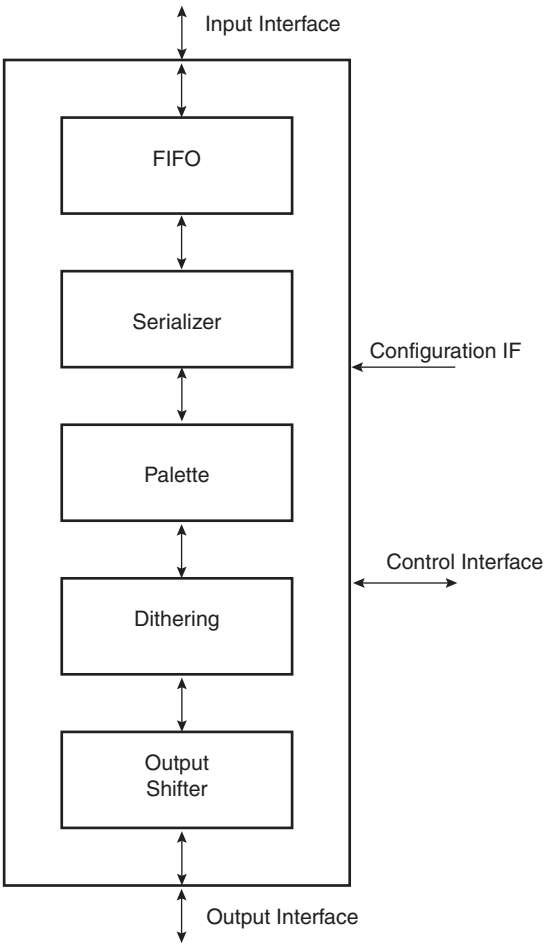

This module transforms the data read from the memory into a format according to the LCD module used. It has four different interfaces: the input interface, the output interface, the configuration interface and the control interface.

- The input interface connects the datapath with the DMA controller. It is a dual FIFO interface with a data bus and two push lines that are used by the DMA controller to fill the FIFOs.
- The output interface is a 24-bit data bus. The configuration of this interface depends on the type of LCD used (TFT or STN, Single or Dual Scan, 4-bit, 8-bit, 16-bit or 24-bit interface).
- The configuration interface connects the datapath with the configuration block. It is used to select between the different datapath configurations.
- The control interface connects the datapath with the timing generation block. The main control signal is the data-request signal, used by the timing generation module to request new data from the datapath.

The datapath can be characterized by two parameters: initial_latency and cycles_per_data. The parameter initial_latency is defined as the number of LCDC Core Clock cycles until the first data is available at the output of the datapath. The parameter cycles_per_data is the minimum number of LCDC Core clock cycles between two consecutive data at the output interface.

These parameters are different for the different configurations of the LCD Controller and are shown in Table 45-4.

Table 45-4. Datapath Parameters

Configuration				
DISTYPE	**SCAN**	**IFWIDTH**	**initial_latency**	**cycles_per_data**
TFT			9	1
STN Mono	Single	4	13	4
STN Mono	Single	8	17	8
STN Mono	Dual	8	17	8
STN Mono	Dual	16	25	16
STN Color	Single	4	11	2
STN Color	Single	8	12	3
STN Color	Dual	8	14	4
STN Color	Dual	16	15	6

45.6.2.3 FIFO

The FIFO block buffers the input data read by the DMA module. It contains two input FIFOs to be used in Dual Scan configuration that are configured as a single FIFO when used in single scan configuration.

The size of the FIFOs allows a wide range of architectures to be supported.

The upper threshold of the FIFOs can be configured in the FIFOTH field of the LCDFIFO register. The LCDC core will request a DMA transfer when the number of words in each FIFO is less than FIFOTH words. To avoid overwriting in the FIFO and to maximize the FIFO utilization, the FIFOTH should be programmed with:

FIFOTH (in Words) = 512 - (2 x DMA_BURST_LENGTH + 3)

where:

- 512 is the effective size of the FIFO in Words. It is the total FIFO memory size in single scan mode and half that size in dual scan mode.
- DMA_burst_length is the burst length of the transfers made by the DMA in Words.

45.6.2.4 Serializer

This block serializes the data read from memory. It reads words from the FIFO and outputs pixels (1 bit, 2 bits, 4 bits, 8 bits, 16 bits or 24 bits wide) depending on the format specified in the PIXELSIZE field of the LCDCON2 register. It also adapts the memory-ordering format. Both big-endian and little-endian formats are supported. They are configured in the MEMOR field of the LCDCON2 register.

The organization of the pixel data in the memory depends on the configuration and is shown in Table 45-5 and Table 45-7.

Note: For a color depth of 24 bits per pixel there are two different formats supported: packed and unpacked. The packed format needs less memory but has some limitations when working in 2D addressing mode (See “2D Memory Addressing” on page 1077.).

Table 45-6. Little Endian Memory Organization

Mem Addr	0x3								0x2								0x1								0x0							
Bit	31	30	29	28	27	26	25	24	23	22	21	20	19	18	17	16	15	14	13	12	11	10	9	8	7	6	5	4	3	2	1	0
Pixel 1bpp	31	30	29	28	27	26	25	24	23	22	21	20	19	18	17	16	15	14	13	12	11	10	9	8	7	6	5	4	3	2	1	0
Pixel 2bpp	15		14		13		12		11		10		9		8		7		6		5		4		3		2		1		0	
Pixel 4bpp	7				6				5				4				3				2				1				0			
Pixel 8bpp	3								2								1								0							
Pixel 16bpp	1																0															
Pixel 24bpp packed	1								0																							
Pixel 24bpp packed	2																1															
Pixel 24bpp packed	3																								2							
Pixel 24bpp unpacked	not used								0																							

Table 45-7. Big Endian Memory Organization

Mem Addr	0x3								0x2								0x1								0x0							
Bit	31	30	29	28	27	26	25	24	23	22	21	20	19	18	17	16	15	14	13	12	11	10	9	8	7	6	5	4	3	2	1	0
Pixel 1bpp	0	1	2	3	4	5	6	7	8	9	10	11	12	13	14	15	16	17	18	19	20	21	22	23	24	25	26	27	28	29	30	31
Pixel 2bpp	0		1		2		3		4		5		6		7		8		9		10		11		12		13		14		15	
Pixel 4bpp	0				1				2				3				4				5				6				7			
Pixel 8bpp	0								1								2								3							
Pixel 16bpp	0																1															
Pixel 24bpp packed	0																								1							
Pixel 24bpp packed	1																2															

Table 45-7. Big Endian Memory Organization (Continued)

Mem Addr	0x3	0x2	0x1	0x0
Pixel 24bpp packed	2	3		
Pixel 24bpp packed	4			5
Pixel 24bpp unpacked	not used	0		

Table 45-8. WinCE Pixel Memory Organization

Mem Addr	0x3								0x2								0x1								0x0							
Bit	31	30	29	28	27	26	25	24	23	22	21	20	19	18	17	16	15	14	13	12	11	10	9	8	7	6	5	4	3	2	1	0
Pixel 1bpp	24	25	26	27	28	29	30	31	16	17	18	19	20	21	22	23	8	9	10	11	12	13	14	15	0	1	2	3	4	5	6	7
Pixel 2bpp	12		13		14		15		8		9		10		11		4		5		6		7		0		1		3		3	
Pixel 4bpp	6				7				4				5				2				3				0				1			
Pixel 8bpp	3								2								1								0							
Pixel 16bpp	1																0															
Pixel 24bpp packed	1								0																							
Pixel 24bpp packed	2																1															
Pixel 24bpp packed	3																								2							
Pixel 24bpp unpacked	not used								0																							

45.6.2.5 Palette

This block is used to generate the pixel gray or color information in palletized configurations. The different modes with the palletized/non-palletized configuration can be found in Table 45-9. In these modes, 1, 2, 4 or 8 input bits index an entry in the lookup table. The corresponding entry in the lookup table contains the color or gray shade information for the pixel.

Table 45-9. Palette Configurations

Configuration		Palette
DISTYPE	**PIXELSIZE**	
TFT	1, 2, 4, 8	Palletized
TFT	16, 24	Non-palletized
STN Mono	1, 2	Palletized

Table 45-9. Palette Configurations (Continued)

Configuration		Palette
DISTYPE	**PIXELSIZE**	
STN Mono	4	Non-palletized
STN Color	1, 2, 4, 8	Palletized
STN Color	16	Non-palletized

The lookup table can be accessed by the host in R/W mode to allow the host to program and check the values stored in the palette. It is mapped in the LCD controller configuration memory map. The LUT is mapped as 16-bit half-words aligned at word boundaries, only word write access is allowed (the 16 MSB of the bus are not used). For the detailed memory map, see Table 45-16 on page 1079.

The lookup table contains 256 16-bit wide entries. The 256 entries are chosen by the programmer from the 2^{16} possible combinations.

For the structure of each LUT entry, see Table 45-10.

Table 45-10. Lookup Table Structure in the Memory

Address	Data Output [15:0]		
00	Red_value_0[4:0]	Green_value_0[5:0]	Blue_value_0[4:0]
01	Red_value_1[4:0]	Green_value_1[5:0]	Blue_value_1[4:0]
...			
FE	Red_value_254[4:0]	Green_value_254[5:0]	Blue_value_254[4:0]
FF	Red_value_255[4:0]	Green_value_255[5:0]	Blue_value_255[4:0]

In STN Monochrome, only the four most significant bits of the red value are used (16 gray shades). In STN Color, only the four most significant bits of the blue, green and red value are used (4096 colors).

In TFT mode, all the bits in the blue, green and red values are used. The LCDD unused bits are tied to 0 when TFT palletized configurations are used (LCDD[18:16], LCDD[9:8], LCDD[2:0]).

45.6.2.6 Dithering

The dithering block is used to generate the shades of gray or color when the LCD Controller is used with an STN LCD Module. It uses a time-based dithering algorithm and Frame Rate Control method.

The Frame Rate Control varies the duty cycle for which a given pixel is turned on, giving the display an appearance of multiple shades. In order to reduce the flicker noise caused by turning on and off adjacent pixels at the same time, a time-based dithering algorithm is used to vary the pattern of adjacent pixels every frame. This algorithm is expressed in terms of Dithering Pattern registers (DP_i) and considers not only the pixel gray level number, but also its horizontal coordinate.

Table 45-11 shows the correspondences between the gray levels and the duty cycle.

Table 45-11. Dithering Duty Cycle

Gray Level	Duty Cycle	Pattern Register
15	1	-
14	6/7	DP6_7
13	4/5	DP4_5
12	3/4	DP3_4

Table 45-11. Dithering Duty Cycle (Continued)

Gray Level	Duty Cycle	Pattern Register
11	5/7	DP5_7
10	2/3	DP2_3
9	3/5	DP3_5
8	4/7	DP4_7
7	1/2	~DP1_2
6	3/7	~DP4_7
5	2/5	~DP3_5
4	1/3	~DP2_3
3	1/4	~DP3_4
2	1/5	~DP4_5
1	1/7	~DP6_7
0	0	-

The duty cycles for gray levels 0 and 15 are 0 and 1, respectively.

The same DP_i register can be used for the pairs for which the sum of duty cycles is 1 (e.g., 1/7 and 6/7). The dithering pattern for the first pair member is the inversion of the one for the second.

The DP_i registers contain a series of 4-bit patterns. The $(3\text{-}m)^{th}$ bit of the pattern determines if a pixel with horizontal coordinate x = 4n + m (n is an integer and m ranges from 0 to 3) should be turned on or off in the current frame. The operation is shown by the examples below.

Consider the pixels a, b, c and d with the horizontal coordinates 4*n+0, 4*n+1, 4*n+2 and 4*n+3, respectively. The four pixels should be displayed in gray level 9 (duty cycle 3/5) so the register used is DP3_5 =”1010 0101 1010 0101 1111”.

The output sequence obtained in the data output for monochrome mode is shown in Table 45-12.

Table 45-12. Dithering Algorithm for Monochrome Mode

Frame Number	Pattern	Pixel a	Pixel b	Pixel c	Pixel d
N	1010	ON	OFF	ON	OFF
N+1	0101	OFF	ON	OFF	ON
N+2	1010	ON	OFF	ON	OFF
N+3	0101	OFF	ON	OFF	ON
N+4	1111	ON	ON	ON	ON
N+5	1010	ON	OFF	ON	OFF
N+6	0101	OFF	ON	OFF	ON
N+7	1010	ON	OFF	ON	OFF
...	...	...	...	...	...

Consider now color display mode and two pixels p0 and p1 with the horizontal coordinates 4*n+0, and 4*n+1. A color pixel is composed of three components: {R, G, B}. Pixel p0 will be displayed sending the color components {R0, G0, B0} to the display. Pixel p1 will be displayed sending the color components {R1, G1, B1}. Suppose that

the data read from memory and mapped to the lookup tables corresponds to shade level 10 for the three color components of both pixels, with the dithering pattern to apply to all of them being DP2_3 = “1101 1011 0110”. Table 45-13 shows the output sequence in the data output bus for single scan configurations. (In Dual Scan Configuration, each panel data bus acts like in the equivalent single scan configuration.)

Table 45-13. Dithering Algorithm for Color Mode

Frame	Signal	Shadow Level	Bit used	Dithering Pattern	4-bit LCDD	8-bit LCDD	Output
N	red_data_0	1010	3	1101	LCDD[3]	LCDD[7]	R0
N	green_data_0	1010	2	1101	LCDD[2]	LCDD[6]	G0
N	blue_data_0	1010	1	1101	LCDD[1]	LCDD[5]	b0
N	red_data_1	1010	0	1101	LCDD[0]	LCDD[4]	R1
N	green_data_1	1010	3	1101	LCDD[3]	LCDD[3]	G1
N	blue_data_1	1010	2	1101	LCDD[2]	LCDD[2]	B1
…	…	…	…	…	…	…	…
N+1	red_data_0	1010	3	1011	LCDD[3]	LCDD[7]	R0
N+1	green_data_0	1010	2	1011	LCDD[2]	LCDD[6]	g0
N+1	blue_data_0	1010	1	1011	LCDD[1]	LCDD[5]	B0
N+1	red_data_1	1010	0	1011	LCDD[0]	LCDD[4]	R1
N+1	green_data_1	1010	3	1011	LCDD[3]	LCDD[3]	G1
N+1	blue_data_1	1010	2	1011	LCDD[2]	LCDD[2]	b1
…	…	…	…	…	…	…	…
N+2	red_data_0	1010	3	0110	LCDD[3]	LCDD[7]	r0
N+2	green_data_0	1010	2	0110	LCDD[2]	LCDD[6]	G0
N+2	blue_data_0	1010	1	0110	LCDD[1]	LCDD[5]	B0
N+2	red_data_1	1010	0	0110	LCDD[0]	LCDD[4]	r1
N+2	green_data_1	1010	3	0110	LCDD[3]	LCDD[3]	g1
N+2	blue_data_1	1010	2	0110	LCDD[2]	LCDD[2]	B1
…	…	…	…	…	…	…	…

Note: Ri = red pixel component ON. Gi = green pixel component ON. Bi = blue pixel component ON. ri = red pixel component OFF. gi = green pixel component OFF. bi = blue pixel component OFF.

45.6.2.7 Shifter

The FIFO, Serializer, Palette and Dithering modules process one pixel at a time in monochrome mode and three sub-pixels at a time in color mode (R,G,B components). This module packs the data according to the output interface. This interface can be programmed in the DISTYPE, SCANMOD, and IFWIDTH fields of the LDCCON3 register.

The DISTYPE field selects between TFT, STN monochrome and STN color display. The SCANMODE field selects between single and dual scan modes; in TFT mode, only single scan is supported. The IFWIDTH field configures the width of the interface in STN mode: 4-bit (in single scan mode only), 8-bit and 16-bit (in dual scan mode only).

For a more detailed description of the fields, see “LCD Controller (LCDC) User Interface” on page 1079.

For a more detailed description of the LCD Interface, see “LCD Interface” on page 1069.

45.6.2.8 Timegen

The time generator block generates the control signals LCDDOTCK, LCDHSYNC, LCDVSYNC, LCDDEN, and LCDMOD, used by the LCD module. This block is programmable in order to support different types of LCD modules and obtain the output clock signals, which are derived from the LCDC Core clock.

The LCDMOD signal provides an AC signal for the display. It is used by the LCD to alternate the polarity of the row and column voltages used to turn the pixels on and off. This prevents the liquid crystal from degradation. It can be configured to toggle every frame (bit MMODE = 0 in LCDMVAL register) or to toggle every programmable number of LCDHSYNC pulses (bit MMODE = 1, number of pulses defined in MVAL field of LCDMVAL register).

$$f_{LCD_MOD} = \frac{f_{LCD_HSYNC}}{2 \times (MVAL + 1)}$$

Figure 45-3 and Figure 45-4 on page 1064 show the timing of LCDMOD in both configurations.

Figure 45-3. Full Frame Timing, MMODE=1, MVAL=1

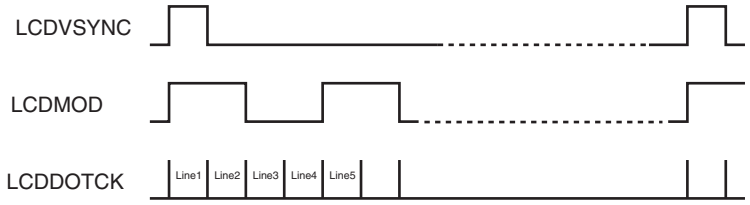

Figure 45-4. Full Frame Timing, MMODE=0

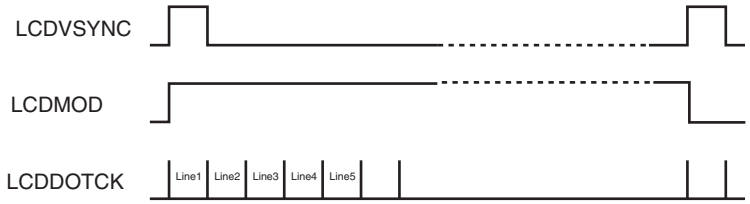

The LCDDOTCK signal is used to clock the data into the LCD drivers' shift register. The data is sent through LCDD[23:0] synchronized by default with LCDDOTCK falling edge (rising edge can be selected). The CLKVAL field of LCDCON1 register controls the rate of this signal. The divisor can also be bypassed with the BYPASS bit in the LCDCON1 register. In this case, the rate of LCDDOTCK is equal to the frequency of the LCDC Core clock. The minimum period of the LCDDOTCK signal depends on the configuration. This information can be found in Table 45-14.

$$f_{LCDDOTCK} = \frac{f_{LCDC_clock}}{CLKVAL + 1}$$

The LCDDOTCK signal has two different timings that are selected with the CLKMOD field of the LCDCON2 register:

- Always Active (used with TFT LCD Modules)
- Active only when data is available (used with STN LCD Modules)

Table 45-14. Minimum LCDDOTCK Period in LCDC Core Clock Cycles

Configuration			
DISTYPE	**SCAN**	**IFWIDTH**	**LCDDOTCK Period**
TFT			1
STN Mono	Single	4	4
STN Mono	Single	8	8
STN Mono	Dual	8	8
STN Mono	Dual	16	16
STN Color	Single	4	2
STN Color	Single	8	2
STN Color	Dual	8	4
STN Color	Dual	16	6

The LCDDEN signal indicates valid data in the LCD Interface.

After each horizontal line of data has been shifted into the LCD, the LCDHSYNC is asserted to cause the line to be displayed on the panel.

The following timing parameters can be configured:

- Vertical to Horizontal Delay (VHDLY): The delay between the falling edge of LCDVSYNC and the generation of LCDHSYNC is configurable in the VHDLY field of the LCDTIM1 register. The delay is equal to (VHDLY+1) LCDDOTCK cycles.
- Horizontal Pulse Width (HPW): The LCDHSYNC pulse width is configurable in HPW field of LCDTIM2 register. The width is equal to (HPW + 1) LCDDOTCK cycles.
- Horizontal Back Porch (HBP): The delay between the LCDHSYNC falling edge and the first LCDDOTCK rising edge with valid data at the LCD Interface is configurable in the HBP field of the LCDTIM2 register. The delay is equal to (HBP+1) LCDDOTCK cycles.
- Horizontal Front Porch (HFP): The delay between end of valid data and the generation of the next LCDHSYNC is configurable in the HFP field of the LCDTIM2 register. The delay is equal to (HFP+VHDLY+2) LCDDOTCK cycles.

There is a limitation in the minimum values of VHDLY, HPW and HBP parameters imposed by the initial latency of the datapath. The total delay in LCDC clock cycles must be higher than or equal to the latency column in Table 45-4 on page 1058. This limitation is given by the following formula:

45.6.2.9 Equation 1

$$(\mathrm{VHDLY} + \mathrm{HPW} + \mathrm{HBP} + 3) \times \mathrm{PCLK_PERIOD} \geq \mathrm{DPATH_LATENCY}$$

where:

- VHDLY, HPW, HBP are the value of the fields of LCDTIM1 and LCDTIM2 registers
- PCLK_PERIOD is the period of LCDDOTCK signal measured in LCDC Clock cycles
- DPATH_LATENCY is the datapath latency of the configuration, given in Table 45-4 on page 1058

The LCDVSYNC is asserted once per frame. This signal is asserted to cause the LCD's line pointer to start over at the top of the display. The timing of this signal depends on the type of LCD: STN or TFT LCD.

In STN mode, the high phase corresponds to the complete first line of the frame. In STN mode, this signal is synchronized with the first active LCDDOTCK rising edge in a line.

In TFT mode, the high phase of this signal starts at the beginning of the first line. The following timing parameters can be selected:

- Vertical Pulse Width (VPW): LCDVSYNC pulse width is configurable in VPW field of the LCDTIM1 register. The pulse width is equal to (VPW+1) lines.
- Vertical Back Porch: Number of inactive lines at the beginning of the frame is configurable in VBP field of LCDTIM1 register. The number of inactive lines is equal to VBP. This field should be programmed with 0 in STN Mode.
- Vertical Front Porch: Number of inactive lines at the end of the frame is configurable in VFP field of LCDTIM2 register. The number of inactive lines is equal to VFP. This field should be programmed with 0 in STN mode.

There are two other parameters to configure in this module, the HOZVAL and the LINEVAL fields of the LCDFRMCFG:

- HOZVAL configures the number of active LCDDOTCK cycles in each line. The number of active cycles in each line is equal to (HOZVAL+1) cycles. The minimum value of this parameter is 1.
- LINEVAL configures the number of active lines per frame. This number is equal to (LINEVAL+1) lines. The minimum value of this parameter is 1.

Figure 45-5, Figure 45-6 and Figure 45-7 show the timing of LCDDOTCK, LCDDEN, LCDHSYNC and LCDVSYNC signals:

Figure 45-5. STN Panel Timing, CLKMOD 0

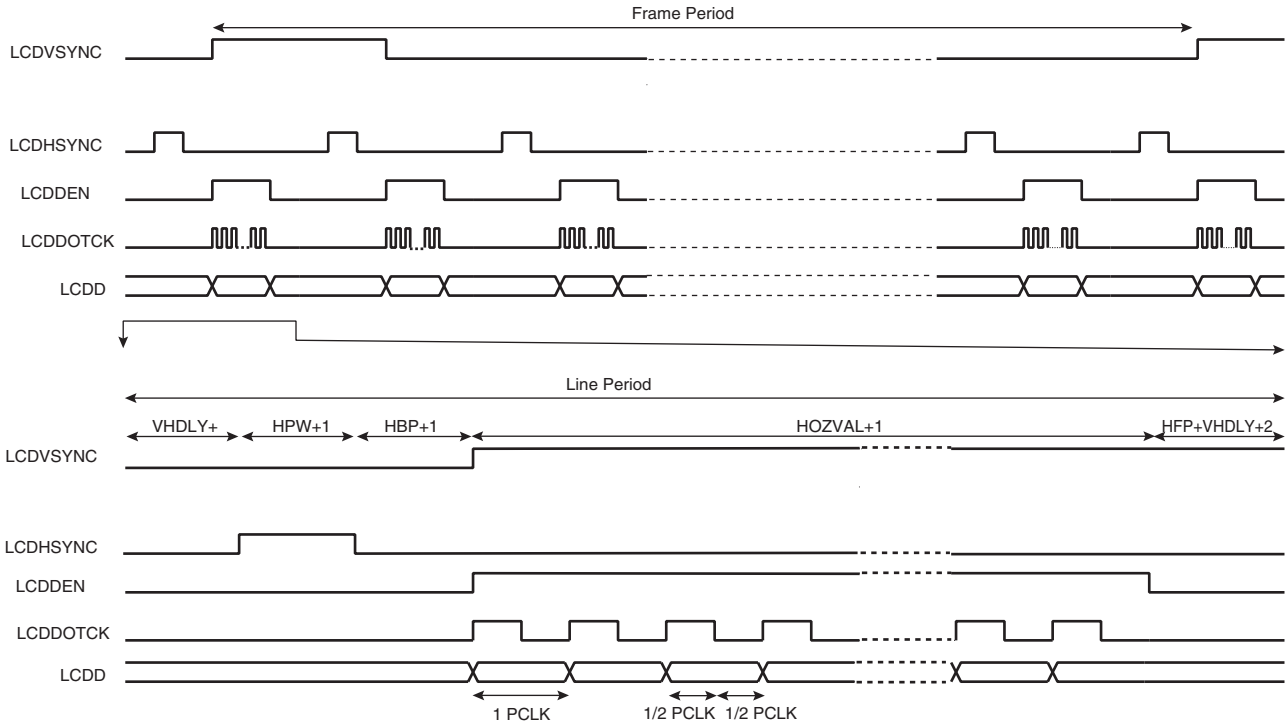

Figure 45-6. TFT Panel Timing, CLKMOD = 0, VPW = 2, VBP = 2, VFP = 1

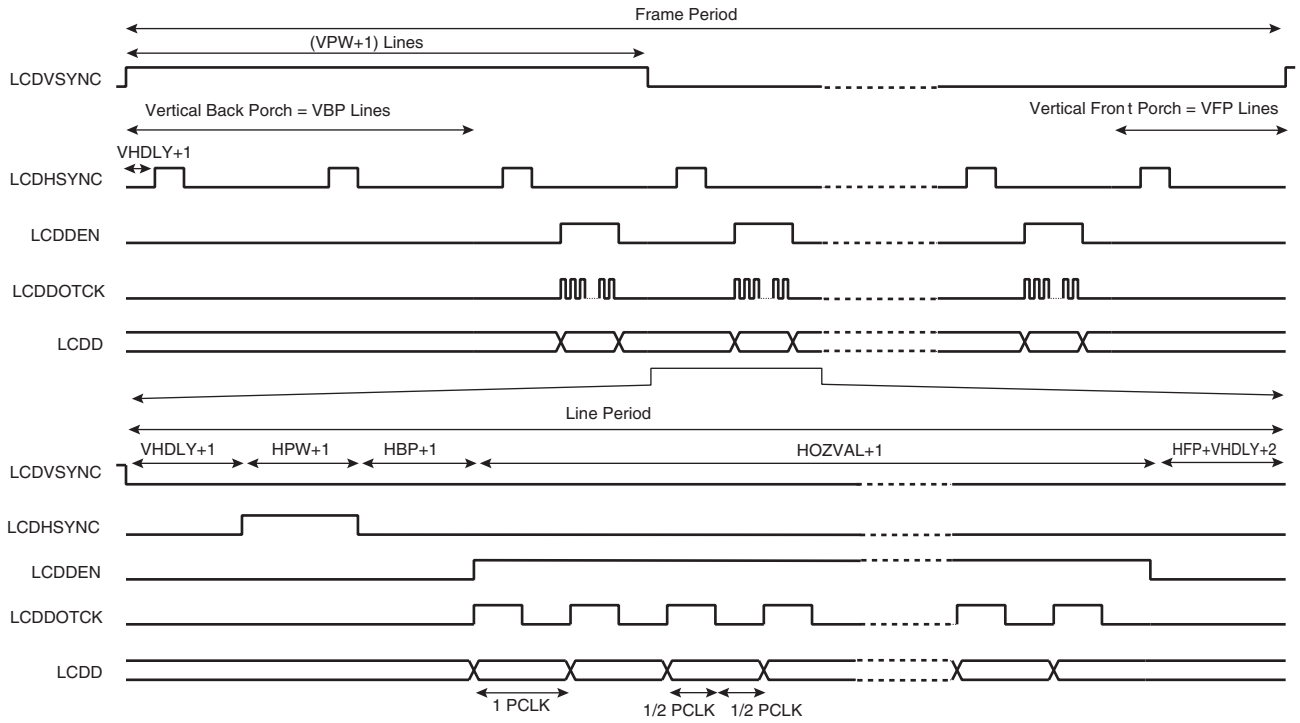

Figure 45-7. TFT Panel Timing (Line Expanded View), CLKMOD = 1

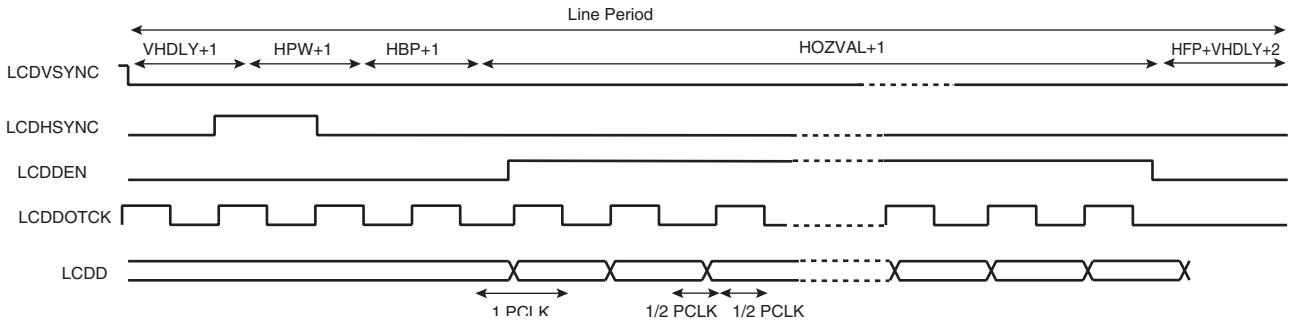

Usually the LCD_FRM rate is about 70 Hz to 75 Hz. It is given by the following equation:

$$\frac{1}{f_{LCDVSYNC}} = \left(\frac{VHDLY + HPW + HBP + HOZVAL + HFP + (4)}{f_{LCDDOTCK}}\right)(VBP + LINEVAL + VFP + 1)$$

where:

- HOZVAL determines de number of LCDDOTCK cycles per line
- LINEVAL determines the number of LCDHSYNC cycles per frame, according to the expressions shown below:

In STN Mode:

$$HOZVAL = \frac{Horizontal_display_size}{Number_data_lines} - 1$$

$$LINEVAL = Vertical_display_size - 1$$

In monochrome mode, Horizontal_display_size is equal to the number of horizontal pixels. The number_data_lines is equal to the number of bits of the interface in single scan mode; number_data_lines is equal to half the bits of the interface in dual scan mode.

In color mode, Horizontal_display_size equals three times the number of horizontal pixels.

In TFT Mode:

$$\text{HOZVAL} = \text{Horizontal_display_size} - 1$$

$$\text{LINEVAL} = \text{Vertical_display_size} - 1$$

The frame rate equation is used first without considering the clock periods added at the end beginning or at the end of each line to determine, approximately, the LCDDOTCK rate:

$$f_{lcd_pclk} = (\text{HOZVAL} + 5) \times (f_{lcd_vsync} \times (\text{LINEVAL} + 1))$$

With this value, the CLKVAL is fixed, as well as the corresponding LCDDOTCK rate.

Then select VHDLY, HPW and HBP according to the type of LCD used and "Equation 1" on page 1065.

Finally, the frame rate is adjusted to 70 Hz - 75 Hz with the HFP value:

$$\text{HFP} = f_{\text{LCDDOTCK}} \times \left[\frac{1}{f_{\text{LCDVSYNC}} \times (\text{LINEVAL} + \text{VBP} + \text{VFP} + 1)}\right] - (\text{VHDLY} + \text{HPW} + \text{HPB} + \text{HOZVAL} + 4)$$

The line counting is controlled by the read-only field LINECNT of LCDCON1 register. The LINECNT field decreases by one unit at each falling edge of LCDHSYNC.

45.6.2.10 Display

This block is used to configure the polarity of the data and control signals. The polarity of all clock signals can be configured by LCDCON2[12:8] register setting.

This block also generates the lcd_pwr signal internally used to control the state of the LCD pins and to turn on and off by software the LCD module.

It is also available on the LCDPWR pin.

This signal is controlled by the PWRCON register and respects the number of frames configured in the GUARD_TIME field of PWRCON register (PWRCON[7:1]) between the write access to LCD_PWR field (PWRCON[0]) and the activation/deactivation of lcd_pwr signal.

The minimum value for the GUARD_TIME field is one frame. This gives the DMA Controller enough time to fill the FIFOs before the start of data transfer to the LCD.

45.6.2.11 PWM

This block generates the LCD contrast control signal (LCDCC) to make possible the control of the display's contrast by software. This is an 8-bit PWM (Pulse Width Modulation) signal that can be converted to an analog voltage with a simple passive filter.

The PWM module has a free-running counter whose value is compared against a compare register (CONSTRAST_VAL register). If the value in the counter is less than that in the register, the output brings the value of the polarity (POL) bit in the PWM control register: CONTRAST_CTR. Otherwise, the opposite value is output. Thus, a periodic waveform with a pulse width proportional to the value in the compare register is generated.

Due to the comparison mechanism, the output pulse has a width between zero and 255 PWM counter cycles. Thus by adding a simple passive filter outside the chip, an analog voltage between 0 and (255/256) × VDD can be

obtained (for the positive polarity case, or between (1/256) × VDD and VDD for the negative polarity case). Other voltage values can be obtained by adding active external circuitry.

For PWM mode, the frequency of the counter can be adjusted to four different values using field PS of CONTRAST_CTR register.

45.6.3 LCD Interface

The LCD Controller interfaces with the LCD Module through the LCD Interface (Table 45-15 on page 1074). The Controller supports the following interface configurations: 24-bit TFT single scan, 16-bit STN Dual Scan Mono (Color), 8-bit STN Dual (Single) Scan Mono (Color), 4-bit single scan Mono (Color).

A 4-bit single scan STN display uses 4 parallel data lines to shift data to successive single horizontal lines one at a time until the entire frame has been shifted and transferred. The 4 LSB pins of LCD Data Bus (LCDD [3:0]) can be directly connected to the LCD driver; the 20 MSB pins (LCDD [23:4]) are not used.

An 8-bit single scan STN display uses 8 parallel data lines to shift data to successive single horizontal lines one at a time until the entire frame has been shifted and transferred. The 8 LSB pins of LCD Data Bus (LCDD [7:0]) can be directly connected to the LCD driver; the 16 MSB pins (LCDD [23:8]) are not used.

An 8-bit Dual Scan STN display uses two sets of 4 parallel data lines to shift data to successive upper and lower panel horizontal lines one at a time until the entire frame has been shifted and transferred. The bus LCDD[3:0] is connected to the upper panel data lines and the bus LCDD[7:4] is connected to the lower panel data lines. The rest of the LCD Data Bus lines (LCDD[23:8]) are not used.

A 16-bit Dual Scan STN display uses two sets of 8 parallel data lines to shift data to successive upper and lower panel horizontal lines one at a time until the entire frame has been shifted and transferred. The bus LCDD[7:0] is connected to the upper panel data lines and the bus LCDD[15:8] is connected to the lower panel data lines. The rest of the LCD Data Bus lines (LCDD[23:16]) are not used.

STN Mono displays require one bit of image data per pixel. STN Color displays require three bits (Red, Green and Blue) of image data per pixel, resulting in a horizontal shift register of length three times the number of pixels per horizontal line. This RGB or Monochrome data is shifted to the LCD driver as consecutive bits via the parallel data lines.

A TFT single scan display uses up to 24 parallel data lines to shift data to successive horizontal lines one at a time until the entire frame has been shifted and transferred. The 24 data lines are divided in three bytes that define the color shade of each color component of each pixel. The LCDD bus is split as LCDD[23:16] for the blue component, LCDD[15:8] for the green component and LCDD[7:0] for the red component. If the LCD Module has lower color resolution (fewer bits per color component), only the most significant bits of each component are used.

All these interfaces are shown in Figure 45-8 to Figure 45-12. Figure 45-8 on page 1070 shows the 24-bit single scan TFT display timing; Figure 45-9 on page 1070 shows the 4-bit single scan STN display timing for monochrome and color modes; Figure 45-10 on page 1071 shows the 8-bit single scan STN display timing for monochrome and color modes; Figure 45-11 on page 1072 shows the 8-bit Dual Scan STN display timing for monochrome and color modes; Figure 45-12 on page 1073 shows the 16-bit Dual Scan STN display timing for monochrome and color modes.

Figure 45-8. TFT Timing (First Line Expanded View)

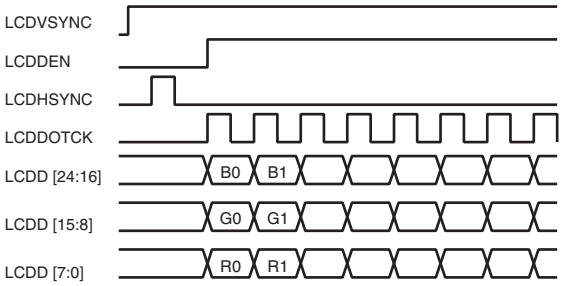

Figure 45-9. Single Scan Monochrome and Color 4-bit Panel Timing (First Line Expanded View)

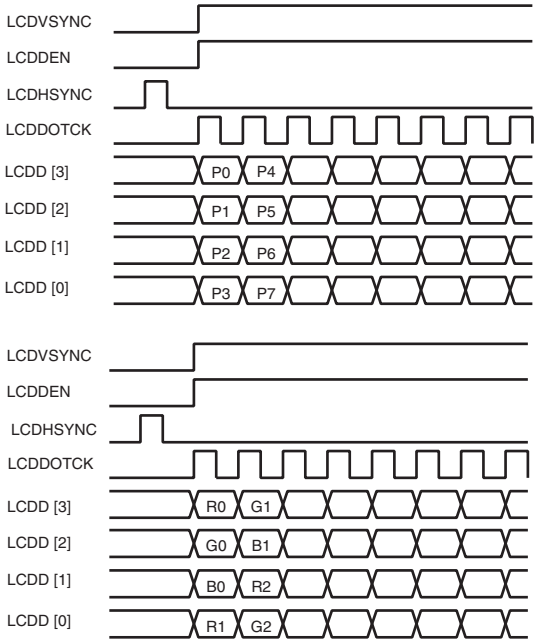

Figure 45-10. Single Scan Monochrome and Color 8-bit Panel Timing (First Line Expanded View)

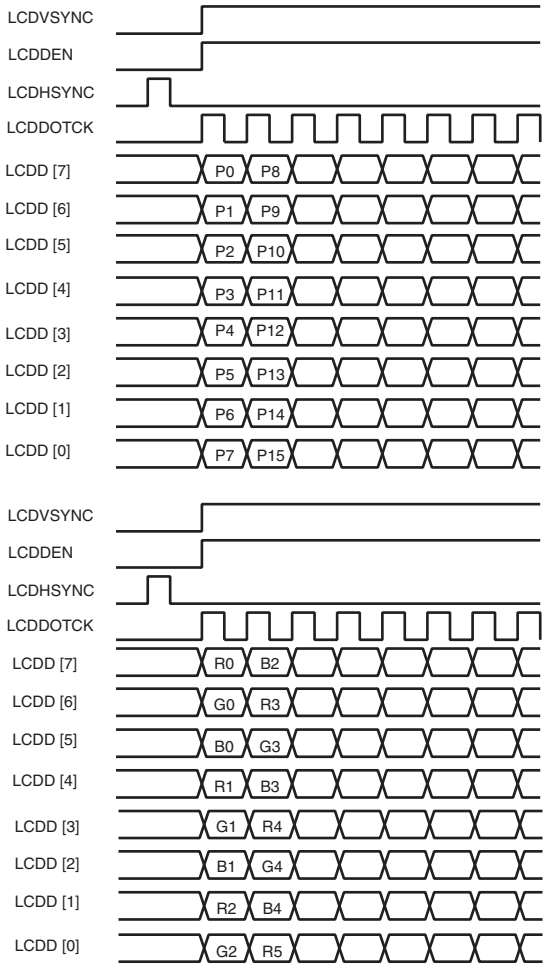

Figure 45-11. Dual Scan Monochrome and Color 8-bit Panel Timing (First Line Expanded View)

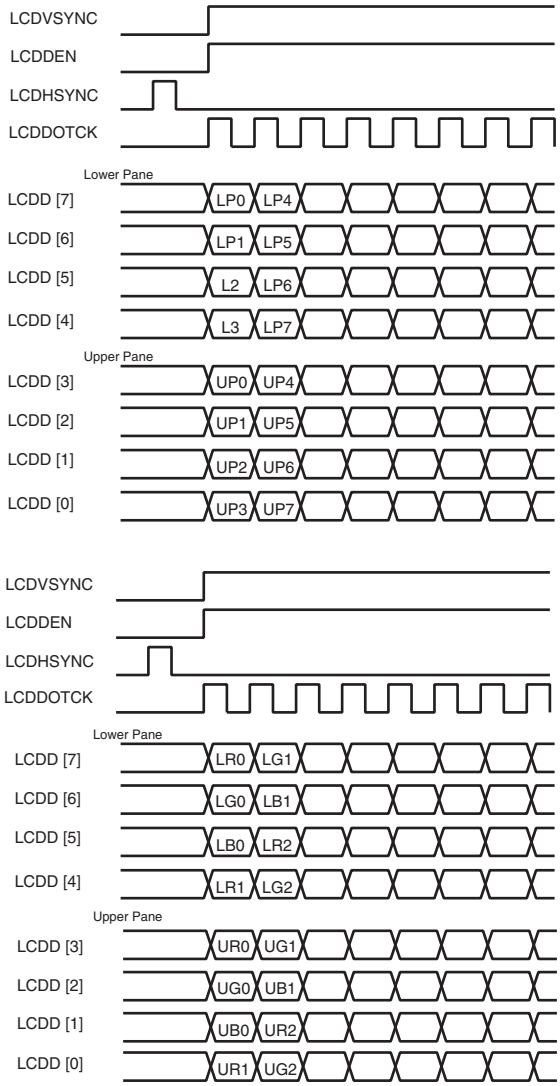

Figure 45-12. Dual Scan Monochrome and Color 16-bit Panel Timing (First Line Expanded View)

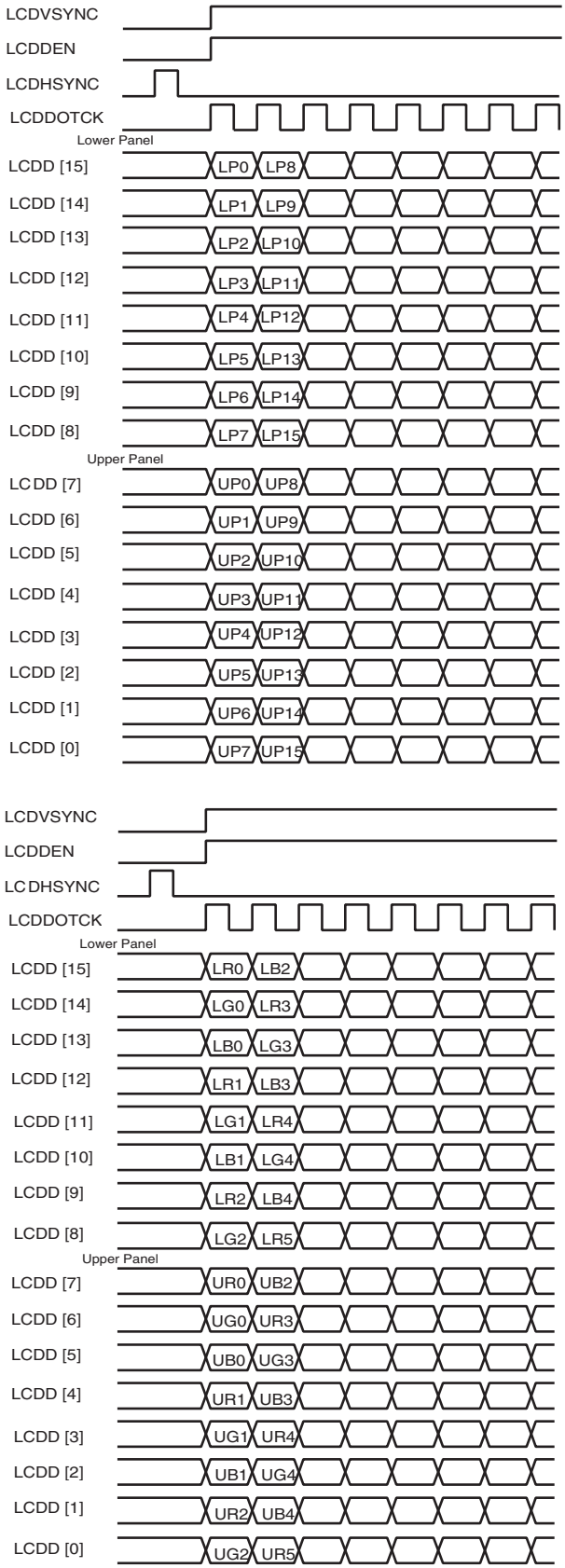

Table 45-15. LCD Signal Multiplexing

LCD Data Bus	4-bit STN Single Scan (mono, color)	8-bit STN Single Scan (mono, color)	8-bit STN Dual Scan (mono, color)	16-bit STN Dual Scan (mono, color)	24-bit TFT	16-bit TFT
LCDD[23]					LCD_BLUE7	LCD_BLUE4
LCDD[22]					LCD_BLUE6	LCD_BLUE3
LCDD[21]					LCD_BLUE5	LCD_BLUE2
LCDD[20]					LCD_BLUE4	LCD_BLUE1
LCDD[19]					LCD_BLUE3	LCD_BLUE0
LCDD[18]					LCD_BLUE2	
LCDD[17]					LCD_BLUE1	
LCDD[16]					LCD_BLUE0	
LCDD[15]				LCDLP7	LCD_GREEN7	LCD_GREEN5
LCDD[14]				LCDLP6	LCD_GREEN6	LCD_GREEN4
LCDD[13]				LCDLP5	LCD_GREEN5	LCD_GREEN3
LCDD[12]				LCDLP4	LCD_GREEN4	LCD_GREEN2
LCDD[11]				LCDLP3	LCD_GREEN3	LCD_GREEN1
LCDD[10]				LCDLP2	LCD_GREEN2	LCD_GREEN0
LCDD[9]				LCDLP1	LCD_GREEN1	
LCDD[8]				LCDLP0	LCD_GREEN0	
LCDD[7]		LCD7	LCDLP3	LCDUP7	LCD_RED7	LCD_RED4
LCDD[6]		LCD6	LCDLP2	LCDUP6	LCD_RED6	LCD_RED3
LCDD[5]		LCD5	LCDLP1	LCDUP5	LCD_RED5	LCD_RED2
LCDD[4]		LCD4	LCDLP0	LCDUP4	LCD_RED4	LCD_RED1
LCDD[3]	LCD3	LCD3	LCDUP3	LCDUP3	LCD_RED3	LCD_RED0
LCDD[2]	LCD2	LCD2	LCDUP2	LCDUP2	LCD_RED2	
LCDD[1]	LCD1	LCD1	LCDUP1	LCDUP1	LCD_RED1	
LCDD[0]	LCD0	LCD0	LCDUP0	LCDUP0	LCD_RED0	

45.7 Interrupts

The LCD Controller generates six different IRQs. All the IRQs are synchronized with the internal LCD Core Clock. The IRQs are:

- DMA Memory error IRQ. Generated when the DMA receives an error response from an AHB slave while it is doing a data transfer.
- FIFO underflow IRQ. Generated when the Serializer tries to read a word from the FIFO when the FIFO is empty.
- FIFO overwrite IRQ. Generated when the DMA Controller tries to write a word in the FIFO while the FIFO is full.
- DMA end of frame IRQ. Generated when the DMA controller updates the Frame Base Address pointers. This IRQ can be used to implement a double-buffer technique. For more information, see "Double-buffer Technique" on page 1076.
- End of Line IRQ. This IRQ is generated when the LINEBLANK period of each line is reached and the DMA Controller is in inactive state.
- End of Last Line IRQ. This IRQ is generated when the LINEBLANK period of the last line of the current frame is reached and the DMA Controller is in inactive state.

Each IRQ can be individually enabled, disabled or cleared, in the LCD_IER (Interrupt Enable Register), LCD_IDR (Interrupt Disable Register) and LCD_ICR (Interrupt Clear Register) registers. The LCD_IMR register contains the mask value for each IRQ source and the LDC_ISR contains the status of each IRQ source. A more detailed description of these registers can be found in "LCD Controller (LCDC) User Interface" on page 1079.

45.8 Configuration Sequence

The DMA Controller starts to transfer image data when the LCDC Core is activated (Write to LCD_PWR field of PWRCON register). Thus, the user should configure the LCDC Core and configure and enable the DMA Controller prior to activation of the LCD Controller. In addition, the image data to be shows should be available when the LCDC Core is activated, regardless of the value programmed in the GUARD_TIME field of the PWRCON register.

To disable the LCD Controller, the user should disable the LCDC Core and then disable the DMA Controller. The user should not enable LIP again until the LCDC Core is in IDLE state. This is checked by reading the LCD_BUSY bit in the PWRCON register.

The initialization sequence that the user should follow to make the LCDC work is:

- Create or copy the first image to show in the display buffer memory.
- If a palletized mode is used, create and store a palette in the internal LCD Palette memory(See "Palette" on page 1060.
- Configure the LCD Controller Core without enabling it:
  - LCDCON1 register: Program the C*LKVAL* and *BYPASS* fields: these fields control the pixel clock divisor that is used to generate the pixel clock LCDDOTCK. The value to program depends on the LCD Core clock and on the type and size of the LCD Module used. There is a minimum value of the LCDDOTCK clock period that depends on the LCD Controller Configuration, this minimum value can be found in Table 45-14 on page 1065. The equations that are used to calculate the value of the pixel clock divisor can be found at the end of the section "Timegen" on page 1064
  - LCDCON2 register: Program its fields following their descriptions in the LCD Controller User Interface section below and considering the type of LCD module used and the desired working mode. Consider that not all combinations are possible.
  - LCDTIM1 and LCDTIM2 registers: Program their fields according to the datasheet of the LCD module used and with the help of the Timegen section in page 10. Note that some fields are not applicable to STN modules and must be programmed with 0 values. Note also that there is a limitation on the minimum value of VHDLY, HPW, HBP that depends on the configuration of the LCDC.
  - LCDFRMCFG register: program the dimensions of the LCD module used.

- LCDFIFO register: To program it, use the formula in section "FIFO" on page 1058
- LCDMVAL register: Its configuration depends on the LCD Module used and should be tuned to improve the image quality in the display (See "Timegen" on page 1064.)
- DP1_2 to DP6_7 registers: they are only used for STN displays. They contain the dithering patterns used to generate gray shades or colors in these modules. They are loaded with recommended patterns at reset, so it is not necessary to write anything on them. They can be used to improve the image quality in the display by tuning the patterns in each application.
- PWRCON Register: this register controls the power-up sequence of the LCD, so take care to use it properly. Do not enable the LCD (writing a 1 in LCD_PWR field) until the previous steps and the configuration of the DMA have been finished.
- CONTRAST_CTR and CONTRAST_VAL: use this registers to adjust the contrast of the display, when the *LCDCC* line is used.

• Configure the DMA Controller. The user should configure the base address of the display buffer memory, the size of the AHB transaction and the size of the display image in memory. When the DMA is configured the user should enable the DMA. To do so the user should configure the following registers:
  - DMABADDR1 and DMABADDR2 registers: In single scan mode only DMABADDR1 register must be configured with the base address of the display buffer in memory. In dual scan mode DMABADDR1 should be configured with the base address of the Upper Panel display buffer and DMABADDR2 should be configured with the base address of the Lower Panel display buffer.
  - DMAFRMCFG register: Program the FRMSIZE field. Note that in dual scan mode the vertical size to use in the calculation is that of each panel. Respect to the BRSTLN field, a recommended value is a 4-word burst.
  - DMACON register: Once both the LCD Controller Core and the DMA Controller have been configured, enable the DMA Controller by writing a "1" to the DMAEN field of this register. If using a dual scan module or the 2D addressing feature, do not forget to write the DMAUPDT bit after every change to the set of DMA configuration values.
  - DMA2DCFG register: Required only in 2D memory addressing mode (see "2D Memory Addressing" on page 1077).

• Finally, enable the LCD Controller Core by writing a "1" in the LCD_PWR field of the PWRCON register and do any other action that may be required to turn the LCD module on.

45.9 Double-buffer Technique

The double-buffer technique is used to avoid flickering while the frame being displayed is updated. Instead of using a single buffer, there are two different buffers, the back buffer (background buffer) and the primary buffer (the buffer being displayed).

The host updates the back buffer while the LCD Controller is displaying the primary buffer. When the back buffer has been updated the host updates the DMA Base Address registers.

When using a Dual Panel LCD Module, both base address pointers should be updated in the same frame. There are two possibilities:

• Check the DMAFRMPTx register to ensure that there is enough time to update the DMA Base Address registers before the end of frame.

• Update the Frame Base Address Registers when the End Of Frame IRQ is generated.

Once the host has updated the Frame Base Address Registers and the next DMA end of frame IRQ arrives, the back buffer and the primary buffer are swapped and the host can work with the new back buffer.

When using a dual-panel LCD module, both base address pointers should be updated in the same frame. In order to achieve this, the DMAUPDT bit in DMACON register must be used to validate the new base address.

45.10 2D Memory Addressing

The LCDC can be configured to work on a frame buffer larger than the actual screen size. By changing the values in a few registers, it is easy to move the displayed area along the frame buffer width and height.

Figure 45-13. Frame Buffer Addressing

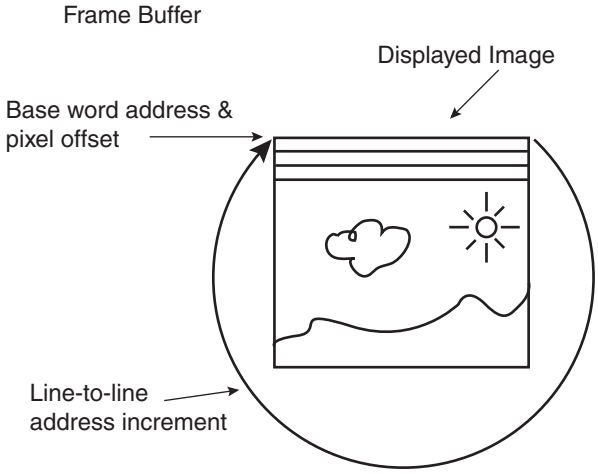

In order to locate the displayed window within a larger frame buffer, the software must:

- Program the DMABADDR1 (DMABADDR2) register(s) to make them point to the word containing the first pixel of the area of interest.
- Program the PIXELOFF field of DMA2DCFG register to specify the offset of this first pixel within the 32-bit memory word that contains it.
- Define the width of the complete frame buffer by programming in the field ADDRINC of DMA2DCFG register the address increment between the last word of a line and the first word of the next line (in number of 32-bit words).
- Enable the 2D addressing mode by writing the DMA2DEN bit in DMACON register. If this bit is not activated, the values in the DMA2DCFG register are not considered and the controller assumes that the displayed area occupies a continuous portion of the memory.

The above configuration can be changed frame to frame, so the displayed window can be moved rapidly. Note that the FRMSIZE field of DMAFRMCFG register must be updated with any movement of the displaying window. Note also that the software must write bit DMAUPDT in DMACON register after each configuration for it to be accepted by LCDC.

Note: In 24 bpp packed mode, the DMA base address must point to a word containing a complete pixel (possible values of PIXELOFF are 0 and 8). This means that the horizontal origin of the displaying window must be a multiple of 4 pixels or a multiple of 4 pixels minus 1 ($x = 4n$ or $x = 4n-1$, valid origins are pixel 0,3,4,7,8,11,12, etc.).

45.11 Register Configuration Guide

Program the PIO Controller to enable LCD signals.

Enable the LCD controller clock in the Power Management Controller.

45.11.1 STN Mode Example

STN color(R,G,B) 320*240, 8-bit single scan, 70 frames/sec, Master clock = 60 Mhz

Data rate: 320*240*70*3/8 = 2.016 MHz

HOZVAL= ((3*320)/8) - 1

LINEVAL= 240 -1

CLKVAL = (60 MHz/2.016 MHz) - 1 = 29

LCDCON1= CLKVAL << 12

LCDCON2 = LITTLEENDIAN | SINGLESCAN | STNCOLOR | DISP8BIT| PS8BPP;

LCDTIM1 = 0;

LCDTIM2 = 10 | (10 << 21);

LCDFRMCFG = (HOZVAL << 21) | LINEVAL;

LCDMVAL = 0x80000004;

DMAFRMCFG = (7 << 24) + (320 * 240 * 8) / 32;

45.11.2 TFT Mode Example

This example is based on the NEC TFT color LCD module NL6448BC20-08.

TFT 640*480, 16-bit single scan, 60 frames/sec, pixel clock frequency = [21 MHz..29 MHz] with a typical value = 25.175 MHz.

The Master clock must be (n + 1)*pixel clock frequency

HOZVAL = 640 - 1

LINEVAL = 480 - 1

If Master clock is 100 MHz

CLKVAL = (100 MHz/ 25.175 MHz) - 1= 3

VFP = (12 -1), VBP = (31-1), VPW = (2-1), VHDLY= (2-1)

HFP = (16-1), HBP = (48 -1), HPW= (96-1)

LCDCON1= CLKVAL << 12

LCDCON2 = LITTLEENDIAN | CLKMOD | INVERT_CLK | INVERT_LINE | INVERT_FRM | PS16BPP | SINGLES-CAN | TFT

LCDTIM1 = VFP | (VBP << 8) | (VPW << 16) | (VHDLY << 24)

LCDTIM2 = HBP | (HPW << 8) | (HFP << 21)

LCDFRMCFG = (HOZVAL << 21) | LINEVAL

LCDMVAL = 0

DMAFRMCFG = (7 << 24) + (640 * 480* 16) / 32;

45.12 LCD Controller (LCDC) User Interface

Table 45-16. Register Mapping

Offset	Register	Name	Access	Reset
0x0	DMA Base Address Register 1	DMABADDR1	Read-write	0x00000000
0x4	DMA Base Address Register 2	DMABADDR2	Read-write	0x00000000
0x8	DMA Frame Pointer Register 1	DMAFRMPT1	Read-only	0x00000000
0xC	DMA Frame Pointer Register 2	DMAFRMPT2	Read-only	0x00000000
0x10	DMA Frame Address Register 1	DMAFRMADD1	Read-only	0x00000000
0x14	DMA Frame Address Register 2	DMAFRMADD2	Read-only	0x00000000
0x18	DMA Frame Configuration Register	DMAFRMCFG	Read-write	0x00000000
0x1C	DMA Control Register	DMACON	Read-write	0x00000000
0x20	DMA Control Register	DMA2DCFG	Read-write	0x00000000
0x800	LCD Control Register 1	LCDCON1	Read-write	0x00002000
0x804	LCD Control Register 2	LCDCON2	Read-write	0x00000000
0x808	LCD Timing Register 1	LCDTIM1	Read-write	0x00000000
0x80C	LCD Timing Register 2	LCDTIM2	Read-write	0x00000000
0x810	LCD Frame Configuration Register	LCDFRMCFG	Read-write	0x00000000
0x814	LCD FIFO Register	LCDFIFO	Read-write	0x00000000
0x818	LCDMOD Toggle Rate Value Register	LCDMVAL	Read-write	0x00000000
0x81C	Dithering Pattern DP1_2	DP1_2	Read-write	0xA5
0x820	Dithering Pattern DP4_7	DP4_7	Read-write	0x5AF0FA5
0x824	Dithering Pattern DP3_5	DP3_5	Read-write	0xA5A5F
0x828	Dithering Pattern DP2_3	DP2_3	Read-write	0xA5F
0x82C	Dithering Pattern DP5_7	DP5_7	Read-write	0xFAF5FA5
0x830	Dithering Pattern DP3_4	DP3_4	Read-write	0xFAF5
0x834	Dithering Pattern DP4_5	DP4_5	Read-write	0xFAF5F
0x838	Dithering Pattern DP6_7	DP6_7	Read-write	0xF5FFAFF
0x83C	Power Control Register	PWRCON	Read-write	0x0000000e
0x840	Contrast Control Register	CONTRAST_CTR	Read-write	0x00000000
0x844	Contrast Value Register	CONTRAST_VAL	Read-write	0x00000000
0x848	LCD Interrupt Enable Register	LCD_IER	Write-only	0x0
0x84C	LCD Interrupt Disable Register	LCD_IDR	Write-only	0x0
0x850	LCD Interrupt Mask Register	LCD_IMR	Read-only	0x0
0x854	LCD Interrupt Status Register	LCD_ISR	Read-only	0x0
0x858	LCD Interrupt Clear Register	LCD_ICR	Write-only	0x0
0x860	LCD Interrupt Test Register	LCD_ITR	Write-only	0
0x864	LCD Interrupt Raw Status Register	LCD_IRR	Read-only	0
0x8E4	Write Protection Control Register	LCD_WPCR	Read-write	0

Table 45-16. Register Mapping (Continued)

Offset	Register	Name	Access	Reset
0x8E8	Write Protection Status Register	LCD_WPSR	Read-only	0
0xC00	Palette entry 0	LUT ENTRY 0	Read-write	
0xC04	Palette entry 1	LUT ENTRY 1	Read-write	
0xC08	Palette entry 2	LUT ENTRY 2	Read-write	
0xC0C	Palette entry 3	LUT ENTRY 3	Read-write	
…		…		
0xFFC	Palette entry 255	LUT ENTRY 255	Read-write	

45.12.1 DMA Base Address Register 1

Name: DMABADDR1

Address:0x00500000

Access: Read-write

Reset value: 0x00000000

31	30	29	28	27	26	25	24
BADDR-U							
23	22	21	20	19	18	17	16
BADDR-U							
15	14	13	12	11	10	9	8
BADDR-U							
7	6	5	4	3	2	1	0
BADDR-U						0	0

- **BADDR-U**

Base Address for the upper panel in dual scan mode. Base Address for the complete frame in single scan mode.

If a dual scan configuration is selected in LCDCON2 register or bit DMA2DEN in register DMACON is set, the bit DMAUPDT in that same register must be written after writing any new value to this field in order to make the DMA controller use this new value.

45.12.2 DMA Base Address Register 2

Name: DMABADDR2

Address:0x00500004

Access: Read-write

Reset value: 0x00000000

31	30	29	28	27	26	25	24
BADDR-L							
23	22	21	20	19	18	17	16
BADDR-L							
15	14	13	12	11	10	9	8
BADDR-L							
7	6	5	4	3	2	1	0
BADDR-L							

- **BADDR-L**

Base Address for the lower panel in dual scan mode only.

If a dual scan configuration is selected in LCDCON2 register or bit DMA2DEN in register DMACON is set, the bit DMAUPDT in that same register must be written after writing any new value to this field in order to make the DMA controller use this new value.

45.12.3 DMA Frame Pointer Register 1

Name: DMAFRMPT1

Address:0x00500008

Access: Read-only

Reset value: 0x00000000

31	30	29	28	27	26	25	24
–	–	–	–	–	–	–	–
23	22	21	20	19	18	17	16
–	FRMPT-U						
15	14	13	12	11	10	9	8
FRMPT-U							
7	6	5	4	3	2	1	0
FRMPT-U							

- **FRMPT-U**

Current value of frame pointer for the upper panel in dual scan mode. Current value of frame pointer for the complete frame in single scan mode. Down count from FRMSIZE to 0.

Note: This register is read-only and contains the current value of the frame pointer (number of words to the end of the frame). It can be used as an estimation of the number of words transferred from memory for the current frame.

45.12.4 DMA Frame Pointer Register 2

Name: DMAFRMPT2

Address:0x0050000C

Access: Read-only

Reset value: 0x00000000

31	30	29	28	27	26	25	24
–	–	–	–	–	–	–	–
23	22	21	20	19	18	17	16
-	FRMPT-L						
15	14	13	12	11	10	9	8
FRMPT-L							
7	6	5	4	3	2	1	0
FRMPT-L							

- **FRMPT-L**

Current value of frame pointer for the Lower panel in dual scan mode only. Down count from FRMSIZE to 0.

Note: This register is read-only and contains the current value of the frame pointer (number of words to the end of the frame). It can be used as an estimation of the number of words transferred from memory for the current frame.

45.12.5 DMA Frame Address Register 1

Name: DMAFRMADD1

Address:0x00500010

Access: Read-only

Reset value: 0x00000000

31	30	29	28	27	26	25	24
FRMADD-U							
23	22	21	20	19	18	17	16
FRMADD-U							
15	14	13	12	11	10	9	8
FRMADD-U							
7	6	5	4	3	2	1	0
FRMADD-U							

- **FRMADD-U**

Current value of frame address for the upper panel in dual scan mode. Current value of frame address for the complete frame in single scan.

Note: This register is read-only and contains the current value of the last DMA transaction in the bus for the panel/frame.

45.12.6 DMA Frame Address Register 2

Name: DMAFRMADD2

Address:0x00500014

Access: Read-only

Reset value: 0x00000000

31	30	29	28	27	26	25	24
FRMADD-L							
23	22	21	20	19	18	17	16
FRMADD-L							
15	14	13	12	11	10	9	8
FRMADD-L							
7	6	5	4	3	2	1	0
FRMADD-L							

- **FRMADD-L**

Current value of frame address for the lower panel in single scan mode only.

Note: This register is read-only and contains the current value of the last DMA transaction in the bus for the panel.

45.12.7 DMA Frame Configuration Register

Name: DMAFRMCFG

Address:0x00500018

Access: Read-write

Reset value: 0x00000000

31	30	29	28	27	26	25	24
–	BRSTLN						
23	22	21	20	19	18	17	16
–	FRMSIZE						
15	14	13	12	11	10	9	8
FRMSIZE							
7	6	5	4	3	2	1	0
FRMSIZE							

- **FRMSIZE: Frame Size**

In single scan mode, this is the frame size in words. In dual scan mode, this is the size of each panel.

If a dual scan configuration is selected in LCDCON2 register or bit DMA2DEN in register DMACON is set, the bit DMAUPDT in that same register must be written after writing any new value to this field in order to make the DMA controller use this new value.

- **BRSTLN: Burst Length in Words**

Program with the desired burst length - 1

45.12.8 DMA Control Register

Name: DMACON

Address:0x0050001C

Access: Read-write

Reset value: 0x00000000

31	30	29	28	27	26	25	24
–	–	–	–	–	–	–	–
23	22	21	20	19	18	17	16
–	–	–	–	–	–	–	–
15	14	13	12	11	10	9	8
–	–	–	–	–	–	–	–
7	6	5	4	3	2	1	0
–	–	–	DMA2DEN	DMAUPDT	DMABUSY	DMARST	DMAEN

- **DMAEN: DMA Enable**

0: DMA is disabled.

1: DMA is enabled.

- **DMARST: DMA Reset (Write-only)**

0: No effect.

1: Reset DMA module. DMA Module should be reset only when disabled and in idle state.

- **DMABUSY: DMA Busy**

0: DMA module is idle.

1: DMA module is busy (doing a transaction on the AHB bus).

- **DMAUPDT: DMA Configuration Update**

0: No effect

1: Update DMA Configuration. Used for simultaneous updating of DMA parameters in dual scan mode or when using 2D addressing. The values written in the registers DMABADDR1, DMABADDR2 and DMA2DCFG, and in the field FRMSIZE of register DMAFRMCFG, are accepted by the DMA controller and are applied at the next frame. This bit is used only if a dual scan configuration is selected (bit SCANMOD of LCDCON2 register) or 2D addressing is enabled (bit DMA2DEN in this register). Otherwise, the LCD controller accepts immediately the values written in the registers referred to above.

- **DMA2DEN: DMA 2D Addressing Enable**

0: 2D addressing is disabled (values in register DMA2DCFG are “don’t care”).

1: 2D addressing is enabled.

45.12.9 LCD DMA 2D Addressing Register

Name: DMA2DCFG

Address:0x00500020

Access: Read-write

Reset value: 0x00000000

31	30	29	28	27	26	25	24
–	–	–	PIXELOFF				
23	22	21	20	19	18	17	16
–	–	–	–	–	–	–	–
15	14	13	12	11	10	9	8
ADDRINC							
7	6	5	4	3	2	1	0
ADDRINC							

- **ADDRINC: DMA 2D Addressing Address increment**

When 2-D DMA addressing is enabled (bit DMA2DEN is set in register DMACON), this field specifies the number of bytes that the DMA controller must jump between screen lines. Itb must be programmed as: [({address of first 32-bit word in a screen line} - {address of last 32-bit word in previous line})]. In other words, it is equal to 4*[number of 32-bit words occupied by each line in the complete frame buffer minus the number of 32-bit words occupied by each displayed line]. Bit DMAUPDT in register DMACON must be written after writing any new value to this field in order to make the DMA controller use this new value.

- **PIXELOFF: DAM2D Addressing Pixel offset**

When 2D DMA addressing is enabled (bit DMA2DEN is set in register DMACON), this field specifies the offset of the first pixel in each line within the memory word that contains this pixel. The offset is specified in number of bits in the range 0-31, so for example a value of 4 indicates that the first pixel in the screen starts at bit 4 of the 32-bit word pointed by register DMABADDR1. Bits 0 to 3 of that word are not used. This example is valid for little endian memory organization. When using big endian memory organization, this offset is considered from bit 31 downwards, or equivalently, a given value of this field always selects the pixel in the same relative position within the word, independently of the memory ordering configuration. Bit DMAUPDT in register DMACON must be written after writing any new value to this field in order to make the DMA controller use this new value.

45.12.10 LCD Control Register 1

Name: LCDCON1

Address:0x00500800

Access: Read-write, except LINECNT: Read-only

Reset value: 0x00002000

31	30	29	28	27	26	25	24
LINECNT							
23	22	21	20	19	18	17	16
LINECNT			CLKVAL				
15	14	13	12	11	10	9	8
CLKVAL				–	–	–	–
7	6	5	4	3	2	1	0
–	–	–	–	–	–	–	BYPASS

- **BYPASS: Bypass LCDDOTCK Divider**

0: The divider is not bypassed. LCDDOTCK frequency defined by the CLKVAL field.

1: The LCDDOTCK divider is bypassed. LCDDOTCK frequency is equal to the LCDC Clock frequency.

- **CLKVAL: Clock Divider**

9-bit divider for pixel clock (LCDDOTCK) frequency.

$$\text{Pixel_clock} = \text{system_clock} / (\text{CLKVAL} + 1)$$

- **LINECNT: Line Counter (Read-only)**

Current Value of 11-bit line counter. Down count from LINEVAL to 0.

45.12.11 LCD Control Register 2

Name: LCDCON2

Address:0x00500804

Access: Read-write

Reset value: 0x0000000

31	30	29	28	27	26	25	24
MEMOR		–	–	–	–	–	–
23	22	21	20	19	18	17	16
–	–	–	–	–	–	–	–
15	14	13	12	11	10	9	8
CLKMOD	–	–	INVDVAL	INVCLK	INVLINE	INVFRAME	INVVD
7	6	5	4	3	2	1	0
PIXELSIZE			IFWIDTH		SCANMOD	DISTYPE	

- **DISTYPE: Display Type**

DISTYPE		
0	0	STN Monochrome
0	1	STN Color
1	0	TFT
1	1	Reserved

- **SCANMOD: Scan Mode**

0: Single Scan

1: Dual Scan

- **IFWIDTH: Interface width (STN)**

IFWIDTH		
0	0	4-bit (Only valid in single scan STN mono or color)
0	1	8-bit (Only valid in STN mono or Color)
1	0	16-bit (Only valid in dual scan STN mono or color)
1	1	Reserved

- **PIXELSIZE: Bits per pixel**

PIXELSIZE			
0	0	0	1 bit per pixel
0	0	1	2 bits per pixel
0	1	0	4 bits per pixel
0	1	1	8 bits per pixel
1	0	0	16 bits per pixel
1	0	1	24 bits per pixel, packed (Only valid in TFT mode)
1	1	0	24 bits per pixel, unpacked (Only valid in TFT mode)
1	1	1	Reserved

- **INVVD: LCDD polarity**

0: Normal

1: Inverted

- **INVFRAME: LCDVSYNC polarity**

0: Normal (active high)

1: Inverted (active low)

- **INVLINE: LCDHSYNC polarity**

0: Normal (active high)

1: Inverted (active low)

- **INVCLK: LCDDOTCK polarity**

0: Normal (LCDD fetched at LCDDOTCK falling edge)

1: Inverted (LCDD fetched at LCDDOTCK rising edge)

- **INVDVAL: LCDDEN polarity**

0: Normal (active high)

1: Inverted (active low)

- **CLKMOD: LCDDOTCK mode**

0: LCDDOTCK only active during active display period

1: LCDDOTCK always active

- **MEMOR: Memory Ordering Format**

00: Big Endian

10: Little Endian

11: WinCE format

45.12.12 LCD Timing Configuration Register 1

Name: LCDTIM1

Address:0x00500808

Access: Read-write

Reset value: 0x0000000

31	30	29	28	27	26	25	24
1	–	–	–	VHDLY			
23	22	21	20	19	18	17	16
–	–	VPW					
15	14	13	12	11	10	9	8
VBP							
7	6	5	4	3	2	1	0
VFP							

- **VFP: Vertical Front Porch**

In TFT mode, these bits equal the number of idle lines at the end of the frame.

In STN mode, these bits should be set to 0.

- **VBP: Vertical Back Porch**

In TFT mode, these bits equal the number of idle lines at the beginning of the frame.

In STN mode, these bits should be set to 0.

- **VPW: Vertical Synchronization pulse width**

In TFT mode, these bits equal the vertical synchronization pulse width, given in number of lines. LCDVSYNC width is equal to (VPW+1) lines.

In STN mode, these bits should be set to 0.

- **VHDLY: Vertical to horizontal delay**

In TFT mode, this is the delay between LCDVSYNC rising or falling edge and LCDHSYNC rising edge. Delay is (VHDLY+1) LCDDOTCK cycles. Bit 31 must be written to 1.

In STN mode, these bits should be set to 0.

45.12.13 LCD Timing Configuration Register 2

Name: LCDTIM2

Address:0x0050080C

Access: Read-write

Reset value: 0x0000000

31	30	29	28	27	26	25	24
HFP							
23	22	21	20	19	18	17	16
HFP			–	–	–	–	–
15	14	13	12	11	10	9	8
–	–	HPW					
7	6	5	4	3	2	1	0
HBP							

- **HBP: Horizontal Back Porch**

Number of idle LCDDOTCK cycles at the beginning of the line. Idle period is (HBP+1) LCDDOTCK cycles.

- **HPW: Horizontal synchronization pulse width**

Width of the LCDHSYNC pulse, given in LCDDOTCK cycles. Width is (HPW+1) LCDDOTCK cycles.

- **HFP: Horizontal Front Porch**

Number of idle LCDDOTCK cycles at the end of the line. Idle period is (HFP+1) LCDDOTCK cycles.

45.12.14 LCD Frame Configuration Register

Name: LCDFRMCFG

Address:0x00500810

Access: Read-write

Reset value: 0x0000000

31	30	29	28	27	26	25	24
LINESIZE							
23	22	21	20	19	18	17	16
LINESIZE			–	–	–	–	–
15	14	13	12	11	10	9	8
–	–	–	–	–	LINEVAL		
7	6	5	4	3	2	1	0
LINEVAL							

- **LINEVAL: Vertical size of LCD module**

In single scan mode: vertical size of LCD Module, in pixels, minus 1

In dual scan mode: vertical display size of each LCD panel, in pixels, minus 1

- **LINESIZE: Horizontal size of LCD module, in pixels, minus 1**

45.12.15 LCD FIFO Register

Name: LCDFIFO

Address:0x00500814

Access: Read-write

Reset value: 0x0000000

31	30	29	28	27	26	25	24
–	–	–	–	–	–	–	–
23	22	21	20	19	18	17	16
–	–	–	–	–	–	–	–
15	14	13	12	11	10	9	8
FIFOTH							
7	6	5	4	3	2	1	0
FIFOTH							

- **FIFOTH: FIFO Threshold**

Must be programmed with:

FIFOTH (in Words) = 512 - (2 x DMA_BURST_LENGTH + 3)

where:

- 512 is the effective size of the FIFO in Words. It is the total FIFO memory size in single scan mode and half that size in dual scan mode.
- DMA_burst_length is the burst length of the transfers made by the DMA (in Words). Refer to “BRSTLN: Burst Length in Words” on page 1084.

45.12.16 LCDMOD Toggle Rate Value Register

Name: LCDMVAL

Access: Read-write

Reset value: 0x00000000

31	30	29	28	27	26	25	24
MMODE	–	–	–	–	–	–	–
23	22	21	20	19	18	17	16
–	–	–	–	–	–	–	–
15	14	13	12	11	10	9	8
–	–	–	–	–	–	–	–
7	6	5	4	3	2	1	0
MVAL							

- **MVAL: LCDMOD toggle rate value**

LCDMOD toggle rate if MMODE = 1. Toggle rate is MVAL + 1 line periods.

- **MMODE: LCDMOD toggle rate select**

0: Each Frame

1: Rate defined by MVAL

45.12.17 Dithering Pattern DP1_2 Register

Name: DP1_2

Address:0x0050081C

Access: Read-write

Reset value: 0xA5

31	30	29	28	27	26	25	24
–	–	–	–	–	–	–	–
23	22	21	20	19	18	17	16
–	–	–	–	–	–	–	–
15	14	13	12	11	10	9	8
–	–	–	–	–	–	–	–
7	6	5	4	3	2	1	0
DP1_2							

- **DP1_2: Pattern value for ½ duty cycle**

45.12.18 Dithering Pattern DP4_7 Register

Name: DP4_7

Address:0x00500820

Access: Read-write

Reset value: 0x5AF0FA5

31	30	29	28	27	26	25	24
–	–	–	–	DP4_7			
23	22	21	20	19	18	17	16
DP4_7							
15	14	13	12	11	10	9	8
DP4_7							
7	6	5	4	3	2	1	0
DP4_7							

- **DP4_7: Pattern value for 4/7 duty cycle**

45.12.19 Dithering Pattern DP3_5 Register

Name: DP3_5

Address:0x00500824

Access: Read-write

Reset value: 0xA5A5F

31	30	29	28	27	26	25	24
–	–	–	–	–	–	–	–
23	22	21	20	19	18	17	16
–	–	–	–	DP3_5			
15	14	13	12	11	10	9	8
DP3_5							
7	6	5	4	3	2	1	0
DP3_5							

- **DP3_5: Pattern value for 3/5 duty cycle**

45.12.20 Dithering Pattern DP2_3 Register

Name: DP2_3: Dithering Pattern DP2_3 Register

Address:0x00500828

Access: Read-write

Reset value: 0xA5F

31	30	29	28	27	26	25	24
–	–	–	–	–	–	–	–
23	22	21	20	19	18	17	16
–	–	–	–	–	–	–	–
15	14	13	12	11	10	9	8
–	–	–	–	DP2_3			
7	6	5	4	3	2	1	0
DP2_3							

- **DP2_3: Pattern value for 2/3 duty cycle**

45.12.21 Dithering Pattern DP5_7 Register

Name: DP5_7:

Address:0x0050082C

Access: Read-write

Reset value: 0xFAF5FA5

31	30	29	28	27	26	25	24
–	–	–	–	DP5_7			
23	22	21	20	19	18	17	16
DP5_7							
15	14	13	12	11	10	9	8
DP5_7							
7	6	5	4	3	2	1	0
DP5_7							

- **DP5_7: Pattern value for 5/7 duty cycle**

45.12.22 Dithering Pattern DP3_4 Register

Name: DP3_4

Address:0x00500830

Access: Read-write

Reset value: 0xFAF5

31	30	29	28	27	26	25	24
–	–	–	–	–	–	–	–
23	22	21	20	19	18	17	16
–	–	–	–	–	–	–	–
15	14	13	12	11	10	9	8
DP3_4							
7	6	5	4	3	2	1	0
DP3_4							

- **DP3_4: Pattern value for 3/4 duty cycle**

45.12.23 Dithering Pattern DP4_5 Register

Name: DP4_5

Address:0x00500834

Access: Read-write

Reset value: 0xFAF5F

31	30	29	28	27	26	25	24
–	–	–	–	–	–	–	–
23	22	21	20	19	18	17	16
–	–	–	–	DP4_5			
15	14	13	12	11	10	9	8
DP4_5							
7	6	5	4	3	2	1	0
DP4_5							

- **DP4_5: Pattern value for 4/5 duty cycle**

45.12.24 Dithering Pattern DP6_7 Register

Name: DP6_7

Address:0x00500838

Access: Read-write

Reset value: 0xF5FFAFF

31	30	29	28	27	26	25	24
–	–	–	–	DP6_7			
23	22	21	20	19	18	17	16
DP6_7							
15	14	13	12	11	10	9	8
DP6_7							
7	6	5	4	3	2	1	0
DP6_7							

- **DP6_7: Pattern value for 6/7 duty cycle**

45.12.25 Power Control Register

Name: PWRCON

Address:0x0050083C

Access: Read-write

Reset value: 0x0000000e

31	30	29	28	27	26	25	24
LCD_BUSY	–	–	–	–	–	–	–
23	22	21	20	19	18	17	16
–	–	–	–	–	–	–	–
15	14	13	12	11	10	9	8
–	–	–	–	–	–	–	–
7	6	5	4	3	2	1	0
GUARD_TIME							LCD_PWR

- **LCD_PWR: LCD module power control**

0 = lcd_pwr signal is low, other lcd_* signals are low.

0->1 = lcd_* signals activated, lcd_pwr is set high with the delay of GUARD_TIME frame periods.

1 = lcd_pwr signal is high, other lcd_* signals are active.

1->0 = lcd_pwr signal is low, other lcd_* signals are active, but are set low after GUARD_TIME frame periods.

- **GUARD_TIME**

Delay in frame periods between applying control signals to the LCD module and setting LCD_PWR high, and between setting LCD_PWR low and removing control signals from LCD module

- **LCD_BUSY**

Read-only field. If 1, it indicates that the LCD is busy (active and displaying data, in power on sequence or in power off sequence).

45.12.26 Contrast Control Register

Name: CONTRAST_CTR

Address:0x00500840

Access: Read-write

Reset value: 0x00000000

31	30	29	28	27	26	25	24
–	–	–	–	–	–	–	–
23	22	21	20	19	18	17	16
–	–	–	–	–	–	–	–
15	14	13	12	11	10	9	8
–	–	–	–	–	–	–	–
7	6	5	4	3	2	1	0
–	–	–	–	ENA	POL	PS	

- **PS**

This 2-bit value selects the configuration of a counter prescaler. The meaning of each combination is as follows:

PS		
0	0	The counter advances at a rate of fCOUNTER = fLCDC_CLOCK.
0	1	The counter advances at a rate of fCOUNTER = fLCDC_CLOCK/2.
1	0	The counter advances at a rate of fCOUNTER = fLCDC_CLOCK/4.
1	1	The counter advances at a rate of fCOUNTER = fLCDC_CLOCK/8.

- **POL**

This bit defines the polarity of the output. If 1, the output pulses are high level (the output will be high whenever the value in the counter is less than the value in the compare register CONSTRAST_VAL). If 0, the output pulses are low level.

- **ENA**

When 1, this bit enables the operation of the PWM generator. When 0, the PWM counter is stopped.

45.12.27 Contrast Value Register

Name: CONSTRAST_VAL

Access: Read-write

Reset value: 0x00000000

31	30	29	28	27	26	25	24
–	–	–	–	–	–	–	–
23	22	21	20	19	18	17	16
–	–	–	–	–	–	–	–
15	14	13	12	11	10	9	8
–	–	–	–	–	–	–	–
7	6	5	4	3	2	1	0
CVAL							

- **CVAL**

PWM compare value. Used to adjust the analog value obtained after an external filter to control the contrast of the display.

45.12.28 LCD Interrupt Enable Register

Name: LCD_IER

Address:0x00500848

Access: Write-only

Reset value: 0x0

31	30	29	28	27	26	25	24
–	–	–	–	–	–	–	–
23	22	21	20	19	18	17	16
–	–	–	–	–	–	–	–
15	14	13	12	11	10	9	8
–	–	–	–	–	–	–	–
7	6	5	4	3	2	1	0
–	MERIE	OWRIE	UFLWIE	-	EOFIE	LSTLNIE	LNIE

- **LNIE: Line interrupt enable**

0: No effect

1: Enable each line interrupt

- **LSTLNIE: Last line interrupt enable**

0: No effect

1: Enable last line interrupt

- **EOFIE: DMA End of frame interrupt enable**

0: No effect

1: Enable End Of Frame interrupt

- **UFLWIE: FIFO underflow interrupt enable**

0: No effect

1: Enable FIFO underflow interrupt

- **OWRIE: FIFO overwrite interrupt enable**

0: No effect

1: Enable FIFO overwrite interrupt

- **MERIE: DMA memory error interrupt enable**

0: No effect

1: Enable DMA memory error interrupt

45.12.29 LCD Interrupt Disable Register

Name: LCD_IDR

Address:0x0050084C

Access: Write-only

Reset value: 0x0

31	30	29	28	27	26	25	24
–	–	–	–	–	–	–	–
23	22	21	20	19	18	17	16
–	–	–	–	–	–	–	–
15	14	13	12	11	10	9	8
–	–	–	–	–	–	–	–
7	6	5	4	3	2	1	0
–	MERID	OWRID	UFLWID	–	EOFID	LSTLNID	LNID

- **LNID: Line interrupt disable**

0: No effect

1: Disable each line interrupt

- **LSTLNID: Last line interrupt disable**

0: No effect

1: Disable last line interrupt

- **EOFID: DMA End of frame interrupt disable**

0: No effect

1: Disable End Of Frame interrupt

- **UFLWID: FIFO underflow interrupt disable**

0: No effect

1: Disable FIFO underflow interrupt

- **OWRID: FIFO overwrite interrupt disable**

0: No effect

1: Disable FIFO overwrite interrupt

- **MERID: DMA Memory error interrupt disable**

0: No effect

1: Disable DMA Memory error interrupt

45.12.30 LCD Interrupt Mask Register

Name: LCD_IMR

Address:0x00500850

Access: Read-only

Reset value: 0x0

31	30	29	28	27	26	25	24
–	–	–	–	–	–	–	–
23	22	21	20	19	18	17	16
–	–	–	–	–	–	–	–
15	14	13	12	11	10	9	8
–	–	–	–	–	–	–	–
7	6	5	4	3	2	1	0
–	MERIM	OWRIM	UFLWIM	–	EOFIM	LSTLNIM	LNIM

- **LNIM: Line interrupt mask**

0: Line Interrupt disabled

1: Line interrupt enabled

- **LSTLNIM: Last line interrupt mask**

0: Last Line Interrupt disabled

1: Last Line Interrupt enabled

- **EOFIM: DMA End of frame interrupt mask**

0: End Of Frame interrupt disabled

1: End Of Frame interrupt enabled

- **UFLWIM: FIFO underflow interrupt mask**

0: FIFO underflow interrupt disabled

1: FIFO underflow interrupt enabled

- **OWRIM: FIFO overwrite interrupt mask**

0: FIFO overwrite interrupt disabled

1: FIFO overwrite interrupt enabled

- **MERIM: DMA Memory error interrupt mask**

0: DMA Memory error interrupt disabled

1: DMA Memory error interrupt enabled

45.12.31 LCD Interrupt Status Register

Name: LCD_ISR

Address:0x00500854

Access: Read-only

Reset value: 0x0

31	30	29	28	27	26	25	24
–	–	–	–	–	–	–	–
23	22	21	20	19	18	17	16
–	–	–	–	–	–	–	–
15	14	13	12	11	10	9	8
–	–	–	–	–	–	–	–
7	6	5	4	3	2	1	0
–	MERIS	OWRIS	UFLWIS	–	EOFIS	LSTLNIS	LNIS

- **LNIS: Line interrupt status**

0: Line Interrupt not active

1: Line Interrupt active

- **LSTLNIS: Last line interrupt status**

0: Last Line Interrupt not active

1: Last Line Interrupt active

- **EOFIS: DMA End of frame interrupt status**

0: End Of Frame interrupt not active

1: End Of Frame interrupt active

- **UFLWIS: FIFO underflow interrupt status**

0: FIFO underflow interrupt not active

1: FIFO underflow interrupt active

- **OWRIS: FIFO overwrite interrupt status**

0: FIFO overwrite interrupt not active

1: FIFO overwrite interrupt active

- **MERIS: DMA Memory error interrupt status**

0: DMA Memory error interrupt not active

1: DMA Memory error interrupt active

45.12.32 LCD Interrupt Clear Register

Name: LCD_ICR

Address:0x00500858

Access: Write-only

Reset value: 0x0

31	30	29	28	27	26	25	24
–	–	–	–	–	–	–	–
23	22	21	20	19	18	17	16
–	–	–	–	–	–	–	–
15	14	13	12	11	10	9	8
–	–	–	–	–	–	–	–
7	6	5	4	3	2	1	0
–	MERIC	OWRIC	UFLWIC	–	EOFIC	LSTLNIC	LNIC

- **LNIC: Line interrupt clear**

0: No effect

1: Clear each line interrupt

- **LSTLNIC: Last line interrupt clear**

0: No effect

1: Clear Last line Interrupt

- **EOFIC: DMA End of frame interrupt clear**

0: No effect

1: Clear End Of Frame interrupt

- **UFLWIC: FIFO underflow interrupt clear**

0: No effect

1: Clear FIFO underflow interrupt

- **OWRIC: FIFO overwrite interrupt clear**

0: No effect

1: Clear FIFO overwrite interrupt

- **MERIC: DMA Memory error interrupt clear**

0: No effect

1: Clear DMA Memory error interrupt

45.12.33 LCD Interrupt Test Register

Name: LCD_ITR

Address:0x00500860

Access: Write-only

Reset value: 0x0

31	30	29	28	27	26	25	24
–	–	–	–	–	–	–	–
23	22	21	20	19	18	17	16
–	–	–	–	–	–	–	–
15	14	13	12	11	10	9	8
–	–	–	–	–	–	–	–
7	6	5	4	3	2	1	0
–	MERIT	OWRIT	UFLWIT	–	EOFIT	LSTLNIT	LNIT

- **LNIT: Line interrupt test**

0: No effect

1: Set each line interrupt

- **LSTLNIT: Last line interrupt test**

0: No effect

1: Set Last line interrupt

- **EOFIT: DMA End of frame interrupt test**

0: No effect

1: Set End Of Frame interrupt

- **UFLWIT: FIFO underflow interrupt test**

0: No effect

1: Set FIFO underflow interrupt

- **OWRIT: FIFO overwrite interrupt test**

0: No effect

1: Set FIFO overwrite interrupt

- **MERIT: DMA Memory error interrupt test**

0: No effect

1: Set DMA Memory error interrupt

45.12.34 LCD Interrupt Raw Status Register

Name: LCD_IRR

Address:0x00500864

Access: Write-only

Reset value: 0x0

31	30	29	28	27	26	25	24
–	–	–	–	–	–	–	–
23	22	21	20	19	18	17	16
–	–	–	–	–	–	–	–
15	14	13	12	11	10	9	8
–	–	–	–	–	–	–	–
7	6	5	4	3	2	1	0
–	MERIR	OWRIR	UFLWIR	–	EOFIR	LSTLNIR	LNIR

- **LNIR: Line interrupt raw status**

0: No effect

1: Line interrupt condition present

- **LSTLNIR: Last line interrupt raw status**

0: No effect

1: Last line Interrupt condition present

- **EOFIR: DMA End of frame interrupt raw status**

0: No effect

1: End Of Frame interrupt condition present

- **UFLWIR: FIFO underflow interrupt raw status**

0: No effect

1: FIFO underflow interrupt condition present

- **OWRIR: FIFO overwrite interrupt raw status**

0: No effect

1: FIFO overwrite interrupt condition present

- **MERIR: DMA Memory error interrupt raw status**

0: No effect

1: DMA Memory error interrupt condition present

45.12.35 LCD Write Protect Mode Register

Register Name: LCD_WPMR

Access Type: Read-write

31	30	29	28	27	26	25	24
WPKEY							

23	22	21	20	19	18	17	16
WPKEY							

15	14	13	12	11	10	9	8
WPKEY							

7	6	5	4	3	2	1	0
—	—	—	—	—	—	—	WPEN

- **WPEN: Write Protect Enable**

0 = Disables the Write Protect if WPKEY corresponds to0x4C4344 ("LCD" in ASCII).

1 = Enables the Write Protect if WPKEY corresponds to0x4C4344 ("LCD" in ASCII).

Protects the registers:

- “LCD Control Register 1” on page 1087
- “LCD Control Register 2” on page 1088
- “LCD Timing Configuration Register 1” on page 1090
- “LCD Timing Configuration Register 2” on page 1091
- “LCD Frame Configuration Register” on page 1092
- “LCD FIFO Register” on page 1093
- “LCDMOD Toggle Rate Value Register” on page 1094
- “Dithering Pattern DP1_2 Register” on page 1095
- “Dithering Pattern DP4_7 Register” on page 1095
- “Dithering Pattern DP3_5 Register” on page 1096
- “Dithering Pattern DP2_3 Register” on page 1096
- “Dithering Pattern DP5_7 Register” on page 1097
- “Dithering Pattern DP3_4 Register” on page 1097
- “Dithering Pattern DP4_5 Register” on page 1098
- “Dithering Pattern DP6_7 Register” on page 1099

- **WPKEY: Write Protect KEY**

Should be written at value 0x4C4344 ("LCD" in ASCII). Writing any other value in this field aborts the write operation of the WPEN bit. Always reads as 0.

45.12.36 LCD Write Protect Status Register

Register Name: LCD_WPSR

Address: 0x005008E8

Access Type: Read-only

31	30	29	28	27	26	25	24
—	—	—	—	—	—	—	—

23	22	21	20	19	18	17	16
WPVSRC							

15	14	13	12	11	10	9	8
WPVSRC							

7	6	5	4	3	2	1	0
—	—	—	—	—	—	—	WPVS

- **WPVS: Write Protect Enable**

0 = No Write Protect Violation has occurred since the last read of the LCD_WPSR register.

1 = A Write Protect Violation occurred since the last read of the LCD_WPSR register. If this violation is an unauthorized attempt to write a protected register, the associated violation is reported into field WPVSRC.

- **WPVSRC: Write Protect Violation Source**

When WPVS is active, this field indicates the write-protected register (through address offset or code) in which a write access has been attempted.

Note: Reading LCD_WPSR automatically clears all fields

46. SAM9G45 Electrical Characteristics

46.1 Absolute Maximum Ratings

Table 46-1. Absolute Maximum Ratings*

Operating Temperature (Industrial).....-40°C to + 85°C

Junction Temperature.....125°C

Storage Temperature.....-60°C to + 150°C

Voltage on Input Pins
with Respect to Ground.....-0.3V to VDDIO+0.3V(+ 4V max)

Maximum Operating Voltage
(VDDCORE, VDDPLLA, VDDUTMIC, VDDPLLUTMI)....1.2V

(VDDIOM0).....2.0V

(VDDIOM1, VDDIOPx, VDDUTMII, VDDOSC, VDDANA and VDDBU).....4.0V

Total DC Output Current on all I/O lines.....350 mA

*NOTICE: Stresses beyond those listed under “Absolute Maximum Ratings” may cause permanent damage to the device. This is a stress rating only and functional operation of the device at these or other conditions beyond those indicated in the operational sections of this specification is not implied. Exposure to absolute maximum rating conditions for extended periods may affect device reliability.

46.2 DC Characteristics

The following characteristics are applicable to the operating temperature range: T_A = -40°C to +85°C, unless otherwise specified.

Table 46-2. DC Characteristics

Symbol	Parameter	Conditions	Min	Typ	Max	Units
$V_{VDDCORE}$	DC Supply Core		0.9	1.0	1.1	V
$V_{VDDCORErip}$	VDDCORE ripple				20	mVrms
$V_{VDDUTMIC}$	DC Supply UDPHS and UHPHS UTMI+ Core		0.9	1.0	1.1	V
$V_{VDDUTMII}$	DC Supply UDPHS and UHPHS UTMI+ Interface		3.0	3.3	3.6	V
V_{VDDBU}	DC Supply Backup		1.8		3.6	V
$V_{VDDBUrip}$	VDDBU ripple				30	mVrms
$V_{VDDPLLA}$	DC Supply PLLA		0.9	1.0	1.1	V
$V_{VDDPLLArip}$	VDDPLLA ripple				10	mVrms
$V_{VDDPLLUTMI}$	DC Supply PLLUTMI		0.9	1.0	1.1	V
$V_{VDDPLLUTMIrip}$	VDDPLLUTMI ripple				10	mVrms
V_{VDDOSC}	DC Supply Oscillator		1.65		3.6	V
$V_{VDDOSCrip}$	VDDOSC ripple				30	mVrms
$V_{VDDIOM0}$	DC Supply DDR I/Os		1.65	1.8	1.95	V

Table 46-2. DC Characteristics (Continued)

$V_{VDDIOM1}$	DC Supply EBI I/Os		1.65/3.0	1.8/3.3	1.95/3.6	V
$V_{VDDIOP0}$	DC Supply Peripheral I/Os		1.65		3.6	V
$V_{VDDIOP1}$	DC Supply Peripheral I/Os		1.65		3.6	V
$V_{VDDIOP2}$	DC Supply ISI		1.65		3.6	V
V_{VDDANA}	DC Supply Analog		3.0	3.3	3.6	V
V_{IL}	Input Low-level Voltage	V_{VDDIO} from 3.0V to 3.6V	-0.3		0.8	V
		V_{VDDIO} from 1.65V to 1.95V	-0.3		0.3 x V_{VDDIO}	V
V_{IH}	Input High-level Voltage	V_{VDDIO} from 3.0V to 3.6V	2		V_{VDDIO} + 0.3	V
		V_{VDDIO} from 1.65V to 1.95V	0.7 x V_{VDDIO}		V_{VDDIO} + 0.3	V
V_{OL}	Output Low-level Voltage	I_O Max, V_{VDDIO} from 3.0V to 3.6V			0.4	V
		CMOS (I_O <0.3 mA), V_{VDDIO} from 1.65V to 1.95V			0.1	V
		TTL (I_O Max), V_{VDDIO} from 1.65V to 1.95V			0.4	V
V_{OH}	Output High-level Voltage	I_O Max, V_{VDDIO} from 3.0V to 3.6V	V_{VDDIO} - 0.4			V
		CMOS (I_O <0.3 mA), V_{VDDIO} from 1.65V to 1.95V	V_{VDDIO} - 0.1			V
		TTL (I_O Max), V_{VDDIO} from 1.65V to 1.95V	V_{VDDIO} - 0.4			V
V_{T-}	Schmitt trigger Negative going threshold Voltage	I_O Max, V_{VDDIO} from 3.0V to 3.6V	0.8	1.1		V
		TTL (I_O Max), V_{VDDIO} from 1.65V to 1.95V			0.3 x V_{VDDIO}	V
V_{T+}	Schmitt trigger Positive going threshold Voltage	I_O Max, V_{VDDIO} from 3.0V to 3.6V		1.6	2.0	V
		TTL (I_O Max), V_{VDDIO} from 1.65V to 1.95V	0.3 x V_{VDDIO}			V
V_{HYS}	Schmitt trigger Hysteresis	V_{VDDIO} from 3.0V to 3.6V	0.5		0.75	V
		V_{VDDIO} from 1.65V to 1.95V	0.28		0.6	V
R_{PULLUP}	Pull-up Resistance	PA0-PA31 PB0-PB31 PD0-PD31 PE0-PE31 NTRST and NRST	40	75	190	kΩ
		PC0-PC31 $V_{VDDIOM1}$ In 1.8V range	240		1000	
		PC0-PC31 $V_{VDDIOM1}$ In 3.3V range	120		350	
I_O	Output Current	PA0-PA31 PB0-PB31 PD0-PD31 PE0-PE31			8	mA
		PC0-PC31 $V_{VDDIOM1}$ In 1.8V range			2	
		PC0-PC31 $V_{VDDIOM1}$ In 3.3V range			4	

Table 46-2. DC Characteristics (Continued)

I_{SC}	Static Current	On $V_{VDDCORE}$ = 1.0V, MCK = 0 Hz, excluding POR	T_A = 25°C		30		mA
		All inputs driven TMS, TDI, TCK, NRST = 1	T_A = 85°C			120	
		On V_{VDDBU} = 3.3V, Logic cells consumption, excluding POR	T_A = 25°C		9		µA
		All inputs driven WKUP = 0	T_A = 85°C			25	

46.3 Power Consumption

- Typical power consumption of PLLs, Slow Clock and Main Oscillator.
- Power consumption of power supply in four different modes: Active, Idle, Ultra Low-power and Backup.
- Power consumption by peripheral: calculated as the difference in current measurement after having enabled then disabled the corresponding clock.

46.3.1 Power Consumption versus Modes

The values in Table 46-3 and Table 46-4 on page 1114 are estimated values of the power consumption with operating conditions as follows:

- V_{DDIOM0} = 1.8V
- $V_{DDIOP0 \text{ and } 1}$= 3.3V
- V_{DDPLLA} = 1.0V
- V_{DDCORE} = 1.0V
- V_{DDBU} = 3.3V
- T_A = 25°C
- There is no consumption on the I/Os of the device

Figure 46-1. Measures Schematics

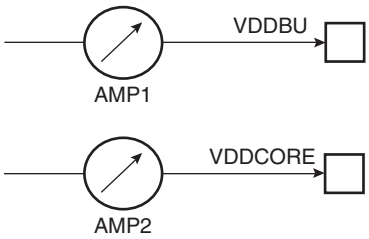

These figures represent the power consumption estimated on the power supplies.

Table 46-3. Power Consumption for Different Modes

Mode	Conditions	Consumption	Unit
Active	ARM Core clock is 400 MHz. MCK is 133 MHz. All peripheral clocks activated. onto AMP2	130	mA
Idle	Idle state, waiting an interrupt. All peripheral clocks de-activated. onto AMP2	55	mA
Ultra low power	ARM Core clock is 500 Hz. All peripheral clocks de-activated. onto AMP2	30	mA
Backup	Device only V_{DDBU} powered onto AMP1	8	µA

Table 46-4. Power Consumption by Peripheral in Active Mode

Peripheral	Consumption	Unit
PIO Controller	2.2	µA/MHz
USART	7.2	
UHPHS	53.2	
UDPHS	21.7	
TSADC	0.1	
TWI	1.3	
SPI	4.7	
PWM	3.8	
HSMCI	25.6	
AC97	5.3	
SSC	6.6	
Timer Counter Channels	6.9	
ISI	4.8	
LCD	20.4	
DMA	0.2	
EMAC	34.8	
TRNG	0.9	

46.4 Clock Characteristics

46.4.1 Processor Clock Characteristics

Table 46-5. Processor Clock Waveform Parameters

Symbol	Parameter	Conditions	Min	Max	Units
$1/(t_{CPPCK})$	Processor Clock Frequency	VDDCORE = 0.9V T = 85°C	125[1]	400	MHz

46.4.2 Master Clock Characteristics

Table 46-6. Master Clock Waveform Parameters

Symbol	Parameter	Conditions	Min	Max	Units
$1/(t_{CPMCK})$	Master Clock Frequency	VDDCORE = 0.9V T = 85°C	125[1]	133	MHz

The master clock is the maximum clock at which the system is able to run. It is given by the smallest value of the internal bus clock and EBI clock.

Note: 1. For DDR2 usage, there are no limitations to LDDDR, SDRAM and mobile SDRAM.

46.5 Main Oscillator Characteristics

Table 46-7. Main Oscillator Characteristics

Symbol	Parameter	Conditions	Min	Typ	Max	Unit
$1/(t_{CPMAIN})$	Crystal Oscillator Frequency		8	12	16	MHz
$C_{CRYSTAL}$[1]	Crystal Load Capacitance		15		20	pF
C_{INT}[1]	Internal Load Capacitance			4		pF
C_{LEXT}	External Load Capacitance	$C_{CRYSTAL}$ = 15 pF[1]		22		pF
		$C_{CRYSTAL}$ = 20 pF[1]		32		Pf
	Duty Cycle		40	50	60	%
t_{ST}	Startup Time				2	ms
I_{DDST}	Standby Current Consumption	Standby mode			1	µA
P_{ON}	Drive Level				150	µW
$I_{DD\ ON}$	Current Dissipation	@ 8 MHz	0.35		0.55	mA
		@ 16 MHz	0.7		1.1	mA

Note: 1. The $C_{CRYSTAL}$ value is specified by the crystal manufacturer. In our case, $C_{CRYSTAL}$ must be between 15 pf and 20 pF. All parasitic capacitance, package and board, **must be calculated** in order to reach 15 pF (minimum targeted load for the oscillator) by taking into account the internal load C_{INT}. So, to target the minimum oscillator load of 15 pF, external capacitance must be: 15 pF - 4 pF = 11 pF which means that 22 pF is the target value (22 pF from xin to gndosc and 22 pF from xout to gndosc) If 20 pF load is targeted, the sum of pad, package, board and external capacitances must be 20 pF - 4 pF = 16 pF which means 32 pF (32 pF from xin to gndosc and 32 pF from xout to gndosc).

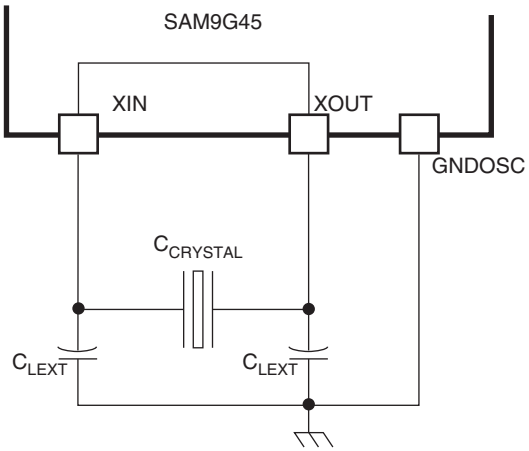

46.5.1 Crystal Oscillator Characteristics

The following characteristics are applicable to the operating temperature range: T_A = -40°C to 85°C and worst case of power supply, unless otherwise specified.

Table 46-8. Crystal Characteristics

Symbol	Parameter	Conditions	Min	Typ	Max	Unit
ESR	Equivalent Series Resistor Rs				80	Ω
C_M	Motional Capacitance				9	fF
C_S	Shunt Capacitance				7	pF

46.5.2 XIN Clock Characteristics

Table 46-9. XIN Clock Electrical Characteristics

Symbol	Parameter	Conditions	Min	Max	Units
$1/(t_{CPXIN})$	XIN Clock Frequency			50	MHz
t_{CPXIN}	XIN Clock Period		20		ns
t_{CHXIN}	XIN Clock High Half-period		0.4 x t_{CPXIN}	0.6 x t_{CPXIN}	ns
t_{CLXIN}	XIN Clock Low Half-period		0.4 x t_{CPXIN}	0.6 x t_{CPXIN}	ns
C_{IN}	XIN Input Capacitance	(1)		25	pF
R_{IN}	XIN Pulldown Resistor	(1)		500	kΩ
V_{IN}	XIN Voltage	(1)	VDDOSC	VDDOSC	V

Note: 1. These characteristics apply only when the Main Oscillator is in bypass mode (i.e. when MOSCEN = 0 and OSCBYPASS = 1) in the CKGR_MOR register. See “PMC Clock Generator Main Oscillator Register” in the PMC section.

46.6 32 kHz Oscillator Characteristics

Table 46-10. 32 kHz Oscillator Characteristics

Symbol	Parameter	Conditions		Min	Typ	Max	Unit
$1/(t_{CP32KHz})$	Crystal Oscillator Frequency				32 768		kHz
$C_{CRYSTAL32}$	Load Capacitance	Crystal @ 32.768 kHz		6		12.5	pF
C_{LEXT32}[2]	External Load Capacitance	$C_{CRYSTAL32}$ = 6 pF			6		pF
		$C_{CRYSTAL32}$ = 12.5 pF			19		pF
	Duty Cycle			40		60	%
t_{ST}	Startup Time	R_S = 50 kΩ[1]	$C_{CRYSTAL32}$ = 6 pF			400	ms
			$C_{CRYSTAL32}$ = 12.5 pF			900	ms
		R_S = 100 kΩ[1]	$C_{CRYSTAL32}$ = 6 pF			600	ms
			$C_{CRYSTAL32}$ = 12.5 pF			1200	ms

Notes: 1. R_S is the equivalent series resistance.
2. C_{LEXT32} is determined by taking into account internal, parasitic and package load capacitance.

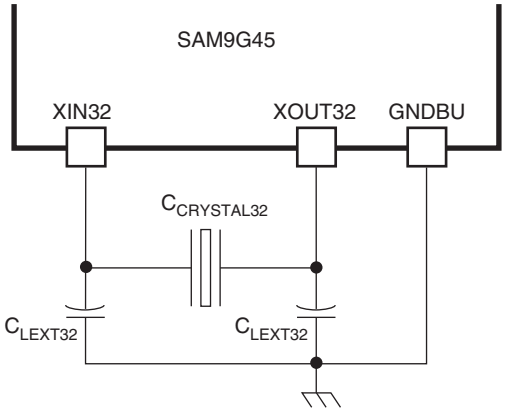

46.6.1 32 kHz Crystal Characteristics

Table 46-11. 32 kHz Crystal Characteristics

Symbol	Parameter	Conditions	Min	Typ	Max	Unit
ESR	Equivalent Series Resistor Rs	Crystal @ 32.768 kHz		50	100	kΩ
C_M	Motional Capacitance	Crystal @ 32.768 kHz			3	fF
C_S	Shunt Capacitance	Crystal @ 32.768 kHz			2	pF

46.6.2 XIN32 Clock Characteristics

Table 46-12. XIN32 Clock Electrical Characteristics

Symbol	Parameter	Conditions	Min	Max	Units
$1/(t_{CPXIN32})$	XIN32 Clock Frequency			44	kHz
$t_{CPXIN32}$	XIN32 Clock Period		22		µs
$t_{CHXIN32}$	XIN32 Clock High Half-period		11		µs
$t_{CLXIN32}$	XIN32 Clock Low Half-period		11		µs
t_{CLCH32}	XIN32 Clock Rise time		400		ns
t_{CLCL32}	XIN32 Clock Fall time		400		ns
C_{IN32}	XIN32 Input Capacitance	(1)		6	pF
R_{IN32}	XIN32 Pulldown Resistor	(1)		4	MΩ
V_{IN32}	XIN32 Voltage	(1)	VDDBU	VDDBU	V
V_{INIL32}	XIN32 Input Low Level Voltage	(1)	-0.3	$0.3 \times V_{VDDBU}$	V
V_{INIH32}	XIN32 Input High Level Voltage	(1)	$0.7 \times V_{VDDBU}$	$V_{VDDBU} + 0.3$	V

Note: 1. These characteristics apply only when the 32.768 kHz Oscillator is in bypass mode (i.e. when RCEN = 0, OSC32EN = 0, OSCSEL = 1 and OSC32BYP = 1) in the SCKCR register. See “Slow Clock Selection” in the PMC section.

46.7 32 kHz RC Oscillator Characteristics

Table 46-13. RC Oscillator Characteristics

Symbol	Parameter	Conditions	Min	Typ	Max	Unit
$1/(t_{CPRCz})$	Crystal Oscillator Frequency		22		42	kHz
	Duty Cycle		45		55	%
t_{ST}	Startup Time				75	µs

46.8 PLL Characteristics

Table 46-14. PLLA Characteristics

Symbol	Parameter	Conditions	Min	Typ	Max	Unit
F_{OUT}	Output Frequency	Refer to following table	400		800	MHz
F_{IN}	Input Frequency		2		32	MHz
I_{PLL}	Current Consumption	Active mode		7	9	mA
		Standby mode			1	µA
T	Startup Time				50	µs

The following configuration of ICPLLA and OUTA must be done for each PLLA frequency range.

Table 46-15. PLLA Frequency Regarding ICPLLA and OUTA

PLL Frequency Range (MHz)	ICPLLA	OUTA	
745 - 800	0	0	0
695 - 750	0	0	1
645 - 700	0	1	0
595 - 650	0	1	1
545 - 600	1	0	0
495 - 550	1	0	1
445 - 500	1	1	0
400 - 450	1	1	1

46.8.1 UTMI PLL Characteristics

Table 46-16. Phase Lock Loop Characteristics

Symbol	Parameter	Conditions	Min	Typ	Max	Unit
F_{IN}	Input Frequency		4	12	32	MHz
F_{OUT}	Output Frequency		450	480	600	MHz
I_{PLL}	Current Consumption	active mode		5	8	mA
		standby mode			1.5	µA
T	Startup Time				50	µs

46.9 I/Os

Criteria used to define the maximum frequency of the I/Os:

- Output duty cycle (40%-60%)
- Minimum output swing: 100 mV to VDDIO - 100 mV
- Addition of rising and falling time inferior to 75% of the period

Table 46-17. I/O Characteristics

Symbol	Parameter	Conditions		Min	Max	Units
FreqMax	VDDIOP powered Pins frequency	3.3V domain (1)	Max. external load = 20 pF Max. external load = 40 pF		66 34	MHz
		1.8V domain(2)	Max. external load = 20 pF Max. external load = 40 pF		35 18	MHz

Notes: 1. V_{VDDIOP} from 3.0V to 3.6V
2. V_{VDDIOP} from 1.65V to 1.95V

46.10 USB HS Characteristics

46.10.1 Electrical Characteristics

Table 46-18. Electrical Parameters

Symbol	Parameter	Conditions	Min	Typ	Max	Unit
R_{PUI}	Bus Pull-up Resistor on Upstream Port (idle bus)	in LS or FS Mode		1.5		kΩ
R_{PUA}	Bus Pull-up Resistor on Upstream Port (upstream port receiving)	in LS or FS Mode		15		kΩ
Setting time						
T_{BIAS}	Bias settling time				20	µs
T_{OSC}	Oscillator settling time	With Crystal 12 MHz			2	ms
$T_{SETTLING}$	Settling time	F_{IN} = 12 MHz		0.3	0.5	ms

46.10.2 Static Power Consumption

Table 46-19. Static Power Consumption

Symbol	Parameter	Conditions	Min	Typ	Max	Unit
I_{BIAS}	Bias current consumption on VBG				1	µA
$I_{VDDUTMII}$	HS Transceiver and I/O current consumption				8	µA
	LS / FS Transceiver and I/O current consumption	no connection(1)			3	µA
$I_{VDDUTMIC}$	Core, PLL, and Oscillator current consumption				2	µA

Note: 1. If cable is connected add 200 µA (Typical) due to Pull-up/Pull-down current consumption.

46.10.3 Dynamic Power Consumption

Table 46-20. Dynamic Power Consumption

Symbol	Parameter	Conditions	Min	Typ	Max	Unit
I_{BIAS}	Bias current consumption on VBG			0.7	0.8	mA
$I_{VDDUTMII}$	HS Transceiver current consumption	HS transmission		47	60	mA
	HS Transceiver current consumption	HS reception		18	27	mA
	LS / FS Transceiver current consumption	FS transmission 0m cable(1)		4	6	mA
	LS / FS Transceiver current consumption	FS transmission 5m cable(1)		26	30	mA
	LS / FS Transceiver current consumption	FS reception(1)		3	4.5	mA
$I_{VDDUTMIC}$	PLL, Core and Oscillator current consumption			5.5	9	mA

Note: 1. Including 1mA due to Pull-up/Pull-down current consumption.

46.11 Touch Screen ADC (TSADC)

Table 46-21. Channel Conversion Time and ADC Clock

Parameter	Conditions	Min	Typ	Max	Units
ADC Clock Frequency	10-bit resolution mode			13.2	MHz
Startup Time	Return from Idle Mode			40	µs
Track and Hold Acquisition Time (TTH)	ADC Clock = 13.2 MHz[(1)]	0.5			µs
Conversion Time (TCT)	ADC Clock = 13.2 MHz[(1)]			1.75	µs
Throughput Rate	ADC Clock = 13.2 MHz[(1)]			440	kSPS

Note: 1. The Track and Hold Acquisition Time is given by:

$$\text{TTH (ns)} = 500 + (0.12 \times Z_{IN})(\Omega)$$

The ADC internal clock is divided by 2 in order to generate a clock with a duty cycle of 75%. So the maximum conversion time is give by:

$$\text{TCT}(\mu s) = \frac{23}{\text{Fclk}}(\text{MHz})$$

The full speed is obtained for an input source impedance of < 50 Ohms maximum, or TTH = 500 ns.
In order to make the TSADC work properly, the SHTIM field in TSADCC Mode Register is to be calculated according to this Track and Hold Acquisition Time, also called Sampled and Hold Time.

Table 46-22. External Voltage Reference Input

Parameter	Conditions	Min	Typ	Max	Units
ADVREF Input Voltage Range		2.4		VDDANA	V
ADVREF Average Current				600	µA
Current Consumption on VDDANA				300	µA

Table 46-23. Analog Inputs

Parameter	Min	Typ	Max	Units
Input Voltage Range	0		ADVREF	V
Input Leakage Current			1	µA
Input Capacitance		7	10	pF
Input Source Impedance		50		Ohms

Table 46-24. Transfer Characteristics

Parameter	Min	Typ	Max	Units
Resolution		10		bit
Integral Non-linearity			±2	LSB
Differential Non-linearity	-0.9		+0.9	LSB
Offset Error	-1.5	0.5	±10	mV
Gain Error			±2	LSB

46.12 Core Power Supply POR Characteristics

Table 46-25. Power-On-Reset Characteristics

Symbol	Parameter	Conditions	Min	Typ	Max	Units
V_{th+}	Threshold Voltage Rising	Minimum Slope of +2.0V/30ms	0.5	0.7	0.89	V
V_{th-}	Threshold Voltage Falling		0.4	0.6	0.85	V
T_{RES}	Reset Time		30	70	130	µs

46.12.1 Power Sequence Requirements

The SAM9G45 board design must comply with the power-up guidelines below to guarantee reliable operation of the device. Any deviation from these sequences may prevent the device from booting.

46.12.2 Power-Up Sequence

Figure 46-2. VDDCORE and VDDIO Constraints at Startup

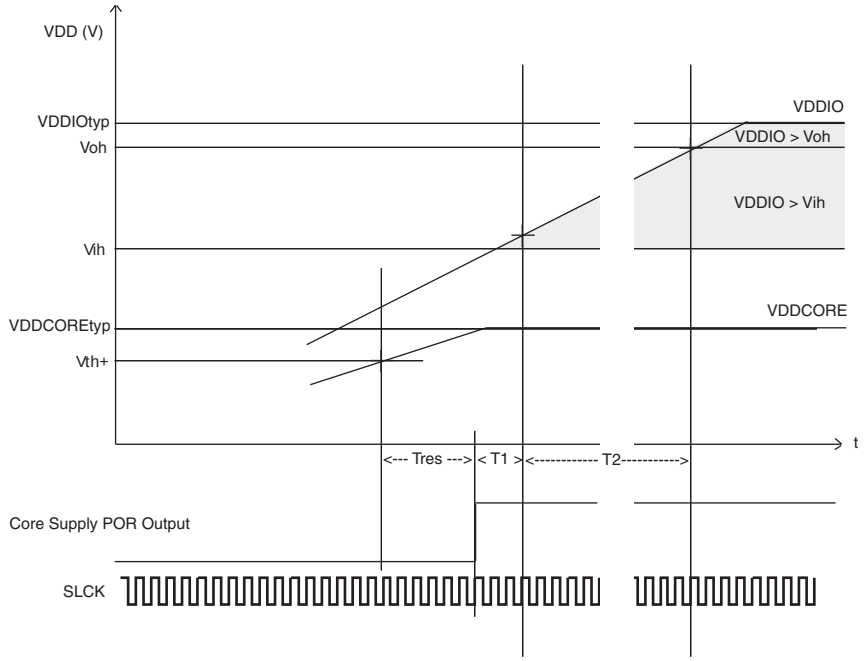

VDDCORE and VDDBU are controlled by internal POR (Power-On-Reset) to guarantee that these power sources reach their target values prior to the release of POR.

- VDDIOP must be ≥ V_{IH} (refer to DC characteristics, Table 46-2, for more details) within (Tres + T1) after VDDCORE has reached V_{th+}.
- VDDIOM must reach V_{OH} (refer to DC characteristics, Table 46-2, for more details) within (Tres +T1 +T2) after VDDCORE has reached V_{th+}
  - T_{RES} is a POR characteristic
  - T1 = 3 x T_{SLCK}
  - T2 = 16 x T_{SLCK}

The T_{SLCK} min (22 µs) is obtained for the maximum frequency of the internal RC oscillator (44 kHz).

  - T_{RES} = 30 µs

– T1 = 66 µs

– T2 = 352 µs

As a conclusion, establish VDDIOP and VDDIOM first, and VDDCORE at last to ensure a reliable operation of the device. VDDOSC, VDDPLL, VDDUTMII and VDDUTMIC must be stated at any time but before VDDCORE to ensure a correct behaviour of the ROM code.

46.13 SMC Timings

46.13.1 Timing Conditions

SMC Timings are given for MAX corners.

Timings are given assuming a capacitance load on data, control and address pads:

Table 46-26. Capacitance Load

	Corner	
Supply	MAX	MIN
3.3V	50pF	5 pF
1.8V	30 pF	5 pF

In the following tables, t_{CPMCK} is MCK period.

46.13.2 Timing Extraction

46.13.2.1 Zero Hold Mode Restrictions

Table 46-27. Zero Hold Mode Use Maximum system clock frequency (MCK)

Symbol	**Parameter**	**Min**		**Units**
	VDDIOM supply	**1.8V**	**3.3V**	
Zero Hold Mode Use				
Fmax	MCK frequency	66	66	MHz

46.13.2.2 Read Timings

Table 46-28. SMC Read Signals - NRD Controlled (READ_MODE= 1)

Symbol	**Parameter**	**Min**		**Units**
	VDDIOM supply	**1.8V**	**3.3V**	
NO HOLD SETTINGS (nrd hold = 0)				
SMC_1	Data Setup before NRD High	12.0	11.2	ns
SMC_2	Data Hold after NRD High	0	0	ns
HOLD SETTINGS (nrd hold ≠ 0)				
SMC_3	Data Setup before NRD High	8.7	8.2	ns
SMC_4	Data Hold after NRD High	0	0	ns
HOLD or NO HOLD SETTINGS (nrd hold ≠ 0, nrd hold =0)				

Table 46-28. SMC Read Signals - NRD Controlled (READ_MODE= 1) (Continued)

SMC_5	NBS0/A0, NBS1, NBS2/A1, NBS3, A2 - A25 Valid before NRD High	(nrd setup + nrd pulse)* t_{CPMCK} - 15.4	(nrd setup + nrd pulse)* t_{CPMCK} - 15.5	ns
SMC_6	NCS low before NRD High	(nrd setup + nrd pulse - ncs rd setup) * t_{CPMCK} -14.7	(nrd setup + nrd pulse - ncs rd setup) * t_{CPMCK} - 14.7	ns
SMC_7	NRD Pulse Width	nrd pulse * t_{CPMCK} - 0.5	nrd pulse * t_{CPMCK} - 0.2	ns

Table 46-29. SMC Read Signals - NCS Controlled (READ_MODE= 0)

Symbol	Parameter	Min		Units
	VDDIOM supply	**1.8V**	**3.3V**	
NO HOLD SETTINGS (ncs rd hold = 0)				
SMC_8	Data Setup before NCS High	15.0	14.1	ns
SMC_9	Data Hold after NCS High	0	0	ns
HOLD SETTINGS (ncs rd hold ≠ 0)				
SMC_{10}	Data Setup before NCS High	11.4	10.9	ns
SMC_{11}	Data Hold after NCS High	0	0	ns
HOLD or NO HOLD SETTINGS (ncs rd hold ≠ 0, ncs rd hold = 0)				
SMC_{12}	NBS0/A0, NBS1, NBS2/A1, NBS3, A2 - A25 valid before NCS High	(ncs rd setup + ncs rd pulse)* t_{CPMCK} - 3.7	(ncs rd setup + ncs rd pulse)* t_{CPMCK} - 4.4	ns
SMC_{13}	NRD low before NCS High	(ncs rd setup + ncs rd pulse - nrd setup)* t_{CPMCK} - 0.8	(ncs rd setup + ncs rd pulse - nrd setup)* t_{CPMCK} - 1.1	ns
SMC_{14}	NCS Pulse Width	ncs rd pulse length * t_{CPMCK} - 0.5	ncs rd pulse length * t_{CPMCK} - 0.2	ns

46.13.2.3 Write Timings

Table 46-30. SMC Write Signals - NWE Controlled (WRITE_MODE = 1)

Symbol	Parameter	Min		Units
		1.8V Supply	**3.3V Supply**	
HOLD or NO HOLD SETTINGS (nwe hold ≠ 0, nwe hold = 0)				
SMC_{15}	Data Out Valid before NWE High	nwe pulse * t_{CPMCK} - 2.9	nwe pulse * t_{CPMCK} - 3.6	ns
SMC_{16}	NWE Pulse Width	nwe pulse * t_{CPMCK} - 0.7	nwe pulse * t_{CPMCK} - 0.3	ns
SMC_{17}	NBS0/A0 NBS1, NBS2/A1, NBS3, A2 - A25 valid before NWE low	nwe setup * t_{CPMCK} - 3.3	nwe setup * t_{CPMCK} - 4.1	ns
SMC_{18}	NCS low before NWE high	(nwe setup - ncs rd setup + nwe pulse) * t_{CPMCK} - 3.1	(nwe setup - ncs rd setup + nwe pulse) * t_{CPMCK} - 3.4	ns
HOLD SETTINGS (nwe hold ≠ 0)				
SMC_{19}	NWE High to Data OUT, NBS0/A0 NBS1, NBS2/A1, NBS3, A2 - A25 change	nwe hold * t_{CPMCK} - 4.0	nwe hold * t_{CPMCK} - 4.6	ns

Table 46-30. SMC Write Signals - NWE Controlled (WRITE_MODE = 1) (Continued)

Symbol	Parameter	Min		Units
		1.8V Supply	3.3V Supply	
SMC_{20}	NWE High to NCS Inactive [(1)]	(nwe hold - ncs wr hold)* t_{CPMCK} - 3.2	(nwe hold - ncs wr hold)* t_{CPMCK} - 4.0	ns
NO HOLD SETTINGS (nwe hold = 0)				
SMC_{21}	NWE High to Data OUT, NBS0/A0 NBS1, NBS2/A1, NBS3, A2 - A25, NCS change[(1)]	1.6	1.4	ns

Notes: 1. hold length = total cycle duration - setup duration - pulse duration. “hold length” is for “ncs wr hold length” or “NWE hold length”.

)

Table 46-31. SMC Write NCS Controlled (WRITE_MODE = 0)

Symbol	Parameter	Min		Units
		1.8V Supply	3.3V Supply	
SMC_{22}	Data Out Valid before NCS High	ncs wr pulse * t_{CPMCK} - 2.8	ncs wr pulse * t_{CPMCK} - 3.5	ns
SMC_{23}	NCS Pulse Width	ncs wr pulse * t_{CPMCK} - 0.5	ncs wr pulse * t_{CPMCK} - 0.2	ns
SMC_{24}	NBS0/A0 NBS1, NBS2/A1, NBS3, A2 - A25 valid before NCS low	ncs wr setup * t_{CPMCK} - 3.3	ncs wr setup * t_{CPMCK} - 4.1	ns
SMC_{25}	NWE low before NCS high	(ncs wr setup - nwe setup + ncs pulse)* t_{CPMCK} - 2.4	(ncs wr setup - nwe setup + ncs pulse)* t_{CPMCK} - 2.7	ns
SMC_{26}	NCS High to Data Out, NBS0/A0, NBS1, NBS2/A1, NBS3, A2 - A25, change	ncs wr hold * t_{CPMCK} - 4.1	ncs wr hold * t_{CPMCK} - 4.6	ns
SMC_{27}	NCS High to NWE Inactive	(ncs wr hold - nwe hold)* t_{CPMCK} - 2.0	(ncs wr hold - nwe hold)* t_{CPMCK} - 2.8	ns

Figure 46-3. SMC Timings - NCS Controlled Read and Write

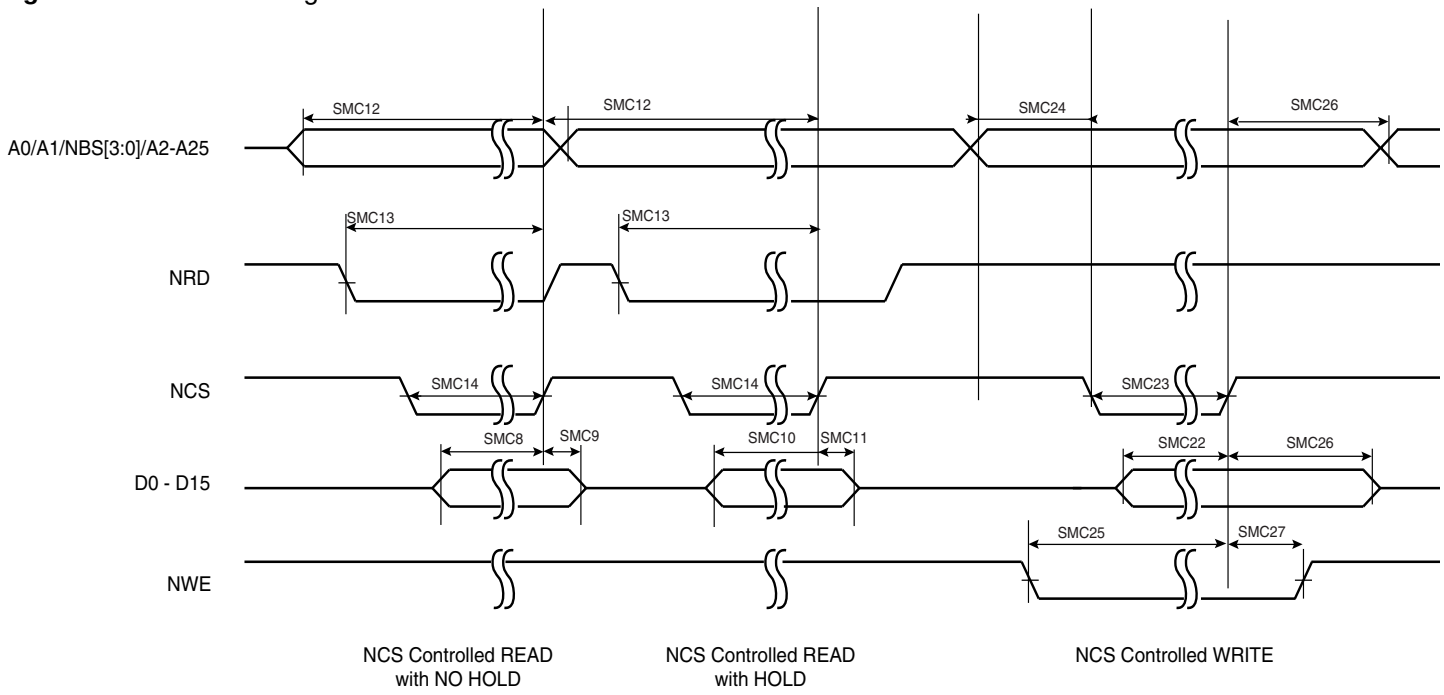

Figure 46-4. SMC Timings - NRD Controlled Read and NWE Controlled Write

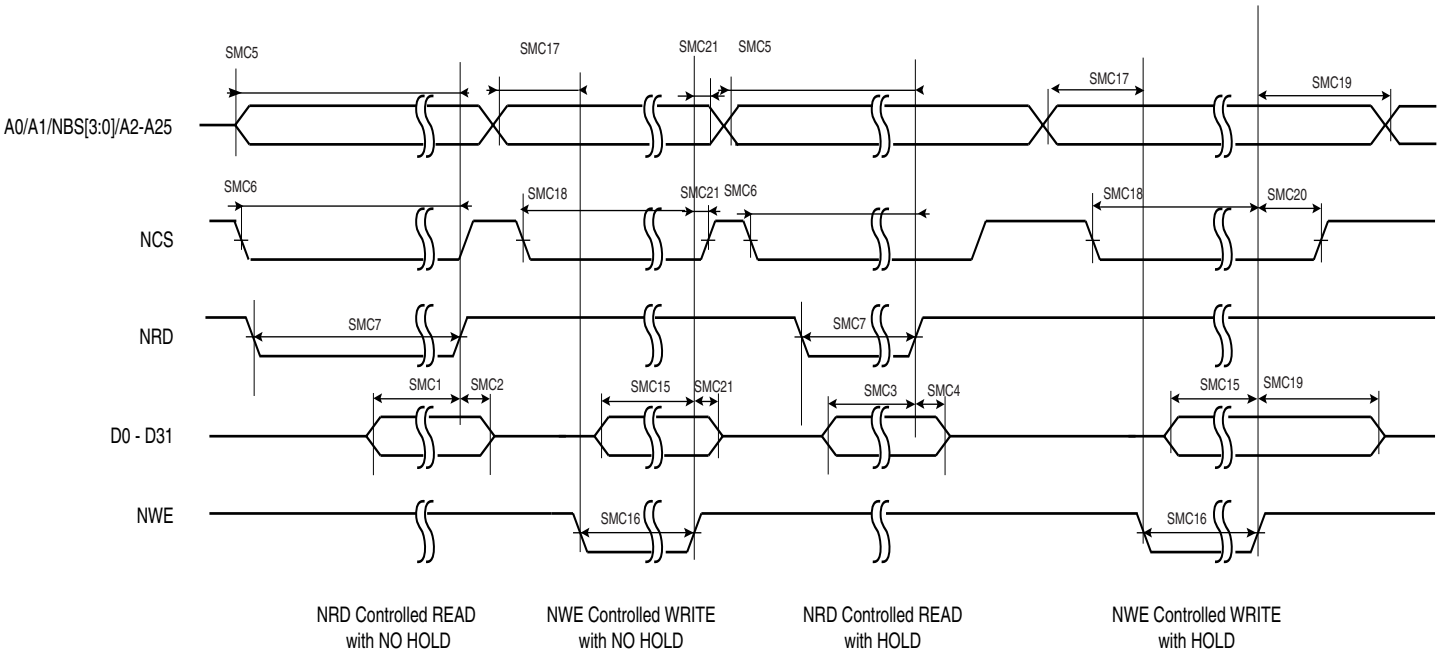

46.14 DDRSDRC Timings

The DDRSDRC controller satisfies the timings of standard DDR2, LP-DDR, SDR and LP-SDR modules.

DDR2, LP-DDR and SDR timings are specified by the JEDEC standard.

Supported speed grade limitations:

- DDR2-400 limited at 133 MHz clock frequency (1.8V, 30pF on data/control, 10pF on CK/CK#)
- LP-DDR (1.8V, 30pF on data/control, 10pF on CK)
  Tcyc = 5.0 ns, Fmax = 125 MHz
  Tcyc = 6.0 ns, Fmax = 110 MHz
  Tcyc = 7.5 ns, Fmax = 95 MHz
- SDR-100 (3.3V, 50pF on data/control, 10pF on CK)
- SDR-133 (3.3V, 50pF on data/control, 10pF on CK)
- LP-SDR-133 (1.8V, 30pF on data/control, 10pF on CK)

46.15 Peripheral Timings

46.15.1 SPI

46.15.1.1 Maximum SPI Frequency

The following formulas give maximum SPI frequency in Master read and write modes and in Slave read and write modes.

Master Write Mode

The SPI is only sending data to a slave device such as an LCD, for example. The limit is given by SPI_2 (or SPI_5) timing. Since it gives a maximum frequency above the maximum pad speed (see Section 46.9 “I/Os”), the max SPI frequency is the one from the pad.

Master Read Mode

$$f_{SPCK}Max = \frac{1}{SPI_0(orSPI_3) + T_{valid}}$$

T_{valid} is the slave time response to output data after deleting an SPCK edge. For Atmel SPI DataFlash (AT45DB642D), T_{valid} (orT_v) is 12 ns Max.

In the formula above, F_{SPCK}Max = 38.5 MHz @ VDDIO = 3.3V.

Slave Read Mode

In slave mode, SPCK is the input clock for the SPI. The max SPCK frequency is given by setup and hold timings SPI_7/SPI_8(or SPI_{10}/SPI_{11}). Since this gives a frequency well above the pad limit, the limit in slave read mode is given by SPCK pad.

Slave Write Mode

$$f_{SPCK}Max = \frac{1}{SPI_6(orSPI_9) + T_{setup}}$$

For 3.3V I/O domain and SPI6, F_{SPCK}Max = 33 MHz. T_{setup} is the setup time from the master before sampling data.

46.15.1.2 Timing Conditions

Timings are given assuming a capacitance load on MISO, SPCK and MOSI:

Table 46-32. Capacitance Load for MISO, SPCK and MOSI (product dependent)

	Corner	
Supply	MAX	MIN
3.3V	40 pF	5 pF
1.8V	20 pF	5 pF

46.15.1.3 Timing Extraction

Figure 46-5. SPI Master Mode 1 and 2

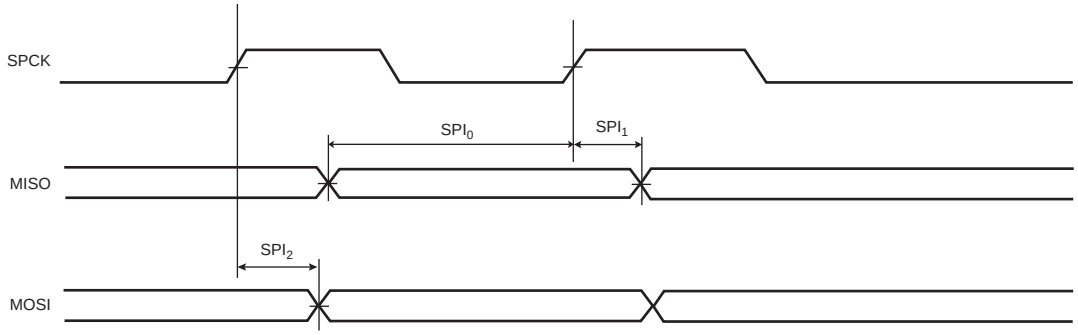

Figure 46-6. SPI Master Mode 0 and 3

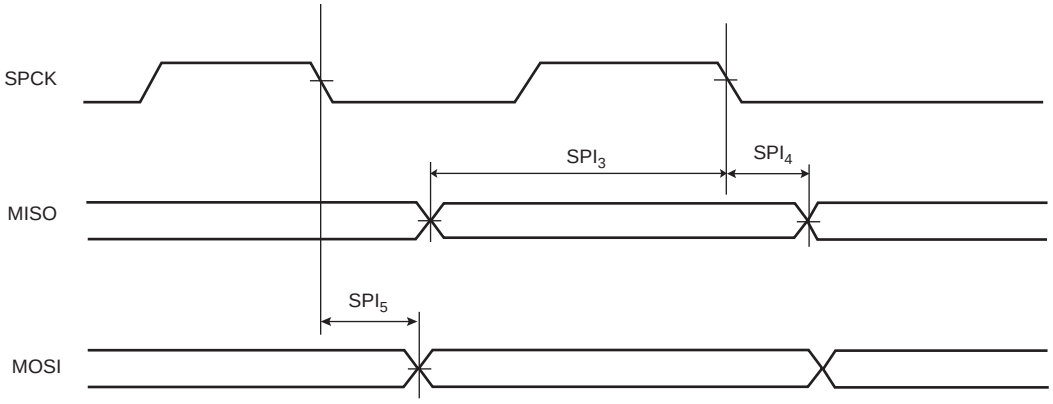

Figure 46-7. SPI Slave Mode 0 and 3)

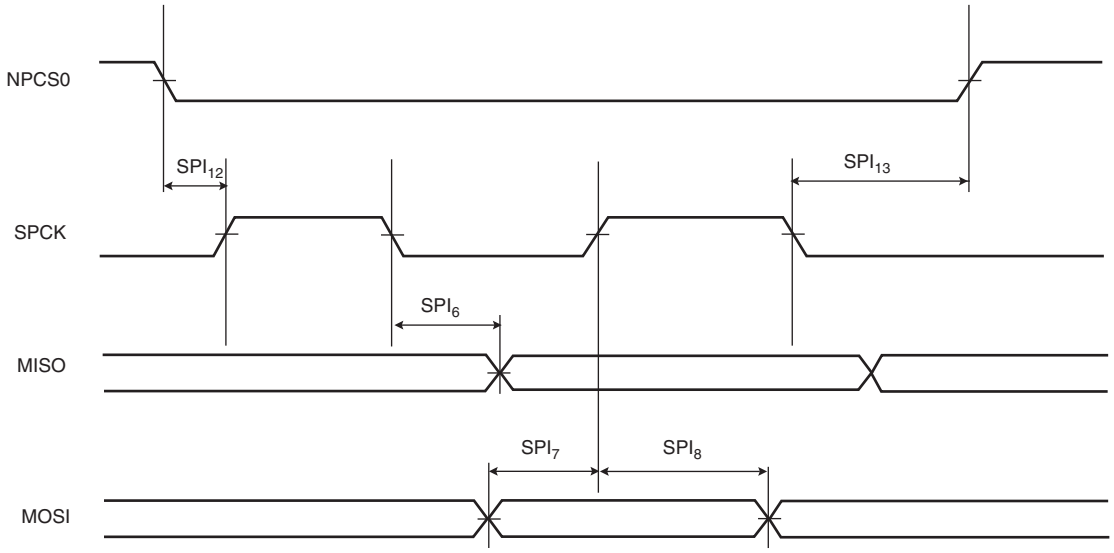

Figure 46-8. SPI Slave Mode 1 and 2

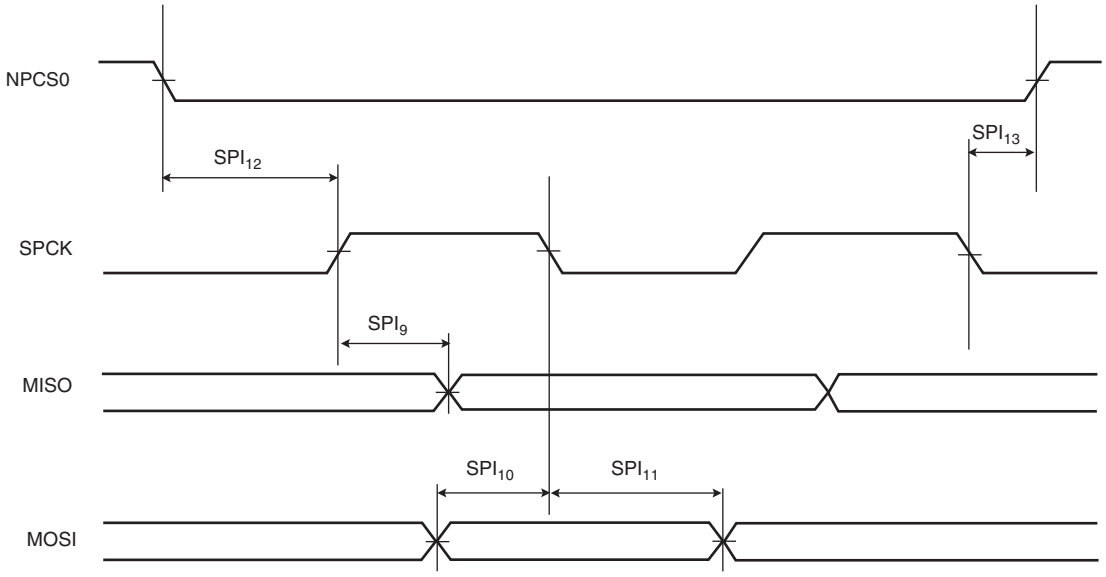

Figure 46-9. SPI Slave Mode - NPCS Timings

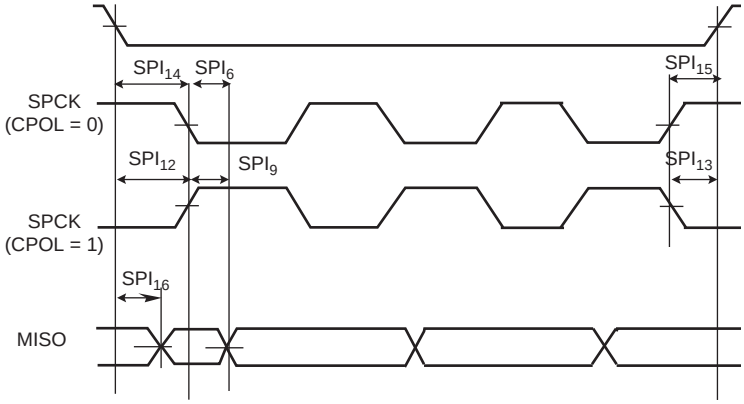

Table 46-33. SPI Timings with 3.3V Peripheral Supply

Symbol	Parameter	Cond	Min	Max	Units
Master Mode					
SPI_{SPCK}	SPI Clock			66	MHz
SPI_0	MISO Setup time before SPCK rises		14.6		ns
SPI_1	MISO Hold time after SPCK rises		0		ns
SPI_2	SPCK rising to MOSI		0	0.2	ns
SPI_3	MISO Setup time before SPCK falls		14.3		ns
SPI_4	MISO Hold time after SPCK falls		0		ns
SPI_5	SPCK falling to MOSI		0	0.6	ns
Slave Mode					
SPI_6	SPCK falling to MISO		4.6	15.1	ns
SPI_7	MOSI Setup time before SPCK rises		0.7		ns
SPI_8	MOSI Hold time after SPCK rises		1.9		ns
SPI_9	SPCK rising to MISO		4.6	15.2	ns
SPI_{10}	MOSI Setup time before SPCK falls		0.9		ns
SPI_{11}	MOSI Hold time after SPCK falls		1.4		ns
SPI_{12}	NPCS0 setup to SPCK rising		17.3		ns
SPI_{13}	NPCS0 hold after SPCK falling		15.1		ns
SPI_{14}	NPCS0 setup to SPCK falling		18		ns
SPI_{15}	NPCS0 hold after SPCK rising		15.0		ns
SPI_{16}	NPCS0 falling to MISO valid		4.4	14.5	ns

Table 46-34. SPI Timings with 1.8V Peripheral Supply

Symbol	Parameter	Cond	Min	Max	Units
Master Mode					
SPI_{SPCK}	SPI Clock			66	MHz
SPI_0	MISO Setup time before SPCK rises		18.0		ns
SPI_1	MISO Hold time after SPCK rises		0		ns
SPI_2	SPCK rising to MOSI		0	0.2	ns
SPI_3	MISO Setup time before SPCK falls		17.6		ns
SPI_4	MISO Hold time after SPCK falls		0		ns
SPI_5	SPCK falling to MOSI		0	0.7	ns
Slave Mode					
SPI_6	SPCK falling to MISO		6.0	18.9	ns
SPI_7	MOSI Setup time before SPCK rises		0.7		ns
SPI_8	MOSI Hold time after SPCK rises		1.7		ns
SPI_9	SPCK rising to MISO		5.5	18.7	ns

Table 46-34. SPI Timings with 1.8V Peripheral Supply (Continued)

Symbol	Parameter	Cond	Min	Max	Units
SPI_{10}	MOSI Setup time before SPCK falls		0.5		ns
SPI_{11}	MOSI Hold time after SPCK falls		1.4		ns
SPI_{12}	NPCS0 setup to SPCK rising		17.4		ns
SPI_{13}	NPCS0 hold after SPCK falling		15.5		ns
SPI_{14}	NPCS0 setup to SPCK falling		17.8		ns
SPI_{15}	NPCS0 hold after SPCK rising		15.3		ns
SPI_{16}	NPCS0 falling to MISO valid		5.4	17.7	ns

Figure 46-10. Min and Max Access Time for SPI Output Signal

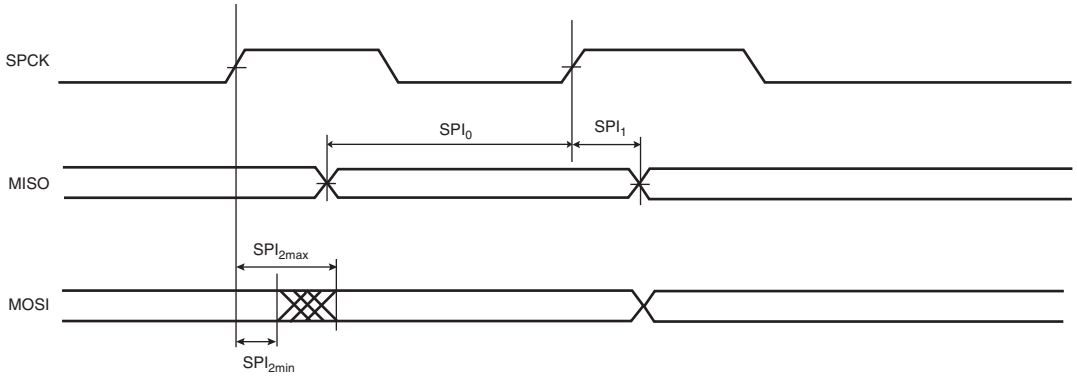

46.15.2 SSC

46.15.2.1 Timing Conditions

Timings are given assuming a capacitance load on Table 46-35.

Table 46-35. Capacitance Load

	Corner	
Supply	MAX	MIN
3.3V	30pF	0 pF
1.8V	20pF	0 pF

46.15.2.2 Timing Extraction

Figure 46-11. SSC Transmitter, TK and TF in Output

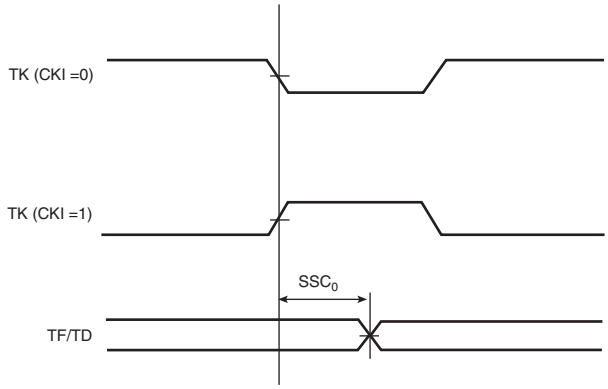

Figure 46-12. SSC Transmitter, TK in Input and TF in Output

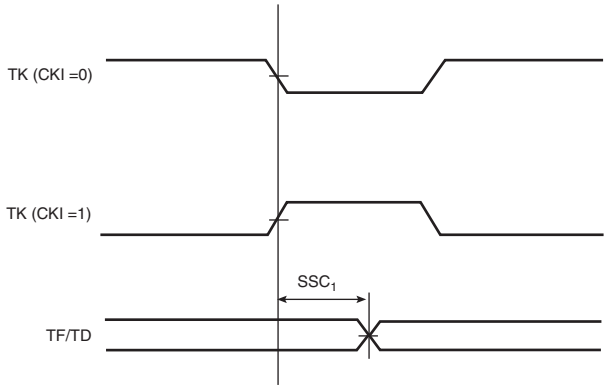

Figure 46-13. SSC Transmitter, TK in Output and TF in Input

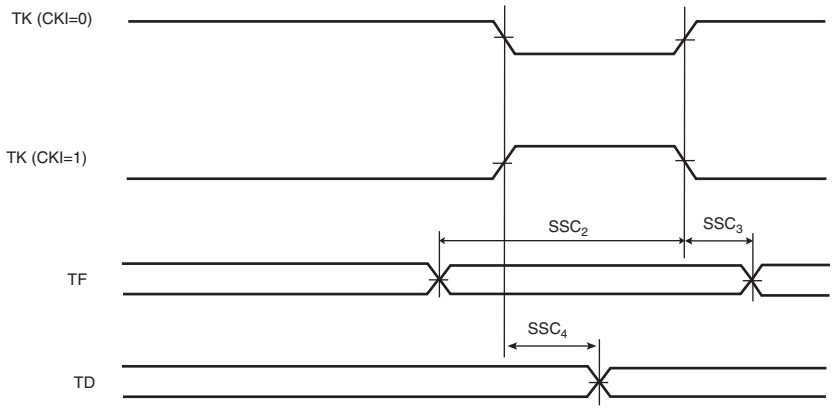

Figure 46-14. SSC Receiver RK and RF in Input

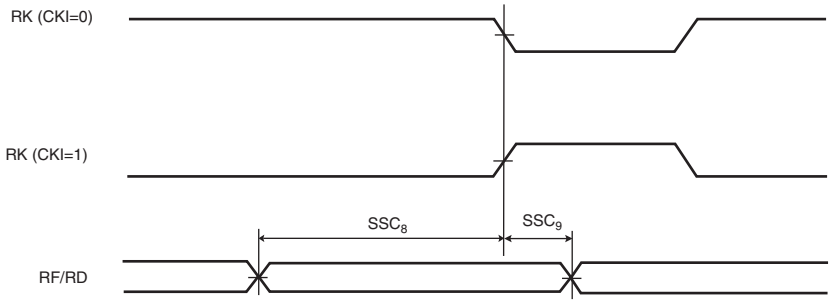

Figure 46-15. SSC Receiver, RK in Input and RF in Output

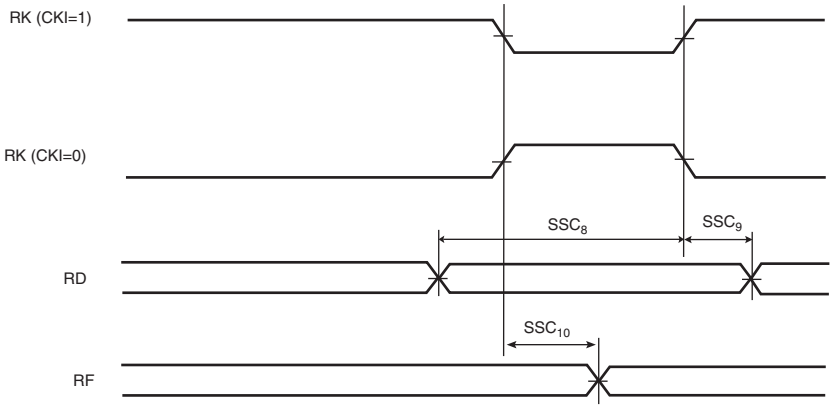

Figure 46-16. SSC Receiver, RK and RF in Output

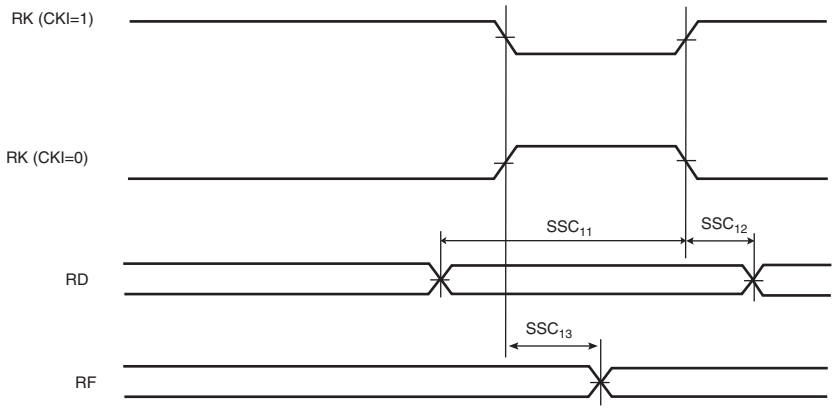

Figure 46-17. SSC Receiver, RK in Output and RF in Input

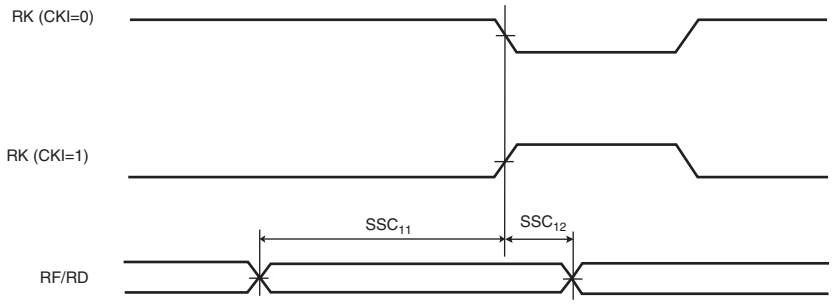

Table 46-36. SSC Timings with 3.3V Peripheral Supply

Symbol	Parameter	Cond	Min	Max	Units
		Transmitter			
SSC_0	TK edge to TF/TD (TK output, TF output)		0 [2]	4.0 [2]	ns
SSC_1	TK edge to TF/TD (TK input, TF output)		3.7 [2]	13.6 [2]	ns
SSC_2	TF setup time before TK edge (TK output)		14.3 - t_{CPMCK}		ns
SSC_3	TF hold time after TK edge (TK output)		t_{CPMCK} - 3.9		ns
SSC_4 [1]	TK edge to TF/TD (TK output, TF input)		-2.6 (+2*t_{CPMCK}) [1][2]	4.0 (+2*t_{CPMCK}) [1][2]	ns
SSC_5	TF setup time before TK edge (TK input)		0		ns
SSC_6	TF hold time after TK edge (TK input)		t_{CPMCK}		ns
SSC_7 [1]	TK edge to TF/TD (TK input, TF input)		3.8 (+3*t_{CPMCK}) [1][2]	13.6 (+3*t_{CPMCK}) [1][2]	ns
		Receiver			
SSC_8	RF/RD setup time before RK edge (RK input)		1.9		ns
SSC_9	RF/RD hold time after RK edge (RK input)		t_{CPMCK}		ns
SSC_{10}	RK edge to RF (RK input)		4.3 [2]	16.9 [2]	ns
SSC_{11}	RF/RD setup time before RK edge (RK output)		14.2 - t_{CPMCK}		ns
SSC_{12}	RF/RD hold time after RK edge (RK output)		t_{CPMCK} - 3.9		ns
SSC_{13}	RK edge to RF (RK output)		0 [2]	5.2 [2]	ns

Notes:
1. Timings SSC4 and SSC7 depend on the start condition. When STTDLY = 0 (Receive start delay) and START = 4, or 5 or 7 (Receive Start Selection), two Periods of the MCK must be added to timings.
2. For output signals (TF, TD, RF), Min and Max access times are defined. The Min access time is the time between the TK (or RK) edge and the signal change. The Max access time is the time between the TK edge and the signal stabilization. Figure 46-18 illustrates Min and Max accesses for SSC0. The same applies to SSC1, SSC4, and SSC7, SSC10 and SSC13.

Table 46-37. SSC Timings with 1.8V Peripheral Supply

Symbol	Parameter	Cond	Min	Max	Units
		Transmitter			
SSC_0	TK edge to TF/TD (TK output, TF output)		0 (2)	4.2 (2)	ns
SSC_1	TK edge to TF/TD (TK input, TF output)		4.8 (2)	18.4 (2)	ns
SSC_2	TF setup time before TK edge (TK output)		18.4 - t_{CPMCK}		ns
SSC_3	TF hold time after TK edge (TK output)		t_{CPMCK} - 5.1		ns
SSC_4 (1)	TK edge to TF/TD (TK output, TF input)		-2.8 (+2*t_{CPMCK}) (1)(2)	4.2 (+2*t_{CPMCK}) (1)(2)	ns
SSC_5	TF setup time before TK edge (TK input)		0.6		ns
SSC_6	TF hold time after TK edge (TK input)		t_{CPMCK}		ns
SSC_7 (1)	TK edge to TF/TD (TK input, TF input)		5.0 (+3*t_{CPMCK}) (1)(2)	18.3 (+3*t_{CPMCK}) (1)(2)	ns
		Receiver			
SSC_8	RF/RD setup time before RK edge (RK input)		2.4		ns
SSC_9	RF/RD hold time after RK edge (RK input)		t_{CPMCK}		ns
SSC_{10}	RK edge to RF (RK input)		5.4 (2)	21.5 (2)	ns
SSC_{11}	RF/RD setup time before RK edge (RK output)		18.6 - t_{CPMCK}		ns
SSC_{12}	RF/RD hold time after RK edge (RK output)		t_{CPMCK} - 5.1		ns
SSC_{13}	RK edge to RF (RK output)		0 (2)	5.3 (2)	ns

Notes: 1. Timings SSC4 and SSC7 depend on the start condition. When STTDLY = 0 (Receive start delay) and START = 4, or 5 or 7 (Receive Start Selection), two Periods of the MCK must be added to timings.

2. For output signals (TF, TD, RF), Min and Max access times are defined. The Min access time is the time between the TK (or RK) edge and the signal change. The Max access time is the time between the TK edge and the signal stabilization. Figure 46-18 illustrates Min and Max accesses for SSC0. The same applies to SSC1, SSC4, and SSC7, SSC10 and SSC13.

Figure 46-18. Min and Max Access Time of Output Signals

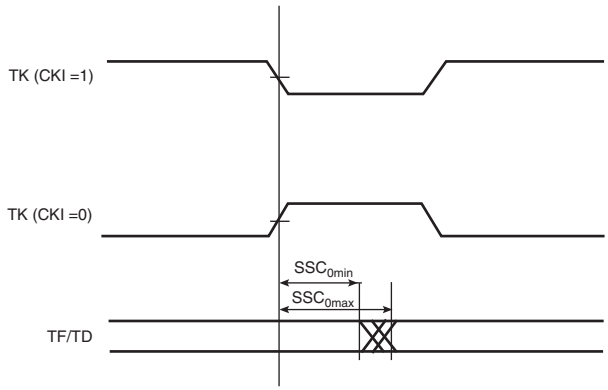

46.15.3 ISI

46.15.3.1 Timing Conditions

Timings are given assuming capacitance loads on Table 46-38.

Table 46-38. Capacitance Load

	Corner	
Supply	MAX	MIN
3.3V	30pF	0 pF
1.8V	20pF	0 pF

46.15.3.2 Timing Extraction

Figure 46-19. ISI Timing Diagram

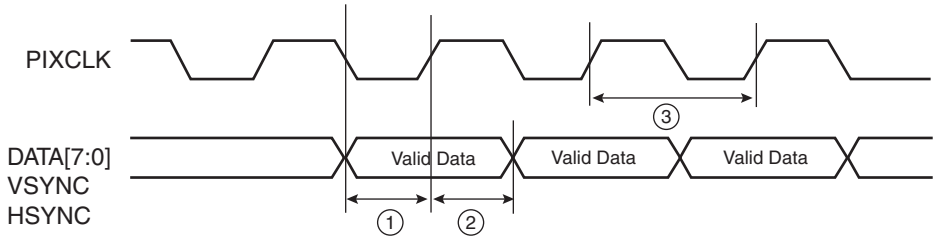

Table 46-39. ISI Timings with 3.3V Peripheral Supply

Symbol	Parameter	Min	Max	Units
ISI_1	DATA/VSYNC/HSYNC setup time	1.1		ns
ISI_2	DATA/VSYNC/HSYNC hold time	2.0		ns
ISI_3	PIXCLK frequency		80	MHz

Table 46-40. ISI Timings with 1.8V Peripheral Supply

Symbol	Parameter	Min	Max	Units
ISI_1	DATA/VSYNC/HSYNC setup time	1.1		ns
ISI_2	DATA/VSYNC/HSYNC hold time	2.2		ns
ISI_3	PIXCLK frequency		80	MHz

46.15.4 HSMCI

The High Speed MultiMedia Card Interface (HSMCI) supports the MultiMedia Card (MMC) Specification V4.3, the SD Memory Card Specification V2.0, the SDIO V2.0 specification and CE-ATA V1.1.

46.15.5 EMAC

46.15.5.1 Timing Conditions

Timings are given assuming a capacitance load on data and clock:

Table 46-41. Capacitance Load on Data, Clock Pads

	Corner	
Supply	MAX	MIN
3.3V	20pF	0pF
1.8V	20pF	0pF

46.15.5.2 Timing Constraints

The Ethernet controller must satisfy the timings of MAX corner standards given in Table 46-42 and Table 46-43.

Table 46-42. EMAC Signals Relative to EMDC

Symbol	Parameter	Min (ns)	Max (ns)
$EMAC_1$	Setup for EMDIO from EMDC rising	13.5	
$EMAC_2$	Hold for EMDIO from EMDC rising	10	
$EMAC_3$	EMDIO toggling from EMDC falling	0 (1)	2 (1)

Notes: 1. For EMAC output signals, Min and Max access time are defined. The Min access time is the time between the EDMC falling edge and the signal change. The Max access time is the time between the EDMC falling edge and the signal stabilization. Figure 46-20 illustrates Min and Max accesses for EMAC3.

Figure 46-20. Min and Max Access Time of EMAC Output Signals

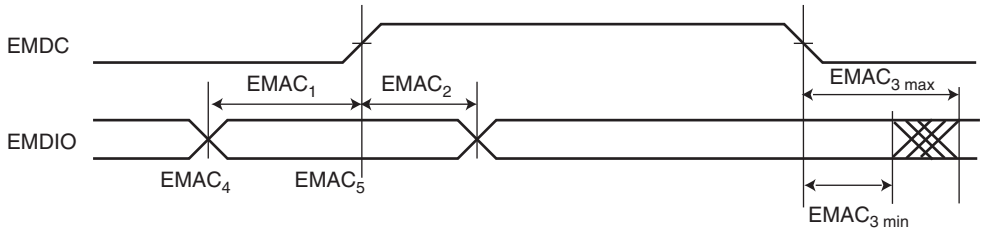

46.15.5.3 MII Mode

Table 46-43. EMAC MII Specific Signals

Symbol	Parameter	Min (ns)	Max (ns)
$EMAC_4$	Setup for ECOL from ETXCK rising	10	
$EMAC_5$	Hold for ECOL from ETXCK rising	10	
$EMAC_6$	Setup for ECRS from ETXCK rising	10	
$EMAC_7$	Hold for ECRS from ETXCK rising	10	
$EMAC_8$	ETXER toggling from ETXCK rising	3	25
$EMAC_9$	ETXEN toggling from ETXCK rising	4.7	25

Table 46-43. EMAC MII Specific Signals (Continued)

Symbol	Parameter	Min (ns)	Max (ns)
$EMAC_{10}$	ETX toggling from ETXCK rising	3	25
$EMAC_{11}$	Setup for ERX from ERXCK	10	
$EMAC_{12}$	Hold for ERX from ERXCK	10	
$EMAC_{13}$	Setup for ERXER from ERXCK	10	
$EMAC_{14}$	Hold for ERXER from ERXCK	10	
$EMAC_{15}$	Setup for ERXDV from ERXCK	10	
$EMAC_{16}$	Hold for ERXDV from ERXCK	10	

Figure 46-21. EMAC MII Mode

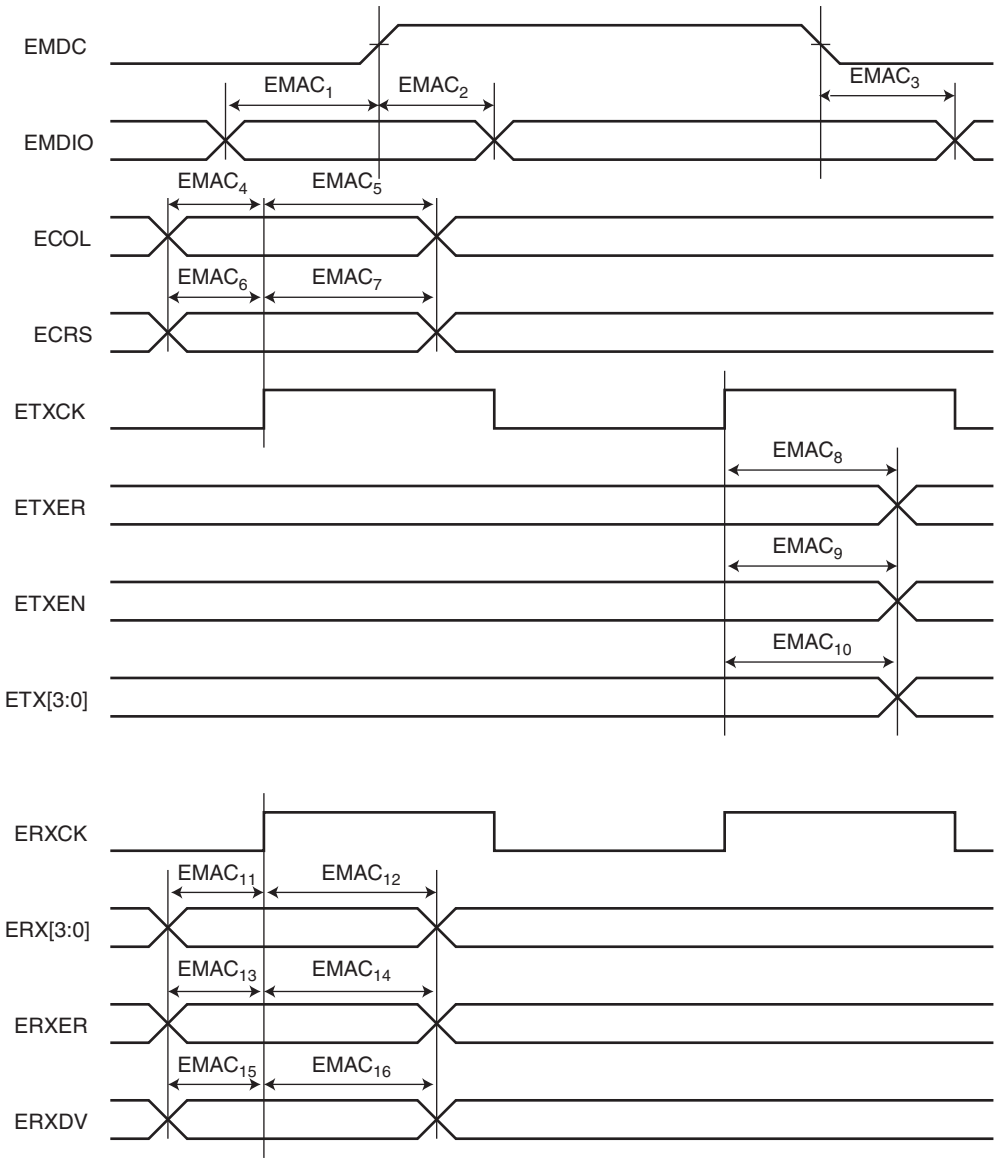

Table 46-44. RMII Mode

Symbol	Parameter	Min (ns)	Max (ns)
$EMAC_{21}$	ETXEN toggling from EREFCK rising	2	16
$EMAC_{22}$	ETX toggling from EREFCK rising	2	16
$EMAC_{23}$	Setup for ERX from EREFCK rising	4	
$EMAC_{24}$	Hold for ERX from EREFCK rising	2	
$EMAC_{25}$	Setup for ERXER from EREFCK rising	4	
$EMAC_{26}$	Hold for ERXER from EREFCK rising	2	
$EMAC_{27}$	Setup for ECRSDV from EREFCK rising	4	

Notes: 1. See Note [(2)] of Table 46-42.

Figure 46-22. EMAC RMII Timings

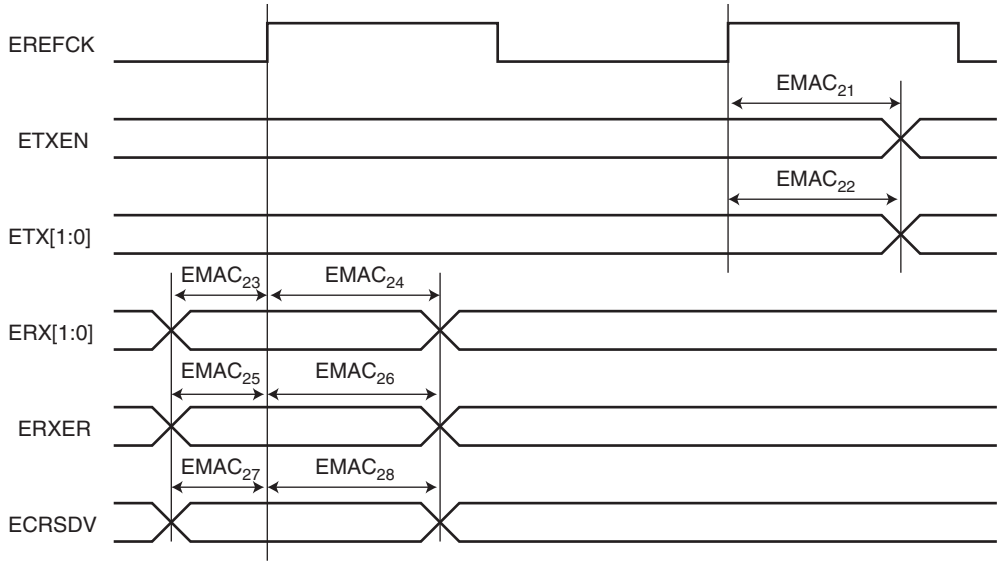

46.15.6 UART in SPI Mode

46.15.6.1 Timing Conditions

Timings are given assuming a capacitance load on MISO, SPCK and MOSI:

Table 46-45. Capacitance Load for MISO, SPCK and MOSI (product dependent)

	Corner	
Supply	MAX	MIN
3.3V	40pF	0 pF
1.8V	20 pF	0 pF

46.15.6.2 Timing Extraction

Figure 46-23. UART SPI Master Mode

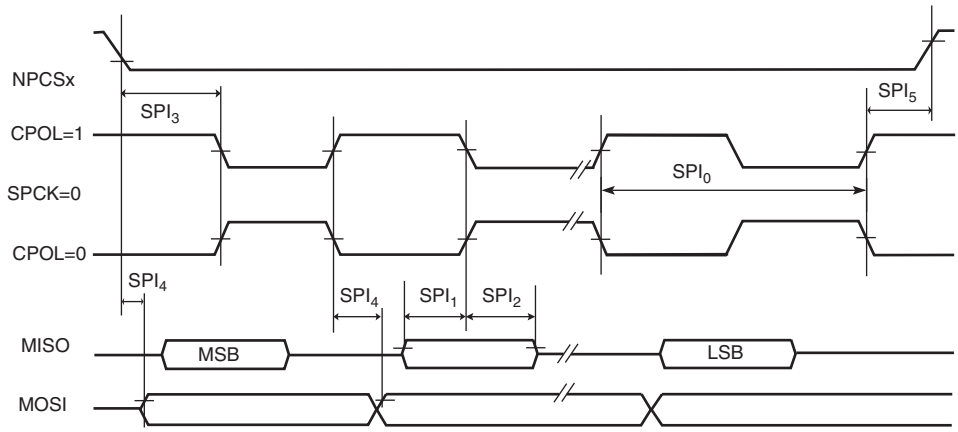

Figure 46-24. UART SPI Slave Mode

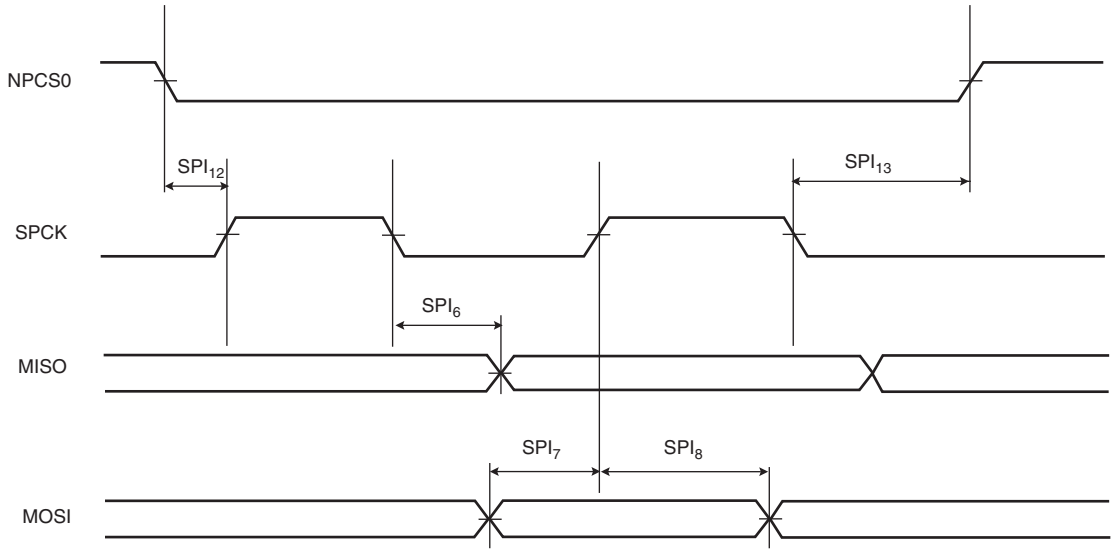

Figure 46-25. SPI Slave Mode - NPCS Timings

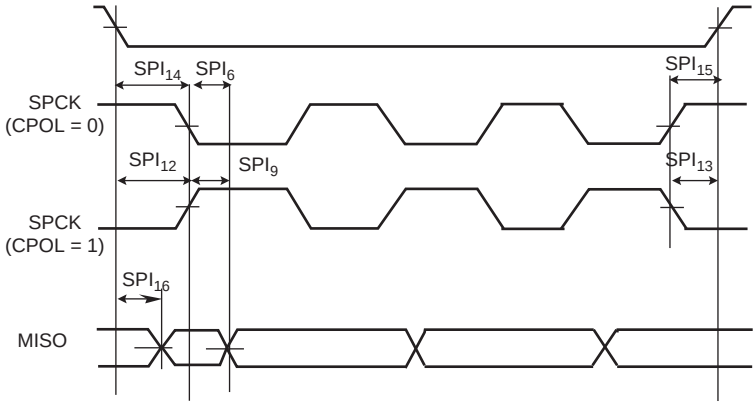

Table 46-46. UART SPI Timings with 3.3V Peripheral Supply

Symbol	Parameter	Cond	Min	Max	Units
		Master Mode			
SPI_0	SPCK Period				ns
SPI_1	Input Data Setup Time		17.2		ns
SPI_2	Input Data Hold Time		0		ns
SPI_3	Chip Select Active to Serial Clock			3.5	ns
SPI_4	Output Data Setup Time			0.2	ns
SPI_5	Serial Clock to Chip Select Inactive			-0.3	ns
		Slave Mode			
SPI_6	SPCK falling to MISO		13.8 (1)	16.9 (1)	ns
SPI_7	MOSI Setup time before SPCK rises		7.5		ns
SPI_8	MOSI Hold time after SPCK rises		2.9		ns
SPI_9	SPCK rising to MISO		4.7 (1)	17.1 (1)	ns
SPI_{10}	MOSI Setup time before SPCK falls		0.4		ns
SPI_{11}	MOSI Hold time after SPCK falls		0		ns
SPI_{12}	NPCS0 setup to SPCK rising		10.3		ns
SPI_{13}	NPCS0 hold after SPCK falling		2.0		ns
SPI_{14}	NPCS0 setup to SPCK falling		10.7		ns
SPI_{15}	NPCS0 hold after SPCK rising		2.0		ns
SPI_{16}	NPCS0 falling to MISO valid			16.0	ns

Notes: 1. For output signals, Min and Max access time must be extracted. The Min access time is the time between the SPCK rising or falling edge and the signal change. The Max access time is the time between the SPCK rising or falling edge and the signal stabilization. Figure 46-9 illustrates Min and Max accesses for SPI2. The same applies to SPI5, SPI6, SPI9.

Table 46-47. UART SPI Timings with 1.8V Peripheral Supply

Symbol	Parameter	Cond	Min	Max	Units
Master Mode					
SPI_0	SPCK Period				ns
SPI_1	Input Data Setup Time		20.6		ns
SPI_2	Input Data Hold Time		0		ns
SPI_3	Chip Select Active to Serial Clock			6.0	ns
SPI_4	Output Data Setup Time			0.2	ns
SPI_5	Serial Clock to Chip Select Inactive			0	ns
Slave Mode					
SPI_6	SPCK falling to MISO		4.4	20.7	ns
SPI_7	MOSI Setup time before SPCK rises		7.6		ns
SPI_8	MOSI Hold time after SPCK rises		3.1		ns
SPI_9	SPCK rising to MISO		5.6	20.6	ns
SPI_{10}	MOSI Setup time before SPCK falls		0.8		ns
SPI_{11}	MOSI Hold time after SPCK falls		0		ns
SPI_{12}	NPCS0 setup to SPCK rising		10.2		ns
SPI_{13}	NPCS0 hold after SPCK falling		1.9		ns
SPI_{14}	NPCS0 setup to SPCK falling		11.0		ns
SPI_{15}	NPCS0 hold after SPCK rising		2.2		ns
SPI_{16}	NPCS0 falling to MISO valid			18.9	ns

47. SAM9G45 Mechanical Characteristics

47.1 Package Drawings

Figure 47-1. 324-ball TFBGA Package Drawing

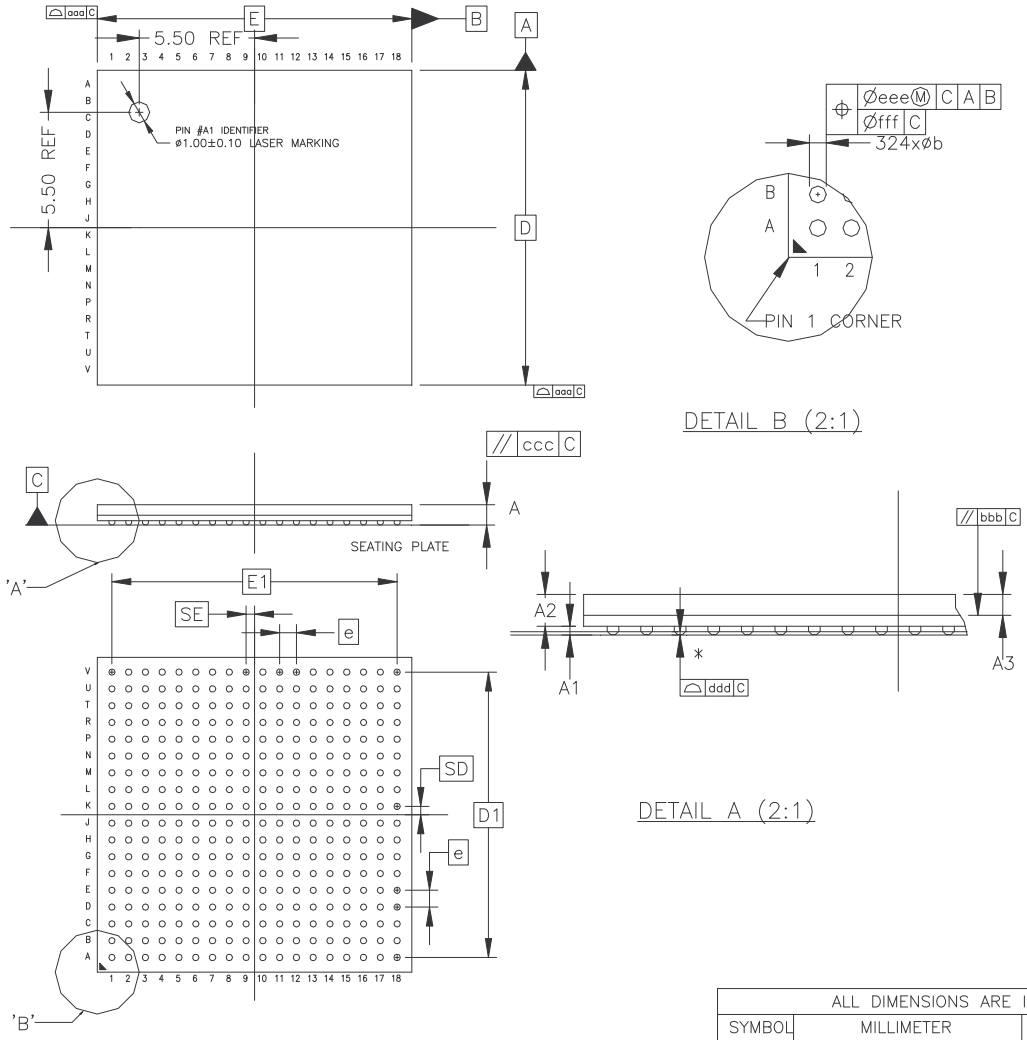

NOTES :

1. DIMENSIONS ARE IN MILLIMETERS.
2. PRIMARY DATUM C AND SEATING PLANE ARE DEFINED BY THE SPHERICAL CROWNS OF THE CONTACT BALLS.
3. DIMENSION 'A' INCLUDES STANDOFF HEIGHT 'A1', PACKAGE BODY THICKNESS AND LID HEIGHT, BUT DOES NOT INCLUDE ATTACHED FEATURES.
4. DIMENSION 'b' IS MEASURED AT THE MAXIMUM BALL DIAMETER, PARALLEL TO PRIMARY DATUM C.
5. PARALLELISM MEASURMENT SHALL EXCLUDE ANY EFFECT OF MARK ON TOP SURFACE OF PACKAGE.

ALL DIMENSIONS ARE IN MILLIMETERS.						
SYMBOL	MILLIMETER			INCH		
	MIN	NOM	MAX	MIN	NOM	MAX
A	---	---	1.20	---	----	0.0472
A1	0.16	0.21	0.26	0.0063	0.0083	0.0102
A2	0.72	0.76	0.80	0.0283	0.0299	0.0315
A3	0.50 BASIC			0.0197 BASIC		
D	14.95	15.00	15.05	0.5886	0.5906	0.5926
D1	13.60 BASIC			0.5354 BASIC		
E	14.95	15.00	15.05	0.5866	0.5906	0.5926
E1	13.60 BASIC			0.5354 BASIC		
SD	0.40 BASIC			0.0157 BASIC		
SE	0.40 BASIC			0.0157 BASIC		
e	0.80 BASIC			0.0315		
b	0.25	0.30	0.35	0.0098	0.0118	0.0138
aaa	0.15			0.0059		
bbb	0.20			0.0079		
ccc	0.20			0.0079		
ddd	0.08			0.0031		
eee	0.15			0.0059		
fff	0.08			0.0031		

Table 47-1. Package Information

Ball Land	0.375 mm +/- 0.05
Soldering Mask Opening	0.275 mm +/- 0.03
Solder Mask Definition	Non Solder Mask Defined (NSMD)

Table 47-2. Device and 324-ball TFBGA Package Maximum Weight

400	mg

Table 47-3. 324-ball TFBGA Package Characteristics

Moisture Sensitivity Level	3

Table 47-4. Package Reference

JEDEC Drawing Reference	MO-210
JESD97 Classification	e1

This package respects the recommendations of the NEMI User Group.

47.2 Soldering Profile

Table 47-5 gives the recommended soldering profile from J-STD-020C.

Table 47-5. Soldering Profile

Profile Feature	Green Package
Average Ramp-up Rate (217°C to Peak)	3°C/sec. max.
Preheat Temperature 175°C ±25°C	180 sec. max.
Temperature Maintained Above 217°C	60 sec. to 150 sec.
Time within 5°C of Actual Peak Temperature	20 sec. to 40 sec.
Peak Temperature Range	260 +0 °C
Ramp-down Rate	6°C/sec. max.
Time 25°C to Peak Temperature	8 min. max.

Note: It is recommended to apply a soldering temperature higher than 250°C

A maximum of three reflow passes is allowed per component.

47.3 Marking

All devices are marked with the Atmel logo and the ordering code.

Additional marking may be in one of the following formats:

where

- “YY”: manufactory year
- “WW”: manufactory week
- “V”: revision
- “XXXXXXXXX”: lot number

Errata on engineering samples of the SAM9G45 is available at http://www.atmel.com/dyn/resources/prod_documents/doc6485.pdf.

48. SAM9G45 Ordering Information

Table 48-1. AT91SAM9G45 Ordering Information

Ordering Code	MRL	Package	Package Type	Temperature Operating Range
AT91SAM9G45C-CU	C	TFBGA324	Green	Industrial -40°C to 85°C
AT91SAM9G45B-CU	B	TFBGA324	Green	Industrial -40°C to 85°C
AT91SAM9G45-CU	A	TFBGA324	Green	Industrial -40°C to 85°C

49. SAM9G45 Errata

49.1 SAM9G45 Errata - Rev. A Parts

49.1.1 Boot ROM

49.1.1.1 Boot ROM: NAND Flash boot does not support ECC Correction

The boot ROM allows booting from block 0 of a NAND Flash connected on CS3. However, the boot ROM does not feature ECC correction on a NAND Flash.

Most of the NAND Flash vendors do not guarantee anymore that block 0 is error free. Therefore we advise to locate the bootstrap program into another device supported by the boot ROM (DataFlash, Serial Flash, SDCARD or EEPROM), and to implement a NAND Flash access with ECC.

Problem Fix/Workaround

None.

49.1.1.2 Boot ROM: Boot issue on AT45-series SPI dataflash

The boot from AT45-series SPI DataFlash is not functional except for the AT45DB321D. Future revisions of the AT45DB321D might not be functional either.

Problem Fix/Workaround

Use AT25-series serial Flash instead.

49.1.2 Error Corrected Code Controller (ECC)

49.1.2.1 ECC: Computation with a 1 clock cycle long NRD/NWE pulse

If the SMC is programmed with NRD/NWE pulse length equal to 1 clock cycle, ECC can't compute the parity.

Problem Fix/Workaround

It is recommended to program SMC with a value superior to 1.

49.1.2.2 ECC: Uncomplete parity status when error in ECC parity

When a single correctable error is detected in ECC value, the error is located in ECC Parity register's field which contains a 1 in the 24 least significant bits, except when the error is located in the 12th or the 24th bit. In this case, these bits are always stuck at 0.

A Single correctable error is detected but it is impossible to correct it.

Problem Fix/Workaround

None.

49.1.2.3 ECC: Unsupported ECC per 512 words

1 bit ECC per 512 words is not functional.

Problem Fix/Workaround

Perform the ECC computation by software.

49.1.2.4 ECC: Unsupported hardware ECC on 16-bit Nand Flash

Hardware ECC on 16-bit Nand Flash is not supported.

Problem Fix/Workaround

Perform the ECC by software.

49.1.3 Ethernet MAC 10/100 (EMAC)

49.1.3.1 EMAC: Setup Timing Violation in RMII Mode

A setup timing violation occurs when using the EMAC in RMII mode only with I/Os in a 1.8V range [1.65V:1.95V] and when the line load exceeds 20 pF. The RMII mode is fully functional with I/Os in a 3.3V range [3.0V:3.6V].

Problem Fix/Workaround

None

49.1.4 Pulse Width Modulation Controller (PWM)

49.1.4.1 PWM: Zero Period

It is impossible to update a period equal to 0 by using the PWM_CUPD register.

Problem Fix/Workaround

None

49.1.5 RSTC: Software Reset During DDRAM Accesses

49.1.5.1 Software reset during DDRAM access

When a software reset (CPU and peripherals) occurs during DDRAM read access, the CPU will stop the DDRAM clock.

The DDRAM maintains the data on the bus until the clock restarts. This will create a bus conflict if another memory, sharing the external bus with the DDRAM, is accessed prior to completion of the read access to the DDRAM. Such a conflict will occur when the device boots out of an external NAND or NOR Flash following a software reset.

Problem Fix/Workaround

1) Boot from serial Flash

2) Before generating the software reset, the user must ensure that all the accesses to DDRAM are completed and then put the DDRAM in self-refresh mode. The routine to generate the software reset must be located in internal SRAM or in the ARM cache memory.

49.1.6 Static Memory Controller (SMC)

49.1.6.1 SMC: SMC Delay Access

In this document, the Access is “Read-write” in the Register Mapping Table (SMC_DELAY1 to SMC_DELAY8 rows), and in the SMC DELAY I/O Register.

The current access is “Write-only”.

Problem Fix/Workaround

None

49.1.7 Serial Synchronous Controller (SSC)

49.1.7.1 SSC: Data sent without any frame synchro

When SSC is configured with the following conditions:

- RF is in input,
- TD is synchronized on a receive START (any condition: START field = 2 to 7)
- TF toggles at each start of data transfer
- Transmit STTDLY = 0
- Check TD and TF after a receive START,

The data is sent but there is not any toggle of the TF line

Problem Fix/Workaround

Transmit STTDLY must be different from 0.

49.1.7.2 SSC: Unexpected delay on TD output

When SSC is configured with the following conditions:

- TCMR.STTDLY more than 0
- RCMR.START = Start on falling edge/Start on Rising edge/Start on any edge
- RFMR.FSOS = None (input)
- TCMR.START = Receive Start

Unexpected delay of 2 or 3 system clock cycles is added to TD output.

Problem Fix/Workaround

None

49.1.8 Touch Screen (TSADCC)

49.1.8.1 TSADCC: Pen detect accuracy is not good

Depending on LCD panels, the pen detect is noisy, leading to an unpredictable behavior.

Problem Fix/Workaround

An additional resistor solves the problem. Its value (between 100 kΩ and 250 kΩ) is to be tuned for the LCD panel.

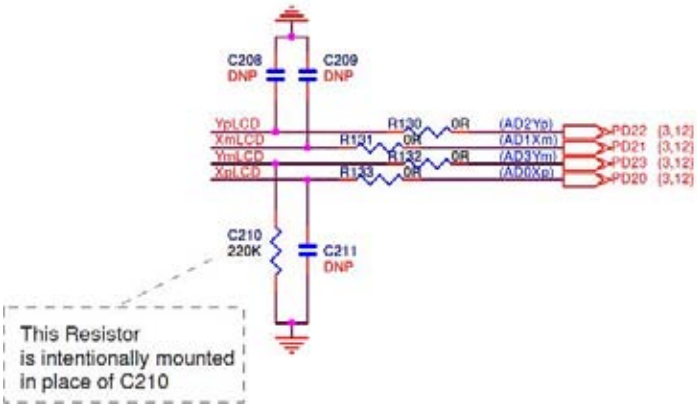

49.1.9 USB High Speed Host Port (UHPHS)

49.1.9.1 UHPHS: Packet Loss Issue in the UTMI Transceivers

High-Speed USB Host may lose incoming packets when connected to an external USB Hub.

A high data transfer error rate has been observed on the High-Speed USB Host interface when connected to an external USB Hub. The USB remains functional but the errors may require a reset of the USB interface to recover.

The Full-Speed USB Host operation is not affected by this problem.

Problem Fix/Workaround

A workaround consists of implementing a timeout on the USB communication using one of the timers in the device and trigger a reset of the USB Host interface via software and restart the communication. The impact of the work-

around on the data rate is dependent on the error rate observed in the application but can be such that streaming data at high rates becomes impractical.

49.1.10 USB High Speed Host Port (UHPHS) and Device Port (UDPHS)

49.1.10.1 UHPHS/UDPHS: USB Does Not Start after Power-up

The USB may not start properly at first use after power-up.

Booting out of the internal ROM fixes this issue because the workaround below is applied in the ROM Code.

Problem Fix/Workaround

There are two possible workarounds:

1. Apply a hardware reset (NRST) after power-up

or:

2. Activate the PLLUTMI twice, following the procedure below:
   a. Start The UTMI PLL an wait for the PLL lock bit
   b. Disable the UTMI PLL and wait 10 µ seconds minimum
   c. Restart the UTMI PLL and wait for the PLL Lock bit

Below is a possible implementation of the workaround:

```
/* First enable the UTMI PLL */
AT91C_BASE_PMC->CKGR_UCKR |= (AT91C_CKGR_UCKR_PLLCOUNT & (0x3 << 20)) |
AT91C_CKGR_UCKR_UPLLEN;
tmp =0;
while (((AT91C_BASE_PMC->PMC_SR & AT91C_PMC_SR_LOCKU) == 0) && (tmp++ < DELAY));
/* Disable the PLLUTMI and wait 10µs min*/
AT91C_BASE_PMC->CKGR_UCKR &= ~AT91C_CKGR_UCKR_UPLLEN;
tmp = 0;
while(tmp++ < DELAY2); // DELAY2 must be defined to fit the 10 µs min;
/* Re- enable the UTMI PLL and wait for the PLL lock status*/
AT91C_BASE_PMC->CKGR_UCKR |= (AT91C_CKGR_UCKR_PLLCOUNT & (0x3 << 20)) |
AT91C_CKGR_UCKR_UPLLEN;
tmp =0;
while (((AT91C_BASE_PMC->PMC_SR & AT91C_PMC_SR_LOCKU) == 0) && (tmp++ < DELAY));
```

49.1.10.2 UHPHS/UDPHS: Bad Lock of the USB High speed transceiver DLL

The DLL used to oversample the incoming bitstream may not lock in the correct phase, leading to a bad reception of the incoming packets.

This issue may occur after the USB device resumes from the Suspend mode.

The DLL is used only in the High Speed mode, meaning the Full Speed mode is not impacted by this issue.

This issue may occur on the USB device after a reset leading to a SAM-BA connection issue.

Problem Fix/Workaround:

To prevent a SAM-BA execution issue, the USB device must be connected via a USB Full Speed hub to the PC.

At application level, the DLL can be re-initialized in the correct state by toggling the BIASEN bit (high -> low -> high) when resuming from the Suspend mode.

The BIASEN bit is located in the CKGR_UCKR register in PMC user interface.

The function below can be used to generate the pulse on the bias signal.

```
void generate_pulse_bias(void)
{
unsigned int * pckgr_uckr = (unsigned int *) 0xFFFFFC1C;
* pckgr_uckr &= ~AT91_PMC_BIASEN;
* pckgr_uckr |= AT91_PMC_BIASEN;
}
```

In the USB device driver, the generate_pulse_bias function must be implemented in the “USB end of reset” and “USB end of resume” interrupts.

49.2 SAM9G45 Errata - Rev. B Parts

49.2.1 Boot ROM

49.2.1.1 Boot ROM: NAND Flash boot does not support ECC Correction

The boot ROM allows booting from block 0 of a NAND Flash connected on CS3. However, the boot ROM does not feature ECC correction on a NAND Flash.

Most of the NAND Flash vendors do not guarantee anymore that block 0 is error free. Therefore we advise to locate the bootstrap program into another device supported by the boot ROM (DataFlash, Serial Flash, SDCARD or EEPROM), and to implement a NAND Flash access with ECC.

Problem Fix/Workaround

None.

49.2.1.2 Boot ROM: Boot issue on AT45-series SPI dataflash

The boot from AT45-series SPI DataFlash is not functional except for the AT45DB321D. Future revisions of the AT45DB321D might not be functional either.

Problem Fix/Workaround

Use AT25-series serial Flash instead.

49.2.2 Error Corrected Code Controller (ECC)

49.2.2.1 ECC: Computation with a 1 clock cycle long NRD/NWE pulse

If the SMC is programmed with NRD/NWE pulse length equal to 1 clock cycle, ECC can't compute the parity.

Problem Fix/Workaround

It is recommended to program SMC with a value superior to 1.

49.2.2.2 ECC: Uncomplete parity status when error in ECC parity

When a single correctable error is detected in ECC value, the error is located in ECC Parity register's field which contains a 1 in the 24 least significant bits, except when the error is located in the 12th or the 24th bit. In this case, these bits are always stuck at 0.

A Single correctable error is detected but it is impossible to correct it.

Problem Fix/Workaround

None.

49.2.2.3 ECC: Unsupported ECC per 512 words

1 bit ECC per 512 words is not functional.

Problem Fix/Workaround

Perform the ECC computation by software.

49.2.2.4 ECC: Unsupported hardware ECC on 16-bit Nand Flash

Hardware ECC on 16-bit Nand Flash is not supported.

Problem Fix/Workaround

Perform the ECC by software.

49.2.3 Ethernet MAC 10/100 (EMAC)

49.2.3.1 EMAC: Setup Timing Violation in RMII Mode

A setup timing violation occurs when using the EMAC in RMII mode only with I/Os in a 1.8V range [1.65V:1.95V] and when the line load exceeds 20 pF. The RMII mode is fully functional with I/Os in a 3.3V range [3.0V:3.6V].

Problem Fix/Workaround

None

49.2.4 Pulse Width Modulation Controller PWM)

49.2.4.1 PWM: Zero Period

It is impossible to update a period equal to 0 by using the PWM_CUPD register.

Problem Fix/Workaround

None

49.2.5 RSTC: Software Reset During DDRAM Accesses

49.2.5.1 Software reset during DDRAM access

When a software reset (CPU and peripherals) occurs during DDRAM read access, the CPU will stop the DDRAM clock.

The DDRAM maintains the data on the bus until the clock restarts. This will create a bus conflict if another memory, sharing the external bus with the DDRAM, is accessed prior to completion of the read access to the DDRAM. Such a conflict will occur when the device boots out of an external NAND or NOR Flash following a software reset.

Problem Fix/Workaround

1) Boot from serial Flash

2) Before generating the software reset, the user must ensure that all the accesses to DDRAM are completed and then put the DDRAM in self-refresh mode. The routine to generate the software reset must be located in internal SRAM or in the ARM cache memory.

49.2.6 Static Memory Controller (SMC)

49.2.6.1 SMC: SMC Delay Access

In this document, the Access is “Read-write” in the Register Mapping Table (SMC_DELAY1 to SMC_DELAY8 rows), and in the SMC DELAY I/O Register.

The current access is “Write-only”.

Problem Fix/Workaround

None

49.2.7 Serial Synchronous Controller (SSC)

49.2.7.1 SSC: Data sent without any frame synchro

When SSC is configured with the following conditions:

- RF is in input,
- TD is synchronized on a receive START (any condition: START field = 2 to 7)
- TF toggles at each start of data transfer
- Transmit STTDLY = 0
- Check TD and TF after a receive START,

The data is sent but there is not any toggle of the TF line

Problem Fix/Workaround

Transmit STTDLY must be different from 0.

49.2.7.2 SSC: Unexpected delay on TD output

When SSC is configured with the following conditions:

- TCMR.STTDLY more than 0
- RCMR.START = Start on falling edge/Start on Rising edge/Start on any edge
- RFMR.FSOS = None (input)
- TCMR.START = Receive Start

Unexpected delay of 2 or 3 system clock cycles is added to TD output.

Problem Fix/Workaround

None

49.2.8 Touch Screen (TSADCC)

49.2.8.1 TSADCC: Pen detect accuracy is not good

Depending on LCD panels, the pen detect is noisy, leading to an unpredictable behavior.

Problem Fix/Workaround

An additional resistor solves the problem. Its value (between 100 kΩ and 250 kΩ) is to be tuned for the LCD panel.

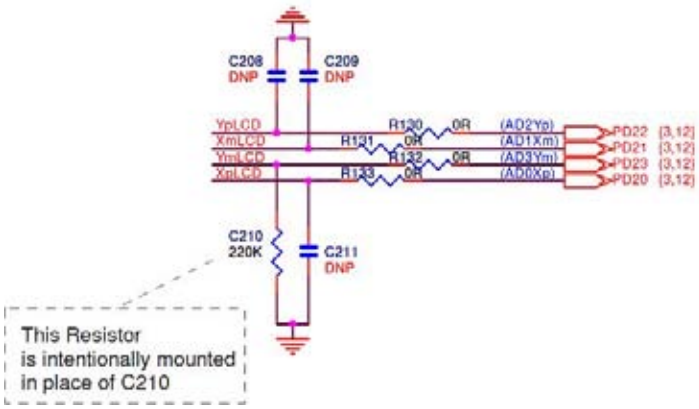

49.2.9 USB High Speed Host Port (UHPHS) and Device Port (UDPHS)

49.2.9.1 UHPHS/UDPHS: USB Does Not Start after Power-up

The USB may not start properly at first use after power-up.

Booting out of the internal ROM fixes this issue because the workaround below is applied in the ROM Code.

Problem Fix/Workaround

There are two possible workarounds:

1. Apply a hardware reset (NRST) after power-up

or:

2. Activate the PLLUTMI twice, following the procedure below:
   a. Start The UTMI PLL an wait for the PLL lock bit
   b. Disable the UTMI PLL and wait 10 µ seconds minimum
   c. Restart the UTMI PLL and wait for the PLL Lock bit

Below is a possible implementation of the workaround:

```
/* First enable the UTMI PLL */
AT91C_BASE_PMC->CKGR_UCKR |= (AT91C_CKGR_UCKR_PLLCOUNT & (0x3 << 20)) |
AT91C_CKGR_UCKR_UPLLEN;
tmp =0;
while (((AT91C_BASE_PMC->PMC_SR & AT91C_PMC_SR_LOCKU) == 0) && (tmp++ < DELAY));
/* Disable the PLLUTMI and wait 10µs min*/
AT91C_BASE_PMC->CKGR_UCKR &= ~AT91C_CKGR_UCKR_UPLLEN;
tmp = 0;
while(tmp++ < DELAY2); // DELAY2 must be defined to fit the 10 µs min;
/* Re- enable the UTMI PLL and wait for the PLL lock status*/
AT91C_BASE_PMC->CKGR_UCKR |= (AT91C_CKGR_UCKR_PLLCOUNT & (0x3 << 20)) |
AT91C_CKGR_UCKR_UPLLEN;
tmp =0;
while (((AT91C_BASE_PMC->PMC_SR & AT91C_PMC_SR_LOCKU) == 0) && (tmp++ < DELAY));
```

49.2.9.2 UHPHS/UDPHS: Bad Lock of the USB High speed transceiver DLL

The DLL used to oversample the incoming bitstream may not lock in the correct phase, leading to a bad reception of the incoming packets.

This issue may occur after the USB device resumes from the Suspend mode.

The DLL is used only in the High Speed mode, meaning the Full Speed mode is not impacted by this issue.

This issue may occur on the USB device after a reset leading to a SAM-BA connection issue.

Problem Fix/Workaround:

To prevent a SAM-BA execution issue, the USB device must be connected via a USB Full Speed hub to the PC.

At application level, the DLL can be re-initialized in the correct state by toggling the BIASEN bit (high -> low -> high) when resuming from the Suspend mode.

The BIASEN bit is located in the CKGR_UCKR register in the PMC user interface.

The function below can be used to generate the pulse on the bias signal.

```
void generate_pulse_bias(void)
```

```
{
unsigned int * pckgr_uckr = (unsigned int *) 0xFFFFFC1C;
* pckgr_uckr &= ~AT91_PMC_BIASEN;
* pckgr_uckr |= AT91_PMC_BIASEN;
}
```

In the USB device driver, the generate_pulse_bias function must be implemented in the “USB end of reset” and “USB end of resume” interrupts.

49.3 SAM9G45 Errata - Rev. C Parts

49.3.1 Boot ROM

49.3.1.1 Boot ROM: NAND Flash boot does not support ECC Correction

The boot ROM allows booting from block 0 of a NAND Flash connected on CS3. However, the boot ROM does not feature ECC correction on a NAND Flash.

Most of the NAND Flash vendors do not guarantee anymore that block 0 is error free. Therefore we advise to locate the bootstrap program into another device supported by the boot ROM (DataFlash, Serial Flash, SDCARD or EEPROM), and to implement a NAND Flash access with ECC.

Problem Fix/Workaround

None.

49.3.2 Error Corrected Code Controller (ECC)

49.3.2.1 ECC: Computation with a 1 clock cycle long NRD/NWE pulse

If the SMC is programmed with NRD/NWE pulse length equal to 1 clock cycle, ECC can't compute the parity.

Problem Fix/Workaround

It is recommended to program SMC with a value superior to 1.

49.3.2.2 ECC: Uncomplete parity status when error in ECC parity

When a single correctable error is detected in ECC value, the error is located in ECC Parity register's field which contains a 1 in the 24 least significant bits, except when the error is located in the 12th or the 24th bit. In this case, these bits are always stuck at 0.

A Single correctable error is detected but it is impossible to correct it.

Problem Fix/Workaround

None.

49.3.2.3 ECC: Unsupported ECC per 512 words

1 bit ECC per 512 words is not functional.

Problem Fix/Workaround

Perform the ECC computation by software.

49.3.2.4 ECC: Unsupported hardware ECC on 16-bit Nand Flash

Hardware ECC on 16-bit Nand Flash is not supported.

Problem Fix/Workaround

Perform the ECC by software.

49.3.3 Ethernet MAC 10/100 (EMAC)

49.3.3.1 EMAC: Setup Timing Violation in RMII Mode

A setup timing violation occurs when using the EMAC in RMII mode only with I/Os in a 1.8V range [1.65V:1.95V] and when the line load exceeds 20 pF. The RMII mode is fully functional with I/Os in a 3.3V range [3.0V:3.6V].

Problem Fix/Workaround

None

49.3.4 Pulse Width Modulation Controller PWM)

49.3.4.1 PWM: Zero Period

It is impossible to update a period equal to 0 by using the PWM_CUPD register.

Problem Fix/Workaround

None

49.3.5 RSTC: Software Reset During DDRAM Accesses

49.3.5.1 Software reset during DDRAM access

When a software reset (CPU and peripherals) occurs during DDRAM read access, the CPU will stop the DDRAM clock.

The DDRAM maintains the data on the bus until the clock restarts. This will create a bus conflict if another memory, sharing the external bus with the DDRAM, is accessed prior to completion of the read access to the DDRAM. Such a conflict will occur when the device boots out of an external NAND or NOR Flash following a software reset.

Problem Fix/Workaround

1) Boot from serial Flash

2) Before generating the software reset, the user must ensure that all the accesses to DDRAM are completed and then put the DDRAM in self-refresh mode. The routine to generate the software reset must be located in internal SRAM or in the ARM cache memory.

49.3.6 Static Memory Controller (SMC)

49.3.6.1 SMC: SMC Delay Access

In this document, the Access is “Read-write” in the Register Mapping Table (SMC_DELAY1 to SMC_DELAY8 rows), and in the SMC DELAY I/O Register.

The current access is “Write-only”.

Problem Fix/Workaround

None

49.3.7 Serial Synchronous Controller (SSC)

49.3.7.1 SSC: Data sent without any frame synchro

When SSC is configured with the following conditions:

- RF is in input,
- TD is synchronized on a receive START (any condition: START field = 2 to 7)
- TF toggles at each start of data transfer
- Transmit STTDLY = 0
- Check TD and TF after a receive START,

The data is sent but there is not any toggle of the TF line

Problem Fix/Workaround

Transmit STTDLY must be different from 0.

49.3.7.2 SSC: Unexpected delay on TD output

When SSC is configured with the following conditions:

- TCMR.STTDLY more than 0
- RCMR.START = Start on falling edge/Start on Rising edge/Start on any edge
- RFMR.FSOS = None (input)
- TCMR.START = Receive Start

Unexpected delay of 2 or 3 system clock cycles is added to TD output.

Problem Fix/Workaround

None

49.3.8 Touch Screen (TSADCC)

49.3.8.1 TSADCC: Pen detect accuracy is not good

Depending on LCD panels, the pen detect is noisy, leading to an unpredictable behavior.

Problem Fix/Workaround

An additional resistor solves the problem. Its value (between 100 kΩ and 250 kΩ) is to be tuned for the LCD panel.

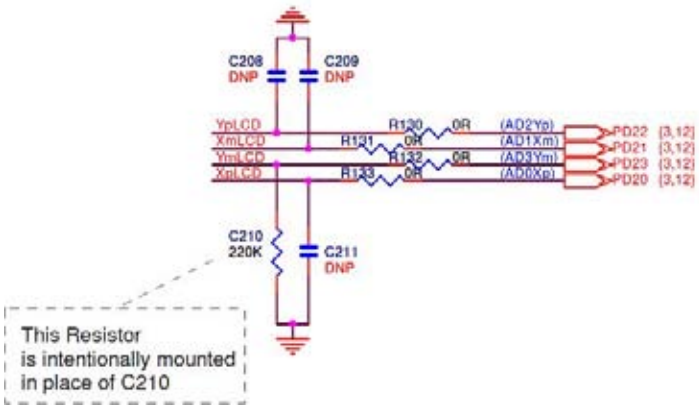

49.3.9 USB High Speed Host Port (UHPHS) and Device Port (UDPHS)

49.3.9.1 UHPHS/UDPHS: USB Does Not Start after Power-up

The USB may not start properly at first use after power-up.

Booting out of the internal ROM fixes this issue because the workaround below is applied in the ROM Code.

Problem Fix/Workaround

There are two possible workarounds:

1. Apply a hardware reset (NRST) after power-up

or:

2. Activate the PLLUTMI twice, following the procedure below:
   a. Start The UTMI PLL an wait for the PLL lock bit
   b. Disable the UTMI PLL and wait 10 µ seconds minimum
   c. Restart the UTMI PLL and wait for the PLL Lock bit

Below is a possible implementation of the workaround:

```
/* First enable the UTMI PLL */
AT91C_BASE_PMC->CKGR_UCKR |= (AT91C_CKGR_UCKR_PLLCOUNT & (0x3 << 20)) |
AT91C_CKGR_UCKR_UPLLEN;
tmp =0;
while (((AT91C_BASE_PMC->PMC_SR & AT91C_PMC_SR_LOCKU) == 0) && (tmp++ < DELAY));
/* Disable the PLLUTMI and wait 10µs min*/
AT91C_BASE_PMC->CKGR_UCKR &= ~AT91C_CKGR_UCKR_UPLLEN;
tmp = 0;
while(tmp++ < DELAY2); // DELAY2 must be defined to fit the 10 µs min;
/* Re- enable the UTMI PLL and wait for the PLL lock status*/
AT91C_BASE_PMC->CKGR_UCKR |= (AT91C_CKGR_UCKR_PLLCOUNT & (0x3 << 20)) |
AT91C_CKGR_UCKR_UPLLEN;
tmp =0;
while (((AT91C_BASE_PMC->PMC_SR & AT91C_PMC_SR_LOCKU) == 0) && (tmp++ < DELAY));
```

Revision History

In the tables that follow, the most recent version appears first. The initials “rfo” indicate changes requested by product experts, or made during proof reading as part of the approval process.

Doc. Rev 6438K	Comments	Change Request Ref.
	Ordering Codes: Table 48-1, “AT91SAM9G45 Ordering Information”, added ATSAM9G45C-CU and MLR C.	8551
	ERRATA: Table 49.3, “SAM9G45 Errata - Rev. C Parts”, added to datasheet.	8551
	SHDWC: Section 17.3 “Block Diagram”, removed unuseful block diagram formerly shown in Figure 17-1.	8453

Doc. Rev 6438J	Comments	Change Request Ref.
	Introduction: Section "Features", added "Write Protected Registers" to the peripherals list. Section 3. "Signal Description", added a comment to the NRST line in Table 3-1, "Signal Description List".	8213 8350
	Boot strategies: Table 11-1, "External Clock and Crystal Frequencies allowed for Boot Sequence (in MHz)" added in Section 11.3.2 "Initialization Sequence".	8268
	RSTC: Section 12.2 "Embedded Characteristics", added a phrase about NRST.	8350
	RTC: Section 14.5 "Functional Description", updated the last phrase in the introduction. Section 14.6 "USB High Speed Device Port (RTC) User Interface", the RTC_CALR reset value changed from 0x001819819 to 0x01210720 in Table 14-1, "Register Mapping".	7893 8069
	MATRIX: Section 19.2 "Embedded Characteristics", removed a redundant phrase from the description of "One address decoder". Section 19.2 "Embedded Characteristics", fixed a typo: replaced "10 masters" with "11 masters" in the first line of the list.	8180
	EBI: Updated the hardware configuration schema in Section 20.2.8.1 "2x8-bit DDR2 on EBI".	8254
	PMC: Section 26.3 "Block Diagram", removed the "/1, /2" divider block in Figure 26-1 "Power Management Controller Block Diagram".	8400
	SPI: Missing flags (UNDES, TXBUFE, RXBUFF, ENDTX, ENDRX) and their definitions added in Section 29.8.5 "SPI Status Register", Section 29.8.6 "SPI Interrupt Enable Register", Section 29.8.7 "SPI Interrupt Disable Register", and Section 29.8.8 "SPI Interrupt Mask Register".	8247

Doc. Rev 6438J	Comments (Continued)	Change Request Ref.
	USART: Section 33.7.7.2 “Baud Rate”, changed the minimum CD value for SPI master mode from 4 to 6.	8344
	Electrical Characteristics: Added a conclusion phrase in Section 46.12.2 “Power-Up Sequence”.	8338
	Mechanical Characteristics Section 47.1 “Package Drawings”, changed the title, updated values and added a new line in Table 47-1, “Package Information”.	8185
	Errata: Added Section 49.1.10.2 “UHPHS/UDPHS: Bad Lock of the USB High speed transceiver DLL”. Added an introduction phrase about “SAM9G45 Errata - Revision B Parts” in Section 49.1.10 “USB High Speed Host Port (UHPHS) and Device Port (UDPHS)” and a reference to this section in Section 49.2.9 “USB High Speed Host Port (UHPHS) and Device Port (UDPHS)” (new section added). Added Section 49.2.9.1 “UHPHS/UDPHS: USB Does Not Start after Power-up” and Section 49.2.9.2 “UHPHS/UDPHS: Bad Lock of the USB High speed transceiver DLL” in Section 49.2.9 . Removed references to this section from Section 49.1.10 “USB High Speed Host Port (UHPHS) and Device Port (UDPHS)” and otherwise. Fixed typo in the generate_pulse_bias function in Section 49.1.10.2 “UHPHS/UDPHS: Bad Lock of the USB High speed transceiver DLL” and Section 49.2.9.2 “UHPHS/UDPHS: Bad Lock of the USB High speed transceiver DLL”. Updated the description and the workaround paragraphs in Section 49.1.10.2 “UHPHS/UDPHS: Bad Lock of the USB High speed transceiver DLL” andSection 49.2.9.2 “UHPHS/UDPHS: Bad Lock of the USB High speed transceiver DLL”.	8372 rfo rfo 8372

Doc. Rev 6438I	Comments	Change Request Ref.
	Errata: Added Boot errata related to AT45-series SPI DataFlash: Section 49.1.1.2 “Boot ROM: Boot issue on AT45-series SPI dataflash” and Section 49.2.1.2 “Boot ROM: Boot issue on AT45-series SPI dataflash” Removed section 49.2.8 ‘USB High Speed Host Port (UHPHS) and Device Port (UDPHS)’: solved in Rev. B Added Section 49.1.5 “RSTC: Software Reset During DDRAM Accesses” and Section 49.2.5 “RSTC: Software Reset During DDRAM Accesses”.	8080 8112 8111
	Fixed incorrectly applied variables of the datasheet components names.	8237

.

Doc. Rev 6438H	Comments	Change Request Ref.
	DDRSDRC: Section 22.8.3 “DDRSDRC Configuration Register”, DQMS bitfield changed to EBISHARE, and corresponding description changed too.	7899
	Electrical Characteristics: Table 46-14, “PLLA Characteristics”, Current Consumption values in active mode updated. Table 46-44, “RMII Mode”, EMAC 21 Max value changed: 17.8 --> 16.	7763 7981
	Errata: “Marking” moved from the Errata section to “SAM9G45 Mechanical Characteristics” .section. Section 49.2 “SAM9G45 Errata - Rev. B Parts” added, similar to Rev. A Parts, but without UHPHS: Packet Loss Issue in the UTMI Transceivers. Second sentence edited in “UHPHS/UDPHS: USB does not start after power-up” (Section 49.1.10.1 and Section 49.2.8.1). EMAC Errata added to Errata MRL A and B, as Section 49.1.3 “Ethernet MAC 10/100 (EMAC)”and Section 49.2.3 “Ethernet MAC 10/100 (EMAC)”.	7979 7981
	MATRIX: Reset value of CCFG_EBICSA register changed to 0x00070000 in Table 19-7, “Chip Configuration User Interface” and Section 19.7.6.3 “EBI Chip Select Assignment Register”	8007
	Ordering Information: Section 48. “SAM9G45 Ordering Information”, a second ordering code added: AT91SAM9G45B-CU. An MRL column added too.	7979

Doc. Rev 6438G	Comments	Change Request Ref.
	1st Page/headers & footers: (text where found) Product Line/Product naming convention changed - **AT91SAM ARM-based MPU / SAM9G45**	Marcom
	Introduction: Section 5.1 “Power Supplies”, replaced ground pin names by GNDIOM, GNDCORE, GNDANA, GNDIOP, GNDBU, GNDOSC, GNDUTMI. Reorganized text describing GND association to power supply pins. Section 1. “Description”, updated 2nd pararaph, 1st sentence. “...SAM9G45 supports DDR2....	7322 rfo: rfo
	DDRSDRC: Section 22.7.5 “DDRSDRC Timing 1 Parameter Register”, TXSNR bitfield description, number of cycles updated ... “between 0 and 255.”	7462
	HSMCI: Section 36.1 “Description”, HSMCI supports....SDIO V2.0 specification...	7384
	PMC: Figure 25-2 “Typical Slow Clock Crystal Oscillator Connection”, updated with GNDOSC. Figure 25-5 “Typical Crystal Connection”, updated with GNDOSC. Section 26.5 “Processor Clock Controller”, text revised.	7322 7392
	RTC: Section 14.6 “USB High Speed Device Port (RTC) User Interface”, typo in section title fixed.	7569
	SPI: Section 29.8.2 “SPI Mode Register”, bitfield 5 is occupied by WDRBT. Section 29.3 “Block Diagram”, removed extra block diagram.	7506 rfo
	SSC: Section 34.3 “Block Diagram”, Removed extra block diagram.	rfo
	TWI: Section 31.2 “Embedded Characteristics”, removed reference to PDC.	7384
	TRNG: Section 44.2.1 “TRNG Control Register”, added KEY bitfield.	7531
	UDPHS: Figure 38-3 “Board Schematic”, GND changed to GNDUTMI.	7332
	UHPHS: Figure 37-4 “Board Schematic to Interface UHP High-speed Device Controller”, GND changed to GNDUTMI	7332
	Electrical Characteristics: Table 46-23, “Analog Inputs”, updated Parameter: Input “Source” impedence. Table 46-7, “Main Oscillator Characteristics”, in the footnote, gnd changed to gndosc and in the figure below, GNDPLL changed to GNDOSC.	7519 7332
	Errata: Section 49.1.9.1 “UHPHS: Packet Loss Issue in the UTMI Transceivers”, added to errata. Section 49.1.10.1 “UHPHS/UDPHS: USB Does Not Start after Power-up”, added clairifying “Or:” to choices in “workaround”. Section 49.1.2.1 “ECC: Computation with a 1 clock cycle long NRD/NWE pulse”, HECC/ECC typo fixed.	7595 7352 7384

Doc. Rev 6438F	Comments	Change Request Ref.
	Bus Matrix - EBI_DRIVE and DDR_DRIVE bitfields edited in "EBI Chip Select Assignment Register" - "12-layer" Matrix instead of "11-layer"	 6930 7171
	DDRSDRC In Section 22.8.6 "DDRSDRC Timing Parameter 2 Register", - TRTP bitfield reset value (0 --> 2) changed. - 0 and 15' cycles changed into '0 and 7' in "TRTP: Read to Precharge". - TXARD (-->2), TXARDS (-->6), and TRPA (-->0) reset values changed. In Section 22.8.7 "DDRSDRC Low-power Register", UPD_MR bitfield added to the table at [21:20]. In Section 22.5.4.1 "Self Refresh Mode", UDP_EN bitfield replaced by UPD_MR.	 7134 7146
	Electrical Characteristics - Figure below Table 46-7, "Main Oscillator Characteristics" edited. - Section 46.14 "DDRSDRC Timings" updated. - Table 46-17 "I/O Characteristics" and Notes below edited. - Ultra low power Mode value changed in Table 46-3, "Power Consumption for Different Modes". - Section 46.15.1.1 "Maximum SPI Frequency" added.	 7063 7134 -7193 6926 7195 7173
	Errata - "Boot ROM" errata added. - "Static Memory Controller (SMC)" errata added. - "Touch Screen (TSADCC)" errata added. - "USB High Speed Host Port (UHPHS)" errata added. - 3 "Error Corrected Code Controller (ECC)" errata added: "ECC: Uncomplete parity status when error in ECC parity" , "ECC: Unsupported ECC per 512 words" and "ECC: Unsupported hardware ECC on 16-bit Nand Flash"	 7148 6977 7165 7194 7192
	External Memories - DQM0-3 added to Figure 20-4 "EBI Connections to Memory Devices". - Table 20-5, row 'A15' edited. - Section 20.2.7.7 "NAND Flash Support" edited. - Section 20. "External Memories" reorganized. - On Figure 6-1 "SAM9G45 Memory Mapping", 'DDR2-LPDDR-SDRAM' --> 'DDRSDRC1' and 'DDR2-LPDDR' --> 'DDRSDRC20'. - All 'DDR2SDRC' changed into 'DDRSDRC'.	 7123 7027 6924 6946
	Mechanical Characteristics - New Figure 47-1 "324-ball TFBGA Package Drawing" and Max. weight changed in Table 47-2 - All 'nominal' changed into 'typical'. - An empty square after letter 'V' removed from the Section 49.1 "SAM9G45 Errata - Rev. A Parts" table.	 6954 RFO
	PMC - Note added to Section 26.4 "Master Clock Controller" and Section 26.12.12 "PMC Master Clock Register".	 7106
	USART - LIN Mode condition now shown in Section 33. "Universal Synchronous Asynchronous Receiver Transmitter (USART)".	 6944

Doc. Rev 6438E	Comments	Change Request Ref.
	Introduction: “Two Three-channel 32-bit Timer/Counters” peripheral feature changed into “Two Three-channel 16-bit Timer/Counters” .	6828
	ECC row added to Figure 6-1 “SAM9G45 Memory Mapping”	6842
	Typos corrected in Table 8-1: AC97 --> AC97C (also in Table 24-1 and Table 41-1), PWMC --> PWM, RNG --> TRNG (also in Figure 2-1 and Table 46-4)	RFO
	Bus Matrix (MATRIX): Figure 19-1 “DDR Multi-port”, and text above and below added. 1 row and 1 column added to Table 19-3 and Table 19-4.	6797
	DDR/SDR SDRAM Controller (DDRSDRC): “NO_OPTI” bit removed. “DIS_ANTICIP_READ” description edited.	6871
	Electrical Characteristics: Section 46.14 “DDRSDRC Timings”, list of Supported speed grade limitations updated.	6776
	Section 46.11 “Touch Screen ADC (TSADC)”, TTH (ns) formula edited. Last sentence in the Note added.	6800 RFO
	SPI Master Mode figure titles reversed between Figure 46-5 and Figure 46-6. SPI Master and Slave Mode figure titles edited again, from Figure 46-5 “SPI Master Mode 1 and 2” to Figure 46-8 “SPI Slave Mode 1 and 2”	6847 6872
	Table 46-2 ‘DC Characteristics’, I_{SC} values changed.	6903
	Ethernet MAC 10/100 (EMAC): Wake-on-LAN feature activated, including Section 35.4.12 “Wake-on-LAN Support” and Section 35.6.26 “Wake-on-LAN Register”. EMAC interrupt on Wake-on-LAN Event activated.	6836 6838
	Peripheral DMA Controller (PDC): Typos corrected in Table 24-1: AC97 --> AC97C and TSDAC --> TSADCC	RFO
	Power Management Controller (PMC): Section 26.12.13 “PMC Programmable Clock Register”, CSS and SLCMCK fields edited.	6844
	Universal Synchronous Asynchronous Receiver Transmitter (USART): Section 33. “Universal Synchronous Asynchronous Receiver Transmitter (USART)”, SPI feature added.	6837

Doc. Rev 6438D	Comments	Change Request Ref.
	Introduction: "Features" part was edited.	6715
	LFBGA replaced by TFBGA in "Features" part and Section 4.1	RFO
	Section 3. "Signal Description", Table 3-1 , Touch Screen Analog-to-Digital Converter9 part, was edited.	6647
	VDDCORE removed from "Ground pins GND are common to..." sentence in Section 5.1 "Power Supplies"	RFO
	Section 6.3 "I/O Drive Selection and Delay Control" was added.	6702
	Figure 6.3 was removed. 0x00500000 changed into 0x00400000 in Section 6.2.3 "Internal ROM". FAST and SLOW changed into High and Low in Section 6.3.1 "I/O Drive Selection"	6715
	AT91SAM9G45 Debug and Test: Value 0x819B 05A1 changed into 0x819B 05A1 in Section 10.6.4 "Debug Unit"	6715
	Boot strategies: Section 11.4.3.1 "NAND Flash Boot", and Table 11-4, CS0 changed into CS3. Section 11.4.3.4 "TWI EEPROM Boot" and Table 11-4, TWI, TWD and TWCK changed into TWI0, TWD0 and TWCK0.	6682
	DDR/SDR SDRAM Controller (DDRSDRC): Watermarks removed from Section 22. "DDR/SDR SDRAM Controller (DDRSDRC)".	RFO
	Electrical Characteristics: A "Core Power Supply POR Characteristics" section has been added at the end of Section 46. "SAM9G45 Electrical Characteristics".	6664
	Section 46.8 "PLL Characteristics" , a Startup Time (T) line was added to Table 46-14 and Table 46-16. 2 values were added to Clock Characteristics Table 46-4 and Table 46-5.	6672
	The following sections were added: Section 46.13 "SMC Timings", Section 46.14 "DDRSDRC Timings", Section 46.15 "Peripheral Timings"	6637
	5 ripple values added to Table 46-2 on page 1139.	6689
	Figure 46-5 and Figure 46-6 titles reversed.	6769
	Maximum Operating Voltage values edited in Table 46-1 on page 1139. Table 46-2 on page 1139 updated: - V_{T-} and V_{T+} edited; V_{HYS} added. - I_O ranges edited. - Isc max value changed into 'TBD'. Table 46-17 on page 1148, and Note below, edited. Section 46.10, I/O Drive Level, removed.	RFO
	External Memories: Section 20.1.6.1 "2x8-bit DDR2" title changed (was '16-bit DDR2') Section 20.2.8.2 "16-bit LPDDR on EBI" added	6741

Doc. Rev 6438D	Comments (Continued)	Change Request Ref.
	LCD Controller (LCDC): Section 45.12.12 “LCD Timing Configuration Register 1”, ‘-’ replaced by ‘1’ for bit 31, and ‘Bit 31 must be written to 1’ added to VHDLY definition.	6685
	Parallel Input/Output Controller (PIO): - DELAY Registers were addded in a Section 30.4.12 “Programmable I/O Delays” and associated register description added in a Section 30.6.30 “PIO I/O Delay Register”. - “Write Protected Registers” description added, together with Section 30.6.31 “PIO Write Protect Mode Register”and Section 30.6.32 “PIO Write Protect Status Register”. In Section 30.6.11 “PIO Clear Output Data Register”, “P0-P31: Set Output Data” changed into “P0-P31: Clear Output Data” All ‘slewrate’ changed into ‘drive’. All ‘IO’ changed into ‘I/O’. All Section 30.6 “Parallel Input/Output Controller (PIO) User Interface” headers now start with ‘PIO’ only. Any extra ‘Controller’ or ‘Controller PIO’ removed.	6715
	Static Memory Controller (SMC): Table 21-5 removed from Section 21.8.6 “Reset Values of Timing Parameters”. Cross-referenced Table 21-8 instead.	6742
	USB Host Port: Section 37. “USB High Speed Host Port (UHPHS)” , HS (High Speed) was added to the title.	6644

Doc. Rev 6438C	Comments	Change Request Ref.
	Introduction: Section 3. “Signal Description” , Table 3-1, in “Reset/Test” description, NRST pin updated with note concerning NRST configuration. Section 4. “Package and Pinout”, Table 4-1 updated.	6600 6639
	Boot Program: Section 11.5.2.1 “Supported External Crystal/External Clocks”, ...”supports 12 MHz”...	6598
	RSTC: Section 12.5 “USB High Speed Device Port (UDPHS) User Interface” Table 12-1 Mode register backup reset value is 0x0000 0001.	6639

Doc. Rev 6438B	Comments	Change Request Ref.
	DDRSDRC: Section 22.7.3 “DDRSDRC Configuration Register”, bit named ENRDM removed from register. Section 22.7.9 “DDRSDRC DLL Register” bits named, SDCOVF, SDCUDF, SDERF, SDVAL, SDCVAL removed from register.	6606

Doc. Rev 6438A	Comments	Change Request Ref.
6438A	First issue	

Table of Contents

Description ***1***

1 Features ***2***

2 Block Diagram ***3***

3 Signal Description ***4***

4 Package and Pinout ***11***

4.1 Mechanical Overview of the 324-ball TFBGA Package 11

4.2 324-ball TFBGA Package Pinout 12

5 Power Considerations ***14***

5.1 Power Supplies 14

6 Memories ***15***

6.1 Memory Mapping 16

6.2 Embedded Memories 16

6.3 I/O Drive Selection and Delay Control 18

7 System Controller ***20***

7.1 System Controller Mapping 20

7.2 System Controller Block Diagram 21

7.3 Chip Identification 22

7.4 Backup Section 22

8 Peripherals ***23***

8.1 Peripheral Mapping 23

8.2 Peripheral Identifiers 23

8.3 Peripheral Interrupts and Clock Control 24

8.4 Peripheral Signals Multiplexing on I/O Lines 25

9 ARM926EJ-S Processor Overview ***31***

9.1 Description 31

9.2 Embedded Characteristics 32

9.3 Block Diagram 33

9.4 ARM9EJ-S Processor 34

9.5 CP15 Coprocessor 42

9.6 Memory Management Unit (MMU) 44

9.7Caches and Write Buffer 46
9.8Tightly-Coupled Memory Interface 48
9.9Bus Interface Unit 49

10 SAM9G45 Debug and Test 51

10.1Description 51
10.2Embedded Characteristics 51
10.3Block Diagram 52
10.4Application Examples 53
10.5Debug and Test Pin Description 54
10.6Functional Description 55

11 Boot Strategies 57

11.1Boot Program 57
11.2Flow Diagram 58
11.3Device Initialization 59
11.4NVM Boot 60
11.5SAM-BA Monitor 66

12 Reset Controller (RSTC) 71

12.1Description 71
12.2Embedded Characteristics 71
12.3Block Diagram 71
12.4Functional Description 72
12.5Reset Controller (RSTC) User Interface 81

13 Real-time Timer (RTT) 85

13.1Description 85
13.2Embedded Characteristics 85
13.3Block Diagram 85
13.4Functional Description 85
13.5Real-time Timer (RTT) User Interface 87

14 Real-time Clock (RTC) 91

14.1Description 91
14.2Embedded Characteristics 91
14.3Block Diagram 92
14.4Product Dependencies 93
14.5Functional Description 93
14.6Real-time Clock (RTC) User Interface 96

15 Periodic Interval Timer (PIT) 109

15.1Description 109

15.2Embedded Characteristics 109

15.3Block Diagram 109

15.4Functional Description 110

15.5Periodic Interval Timer (PIT) User Interface 111

16 Watchdog Timer (WDT) 115

16.1Description 115

16.2Embedded Characteristics 115

16.3Block Diagram 115

16.4Functional Description 116

16.5Watchdog Timer (WDT) User Interface 118

17 Shutdown Controller (SHDWC) 121

17.1Description 121

17.2Embedded Characteristics 121

17.3Block Diagram 121

17.4I/O Lines Description 122

17.5Product Dependencies 122

17.6Functional Description 122

17.7 Shutdown Controller (SHDWC) User Interface 123

18 General Purpose Backup Registers (GPBR) 127

18.1Description 127

18.2Embedded Characteristics 127

18.3General Purpose Backup Registers (GPBR) User Interface 127

19 Bus Matrix (MATRIX) 129

19.1Description 129

19.2Embedded Characteristics 129

19.3Memory Mapping 133

19.4Special Bus Granting Mechanism 133

19.5Arbitration 134

19.6Write Protect Registers 137

19.7Bus Matrix (MATRIX) User Interface 138

20 External Memories 153

20.1DDRSDRC0 Multi-port DDRSDR Controller 154

20.2External Bus Interface (EBI) 158

21 Static Memory Controller (SMC) 183

21.1Description 183

21.2I/O Lines Description 183

21.3Multiplexed Signals 183

21.4Application Example 184

21.5Product Dependencies 184

21.6External Memory Mapping 185

21.7Connection to External Devices 185

21.8Standard Read and Write Protocols 189

21.9Automatic Wait States 197

21.10Data Float Wait States 201

21.11External Wait 205

21.12Slow Clock Mode 211

21.13Asynchronous Page Mode 214

21.14Programmable IO Delays 217

21.15Static Memory Controller (SMC) User Interface 218

22 SDR SDRAM Controller (DDRSDRC) 225

22.1Description 225

22.2Embedded Characteristics 226

22.3DDRSDRC Module Diagram 227

22.4Initialization Sequence 228

22.5Functional Description 232

22.6Software Interface/SDRAM Organization, Address Mapping 250

22.7Programmable IO Delays 252

22.8DDR SDR SDRAM Controller (DDRSDRC) User Interface 253

23 Error Corrected Code Controller (ECC) 271

23.1Description 271

23.2Block Diagram 271

23.3Functional Description 271

23.4Error Corrected Code Controller (ECC) User Interface 276

23.5Registers for 1 ECC for a page of 512/1024/2048/4096 bytes 287

23.6Registers for 1 ECC per 512 bytes for a page of 512/2048/4096 bytes, 8-bit word 289

23.7Registers for 1 ECC per 256 bytes for a page of 512/2048/4096 bytes, 8-bit word 297

24 Peripheral DMA Controller (PDC) 313

24.1Description 313
24.2Embedded Characteristics 313
24.3Block Diagram 314
24.4Functional Description 315
24.5Peripheral DMA Controller (PDC) User Interface 317

25 Clock Generator 327

25.1Description 327
25.2Embedded Characteristics 327
25.3Slow Clock Crystal Oscillator 328
25.4Slow Clock RC Oscillator 328
25.5Slow Clock Selection 328
25.6Main Oscillator 331
25.7Divider and PLLA Block 332
25.8UTMI Bias and Phase Lock Loop Programming 333

26 Power Management Controller (PMC) 334

26.1Description 334
26.2Embedded Characteristics 334
26.3Block Diagram 335
26.4Master Clock Controller 336
26.5Processor Clock Controller 336
26.6USB Device and Host clocks 337
26.7LP-DDR/DDR2 Clock 337
26.8Peripheral Clock Controller 337
26.9Programmable Clock Output Controller 338
26.10Programming Sequence 338
26.11Clock Switching Details 341
26.12Power Management Controller (PMC) User Interface 344

27 Advanced Interrupt Controller (AIC) 363

27.1Description 363
27.2Embedded Characteristics 363
27.3Block Diagram 364
27.4Application Block Diagram 364
27.5AIC Detailed Block Diagram 364
27.6I/O Line Description 365
27.7Product Dependencies 365
27.8Functional Description 366

27.9Advanced Interrupt Controller (AIC) User Interface 376

28 Debug Unit (DBGU) 387

28.1Description 387

28.2Embedded Characteristics 387

28.3Block Diagram 388

28.4Product Dependencies 389

28.5UART Operations 389

28.6Debug Unit (DBGU) User Interface 396

29 Serial Peripheral Interface (SPI) 411

29.1Description 411

29.2Embedded Characteristics 411

29.3Block Diagram 412

29.4Application Block Diagram 412

29.5Signal Description 413

29.6Product Dependencies 414

29.7Functional Description 415

29.8Serial Peripheral Interface (SPI) User Interface 426

30 Parallel Input/Output Controller (PIO) 439

30.1Description 439

30.2Block Diagram 440

30.3Product Dependencies 441

30.4Functional Description 442

30.5I/O Lines Programming Example 447

30.6Parallel Input/Output Controller (PIO) User Interface 449

31 Two-wire Interface (TWI) 469

31.1Description 469

31.2Embedded Characteristics 469

31.3List of Abbreviations 470

31.4Block Diagram 470

31.5Application Block Diagram 471

31.6Product Dependencies 471

31.7Functional Description 472

31.8Master Mode 473

31.9Multi-master Mode 485

31.10Slave Mode 488

31.11Two-wire Interface (TWI) User Interface 495

32 Timer Counter (TC) 509

32.1Description 509

32.2Embedded Characteristics 510

32.3Block Diagram 510

32.4Pin Name List 511

32.5Product Dependencies 511

32.6Functional Description 514

32.7Timer Counter (TC) User Interface 526

33 Universal Synchronous Asynchronous Receiver Transmitter (USART) 545

33.1Description 545

33.2Embedded Characteristics 546

33.3Block Diagram 547

33.4Application Block Diagram 548

33.5I/O Lines Description 548

33.6Product Dependencies 549

33.7Functional Description 551

33.8Universal Synchronous Asynchronous Receiver Transmitter (USART) User Interface 601

34 Synchronous Serial Controller (SSC) 631

34.1Description 631

34.2Embedded Characteristics 631

34.3Block Diagram 632

34.4Application Block Diagram 633

34.5Pin Name List 634

34.6Product Dependencies 634

34.7Functional Description 636

34.8SSC Application Examples 648

34.9Synchronous Serial Controller (SSC) User Interface 650

35 Ethernet MAC 10/100 (EMAC) 673

35.1Description 673

35.2Embedded Characteristics 673

35.3Block Diagram 674

35.4Functional Description 675

35.5Programming Interface 686

35.6Ethernet MAC 10/100 (EMAC) User Interface 689

36 High Speed MultiMedia Card Interface (HSMCI) 727

36.1Description 727

36.2Embedded Characteristics 727

36.3Block Diagram 728

36.4Application Block Diagram 729

36.5Pin Name List 729

36.6Product Dependencies 730

36.7Bus Topology 731

36.8High Speed MultiMedia Card Operations 733

36.9SD/SDIO Card Operation 750

36.10CE-ATA Operation 751

36.11HSMCI Boot Operation Mode 752

36.12HSMCI Transfer Done Timings 754

36.13High Speed Multimedia Card Interface (HSMCI) User Interface 756

37 USB High Speed Host Port (UHPHS) 785

37.1Description 785

37.2Embedded Characteristics 785

37.3Block Diagram 786

37.4Product Dependencies 788

37.5I/O Lines 788

37.6Typical Connection 790

38 USB High Speed Device Port (UDPHS) 791

38.1Description 791

38.2Embedded Characteristics 791

38.3Block Diagram 793

38.4Typical Connection 794

38.5Functional Description 795

38.6USB High Speed Device Port (UDPHS) User Interface 817

39 Image Sensor Interface (ISI) 857

39.1Description 857

39.2Embedded Characteristics 857

39.3Block Diagram 858

39.4Functional Description 859

39.5Image Sensor Interface (ISI) User Interface 867

40 Touch Screen ADC Controller (TSADCC) 897

40.1Description 897
40.2Embedded Characteristics 897
40.3Block Diagram 898
40.4Signal Description 899
40.5Product Dependencies 899
40.6Analog-to-digital Converter Functional Description 900
40.7Touch Screen 901
40.8Conversion Results 906
40.9Conversion Triggers 908
40.10Operating Modes 908
40.11Touch Screen ADC Controller (TSADCC) User Interface 915

41 DMA Controller (DMAC) 933

41.1Description 933
41.2Embedded Characteristics 933
41.3Block Diagram 935
41.4Functional Description 936
41.5DMAC Software Requirements 962
41.6DMA Controller (DMAC) User Interface 963

42 Pulse Width Modulation Controller (PWM) 987

42.1Description 987
42.2Embedded Characteristics 987
42.3Block Diagram 988
42.4I/O Lines Description 988
42.5Product Dependencies 988
42.6Functional Description 989
42.7Pulse Width Modulation Controller (PWM) User Interface 997

43 AC97 Controller (AC97C) 1009

43.1Description 1009
43.2Embedded Characteristics 1009
43.3Block Diagram 1010
43.4Pin Name List 1011
43.5Application Block Diagram 1011
43.6Product Dependencies 1012
43.7Functional Description 1013
43.8AC97 Controller (AC97C) User Interface 1022

44 True Random Number Generator (TRNG) 1043

44.1Description 1043

44.2True Random Number Generator (TRNG) User Interface 1044

45 LCD Controller (LCDC) 1051

45.1Description 1051

45.2Embedded Characteristics 1051

45.3Block Diagram 1052

45.4I/O Lines Description 1053

45.5Product Dependencies 1053

45.6Functional Description 1055

45.7Interrupts 1075

45.8Configuration Sequence 1075

45.9Double-buffer Technique 1076

45.102D Memory Addressing 1077

45.11Register Configuration Guide 1078

45.12LCD Controller (LCDC) User Interface 1079

46 SAM9G45 Electrical Characteristics 1111

46.1Absolute Maximum Ratings 1111

46.2DC Characteristics 1111

46.3Power Consumption 1113

46.4Clock Characteristics 1115

46.5Main Oscillator Characteristics 1115

46.632 kHz Oscillator Characteristics 1117

46.732 kHz RC Oscillator Characteristics 1118

46.8PLL Characteristics 1119

46.9I/Os 1120

46.10USB HS Characteristics 1120

46.11Touch Screen ADC (TSADC) 1122

46.12Core Power Supply POR Characteristics 1123

46.13SMC Timings 1124

46.14DDRSDRC Timings 1128

46.15Peripheral Timings 1128

47 SAM9G45 Mechanical Characteristics 1145

47.1Package Drawings 1145

47.2Soldering Profile 1146

47.3Marking 1147

48 SAM9G45 Ordering Information 1148

49 SAM9G45 Errata 1149

49.1SAM9G45 Errata - Rev. A Parts 1149

49.2SAM9G45 Errata - Rev. B Parts 1154

49.3SAM9G45 Errata - Rev. C Parts 1159

Revision History 1163

.....i

Table of Contents i

Enabling Unlimited Possibilities®

Atmel Corporation
1600 Technology Drive
San Jose, CA 95110
USA
Tel: (+1) (408) 441-0311
Fax: (+1) (408) 487-2600
www.atmel.com

Atmel Asia Limited
Unit 01-5 & 16, 19F
BEA Tower, Millennium City 5
418 Kwun Tong Road
Kwun Tong, Kowloon
HONG KONG
Tel: (+852) 2245-6100
Fax: (+852) 2722-1369

Atmel Munich GmbH
Business Campus
Parkring 4
D-85748 Garching b. Munich
GERMANY
Tel: (+49) 89-31970-0
Fax: (+49) 89-3194621

Atmel Japan G.K.
16F Shin-Osaki Kangyo Bldg
1-6-4 Osaki, Shinagawa-ku
Tokyo 141-0032
JAPAN
Tel: (+81) (3) 6417-0300
Fax: (+81) (3) 6417-0370

© 2013 Atmel Corporation. All rights reserved. / Rev–ATARM–12-Feb-13

Atmel®, Atmel logo and combinations thereof, Enabling Unlimited Possibilities®, SAM-BA® and others are registered trademarks or trademarks of Atmel Corporation or its subsidiaries. ARM®, Thumb® and the ARM®Powered logo and others are registered trademarks or trademarks ARM Ltd. Windows® and others are registered trademarks or trademarks of Microsoft Corporation in the US and/or other countries. Other terms and product names may be trademarks of others.

Disclaimer: The information in this document is provided in connection with Atmel products. No license, express or implied, by estoppel or otherwise, to any intellectual property right is granted by this document or in connection with the sale of Atmel products. EXCEPT AS SET FORTH IN THE ATMEL TERMS AND CONDITIONS OF SALES LOCATED ON THE ATMEL WEBSITE, ATMEL ASSUMES NO LIABILITY WHATSOEVER AND DISCLAIMS ANY EXPRESS, IMPLIED OR STATUTORY WARRANTY RELATING TO ITS PRODUCTS INCLUDING, BUT NOT LIMITED TO, THE IMPLIED WARRANTY OF MERCHANTABILITY, FITNESS FOR A PARTICULAR PURPOSE, OR NON-INFRINGEMENT. IN NO EVENT SHALL ATMEL BE LIABLE FOR ANY DIRECT, INDIRECT, CONSEQUENTIAL, PUNITIVE, SPECIAL OR INCIDENTAL DAMAGES (INCLUDING, WITHOUT LIMITATION, DAMAGES FOR LOSS AND PROFITS, BUSINESS INTERRUPTION, OR LOSS OF INFORMATION) ARISING OUT OF THE USE OR INABILITY TO USE THIS DOCUMENT, EVEN IF ATMEL HAS BEEN ADVISED OF THE POSSIBILITY OF SUCH DAMAGES. Atmel makes no representations or warranties with respect to the accuracy or completeness of the contents of this document and reserves the right to make changes to specifications and products descriptions at any time without notice. Atmel does not make any commitment to update the information contained herein. Unless specifically provided otherwise, Atmel products are not suitable for, and shall not be used in, automotive applications. Atmel products are not intended, authorized, or warranted for use as components in applications intended to support or sustain life.

Мы молодая и активно развивающаяся компания в области поставок электронных компонентов. Мы поставляем электронные компоненты отечественного и импортного производства напрямую от производителей и с крупнейших складов мира.

Благодаря сотрудничеству с мировыми поставщиками мы осуществляем комплексные и плановые поставки широчайшего спектра электронных компонентов.

Собственная эффективная логистика и склад в обеспечивает надежную поставку продукции в точно указанные сроки по всей России.

Мы осуществляем техническую поддержку нашим клиентам и предпродажную проверку качества продукции. На все поставляемые продукты мы предоставляем гарантию .

Осуществляем поставки продукции под контролем ВП МО РФ на предприятия военно-промышленного комплекса России , а также работаем в рамках 275 ФЗ с открытием отдельных счетов в уполномоченном банке. Система менеджмента качества компании соответствует требованиям ГОСТ ISO 9001.

Минимальные сроки поставки, гибкие цены, неограниченный ассортимент и индивидуальный подход к клиентам являются основой для выстраивания долгосрочного и эффективного сотрудничества с предприятиями радиоэлектронной промышленности, предприятиями ВПК и научно-исследовательскими институтами России.

С нами вы становитесь еще успешнее!

Наши контакты:

Телефон: +7 812 627 14 35

Электронная почта: sales@st-electron.ru

Адрес: 198099, Санкт-Петербург, Промышленная ул, дом № 19, литера Н, помещение 100-Н Офис 331