CONTROL KNOBS, MACHINED ALUMINUM

FEATURES

- Anodized natural or black gloss finish.
- Anti-static plastic insert. (on many models)
- Positive retention #6-32 set screws.
- Fits 1/8" dia. & 1/4" dia. shafts.
- Functionally rugged.
- Special designs available.

MATERIALS

Knob:	Machined aluminium (with plastic insert, where indicated).
Threaded Insert:	Brass.
Setscrew:	Heat treated high alloy steel with cup point and hex head, or slotted head. Note: 1 or 2 supplied, depending on model.

Notes: Dims. in inches & (millimeters). Shaft size is last 3 digits of Model No.

SPECIFICATIONS SUBJECT TO CHANGE WITHOUT NOTICE.

41005 SERIES

Smooth finish with knurled black plastic insert and black indicator line on top

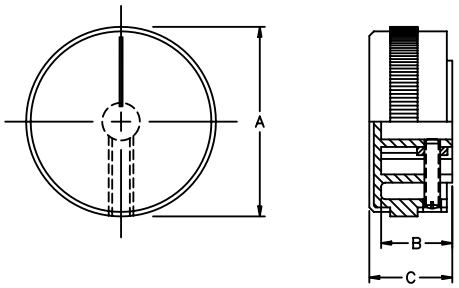

Note: Knob color is natural only for this Series.

MODEL (Color natural)	A	B	C
410051A1/8	.630 (16.0)	.512 (13.0)	.590 (15.0)
410051A1/4	.630 (16.0)	.512 (13.0)	.590 (15.0)
410053A1/8	.874 (22.2)	.472 (12.0)	.531 (13.5)
410053A1/4	.874 (22.2)	.646 (16.4)	.690 (17.5)
410055A1/4	1.260 (32.0)	.472 (12.0)	.551 (14.0)

42001 SERIES

Fluted with plastic insert and line indicator on side

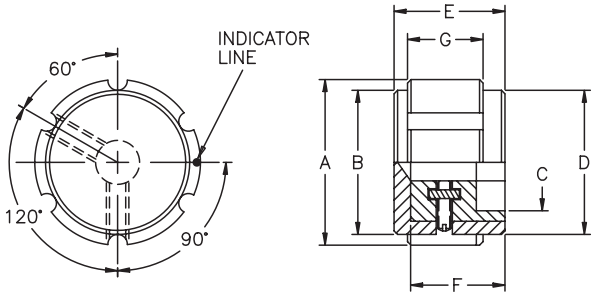

MODEL (Color-natural)	MODEL (Color-black)	A	B	C	D	E	F	G
420011A1/8*	**420011B1/8***	.500 (12.7)	.430 (10.9)	.380 (9.7)	.430 (10.9)	.630 (16.0)	.512 (13.0)	.430 (10.9)
420011A1/4*	**420011B1/4***	.500 (12.7)	.430 (10.9)	.380 (9.7)	.430 (10.9)	.630 (16.0)	.512 (13.0)	.430 (10.9)
420013A1/4	**420013B1/4**	.748 (19.0)	.638 (16.2)	.591 (15.0)	.661 (16.8)	.630 (16.0)	.512 (13.0)	.429 (10.9)
420015A1/4	**420015B1/4**	.941 (23.9)	.819 (20.8)	.709 (18.0)	.819 (20.8)	.630 (16.0)	.512 (13.0)	.429 (10.9)

* indicates solid aluminum knob

42003 SERIES

Diamond knurl plastic insert and line indicator on side

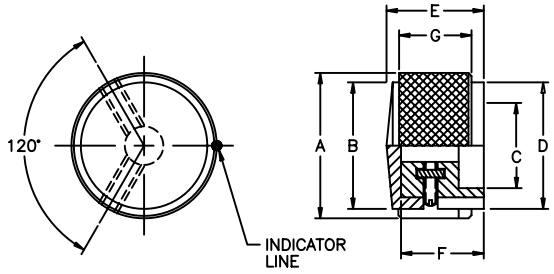

Note: 420031A1/8 & 420031A1/4 have only one set screw.

MODEL (Color-natural)	MODEL (Color-black)	A	B	C	D	E	F	G
420031A1/8*	**420031B1/8***	.500 (12.7)	.402 (10.2)	.380 (9.7)	.402 (10.2)	.634 (16.1)	.516 (13.1)	.469 (11.9)
420031A1/4*	**420031B1/4***	.500 (12.7)	.402 (10.2)	.380 (9.7)	.402 (10.2)	.634 (16.1)	.516 (13.1)	.469 (11.9)
420033A1/4*	**420033B1/4***	.748 (19.0)	.681 (17.3)	.591 (15.0)	.681 (17.3)	.634 (16.1)	.516 (13.1)	.469 (11.9)
420035A1/4*	**420035B1/4***	.940 (23.9)	.870 (22.1)	.709 (18.0)	.870 (22.1)	.634 (16.1)	.516 (13.1)	.469 (11.9)
420037A1/4*	**420037B1/4***	1.252 (31.8)	1.170 (29.6)	.980 (24.9)	1.170 (29.6)	.748 (19.0)	.630 (16.0)	.591 (15.0)

* indicates solid aluminum knob

U

Notes: Dims. in inches & (millimeters). Shaft size is last 3 digits of Model No.

42004 SERIES Straight knurl with plastic insert and line indicator on top

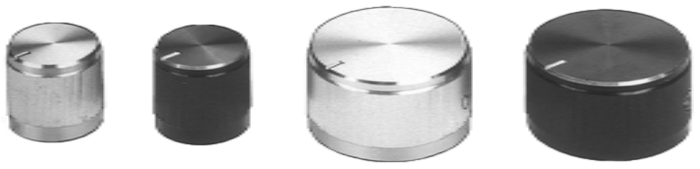

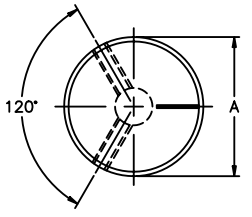

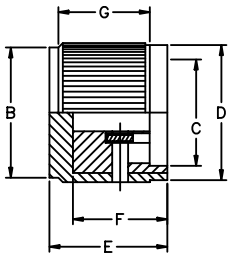

Note: 420041A1/8 & 420041A1/4 have only one set screw.

MODEL (Color-natural)	MODEL (Color-black)	A	B	C	D	E	F	G
420041A1/8*	**420041B1/8***	.500 (12.7)	.480 (12.2)	.378 (9.6)	.480 (12.2)	.788 (20)	.520 (13.2)	.453 (11.5)
420041A1/4*	**420041B1/4***	.500 (12.7)	.480 (12.2)	.378 (9.6)	.480 (12.2)	.788 (20)	.520 (13.2)	.453 (11.5)
420043A1/4	**420043B1/4**	.748 (19.0)	.728 (18.5)	.524 (13.3)	.728 (18.5)	.788 (20)	.520 (13.2)	.453 (11.5)
420045A1/4	**420045B1/4**	.929 (23.6)	.870 (22.1)	.720 (18.3)	.870 (22.1)	.788 (20)	.520 (13.2)	.453 (11.5)

* indicates solid aluminum knob

42005 SERIES Solid aluminum with straight knurl and arrowhead indicator on top

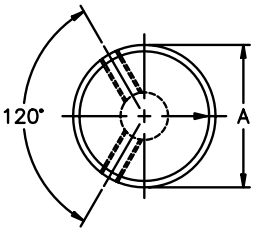

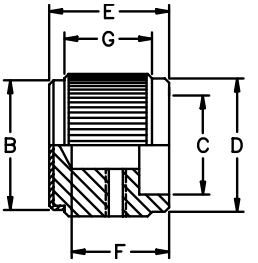

Note: 420051A1/8 & 420051A1/4 have only one set screw.

MODEL (Color-natural)	MODEL (Color-black)	A	B	C	D	E	F	G
420051A1/8*	**420051B1/8***	.500 (12.7)	.480(12.2)	.378 (9.6)	.480 (12.2)	.638 (16.2)	.520 (13.2)	.453 (11.5)
420051A1/4*	**420051B1/4***	.500 (12.7)	.480 (12.2)	.378 (9.6)	.480 (12.2)	.638 (16.2)	.520 (13.2)	.453 (11.5)
420053A1/4	**420053B1/4**	.748 (19.0)	.728 (18.5)	.524 (13.3)	.728 (18.5)	.638 (16.2)	.520 (13.2)	.453 (11.5)
420055A1/4	**420055B1/4**	.929 (23.6)	.870 (23.2)	.720 (18.3)	.870 (23.2)	.638 (16.2)	.520 (13.2)	.453 (11.5)

* indicates solid aluminum knob

42006 SERIES Straight knurl with plastic insert and line indicator on top and side

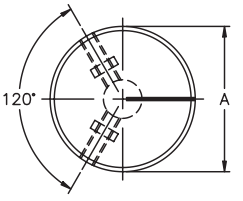

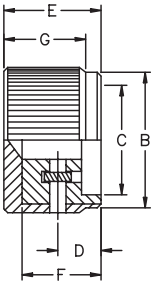

Note: 420061A1/8 & 420061A1/4 have only one set screw.

MODEL (Color-natural)	MODEL (Color-black)	A	B	C	D	E	F	G
420061A1/8*	**420061B1/8***	.500 (12.7)	.480 (12.2)	.378 (9.6)	.280 (7.1)	.638 (16.2)	.520 (13.2)	.524 (13.3)
420061A1/4*	**420061B1/4***	.500 (12.7)	.480 (12.2)	.378 (9.6)	.280 (7.1)	.638 (16.2)	.520 (13.2)	.524 (13.3)
420063A1/4	**420063B1/4**	.748 (19.0)	.728 (18.5)	.524 (13.3)	.280 (7.1)	.638 (16.2)	.520 (13.2)	.524 (13.3)
420065A1/4	**420065B1/4**	.940 (23.9)	.870 (23.2)	.720 (18.3)	.280 (7.1)	.638 (16.2)	.520(13.2)	.524 (13.3)
420067A1/4	**420067B1/4**	1.248 (31.7)	1.220 (31.0)	1.030 (26.2)	.280 (7.1)	.638 (16.2)	.512 (130)	.531 (13.5)

* indicates solid aluminum knob

42007 SERIES Serrated diamond trim with plastic insert and dot indicator on top

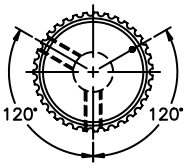

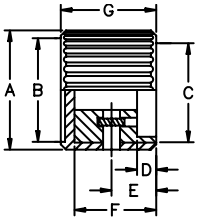

Note: 420071A1/8 & 420072A1/8 have only one set screw. * indicates solid aluminum knob

MODEL (Color-natural)	MODEL (Color-black)	A	B	C	D	E	F	G
420071A1/8*	**420071B1/8***	.370 (9.4)	.268 (6.8)	.276 (7.0)	.091 (2.3)	.200 (5.1)	.240 (6.1)	.300 (7.6)
420072A1/8*	**420072B1/8***	.370 (9.4)	.268 (6.8)	.276 (7.0)	.091 (2.3)	.200 (5.1)	.358 (9.1)	.449 (11.4)
420072A1/4*	**420072B1/4***	.370 (9.4)	.268 (6.8)	.276 (7.0)	.091 (2.3)	.200 (5.1)	.358 (9.1)	.449 (11.4)
420073A1/8*	**420073B1/8***	.492 (12.5)	.386 (9.8)	.380 (9.7)	.120 (3.1)	.280 (7.1)	.512 (13.0)	.598 (15.2)
420073A1/4*	**420073B1/4***	.492 (12.5)	.386 (9.8)	.380 (9.7)	.120 (3.1)	.280 (7.1)	.512 (13.0)	.598 (15.2)
420074A1/4	**420074B1/4**	.748 (19.0)	.650 (16.5)	.587 (14.9)	.120 (3.1)	.280 (7.1)	.512 (13.0)	.598 (15.2)

* indicates solid aluminum knob

SPECIFICATIONS SUBJECT TO CHANGE WITHOUT NOTICE.

APEM, 63 Neck Road, HAVERHILL, MA USA 01835-0788 TOLL FREE: (877) 246-7890 FAX: (978) 372-3534 E-mail: info@apem.com

Notes: Dims. in inches & (millimeters). Shaft size is last 3 digits of Model No.

42008 SERIES Square serrations with plastic insert and line indicator on side

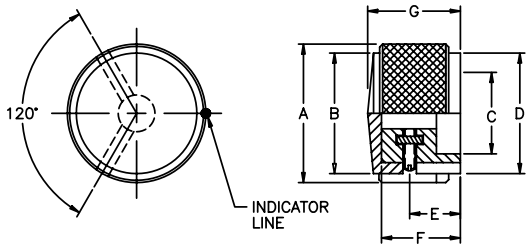

Note: 420081A1/8 & 420081A1/4 have only one set screw.

MODEL (Color-natural)	MODEL (Color-black)	A	B	C	D	E	F	G
420081A1/8*	**420081B1/8***	.500 (12.7)	.402 (10.2)	.380 (9.7)	.402 (10.2)	.280 (7.1)	.512 (13.0)	.630 (16.0)
420081A1/4*	**420081B1/4***	.500 (12.7)	.402 (10.2)	.380 (9.7)	.402 (10.2)	.280 (7.1)	.512 (13.0)	.630 (16.0)
420083A1/4	**420083B1/4**	.748 (19.0)	.681 (17.3)	.587 (14.9)	.681 (17.3)	.280 (7.1)	.512 (13.0)	.630 (16.0)
420085A1/4	**420085B1/4**	.940 (23.9)	.870 (22.1)	.709 (18.0)	.870 (22.1)	.280 (7.1)	.512 (13.0)	.630 (16.0)
420087A1/4	**420087B1/4**	1.248 (31.7)	1.165 (29.6)	.985 (25)	1.165 (29.6)	.280 (7.1)	.630 (16.0)	.630 (16.0)

* indicates solid aluminum knob

42009 SERIES Straight knurl with plastic insert and line indicator on top and chamfer around top

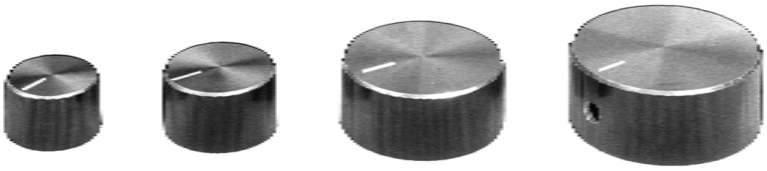

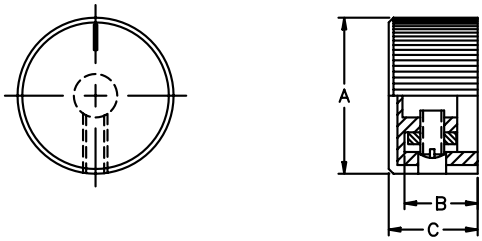

Note: Knob color is black only for this Series.

MODEL (Color black)	A	B	C
420091B1/8	.732 (18.6)	.374 (9.5)	.472 (12.0)
420091B1/4	.732 (18.6)	.374 (9.5)	.472 (12.0)
420092B1/4	.898 (22.8)	.433 (11.0)	.512 (13.0)
420093B1/4	1.280 (32.5)	.492 (12.5)	.551 (14.0)
420094B1/4	1.512 (38.4)	.531 (13.5)	.630 (16.0)

* indicates solid aluminum knob

42011 SERIES Smooth finish with plastic insert and line indicator on top

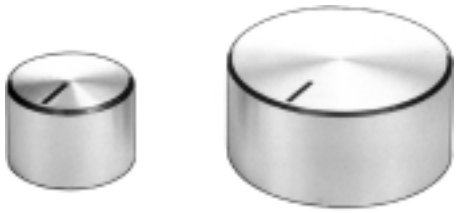

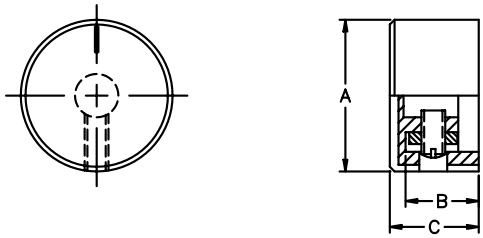

MODEL (Color-natural)	MODEL(Color-black)	A	B	C
420111A1/8	**420111B1/8**	.709 (18.0)	.374 (9.5)	.472 (12.0)
420111A1/4	**420111B1/4**	.709 (18.0)	.374 (9.5)	.472 (12.0)
420112A1/4	**420112B1/4**	.874 (22.2)	.433 (11.0)	.512 (13.0)
420113A1/4	**420113B1/4**	1.255 (31.9)	.492 (12.5)	.551 (14.0)
420114A1/4	**420114B1/4**	1.488 (37.8)	.531 (13.5)	.630 (16.0)

* indicates solid aluminum knob

42012 SERIES Straight knurl with plastic insert and line indicator on top

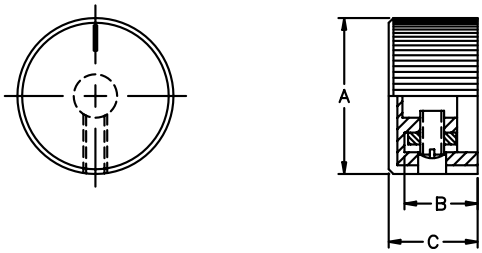

MODEL (Color-natural)	A	B	C
420121A1/8	.732 (18.6)	.374 (9.5)	.472 (12.0)
420121A1/4	.732 (18.6)	.374 (9.5)	.472 (12.0)
420122A1/4	.898 (22.8)	.433 (11.0)	.512 (13.0)
420123A1/4	1.280 (32.5)	.492 (12.5)	.551 (14.0)
420124A1/4	1.512 (38.4)	.531 (13.5)	.630 (16.0)

* indicates solid aluminum knob

SPECIFICATIONS SUBJECT TO CHANGE WITHOUT NOTICE.

U

Notes: Dims. in inches & (millimeters). Shaft size is last 3 digits of Model No.

KB SERIES Solid aluminum with straight knurl and line indicator on top

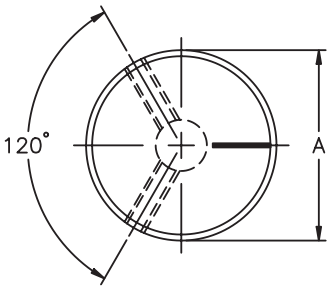

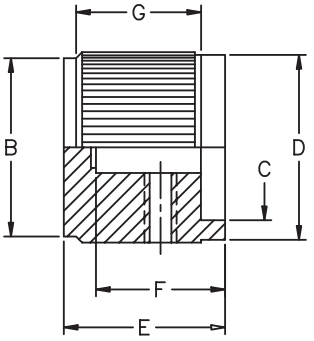

MODEL	COLOR	A	B	C	D	E	F	G
KB500A1/8AL	Natural	.500 (12.7)	.430 (10.9)	.390 (9.90)	.470 (11.9)	.790 (20.0)	.630 (16.0)	.610 (15.5)
KB500A1/4AL	Natural	.500 (12.7)	.430 (10.9)	.390 (9.90)	.470 (11.9)	.790 (20.0)	.630 (16.0)	.610 (15.5)
KB500B1/8AL	Black	.500 (12.7)	.430 (10.9)	.390 (9.90)	.470 (11.9)	.790 (20.0)	.630 (16.0)	.610 (15.5)
KB500B1/4AL	Black	.500 (12.7)	.430 (10.9)	.390 (9.90)	.470 (11.9)	.790 (20.0)	.630 (16.0)	.610 (15.5)
KB700A1/4AL	Natural	.750 (19.0)	.680 (17.3)	.590 (15.0)	.710 (18.0)	.790 (20.0)	.630 (16.0)	.610 (15.5)
KB700B1/4AL	Black	.750 (19.0)	.680 (17.3)	.590 (15.0)	.710 (18.0)	.790 (20.0)	.630 (16.0)	.610 (15.5)
KB900A1/4AL	Natural	.930 (23.6)	.870 (22.1)	.710 (18.0)	.900 (22.9)	.790 (20.0)	.630 (16.0)	.610 (15.5)
KB900B1/4AL	Black	.930 (23.6)	.870 (22.1)	.710 (18.0)	.900 (22.9)	.790 (20.0)	.630 (16.0)	.610 (15.5)
TWO-TONED	BODY-TOP							
KB500AB1/8AL	NTL. & BLK.	.500 (12.7)	.430 (10.9)	.390 (9.90)	.470 (11.9)	.790 (20.0)	.630 (16.0)	.610 (15.5)
KB500AB1/4AL	NTL. & BLK.	.500 (12.7)	.430 (10.9)	.390 (9.90)	.470 (11.9)	.790 (20.0)	.630 (16.0)	.610 (15.5)
KB500BA1/8AL	BLK. & NTL.	.500 (12.7)	.430 (10.9)	.390 (9.90)	.470 (11.9)	.790 (20.0)	.630 (16.0)	.610 (15.5)
KB500BA1/4AL	BLK. & NTL.	.500 (12.7)	.430 (10.9)	.390 (9.90)	.470 (11.9)	.790 (20.0)	.630 (16.0)	.610 (15.5)
KB700AB1/4AL	NTL. & BLK.	.750 (19.0)	.680 (17.3)	.590 (15.0)	.710 (18.0)	.790 (20.0)	.630 (16.0)	.610 (15.5)
KB700BA1/4AL	BLK. & NTL.	.750 (19.0)	.680 (17.3)	.590 (15.0)	.710 (18.0)	.790 (20.0)	.630 (16.0)	.610 (15.5)
KB900AB1/4AL	NTL. & BLK.	.930 (23.6)	.870 (22.1)	.710 (18.0)	.900 (22.9)	.790 (20.0)	.630 (16.0)	.610 (15.5)
KB900BA1/4AL	BLK. & NTL.	.930 (23.6)	.870 (22.1)	.710 (18.0)	.900 (22.9)	.790 (20.0)	.630 (16.0)	.610 (15.5)

KHF SERIES Solid aluminum with smooth finish and sawcut indicator on top and side

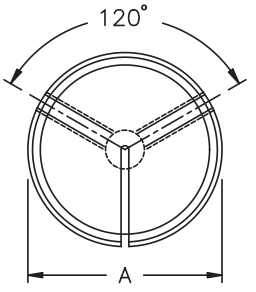

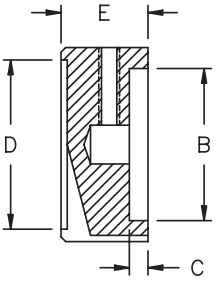

MODEL (Color-natural)	A	B	C	D	E
KHF500A1/4	.500 (12.7)	.380 (9.65)	.120 (3.05)	.340 (8.64)	.560 (14.2)
KHF700A1/4	.750 (19.0)	.590 (14.90)	.120 (3.05)	.580 (14.7)	.560 (14.2)
KHF900A1/4	.940 (23.9)	.710 (18.0)	.120 (3.05)	.780 (19.8)	.560 (14.2)
KHF1250A1/4	1.25 (31.8)	.980 (24.9)	.120 (3.05)	1.09 (27.7)	.560 (14.2)

KN SERIES Solid aluminum with straight knurl and arrowhead indicator on top

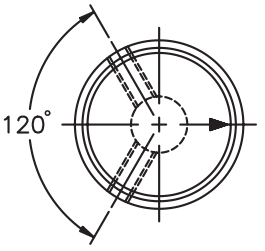

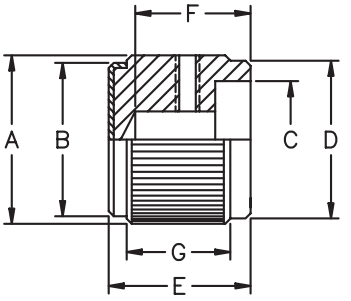

MODEL (Two-toned)	COLOR (Body-top)	A	B	C	D	E	F	G
KN501BA1/8	Blk. & Natural	.500 (12.7)	.450 (11.4)	.380 (9.65)	.450 (11.4)	.630 (16.0)	.510 (13.0)	.460 (11.7)
KN501BA1/4	Blk. & Natural	.500 (12.7)	.450 (11.4)	.380 (9.65)	.450 (11.4)	.630 (16.0)	.510 (13.0)	.460 (11.7)
KN701BA1/8	Blk. & Natural	.750 (19.0)	.680 (17.3)	.590 (15.0)	.700 (17.8)	.630 (16.0)	.510 (13.0)	.460 (11.7)
KN701BA1/4	Blk. & Natural	.750 (19.0)	.680 (17.3)	.590 (15.0)	.700 (17.8)	.630 (16.0)	.510 (13.0)	.460 (11.7)

SPECIFICATIONS SUBJECT TO CHANGE WITHOUT NOTICE.

APEM, 63 Neck Road, HAVERHILL, MA USA 01835-0788 TOLL FREE: (877) 246-7890 FAX: (978) 372-3534 E-mail: info@apem.com

Notes: Dims. in inches & (millimeters). Shaft size is last 3 digits of Model No.

SPECIFICATIONS SUBJECT TO CHANGE WITHOUT NOTICE.

KN SERIES Solid aluminum with straight knurl and line indicator on side

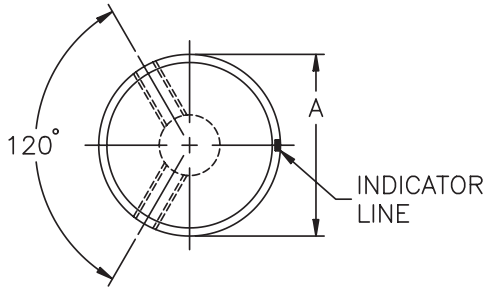

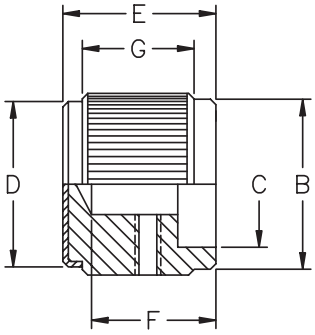

MODEL (Two-toned)	COLOR (Body-top)	A	B	C	D	E	F	G
KN500AB1/8	Natural & Blk.	.500 (12.7)	.450 (11.4)	.380 (9.65)	.450 (11.4)	.630 (16.0)	.510 (13.0)	.460 (11.7)
KN500AB1/4	Natural & Blk.	.500 (12.7)	.450 (11.4)	.380 (9.65)	.450 (11.4)	.630 (16.0)	.510 (13.0)	.460 (11.7)
KN500BA1/8	Blk. & Natural	.500 (12.7)	.450 (11.4)	.380 (9.65)	.450 (11.4)	.630 (16.0)	.510 (13.0)	.460 (11.7)
KN500BA1/4	Blk. & Natural	.500 (12.7)	.450 (11.4)	.380 (9.65)	.450 (11.4)	.630 (16.0)	.510 (13.0)	.460 (11.7)
KN700AB1/4	Natural & Blk.	.750 (19.0)	.700 (17.8)	.590 (14.9)	.700 (17.8)	.630 (16.0)	.510 (13.0)	.460 (11.7)
KN700BA1/4	Blk. & Natural	.750 (19.0)	.700 (17.8)	.590 (14.9)	.700 (17.8)	.630 (16.0)	.510 (13.0)	.460 (11.7)
KN900AB1/4	Natural & Blk.	.940 (23.9)	.880 (22.3)	.710 (18.0)	.800 (22.3)	.630 (16.0)	.510 (13.0)	.460 (11.7)
KN900BA1/4	Blk. & Natural	.940 (23.9)	.880 (22.3)	.710 (18.0)	.800 (22.3)	.630 (16.0)	.510 (13.0)	.460 (11.7)
KN1250AB1/4	Natural & Blk.	1.25 (31.7)	1.20 (30.5)	.980 (24.9)	1.20 (30.5)	.630 (16.0)	.510 (13.0)	.460 (11.7)
KN1250BA1/4	Blk. & Natural	1.25 (31.7)	1.20 (30.5)	.980 (24.9)	1.20 (30.5)	.630 (16.0)	.510 (13.0)	.460 (11.7)

KNS SERIES Solid aluminum with straight knurl and arrowhead indicator on skirt

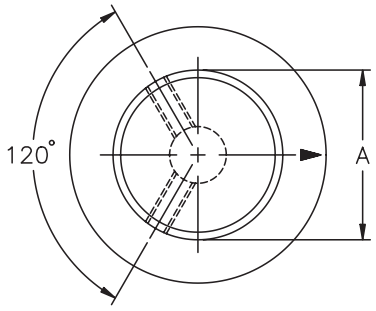

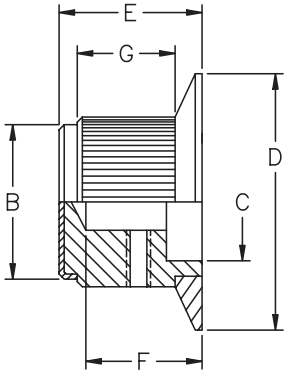

MODEL	COLOR	A	B	C	D	E	F	G
KNS501A1/8	Natural	.500 (12.7)	.450 (11.4)	.380 (9.65)	.750 (19.0)	.630 (16.0)	.510 (13.0)	.430 (10.9)
KNS501A1/4	Natural	.500 (12.7)	.450 (11.4)	.380 (9.65)	.750 (19.0)	.630 (16.0)	.510 (13.0)	.430 (10.9)
KNS501B1/8	Black	.500 (12.7)	.450 (11.4)	.380 (9.65)	.750 (19.0)	.630 (16.0)	.510 (13.0)	.430 (10.9)
KNS501B1/4	Black	.500 (12.7)	.450 (11.4)	.380 (9.65)	.750 (19.0)	.630 (16.0)	.510 (13.0)	.430 (10.9)
KNS701A1/4	Natural	.750 (19.0)	.700 (17.8)	.590 (14.9)	1.13 (28.3)	.630 (16.0)	.510 (13.0)	.430 (10.9)
KNS701B1/4	Black	.750 (19.0)	.700 (17.8)	.590 (14.9)	1.13 (28.3)	.630 (16.0)	.510 (13.0)	.430 (10.9)
TWO-TONED	**BODY-TOP-SKIRT**							
KNS501BA1/8	Blk.& Natural	.500 (12.7)	.450 (11.4)	.380 (9.65)	.750 (19.0)	.630 (16.0)	.510 (13.0)	.430 (10.9)
KNS501BA1/4	Blk.& Natural	.500 (12.7)	.450 (11.4)	.380 (9.65)	.750 (19.0)	.630 (16.0)	.510 (13.0)	.430 (10.9)
KNS701BA1/8	Blk.& Natural	.750 (19.0)	.700 (17.8)	.590 (14.9)	1.13 (28.3)	.630 (16.0)	.510 (13.0)	.430 (10.9)
KNS701BA1/4	Blk.& Natural	.750 (19.0)	.700 (17.8)	.590 (14.9)	1.13 (28.3)	.630 (16.0)	.510 (13.0)	.430 (10.9)

U

Notes: Dims. in inches & (millimeters). Shaft size is last 3 digits of Model No.

KS SERIES Solid aluminum with 3 flute design and line indicator on side and skirt

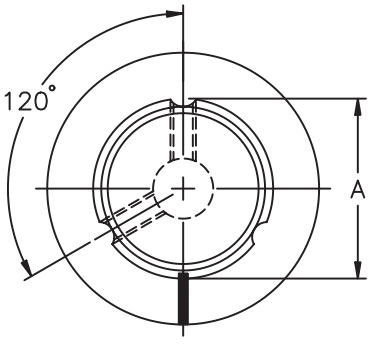

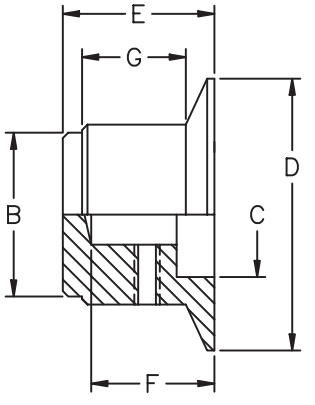

MODEL	COLOR	A	B	C	D	E	F	G
KS500A1/8	Natural	.500 (12.7)	.430 (10.9)	.380 (9.65)	.750 (19.0)	.630 (16.0)	.510 (12.9)	.430 (10.9)
KS500A1/4	Natural	.500 (12.7)	.430 (10.9)	.380 (9.65)	.750 (19.0)	.630 (16.0)	.510 (12.9)	.430 (10.9)
KS500B1/8	Black	.500 (12.7)	.430 (10.9)	.380 (9.65)	.750 (19.0)	.630 (16.0)	.510 (12.9)	.430 (10.9)
KS500B1/4	Black	.500 (12.7)	.430 (10.9)	.380 (9.65)	.750 (19.0)	.630 (16.0)	.510 (12.9)	.430 (10.9)
KS700A1/4	Natural	.750 (19.0)	.650 (16.5)	.590 (14.9)	1.12 (28.4)	.630 (16.0)	.510 (12.9)	.430 (10.9)
KS700B1/4	Black	.750 (19.0)	.650 (16.5)	.590 (14.9)	1.12 (28.4)	.630 (16.0)	.510 (12.9)	.430 (10.9)
KS900A1/4	Natural	.940 (23.9)	.820 (20.8)	.710 (18.0)	1.40 (35.6)	.630 (16.0)	.510 (12.9)	.430 (10.9)
KS900B1/4	Black	.940 (23.9)	.820 (20.8)	.710 (18.0)	1.40 (35.6)	.630 (16.0)	.510 (12.9)	.430 (10.9)

SPECIFICATIONS SUBJECT TO CHANGE WITHOUT NOTICE.

APEM, 63 Neck Road, HAVERHILL, MA USA 01835-0788 TOLL FREE: (877) 246-7890 FAX: (978) 372-3534 E-mail: info@apem.com

Мы молодая и активно развивающаяся компания в области поставок электронных компонентов. Мы поставляем электронные компоненты отечественного и импортного производства напрямую от производителей и с крупнейших складов мира.

Благодаря сотрудничеству с мировыми поставщиками мы осуществляем комплексные и плановые поставки широчайшего спектра электронных компонентов.

Собственная эффективная логистика и склад в обеспечивает надежную поставку продукции в точно указанные сроки по всей России.

Мы осуществляем техническую поддержку нашим клиентам и предпродажную проверку качества продукции. На все поставляемые продукты мы предоставляем гарантию .

Осуществляем поставки продукции под контролем ВП МО РФ на предприятия военно-промышленного комплекса России , а также работаем в рамках 275 ФЗ с открытием отдельных счетов в уполномоченном банке. Система менеджмента качества компании соответствует требованиям ГОСТ ISO 9001.

Минимальные сроки поставки, гибкие цены, неограниченный ассортимент и индивидуальный подход к клиентам являются основой для выстраивания долгосрочного и эффективного сотрудничества с предприятиями радиоэлектронной промышленности, предприятиями ВПК и научно-исследовательскими институтами России.

С нами вы становитесь еще успешнее!

Наши контакты:

Телефон: +7 812 627 14 35

Электронная почта: sales@st-electron.ru

Адрес: 198099, Санкт-Петербург, Промышленная ул, дом № 19, литера Н, помещение 100-Н Офис 331