CONEXANT

Single-Chip Broadcast Audio/Video Decoder

CX25840/1/2/3

Highly Flexible Single-Chip Video and Broadcast Audio Decoding

Conexant's broadband communications portfolio includes a comprehensive suite of semiconductor solutions that enable the digital home and information network. The CX25840/1/2/3 is Conexant's second generation of Audio/Video (A/V) decoders built on the success of the CX23880 family of broadcast A/V PCI decoders. These devices are optimized for the regional broadcast requirements and are pin-to-pin compatible with each other. The CX25840/1/2/3 is the smallest integrated stereo broadcast A/V decoder capable of demodulating all of the most common worldwide A/V standards.

The CX25840 with no DBX and CX25841 with DBX support both the North American (BTSC) and Japanese (EIA-J) markets, respectively. The CX25842 supports the European market. And finally, for the customer who wants a single chip to address all worldwide broadcast standards, there is the CX25843. This device provides highly integrated, single-chip analog, A/V capture solutions ideal for digital video systems that support worldwide broadcast analog A/V content.

Distinguished by its high quality, flexibility, broadcast audio support, integration, and ease of use, the CX25840/1/2/3 can be designed into a wide array of applications, including set-top boxes, flat panel displays, HDTVs, and personal video recorders (PVRs).

Highly Integrated

The CX25840/1/2/3 is highly integrated, and includes anti-aliasing, noise rejection filters, and Automatic Gain Control (AGC) and DC restore circuits. Along with worldwide decoding for all common video and broadcast audio standards, processing functions such as high-quality four-lines adaptive comb filtering, arbitrary horizontal and 5-tap vertical scaling, hue, brightness, saturation, and contrast controls are also included. The audio path includes an automatic volume control function and two assignable stereo processing units for control of volume, three-band equalization, and balance.

The level of audio and video integration provided by the CX25840/1/2/3 removes the need for additional broadcast audio decoding and processing chips or external sound demodulation chips. It also reduces the overall Bill-of-Materials (BOM) for the system developer, without compromising audio and video performance.

Distinguishing Features

- Auto detection and configuration for audio/video
- Worldwide audio standards - BTSC, EIA-J, A2, NICAM, FM/AM
- Baseband audio support via I2S and AC 97
- Two 10 bit A/D
- Component video support
- Integrated anti-alias filter
- 12mm X 12mm 80-TQFP
- 4H adaptive comb
- On-chip voltage regulator

Part Number CX25840/1/2/3
Description Broadcast Audio/Video Decoder

Ease of Use

The CX25840/1/2/3 can automatically detect, via the use of an on-chip microprocessor, all the worldwide broadcast video and audio standards. This automatic detection is particularly important in geographic regions where different audio standards may be received on a channel-by-channel basis. The devices are preconfigured in default mode for development, verification, and fast prototyping and thus require minimal programming for startup.

Flexible Architecture

The CX25840/1/2/3 video inputs can be programmed for up to eight signal inputs - a maximum of eight Composite Video Baseband Signal (CVBS) input channels. Each of these inputs can be used to support CVBS, S-Video, component video, or broadcast audio inputs. The total number and configuration of video and audio inputs is user defined.

With eight programmable input ports and configurable output ports for 4:2:2 digital video and linear PCM audio, the CX25840/1/2/3 can be used to capture video and audio from TV tuners, DVD players, video cameras, VCRs, game consoles, or any other source of composite Y/C or component (480i) video.

Baseband Audio Support

Output flexibility is not limited to video. The CX25840/1/2/3 offers complete support for baseband audio. The audio output can be programmed to support interfaces of I2S, VIP, or audio over ancillary in the 656 video modes. Additionally, the I2S CLK can act as a master or slave.

The serial audio interface supports programmable master/slave modes and 16- to 24-bit sample widths. The serial audio input port can supply audio samples from an external, baseband audio codec at 32 kHz, 44.1 kHz, 48 kHz, and 96 kHz.

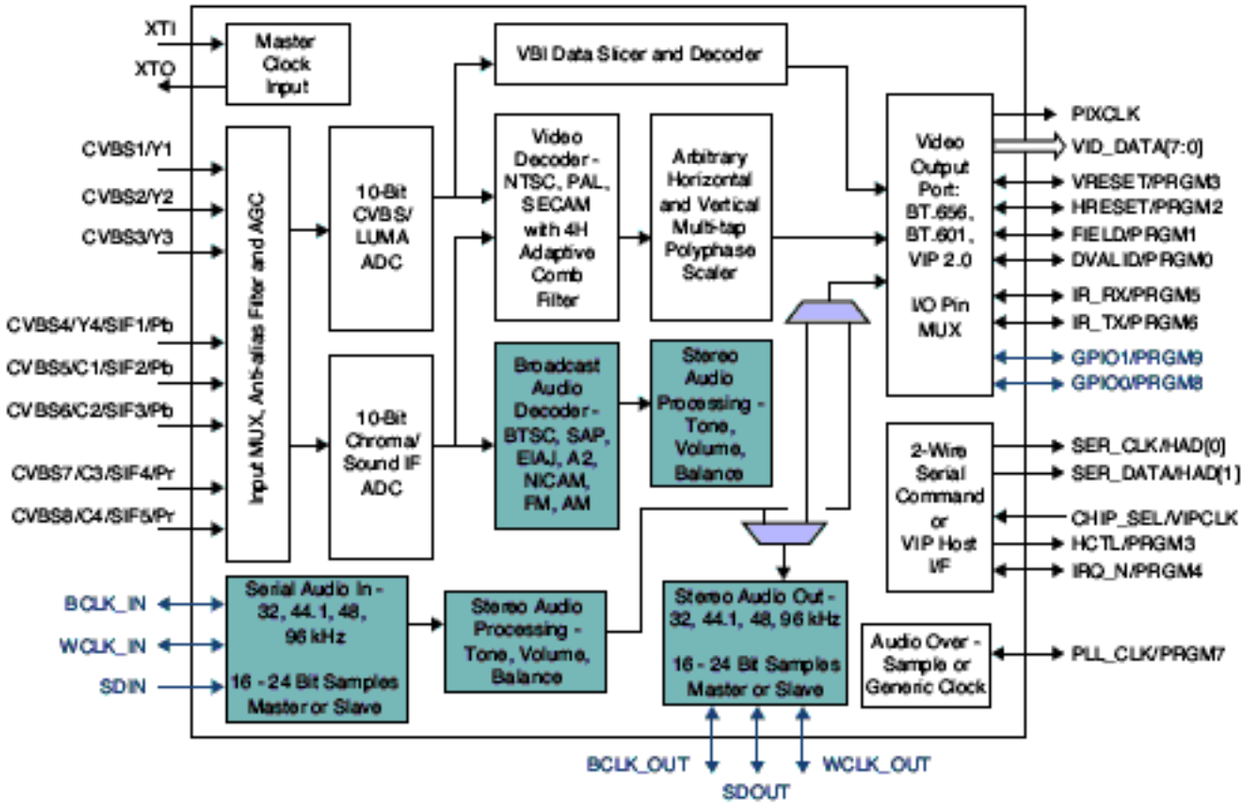

CX25840/1/2/3 System Block Diagram

Part Ordering Numbers

Part Number	Worldwide Audio Decoding	A2, NICAM, FM, AM, Audio Decoding	BTSC (with DBX), EIA-J Audio Decoding	BTSC (without DBX), EIA-J Audio Decoding	Component Video Input	VIP Host Port
CX25840				X	X	X
CX25841			X		X	X
CX25842		X			X	X
CX25843	X				X	X

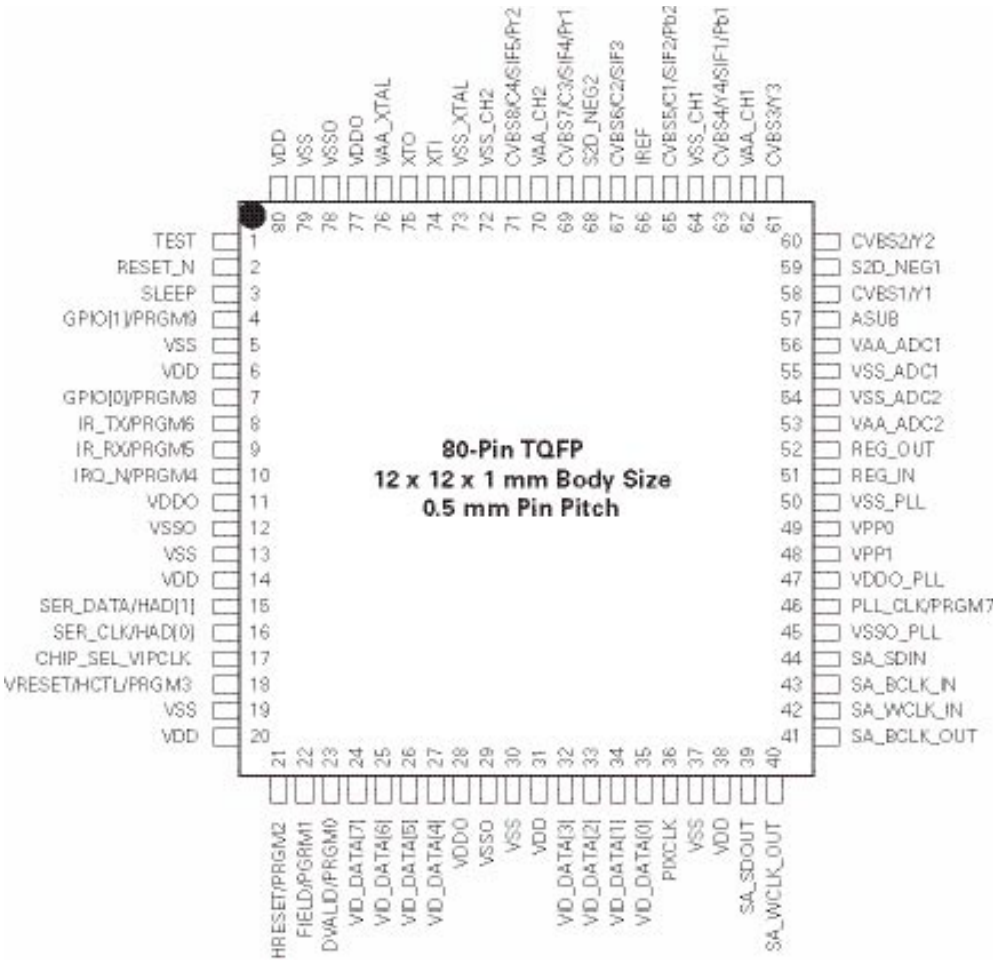

CX25843, CX25842, CX25841, and CX25840 Pinout

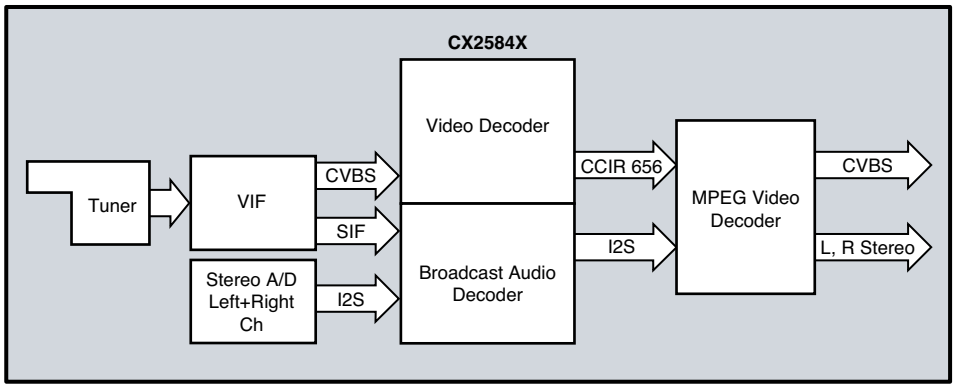

CX25840/1/2/3 Diagram

CX25840/1/2/3 Features

- Auto detection and configuration of worldwide broadcast A/V standards
- Worldwide video standards – NTSC (M, J, 4.43), PAL (B, D, G, H, I, M, N, Nc), SECAM (K, L)
- Worldwide audio standards – BTSC, EIA-J, A2, NICAM, FM/AM
- Full 2 10-Bit ADCs and data path
- Flexible video input mux with integrated anti-alias filtering
- Four line adaptive comb filter for NTSC and PAL
- Flexible video output port - 27 MHz ITU-R BT.656, VIP 2, or ITU-R BT.601 video with separate syncs
- Macrovision detection
- Programmable VBI data slicer for data services such as closed caption, Teletext, and program guides
- Power-up configurable two wire serial command interface or two wire VIP 1.1/2 host port interface
- Multiple audio outputs – serial audio interface I2S or AC97 or embedded as ancillary data in the video stream
- Flexible sample rate conversion on all audio inputs and outputs
- Hardware interrupt to eliminate polling
- Fast locking mode for security camera applications
- Auxiliary clock output – For providing an over sample audio clock locked to the video or for use as a general purpose PLL output
- Infrared transmit and receive logic
- Internal voltage regulation for single supply operation
- Low power
- 80-pin TQFP

Typical Applications

- Flat panel displays
- HDTV
- TV tuners
- DVD players
- Video cameras
- Set-top boxes
- VCRs and PVRs
- Game consoles

© 2003, Conexant Systems, Inc. All Rights Reserved. Conexant and the Conexant logo are registered trademarks of Conexant Systems, Inc. All other trademarks are owned by their respective owners. Although Conexant strives for accuracy in all its publications, this material may contain errors or omissions and is subject to change without notice. **THIS MATERIAL IS PROVIDED AS IS AND WITHOUT ANY EXPRESS OR IMPLIED WARRANTIES, INCLUDING MERCHANTABILITY, FITNESS FOR A PARTICULAR PURPOSE AND NON-INFRINGEMENT.** Conexant shall not be liable for any special, indirect, incidental or consequential damages as a result of its use.

www.conexant.com
General Information:
U.S. and Canada: (888) 855-4562
International: (732) 345-7500
Headquarters
4000 MacArthur Blvd.
Newport Beach, CA 92660

Order# 102205A

CONEXANT

Мы молодая и активно развивающаяся компания в области поставок электронных компонентов. Мы поставляем электронные компоненты отечественного и импортного производства напрямую от производителей и с крупнейших складов мира.

Благодаря сотрудничеству с мировыми поставщиками мы осуществляем комплексные и плановые поставки широчайшего спектра электронных компонентов.

Собственная эффективная логистика и склад в обеспечивает надежную поставку продукции в точно указанные сроки по всей России.

Мы осуществляем техническую поддержку нашим клиентам и предпродажную проверку качества продукции. На все поставляемые продукты мы предоставляем гарантию .

Осуществляем поставки продукции под контролем ВП МО РФ на предприятия военно-промышленного комплекса России , а также работаем в рамках 275 ФЗ с открытием отдельных счетов в уполномоченном банке. Система менеджмента качества компании соответствует требованиям ГОСТ ISO 9001.

Минимальные сроки поставки, гибкие цены, неограниченный ассортимент и индивидуальный подход к клиентам являются основой для выстраивания долгосрочного и эффективного сотрудничества с предприятиями радиоэлектронной промышленности, предприятиями ВПК и научно-исследовательскими институтами России.

С нами вы становитесь еще успешнее!

Наши контакты:

Телефон: +7 812 627 14 35

Электронная почта: sales@st-electron.ru

Адрес: 198099, Санкт-Петербург, Промышленная ул, дом № 19, литера Н, помещение 100-Н Офис 331