A-21-05

For technical assistance call the Sensors/ Controls Products number on the back cover.

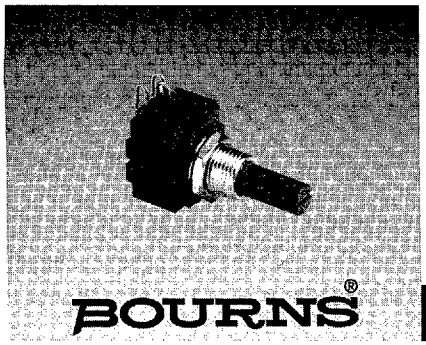

BOURNS®

Features

- Features one-piece molded plastic
- Available in a variety of pin-out shaft and rotor assemblies configurations
- Virtually infinite electrical circuit
- Model 96 sealed for board wash
- Metal shaft available as special feature

91, 93, 95, 96 - 5/8" Square Single-Turn

Initial Electrical Characteristics[1]	Conductive Plastic Element	Cermet Element
Standard Resistance Range		
Linear Tapers (A, B, E, & H)	(B & E) 150 ohms to 1 megohms	(A & H) 50 ohms to 1 megohms
Audio Tapers (C, D, F, G S, & T)	(D,G,S, & T) 1K ohms to 5.0 megohms	(C & F) 1K ohms to 5.0 megohms
Resistance Tolerance	(B,D, & G tapers) ±20% (E, S, & T tapers) ±10%	(A,C, & F tapers) ±10% (H taper) ±5%
Independent Linearity	(B & E tapers) ±5%	(A & H tapers) ±5%
Absolute Minimum Resistance	2 ohms maximum	2 ohms maximum
Continuity	Maintained for full mechanical angle	Maintained for full mechanical angle
Effective Electrical Angle	240° ±5°	240° ±6°
Contact Resistance Variation	±1%	±1% or 3 ohms (whichever is greater)
Dielectric Withstanding Voltage	MIL-STD-202, Method 301	MIL-STD-202, Method 301
Sea Level	1,500 VAC minimum	1,500 VAC minimum
70,000 Feet	500 VAC minimum	500 VAC minimum
Insulation Resistance (500 VDC)	1,000 megohms minimum	1,000 megohms minimum
Power Rating (Voltage Limited By Power Dissipation or 350 VAC, Whichever Is Less)		
+70°C Single Section Assembly	(B & E tapers) 0.5 watt (D,G,S, & T tapers) 0.25 watt	(A & H tapers) 2 watts (C & F tapers) 1 watt
+70°C Multiple Section Assembly	(B & E tapers) 0.5 watt/section (D,G,S, & T tapers) 0.25 watt/section	(A & H tapers) 1 watt/section (C & F tapers) 0.5 watt/section
+125°C	0 watt	0 watt
Roll-on/Roll-off	(B & E tapers) 0.25% maximum (D & S tapers) 0.1% maximum CCW end (G & T tapers) 0.1% maximum CW end (D & S tapers) 0.5% maximum CW end (G & T tapers) 0.5% maximum CCW end	(A & H tapers) 0.5% maximum (C taper) 0.1% maximum CCW end (F taper) 0.1% maximum CW end (C taper) 1.0% maximum CW end (F taper) 1.0% maximum CCW end
Theoretical Resolution	Essentially infinite	Essentially infinite

Environmental Characteristics[1]		
Operating Temperature	+1°C to +125°C	+1°C to +125°C
Storage Temperature Range	-55°C to +125°C	-55°C to +125°C
Temperature Coefficient Over Storage Temperature Range	±1,000PPM/°C	±150PPM/°C
Vibration (Single Section)	15G	15G
Total Resistance Shift	±2% maximum	±2% maximum
Voltage Ratio Shift	±5% maximum	±5% maximum
Shock (Single Section)	30G	30G
Total Resistance Shift	±2% maximum	±2% maximum
Voltage Ratio Shift	±5% maximum	±5% maximum
Load Life	1,000 hours	1,000 hours
Total Resistance Shift	±10% maximum	±5% maximum
Rotational Life (No Load)	100,000 cycles	100,000 cycles
Total Resistance Shift	(B & E tapers) 10 ohms or ±15% maximum (whichever is greater) (D,G,S, & T tapers) ±20% maximum	10 ohms or ±10% maximum (whichever is greater)
Contact Resistance Variation @ 50,000 cycles	(B & E tapers) ±2% (D,G, S, & T tapers) ±3%	
Moisture Resistance	MIL-STD-202, Method 103, Condition B	MIL-STD-202, Method 103, Condition B
Total Resistance Shift	(B & E tapers) ±10% maximum (D,G, S, & T tapers) ±20% maximum	(All tapers) ±5% maximum
Insulation Resistance (500 VDC)	100 megohms minimum	100 megohms minimum

Mechanical Characteristics[1]		
Running Torque		
Single or Dual Section (A ,D & r Bushings)	0.3 to 1.5 oz.-in. (0.21 to 1.06 Ncm)	0.3 to 1.5 oz.-in. (0.21 to 1.06 Ncm)
Single or Dual Section (C & U Bushings)	0.2 to 1.5 oz.-in. (0.14 to 1.06 Ncm)	0.2 to 1.5 oz.-in. (0.14 to 1.06 Ncm)
Starting Torque	0.3 maximum above average running torque	0.3 maximum above average running torque
Torque Variation	0.5 oz.-in. (0.35 Ncm) max. in 45° shaft travel	0.5 oz.-in. (0.35 Ncm) max. in 45° shaft travel
Stop Strength (1/4" D shaft)	4 in.-lb. (45.19 Ncm)	4 in.-lb. (45.19 Ncm)
(1/8" D shaft)	3 in.-lb. (33.89 Ncm)	3 in.-lb. (33.89 Ncm)
Mechanical Angle	300° ±5°	300° ±5°
Weight (Single Section)	7 grams maximum	7 grams maximum
Each Additional Section	4 grams maximum	4 grams maxixmum
Terminals	Printed circuit terminals, J-Hooks or solder lugs	Printed circuit terminals, J-Hooks or solder lugs
Marking	Manufacturer's trademark, date code, resistance, manufacturer's part number	Manufacturer's trademark, date code, resistance, manufacturer's part number

FOR DIMENSIONAL DRAWINGS SEE PAGE 208.

FOR ORDERING INFORMATION SEE PAGE 209.

NOTE: ALL MODEL 90 PERFORMANCE SPECIFICATIONS DO NOT APPLY TO UNITS SUBJECTED TO PRINTED CIRCUIT BOARD CLEANING PROCEDURES, EXCEPT FOR THE SEALED VERSION (MODEL 96).

[1]AT ROOM AMBIENT: +25°C NOMINAL AND 50% RELATIVE HUMIDITY NOMINAL, EXCEPT AS NOTED.

Specifications are subject to change without notice.

D 21F 1556573 0002096 69T

91, 93, 95, 96 Dimensions and Tolerances

BOURNS®

Model 91 PC Pin Terminals, In-Line

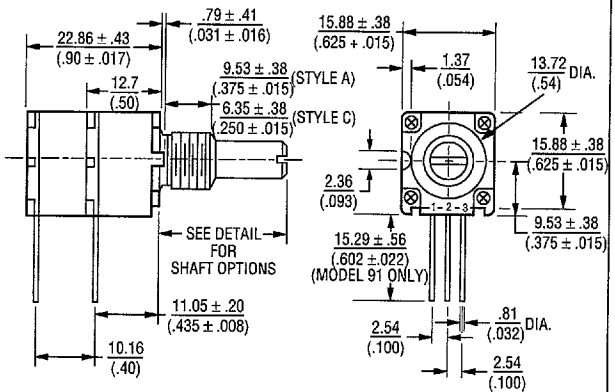

Model 93 PC Pin Terminals, "L" Pattern

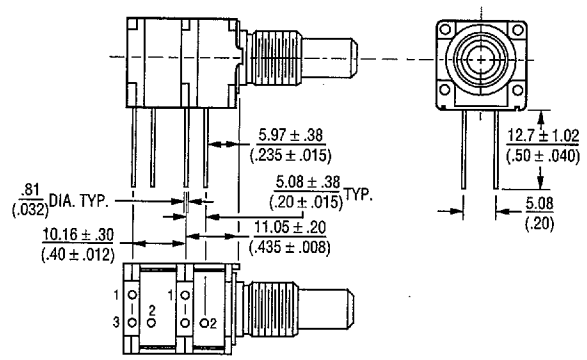

Model 95 Solder Lug Terminals, "Triangular" Pattern

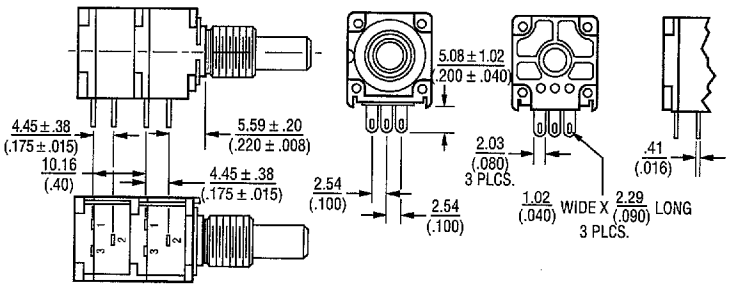

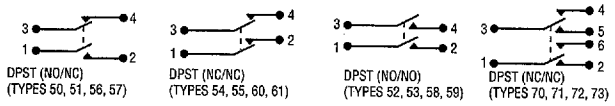

Switch contacts shown in detent position.

Bushing Styles

3/8 THREADLESS (9.53mm) (STYLE "D")
3/8-32 UNEF (9.53mm) (STYLE "A")
1/4-32 UNEF (6.35mm) (STYLE "C")
M10 X 0.75-6g (STYLE "R")
M7 X 0.75-6g (STYLE "U")

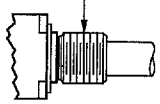

Shaft Styles

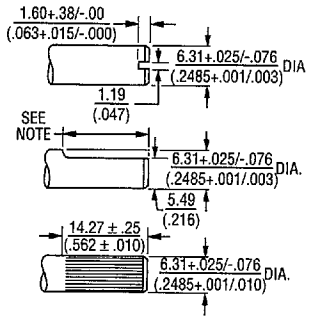

SHAFT TYPE "B"
STD. LENGTHS "L" 12.7 (1/2), 15.88 (5/8), 19.05 (3/4), 22.23 (7/8)
USES BUSHING A OR D

SHAFT TYPE "C"
STD. LENGTHS "L" 19.05 (3/4), 22.0 (7/8)
USES BUSHING A OR D

SHAFT TYPE "W"
STD. LENGTHS "L" 1"
FINGER KNURL, FOR USE WITH BUSHING A OR D

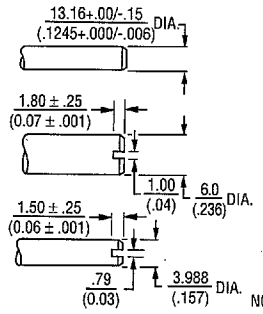

*DIMENSIONS ARE IN MM

SHAFT TYPE "D"
STD. LENGTHS "L" 12.7 (1/2), 15.88 (5/8), 19.05 (3/4) USES BUSHING C

SHAFT TYPE "R"
STD. LENGTHS "L" 16.0 (5/8), 19.05 (3/4), 22.0 (7/8)
USES BUSHING R

SHAFT TYPE "T"
STD. LENGTHS "L" 12.0 (1/2), 16.0 (5/8), 22.0 (7/8)
USES BUSHING U

NOTE: FOR 19.05 (.750) SHAFT - FLAT LENGTH IS 7.95 (.313)
FOR 22.23 (.875) SHAFT - FLAT LENGTH IS 11.18 (.440)

TOLERANCES EXCEPT AS SHOWN: DECIMAL .XXX ± .128 (.015) FRACTION ± 1/64
.XX ± .005 (.38) ANGLE ±5°

DIMENSIONS ARE: METRIC (INCHES)

D 21F 1556573 0002097 526

Specifications are subject to change without notice.

90 Series Panel Controls Dimensions and Tolerances BOURNS®

How To Order

91	A	1	A	B	28	A	15	R51 (Optional)

SWITCH TYPE (MODELS 97, 98 & 99 ONLY)

(R51)	DPST N.O./N.C. CCW Detent In-Line Term

ANTI-ROTATION LUG

A	Single .305" (7.8mm) R, 90°CW
D	No Lug

# SECTIONS		APPLICABLE MODELS
1	Single	Models 91 Thru 96 Only

BUSHING

A	Metal Plain 3/8" (9.53mm) D x 3/8" (9.53mm) L
C	Metal Plain 1/4" (6.35mm) D x 1/4" (6.35mm) L
R	Metal Plain 10mm D x 9mm L
U	Metal Plain 7mm D x 9mm L

SHAFT LENGTH (FMS)		AVAILABLE ONLY IN BUSHING
Code	Description	Code
24	3/4"L	A, C, D
28	7/8"L	A, D
METRIC		
22	22mmL	R, U

ELEMENT TYPE TAPER/TOLERANCE		RESISTANCE CODE VALUE IN OHMS	
MODELS 91 - 99			
(A)	Linear Cermet ±10%	(10) - 1K	(18) - 50K
(B)	Linear C-P ±20%	(13) - 5K	(20) - 100K
(D)	CW Audio C-P ±20%	(15) - 10K	

MODEL

91	Single-Turn, In-Line PC Pins

SHAFT TYPE		AVAILABLE ONLY IN LENGTHS (CODE)	AVAILABLE ONLY IN BUSHINGS (CODE)
B	Single Slotted 1/4" (6.35mm) D	**24, 28**	A, D
D	Single Plain 1/8" (3.18mm) D	**24**	C
R	Single Slotted 6mm D	Metric 16, 22	R
T	Single Slotted 4mm D	Metric 22	U

Recommended part numbers.
For other options contact the factory.
Boldface listings are in stock and readily available through distribution.

Стандарт Электрон Связь

Мы молодая и активно развивающаяся компания в области поставок электронных компонентов. Мы поставляем электронные компоненты отечественного и импортного производства напрямую от производителей и с крупнейших складов мира.

Благодаря сотрудничеству с мировыми поставщиками мы осуществляем комплексные и плановые поставки широчайшего спектра электронных компонентов.

Собственная эффективная логистика и склад в обеспечивает надежную поставку продукции в точно указанные сроки по всей России.

Мы осуществляем техническую поддержку нашим клиентам и предпродажную проверку качества продукции. На все поставляемые продукты мы предоставляем гарантию .

Осуществляем поставки продукции под контролем ВП МО РФ на предприятия военно-промышленного комплекса России , а также работаем в рамках 275 ФЗ с открытием отдельных счетов в уполномоченном банке. Система менеджмента качества компании соответствует требованиям ГОСТ ISO 9001.

Минимальные сроки поставки, гибкие цены, неограниченный ассортимент и индивидуальный подход к клиентам являются основой для выстраивания долгосрочного и эффективного сотрудничества с предприятиями радиоэлектронной промышленности, предприятиями ВПК и научно-исследовательскими институтами России.

С нами вы становитесь еще успешнее!

Наши контакты:

Телефон: +7 812 627 14 35

Электронная почта: sales@st-electron.ru

Адрес: 198099, Санкт-Петербург,
Промышленная ул, дом № 19, литера Н,
помещение 100-Н Офис 331