Not for New Designs

CPC7582

Line Card Access Switch

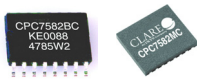

Features

- Small 16-pin SOIC and 16-pin DFN
- DFN package printed-circuit board footprint is 60 percent smaller than the SOIC version, 70 percent smaller than 4th generation EMR solutions.
- Monolithic IC reliability
- Low matched R_{ON}
- Eliminates the need for zero cross switching
- Flexible switch timing to transition from ringing mode to talk mode.
- Clean, bounce-free switching
- Tertiary protection consisting of integrated current limiting, voltage clamping, and thermal shutdown for SLIC protection
- 5 V operation with power consumption < 10 mW
- Intelligent battery monitor
- Latched logic-level inputs, no external drive circuitry required
- SOIC version is pin compatible with Agere product

Applications

- Central office (CO)
- Digital Loop Carrier (DLC)
- PBX Systems
- Digitally Added Main Line (DAML)
- Hybrid Fiber Coax (HFC)
- Fiber in the Loop (FITL)
- Pair Gain System
- Channel Banks

Description

The CPC7582 is a monolithic solid-state switch in a 16-pin SOIC or DFN surface-mount package. It provides the necessary functions to replace two 2-Form-C electro-mechanical relays on traditional analog and integrated voice and data (IVD) line cards found in Central Office, Access, and PBX equipment. The device contains solid state switches for tip and ring line break, ringing injection/ringing return and test access. The CPC7582 requires only a +5V supply and offers break-before-make or make-before-break switch operation using simple logic-level input control.

The CPC7582xC logic states differ from the CPC7582xA/B. See “Functional Description” on page 12 for more information. The CPC7582xC also has a higher trigger and hold current for the protection SCR.

Ordering Information

CPC7582 part numbers are specified as shown here:

B - 16-pin SOIC delivered 50/Tube, 1000/Reel
M - 16-pin DFN delivered 52/Tube, 1000/Reel

CPC7582 x x xx

TR - Add for Tape & Reel Version

A - With Protection SCR
B - Without Protection SCR
C - With Protection SCR with higher trigger and hold currents and “Monitor Test State”

Figure 1. CPC7582 Block Diagram

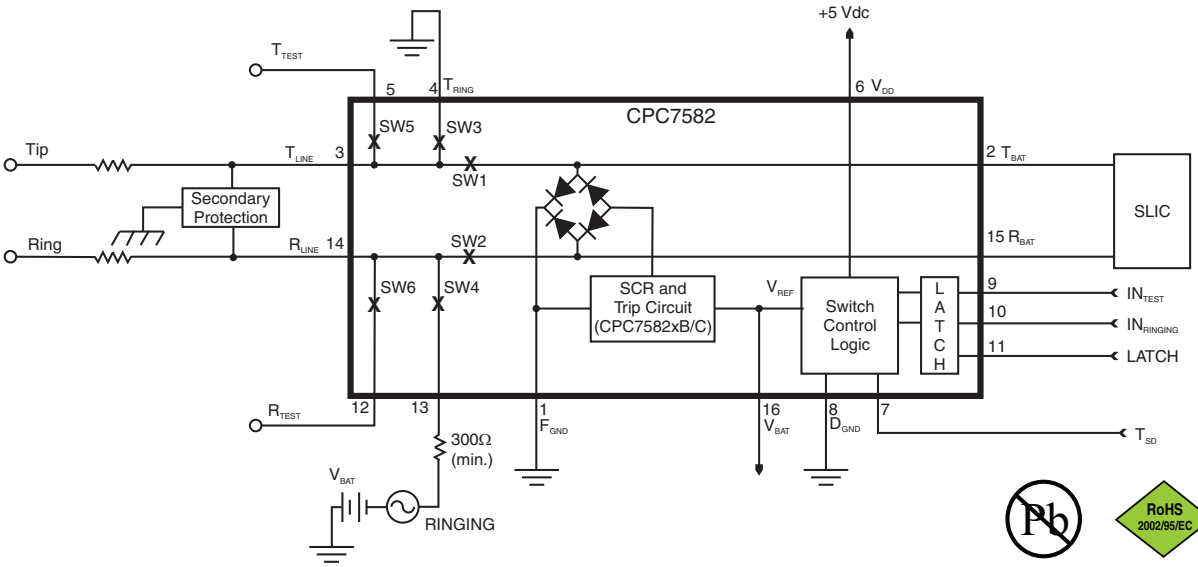

1 Specifications . . . 3
1.1 Package Pinout . . . 3
1.2 Pinout . . . 3
1.3 Absolute Maximum Ratings . . . 4
1.4 ESD Rating . . . 4
1.5 General Conditions . . . 4
1.6 Switch Specifications . . . 5
1.6.1 Break Switches, SW1 and SW2 . . . 5
1.6.2 Ringing Return Switch, SW3 . . . 6
1.6.3 Ringing Switch, SW4 . . . 7
1.6.4 Test Switches, SW5 and SW6 . . . 8
1.7 Additional Electrical Characteristics . . . 9
1.8 Protection Circuitry Electrical Specifications . . . 10
1.9 CPC7582xA/B Truth Table . . . 10
1.10 CPC7582xC Truth Table . . . 11

2 Functional Description . . . 12
2.1 Introduction . . . 12
2.1.1 CPC7582xA/B Logic States . . . 12
2.1.2 CPC7582xC Logic States: . . . 12
2.2 Switch Logic . . . 12
2.2.1 Make-Before-Break Operation - All Versions . . . 13
2.2.2 Make-Before-Break Operation for All Versions (Ringing to Talk Transition) . . . 13
2.2.3 Break-Before-Make Operation - CPC7582xA/B . . . 13
2.2.4 Break-Before-Make Operation CPC7582xA/B (Ringing to Talk Transition) . . . 13
2.2.5 Break-Before-Make Operation - All Versions . . . 13
2.2.6 Break-Before-Make Operation for all Version (Ringing to Talk Transition) . . . 14
2.3 Data Latch . . . 14
2.4 Thermal Shutdown . . . 14
2.5 Ringing Switch Zero-Cross Current Turn Off . . . 14
2.6 Power Supplies . . . 15
2.7 Battery Voltage Monitor . . . 15
2.8 Protection . . . 15
2.8.1 Diode Bridge/SCR . . . 15
2.8.2 Current Limiting function . . . 15
2.9 Temperature Shutdown . . . 15
2.10 External Protection Elements . . . 16

3 Manufacturing Information . . . 17
3.1 Mechanical Dimensions . . . 17
3.1.1 16-Pin SOIC . . . 17
3.1.2 16-Pin DFN . . . 17
3.2 Printed-Circuit Board Land Patterns . . . 18
3.2.1 16-Pin SOIC . . . 18
3.2.2 16-Pin DFN . . . 18
3.3 Tape and Reel Packaging . . . 18
3.3.1 16-Pin SOIC . . . 18
3.3.2 16-Pin DFN . . . 19
3.4 Soldering . . . 19
3.4.1 Moisture Reflow Sensitivity . . . 19
3.4.2 Reflow Profile . . . 19
3.5 Washing . . . 19

1. Specifications

1.1 Package Pinout

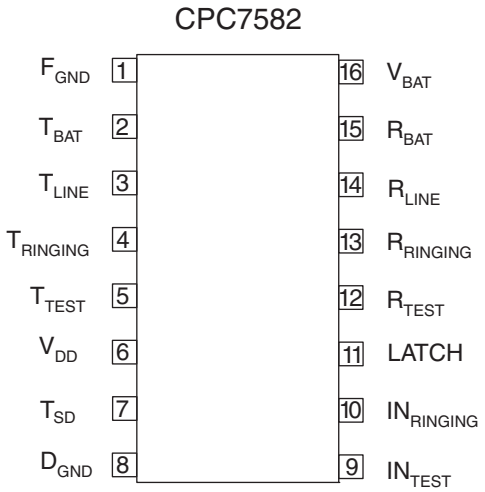

1.2 Pinout

Pin	Name	Description
1	F_{GND}	Fault ground
2	T_{BAT}	Tip lead to the SLIC
3	T_{LINE}	Tip lead of the line side
4	$T_{RINGING}$	Ringing generator return
5	T_{TEST}	Tip lead of the test bus
6	V_{DD}	+5 V supply
7	T_{SD}	Temperature shutdown pin
8	D_{GND}	Digital ground
9	IN_{TEST}	Logic control input
10	$IN_{RINGING}$	Logic control input
11	LATCH	Data latch enable control input
12	R_{TEST}	Ring lead of the test bus
13	$R_{RINGING}$	Ringing generator source
14	R_{LINE}	Ring lead of the line side
15	R_{BAT}	Ring lead to the SLIC
16	V_{BAT}	Battery supply

1.3 Absolute Maximum Ratings

Parameter	Minimum	Maximum	Unit
+5 V power supply (V_{DD})	-0.3	7	V
Battery Supply	-	-85	V
D_{GND} to F_{GND} separation	-5	+5	V
Logic input voltage	-0.3	V_{DD} +0.3	V
Logic input to switch output isolation	-	320	V
Switch open-contact isolation (SW1, SW2, SW3, SW5, SW6)	-	320	V
Switch open-contact isolation (SW4)	-	465	V
Operating relative humidity	5	95	%
Operating temperature	-40	+110	°C
Storage temperature	-40	+150	°C

Absolute maximum electrical ratings are at 25°C.

Absolute maximum ratings are stress ratings. Stresses in excess of these ratings can cause permanent damage to the device. Functional operation of the device at these or any other conditions beyond those indicated in the operational sections of this data sheet is not implied. Exposure of the device to the absolute maximum ratings for an extended period may degrade the device and affect its reliability.

1.4 ESD Rating

ESD Rating (Human Body Model)
1000 V

1.5 General Conditions

Unless otherwise specified, minimum and maximum values are production testing requirements.

Typical values are characteristic of the device at 25°C and are the result of engineering evaluations. They are provided for informational purposes only and are not part of the manufacturing testing requirements.

Specifications cover the operating temperature range T_A = -40°C to +85°C. Also, unless otherwise specified all testing is performed with V_{DD} = +5V_{dc}, logic low input voltage is 0V_{dc} and logic high input voltage is +5V_{dc}.

1.6 Switch Specifications

1.6.1 Break Switches, SW1 and SW2

Parameter	Conditions	Symbol	Minimum	Typical	Maximum	Unit
Off-state leakage current						
+25° C	V_{SW} (differential) = -320 V to GND V_{SW} (differential) = +260 V to -60 V	I_{SW}	-	0.1	1	µA
+85° C	V_{SW} (differential) = -330 V to GND V_{SW} (differential) = +270 V to -60 V			0.3		
-40° C	V_{SW} (differential) = -310 V to GND V_{SW} (differential) = +250 V to -60 V			0.1		
R_{ON}						
+25° C	I_{SW} = ±10 mA, ±40 mA, R_{BAT} and T_{BAT} = -2 V	R_{ON}	-	14.5	-	Ω
+85° C				20.5	28	
-40° C				10.5	-	
R_{ON} match	Per on-resistance test condition of SW1, SW2. Magnitude R_{ON} SW1 - R_{ON}SW2	Δ R_{ON}		0.15	0.8	
DC current limit						
+25° C	V_{SW} (on) = ±10 V	I_{SW}	-	300	-	mA
+85° C			80	160	-	
-40° C			-	400	425	
Dynamic current limit (t ≤ 0.5 µs)	Break switches on, all other switches off, apply ±1 kV 10x1000 µs pulse with appropriate protection in place.		-	2.5	-	A
Logic input to switch output isolation						
+25° C	V_{SW} (T_{LINE}, R_{LINE}) = ±320 V, logic inputs = GND	I_{SW}	-	0.1	1	µA
+85° C	V_{SW} (T_{LINE}, R_{LINE}) = ±330 V, logic inputs = GND			0.3		
-40° C	V_{SW} (T_{LINE}, R_{LINE}) = ±310 V, logic inputs = GND			0.1		
dv/dt sensitivity	-	-		200	-	V/µs

1.6.2 Ringing Return Switch, SW3

Parameter	Conditions	Symbol	Minimum	Typical	Maximum	Unit
Off-state leakage current						
+25° C	V_{SW} (differential) = -320 V to GND V_{SW} (differential) = +260 V to -60 V	I_{SW}	-	0.1	1	µA
+85° C	V_{SW} (differential) = -330 V to GND V_{SW} (differential) = +270 V to -60 V			0.3		
-40° C	V_{SW} (differential) = -310 V to GND V_{SW} (differential) = +250 V to -60 V			0.1		
R_{ON}						
+25° C	I_{SW} (on) = ±0 mA, ±10 mA	R_{ON}	-	60	-	Ω
+85° C				85	100	
-40° C				45	-	
DC current limit						
+25° C	V_{SW} (on) = ±10 V	I_{SW}	-	135	-	mA
+85° C			70	85		
-40° C			-	210		
Dynamic current limit (t ≤ 0.5 µs)	Ringing switches on, all other switches off, apply ±1 kV 10x1000 µs pulse, with appropriate protection in place.			2.5		A
Logic input to switch output isolation						
+25° C	V_{SW} ($T_{RINGING}$, T_{LINE}) = ±320 V, logic inputs = GND	I_{SW}	-	0.1	1	µA
+85° C	V_{SW} ($T_{RINGING}$, T_{LINE}) = ±330 V, logic inputs = GND			0.3		
-40° C	V_{SW} ($T_{RINGING}$, T_{LINE}) = ±310 V, logic inputs = GND			0.1		
dv/dt sensitivity	-	-		200	-	V/µs

1.6.3 Ringing Switch, SW4

Parameter	Conditions	Symbol	Minimum	Typical	Maximum	Unit
Off-state leakage current						
+25° C	V_{SW} (differential) = -255 V to +210 V V_{SW} (differential) = +255 V to -210 V	I_{SW}	-	0.05	1	µA
+85° C	V_{SW} (differential) = -270 V to +210 V V_{SW} (differential) = +270 V to -210 V			0.1		
-40° C	V_{SW} (differential) = -245 V to +210 V V_{SW} (differential) = +245 V to -210 V			0.05		
On Voltage	I_{SW} (on) = ± 1 mA	V_{SW}		1.5	3	V
Ringing generator current to ground	Ringing switches on, inputs set for ringing mode	$I_{RINGING}$		0.1	0.25	mA
On steady-state current*	Inputs set for ringing mode	I_{SW}		-	150	mA
Surge current*	Ringing switches on, all other switches off, apply ±1 kV 10 x 1000 µs pulse, with appropriate protection in place.	-		-	2	A
Release current	-	$I_{RINGING}$		300	-	µA
R_{ON}	I_{SW} (on) = ±70 mA, ±80 mA	R_{ON}		10	15	Ω
Logic input to switch output isolation						
+25° C	V_{SW} ($R_{RINGING}$, R_{LINE}) = ±320 V, logic inputs = gnd	I_{SW}	-	0.1	1	µA
+85° C	V_{SW} ($R_{RINGING}$, R_{LINE}) = ±330 V, logic inputs = gnd			0.3		
-40° C	V_{SW} ($R_{RINGING}$, R_{LINE}) = ±310 V, logic inputs = gnd			0.1		
dv/dt sensitivity	-	-		200	-	V/µs

**Secondary protection and ringing source current limiting must prevent exceeding this parameter.*

1.6.4 Test Switches, SW5 and SW6

Parameter	Conditions	Symbol	Minimum	Typical	Maximum	Unit
Off-state leakage current						
+25° C	V_{SW} (differential) = -320 V to GND V_{SW} (differential) = +260 V to -60 V	I_{SW}	-	0.1	1	µA
+85° C	V_{SW} (differential) = -330 V to GND V_{SW} (differential) = +270 V to -60 V			0.3		
-40° C	V_{SW} (differential) = -310 V to GND V_{SW} (differential) = +250 V to -60 V			0.1		
R_{ON}						
+25° C	$I_{SW(ON)}$ = ±10 mA, ±40 mA, T_{BAT} = -2 V	R_{ON}	-	38	-	Ω
+85° C				46	70	
-40° C				28	-	
DC current limit						
+25° C	V_{SW} (on) = ±10 V	I_{SW}	-	175	-	mA
+85° C			80	110	-	
-40° C			-	210	250	
Dynamic current limit (t ≤ 0.5 µs)	Test switches on, all other switches off, apply ±1 kV at 10x1000 µs pulse, with appropriate protection in place.		-	2.5	-	A
Logic input to switch output isolation						
+25° C	V_{SW} (T_{TEST}, T_{LINE}) = ±320 V, logic inputs = gnd	I_{SW}	-	0.1	1	µA
+85° C	V_{SW} (T_{TEST}, T_{LINE}) = ±330 V, logic inputs = gnd			0.3		
-40° C	V_{SW} (T_{TEST}, T_{LINE}) = ±310 V, logic inputs = gnd			0.1		

1.7 Additional Electrical Characteristics

Parameter	Conditions	Symbol	Minimum	Typical	Maximum	Unit
Digital input characteristics						
Input low voltage	-	V_{IL}	-	-	1.5	V
Input high voltage	-	V_{IH}	3.5	-	-	
Input leakage current (high)	V_{DD} = 5.5 V, V_{BAT} = -75 V, V_{IH} = 5 V	I_{IH}	-	0.1	1	µA
Input leakage current (low)	V_{DD} = 5.5 V, V_{BAT} = -75 V, V_{IL} = 0 V	I_{IL}	-	0.1	1	
Voltage Requirements						
V_{DD}	-	V_{DD}	4.5	5.0	5.5	V
V_{BAT}[1]	-	V_{BAT}	-19	-48	-72	V
[1] V_{BAT} is used only for internal protection circuitry. If V_{BAT} goes more positive than -10 V, the device will enter the all-off state and will remain in the all-off state until the battery goes more negative than -15 V						
Power requirements						
Power consumption in talk and all-off states	V_{DD} = 5 V, V_{BAT} = -48 V, measure I_{DD} and I_{BAT}	P	-	5.5	10	mW
Power consumption in all other states				6.5	10	
V_{DD} current in talk and all-off states	V_{DD} = 5 V, V_{BAT} = -48 V	I_{DD}	-	1.1	2.0	mA
V_{DD} current in all other states		I_{DD}	-	1.3	2.0	
V_{BAT} current in any state	V_{DD} = 5 V, V_{BAT} = -48 V	I_{BAT}	-	0.1	10	µA
Temperature Shutdown Requirements (temperature shutdown flag is active low)						
Shutdown activation temperature	Not production tested - limits are guaranteed by design and Quality Control sampling audits.	T_{TSD_on}	110	125	150	°C
Shutdown circuit hysteresis		T_{TSD_off}	10	-	25	°C

1.8 Protection Circuitry Electrical Specifications

Parameter	Conditions	Symbol	Minimum	Typical	Maximum	Unit
Parameters Related to the Diodes in the Diode Bridge						
Voltage drop at continuous current (50/60 Hz)	Apply ± dc current limit of break switches	Forward Voltage	-	2.1	3	V
Voltage drop at surge current	Apply ± dynamic current limit of break switches	Forward Voltage	-	5	-	
Parameters Related to the Protection SCR						
Surge current	-	-	-	-	*	A
Trigger current	T=+25°C	I_{TRIG}	-	60 (CPC7582xA, xB) 70 (CPC7582xC)	-	mA
	T=+85°C		-	35 (CPC7582xA, xB) 40 (CPC7582xC)	-	
Hold current	T=+25°C	I_{HOLD}	-	100 (CPC7582xA, xB) 135 (CPC7582xC)	-	
	T=+85°C		60 (CPC7582xA, xB) 110 (CPC7582xC)	70 (CPC7582xA, xB) 115 (CPC7582xC)	-	
Gate trigger voltage	$I_{GATE} = I_{TRIGGER}$**	V_{TBAT} or V_{RBAT}	V_{BAT} -4	-	V_{BAT} -2	V
Reverse leakage current	V_{BAT} = -48 V	I_{VBAT}	-	-	1.0	µA
On-state voltage	0.5 A, t = 0.5 µs	V_{TBAT} or V_{RBAT}	-	-3	-	V
	2.0 A, t = 0.5 µs	V_{TBAT} or V_{RBAT}	-	-5	-	V

*Passes GR1089 and ITU-T K.20 with appropriate secondary protection in place.
**V_{BAT} must be capable of sourcing $I_{TRIGGER}$ for the internal SCR to activate.

1.9 CPC7582xA/B Truth Table

State	$IN_{RINGING}$	IN_{TEST}	LATCH	T_{SD}	Break Switches	Ringing Switches	Test Switches
Talk	0	0	0	1 or Floating[1]	On	Off	Off
Test	0	1			Off	Off	On
Ringing	1	0			Off	On	Off
All Off	1	1			Off	Off	Off
Latched	X	X	1		Unchanged		
All off	X	X	X	0[2]	Off	Off	Off

[1]If T_{SD} is tied high, thermal shutdown is disabled. If T_{SD} is left floating, the thermal shutdown mechanism functions normally.
[2]Forcing T_{SD} to ground overrides the logic input pins and forces an all off state.

1.10 CPC7582xC Truth Table

State	$IN_{RINGING}$	IN_{TEST}	LATCH	T_{SD}	Break Switches	Ringing Switches	Test Switches
Talk	0	0	0	1 or Floating[1]	On	Off	Off
Test/Monitor	0	1			On	Off	On
Ringing	1	0			Off	On	Off
Ringing Test	1	1			Off	On	On
Latched	X	X	1		Unchanged		
All off	X	X	X	0[2]	Off	Off	Off

[1]If T_{SD} is tied high, thermal shutdown is disabled. If T_{SD} is left floating, the thermal shutdown mechanism functions normally.

[2]Forcing T_{SD} to ground overrides the logic input pins and forces an all off state.

2. Functional Description

2.1 Introduction

2.1.1 CPC7582xA/B Logic States

- **Talk**. Break switches SW1 and SW2 closed, ringing switches SW3 and SW4 open, and test switches SW5 and SW6 open.
- **Ringing**. Break switches SW1 and SW2 open, ringing switches SW3 and SW4 closed, and test switches SW5 and SW6 open.
- **Test**. Break switches SW1 and SW2 open, ringing switches SW3 and SW4 open, and loop test switches SW5 and SW6 closed.
- **All off**. Break switches SW1 and SW2 open, ringing switches SW3 and SW4 open, and test switches SW5 and SW6 open.

2.1.2 CPC7582xC Logic States:

- **Talk**. Break switches SW1 and SW2 closed, ringing switches SW3 and SW4 open, and test switches SW5 and SW6 open.
- **Ringing**. Break switches SW1 and SW2 open, ringing switches SW3 and SW4 closed, and test switches SW5 and SW6 open.
- **Test/Monitor**. Break switches SW1 and SW2 closed, ringing switches SW3 and SW4 open, and test switches SW5 and SW6 closed.
- **Ringing Test**. Break switches SW1 and SW2 open, ringing switches SW3 and SW4 closed, and test switches SW5 and SW6 closed.
- **All off**. Break switches SW1 and SW2 open, ringing switches SW3 and SW4 open, and test switches SW5 and SW6 open.

The CPC7582 offers break-before-make and make-before-break switching from the ringing state to the talk state with simple logic-level input control. Solid-state switch construction means no impulse noise is generated when switching during ring cadence or ring trip, eliminating the need for external zero-cross switching circuitry. State control is via logic-level input so no additional driver circuitry is required. The linear break switches SW1 and SW2 have exceptionally low R_{ON} and excellent matching characteristics. The ringing switch SW4 has a minimum open contact breakdown voltage of 480 V. This is sufficiently high, with proper protection, to prevent breakdown in the presence of a transient fault condition (i.e., passing the transient on to the ringing generator).

Integrated into the CPC7582 is an over voltage clamping circuit, active current limiting, and a thermal shutdown mechanism to provide protection to the SLIC device during a fault condition. Positive and negative surges are reduced by the current limiting circuitry and hazardous potentials are diverted to ground via diodes and, in xA/C parts, an integrated SCR. Power-cross potentials are also reduced by the current limiting and thermal shutdown circuits.

To protect the CPC7582 from an overvoltage fault condition, use of a secondary protector is required. The secondary protector must limit the voltage seen at the tip and ring terminals to a level below the maximum breakdown voltage of the switches. To minimize the stress on the solid-state contacts, use of a foldback or crowbar type secondary protector is recommended. With proper selection of the secondary protector, a line card using the CPC7582BC will meet all relevant ITU, LSSGR, TIA/EIA and IEC protection requirements.

The CPC7582 operates from a +5 V supply only. This gives the device extremely low idle and active power consumption and allows use with virtually any range of battery voltage. Battery voltage is also used by the CPC7582 as a reference for the integrated protection circuit. In the event of a loss of battery voltage, the CPC7582 enters the all-off state.

2.2 Switch Logic

The CPC7582 provides, when switching from the ringing state to the talk state, the ability to control the release timing of the ringing switches SW3 and SW4 relative to the state of the break switches SW1 and SW2 using simple logic-level inputs. This is referred to as make-before-break or break-before-make operation. When the break switch contacts (SW1 and SW2) are closed (or made) before the ringing switch contacts (SW3 and SW4) are opened (or broken), this is referred to as make-before-break operation. Break-before-make operation occurs when the ringing contacts (SW3 and SW4) are opened (broken) before the break switch contacts (SW1 and SW2) are closed (made). With the CPC7582, the make-before-break and break-before-make operations can easily be selected by applying logic-level inputs to the device.

The logic sequences for these modes of operation are given in “Make-Before-Break Operation for All Versions (Ringing to Talk Transition)” on page 13, “Break-Before-Make Operation CPC7582xA/B (Ringing to Talk Transition)” on page 13, and “Break-Before-Make Operation for all Version (Ringing to Talk Transition)” on page 14. Logic states and input control settings are given in “CPC7582xA/B Truth

Table" on page 10 and "CPC7582xC Truth Table" on page 11.

2.2.1 Make-Before-Break Operation - All Versions

To use make-before-break operation, change the logic inputs to the talk state immediately following the ringing state. Application of the talk state opens the ringing return switch (SW3) as the break switches (SW1 and SW2) close. The ringing switch (SW4) remains closed until the next zero-crossing of the ringing supply current. While in the make-before-break state, ringing potentials in excess of the CPC7582 protection circuitry trigger levels will be diverted to ground.

2.2.2 Make-Before-Break Operation for All Versions (Ringing to Talk Transition)

State	$IN_{RINGING}$	IN_{TEST}	LATCH	T_{SD}	Timing	Break Switches	Ringing Return Switch (SW3)	Ringing Switch (SW4)	Test Switches
Ringing	1	0	0	Floating	-	Off	On	On	Off
Make-before-break	0	0			SW4 waiting for next zero-current crossing to turn off. Maximum time is one-half of the ringing cycle. In this transition state, current that is limited to the dc break switch current limit value will be sourced from the ring node of the SLIC.	On	Off	On	Off
Talk	0	0			Zero-cross current has occurred	On	Off	Off	Off

2.2.3 Break-Before-Make Operation - CPC7582xA/B

Break-before-make operation of the CPC7582xA/B can be achieved using two different techniques.

The first method uses manipulation of the $IN_{RINGING}$ and IN_{TEST} logic inputs as shown in "Break-Before-Make Operation CPC7582xA/B (Ringing to Talk Transition)" on page 13.

1. At the end of the ringing state apply the all off state (0, 0). This releases the ringing return switch (SW3) while the ringing switch remains on, waiting for the next zero current event.
2. Hold the all off state for at least one-half of a ringing cycle to assure that a zero crossing event occurs and that the ringing switch (SW4) has opened.

Break-before-make operation occurs when the ringing switch opens before the break switches (SW1 and SW2) close.

2.2.4 Break-Before-Make Operation CPC7582xA/B (Ringing to Talk Transition)

State	$IN_{RINGING}$	IN_{TEST}	LATCH	T_{SD}	Timing	Break Switches	Ringing Return Switch (SW3)	Ringing Switch (SW4)	Test Switches
Ringing	1	0	0	Floating	-	Off	On	On	Off
All-Off	1	1			Hold this state for at least one-half of the ringing cycle. SW4 waiting for zero current to turn off.	Off	Off	On	Off
Break-Before-Make	1	1			SW4 has opened	Off	Off	Off	Off
Talk	0	0			Close Break Switches	On	Off	Off	Off

2.2.5 Break-Before-Make Operation - All Versions

The second break-before-make method for the CPC7582xA/B is also the only method available for the CPC7582xC. As shown in "CPC7582xA/B Truth Table" on page 10 and "CPC7582xC Truth Table" on page 11, the bidirectional T_{SD} interface disables all of

the CPC7582 switches when pulled to a logic low. Although logically disabled, if the ringing switch (SW4) is active (closed), it will remain closed until the next current zero crossing event.

As shown in the table "Break-Before-Make Operation for all Version (Ringing to Talk Transition)" on page 14, this operation is similar to the one shown in "Break-Before-Make Operation - All Versions" on page 13, except in the method used to select the all off state, and in when the $IN_{RINGING}$ and IN_{TEST} inputs are reconfigured for the talk state.

1. Pull T_{SD} to a logic low to end the ringing state. This opens the ringing return switch (SW3) and prevents any other switches from closing.
2. Keep T_{SD} low for at least one-half the duration of the ringing cycle period to allow sufficient time for a zero crossing current event to occur and for the circuit to enter the break before make state.
3. During the T_{SD} low period, set the $IN_{RINGING}$ and IN_{TEST} inputs to the talk state (0, 0).
4. Release T_{SD}, allowing the internal pull-up to activate the break switches.

When using T_{SD} as an input, the two recommended states are 0 (overrides logic input pins and forces an all off state) and float (allows switch control via logic input pins and the thermal shutdown mechanism is active). This requires the use of an open-collector type buffer.

Forcing T_{SD} to a logic high disables the thermal shutdown circuit and is therefore not recommended as this could lead to device damage or destruction in the presence of excessive tip or ring potentials.

2.2.6 Break-Before-Make Operation for all Version (Ringing to Talk Transition)

State	$IN_{RINGING}$	IN_{TEST}	LATCH	T_{SD}	Timing	Break Switches	Ringing Return Switch (SW3)	Ringing Switch (SW4)	Test Switches
Ringing	1	0	0	Floating	-	Off	On	On	Off
All-Off	0	0		0	Hold this state for at least one-half of the ringing cycle. SW4 waiting for zero current to turn off.	Off	Off	On	Off
Break-Before-Make	0	0			SW4 has opened	Off	Off	Off	Off
Talk	0	0		Floating	Close Break Switches	On	Off	Off	Off

2.3 Data Latch

The CPC7582 has an integrated data latch. The latch operation is controlled by logic-level input pin 11 (LATCH). The data input of the latch is pin 10 ($IN_{RINGING}$) and pin 9 (IN_{TEST}) of the device while the output of the data latch is an internal node used for state control. When LATCH control pin is at logic 0, the data latch is transparent and data control signals flow directly through to state control. A change in input will be reflected in the switch state. When LATCH control pin is at logic 1, the data latch is active and a change in input control will not affect switch state. The switches will remain in the position they were in when the LATCH changed from logic 0 to logic 1 and will not respond to changes in input as long as the latch is at logic 1. The T_{SD} input is not tied to the data latch. Therefore, T_{SD} is not affected by the LATCH input and the T_{SD} input will override state control.

2.4 Thermal Shutdown

Setting T_{SD} to +5 V allows switch control using the logic inputs. This setting, however, also disables the thermal shutdown circuit and is therefore not recommended. When using logic controls via the input pins, pin 7 (T_{SD}) should be allowed to float. As a result, the two recommended states when using pin 7 (T_{SD}) as a control are 0, which forces the device to the all-off state, or float, which allows logic inputs to remain active. This requires the use of an open-collector type buffer.

2.5 Ringing Switch Zero-Cross Current Turn Off

After the application of a logic input to turn SW4 off, the ringing switch is designed to delay the change in state until the next zero-crossing. Once on, the switch requires a zero-current cross to turn off, and therefore should not be used to switch a pure DC signal. The

switch will remain in the on state no matter the logic input until the next zero crossing. These switching characteristics will reduce and possibly eliminate overall system impulse noise normally associated with ringing switches. See application note AN-144, **Impulse Noise Benefits of Line Card Access Switches**. The attributes of ringing switch SW4 may make it possible to eliminate the need for a zero-cross switching scheme. A minimum impedance of 300 Ω in series with the ringing generator is recommended.

2.6 Power Supplies

Both a +5 V supply and battery voltage are connected to the CPC7582. CPC7582 switch state control is powered exclusively by the +5 V supply. As a result, the CPC7582BC exhibits extremely low power dissipation during both active and idle states.

The battery voltage is not used for switch control but rather as a supply for the integrated secondary protection circuitry. The integrated SCR is designed to trigger when pin 2 (T_{BAT}) or pin 15 (R_{BAT}) drops 2 to 4 V below the voltage on pin 16 (V_{BAT}). This trigger prevents a fault induced overvoltage event at the T_{BAT} or R_{BAT} nodes.

2.7 Battery Voltage Monitor

The CPC7582 also uses the V_{BAT} voltage to monitor battery voltage. If battery voltage is lost, the CPC7582 immediately enters the all-off state. It remains in this state until the battery voltage is restored. The device also enters the all-off state if the system battery voltage goes more positive than –10 V, and remains in the all-off state until the battery voltage goes more negative than –15 V. This battery monitor feature draws a small current from the battery (less than 1 μA typical) and will add slightly to the device's overall power dissipation.

2.8 Protection

2.8.1 Diode Bridge/SCR

The CPC7582 uses a combination of current limited break switches, a diode bridge/SCR clamping circuit, and a thermal shutdown mechanism to protect the SLIC device or other associated circuitry from damage during line transient events such as lightning. During a positive transient condition, the fault current is conducted through the diode bridge to ground via F_{GND}. Voltage is clamped to a diode drop above ground. During a negative transient of 2 to 4 V more negative than the voltage at V_{BAT}, the SCR conducts and faults are shunted to F_{GND} via the SCR or the diode bridge.

In order for the SCR to crowbar or foldback, the on voltage (see "Protection Circuitry Electrical Specifications" on page 10) of the SCR must be less negative than the V_{BAT} voltage. If the V_{BAT} voltage is less negative than the SCR on voltage or if the V_{BAT} supply is unable to source the trigger current, the SCR will not crowbar.

For power induction or power-cross fault conditions, the positive cycle of the transient is clamped to the diode drop above ground and the fault current directed to ground. The negative cycle of the transient will cause the SCR to conduct when the voltage exceeds the V_{BAT} voltage by two to four volts, steering the current to ground.

2.8.2 Current Limiting function

If a lightning strike transient occurs when the device is in the talk state, the current is passed along the line to the integrated protection circuitry and limited by the dynamic current limit response of the active switches during the talk state. During the talk state, when a 1000V 10x1000 μs pulse (GR-1089-CORE lightning) is applied to the line though a properly clamped external protector, the current seen at pins 2 (T_{BAT}) and pin 15 (R_{BAT}) will be a pulse with a typical magnitude of 2.5 A and a duration of less than 0.5 μs.

If a power-cross fault occurs with the device in the talk state, the current is passed though break switches SW1 and SW2 on to the integrated protection circuit and is limited by the dynamic DC current limit response of the two break switches. The DC current limit, specified over temperature, is between 80 mA and 425 mA, and the circuitry has a negative temperature coefficient. As a result, if the device is subjected to extended heating due to a power cross fault, the limited current measured at pin 3 (T_{LINE}) and pin 14 (R_{LINE}) will decrease as the device temperature increases. If the device temperature rises sufficiently, the temperature shutdown mechanism will activate and the device will enter the all-off state.

2.9 Temperature Shutdown

The thermal shutdown mechanism will activate when the device temperature reaches a minimum of 110° C, placing the device in the all-off state regardless of logic input. During thermal shutdown mode, pin 7 (T_{SD}) will read 0 V. Normal output of T_{SD} is $+V_{DD}$.

If presented with a short duration transient such as a lightning event, the thermal shutdown feature will typically not activate. But in an extended power-cross transient, the device temperature will rise and the thermal shutdown will activate forcing the switches to the all-off state. At this point the current measured at pin 3 (T_{LINE}) and pin 14 (R_{LINE}) through the break switches will drop to zero. Once the device enters thermal shutdown it will remain in the all-off state until the temperature of the device drops below the de-activation level of the thermal shutdown circuit. This will permit the device to return to normal operation. If the transient has not passed, current will flow at the value allowed by the dynamic DC current limiting of the switches and heating will begin again, reactivating the thermal shutdown mechanism. This cycle of entering and exiting the thermal shutdown mode will continue as long as the fault condition persists. If the magnitude of the fault condition is great enough, the external secondary protector could activate and shunt all current to ground.

The thermal shutdown mechanism of the CPC7582 can be disabled by applying a logic high to pin 7 (T_{SD}).

2.10 External Protection Elements

The CPC7582 requires only overvoltage secondary protection on the loop side of the device. The integrated protection feature described above negates the need for protection on the line side. The secondary protector limits voltage transients to levels that do not exceed the breakdown voltage or input-output isolation barrier of the CPC7582. A foldback or crowbar type protector is recommended to minimize stresses on the device.

Consult Clare's application note, AN-100, "Designing Surge and Power Fault Protection Circuits for Solid State Subscriber Line Interfaces" for equations related to the specifications of external secondary protectors, fused resistors and PTCs.

3. Manufacturing Information

3.1 Mechanical Dimensions

3.1.1 16-Pin SOIC

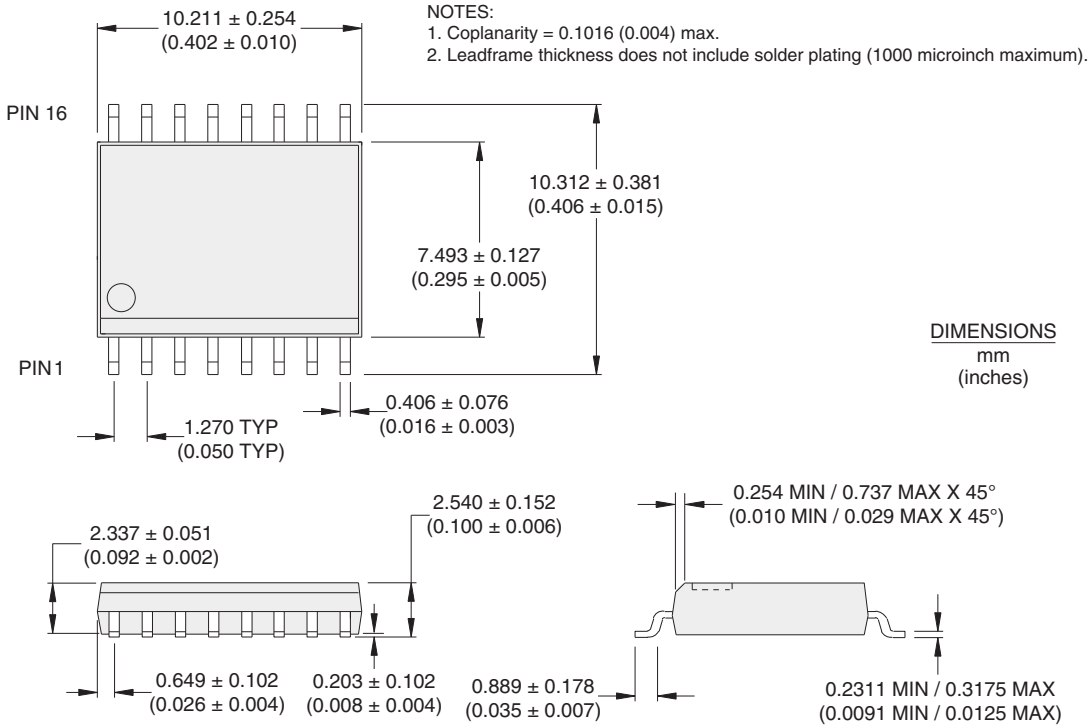

3.1.2 16-Pin DFN

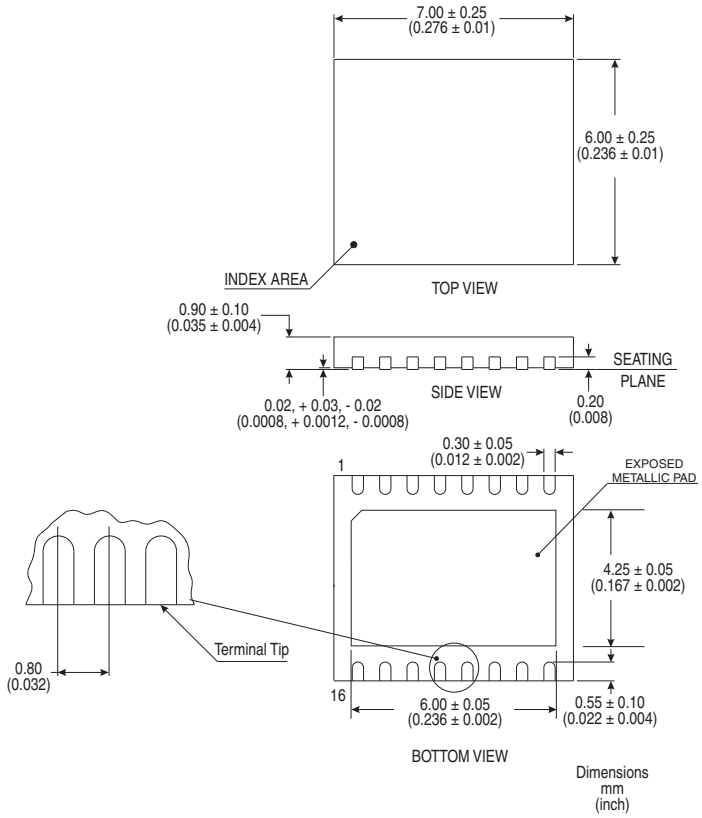

3.2 Printed-Circuit Board Land Patterns

3.2.1 16-Pin SOIC

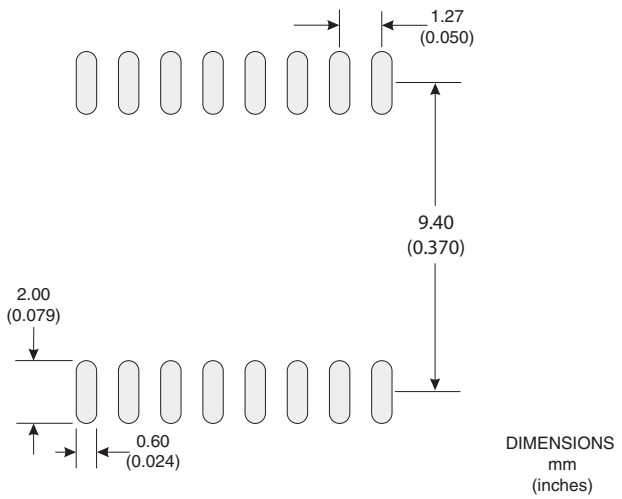

3.2.2 16-Pin DFN

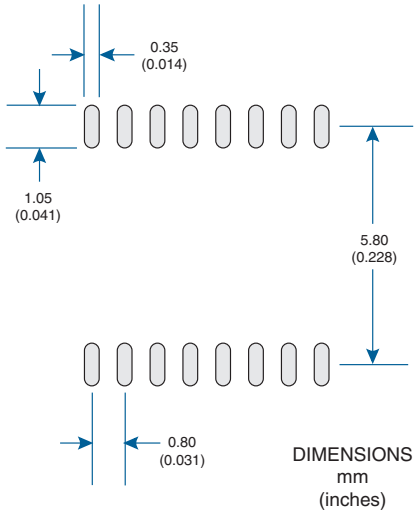

NOTE: Because the metallic pad on the bottom of the DFN package is connected to the substrate of the die, Clare recommends that no printed circuit board traces or vias be placed under this area to maintain minimum creepage and clearance values.

3.3 Tape and Reel Packaging

3.3.1 16-Pin SOIC

Tape and Reel Packaging for 16-Pin SOIC Package

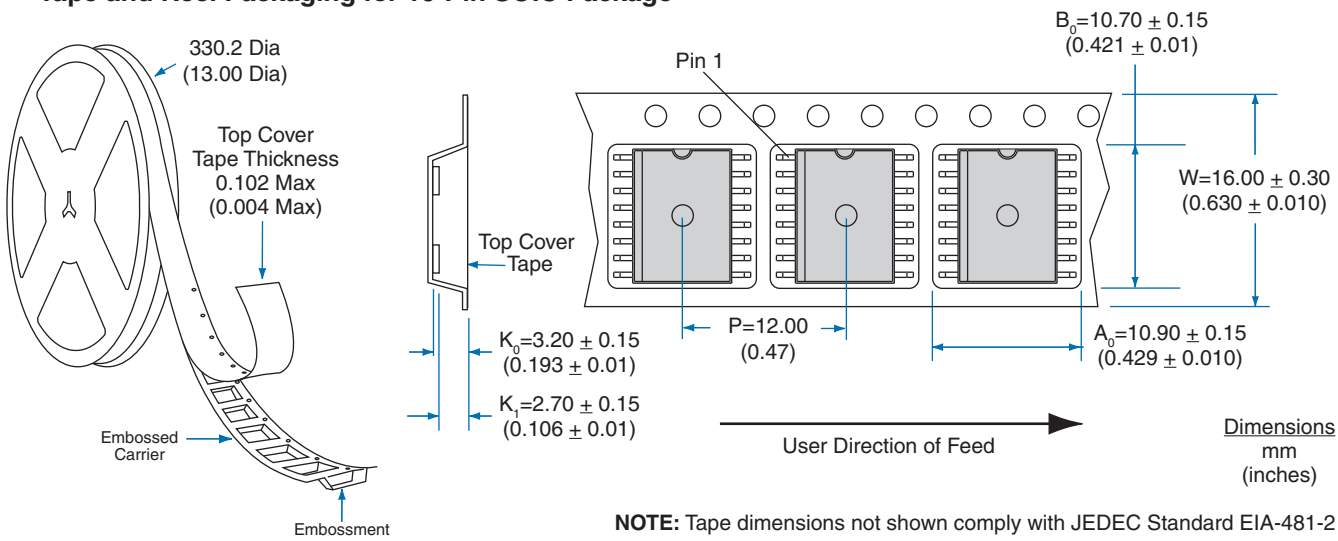

NOTE: Tape dimensions not shown comply with JEDEC Standard EIA-481-2

3.3.2 16-Pin DFN

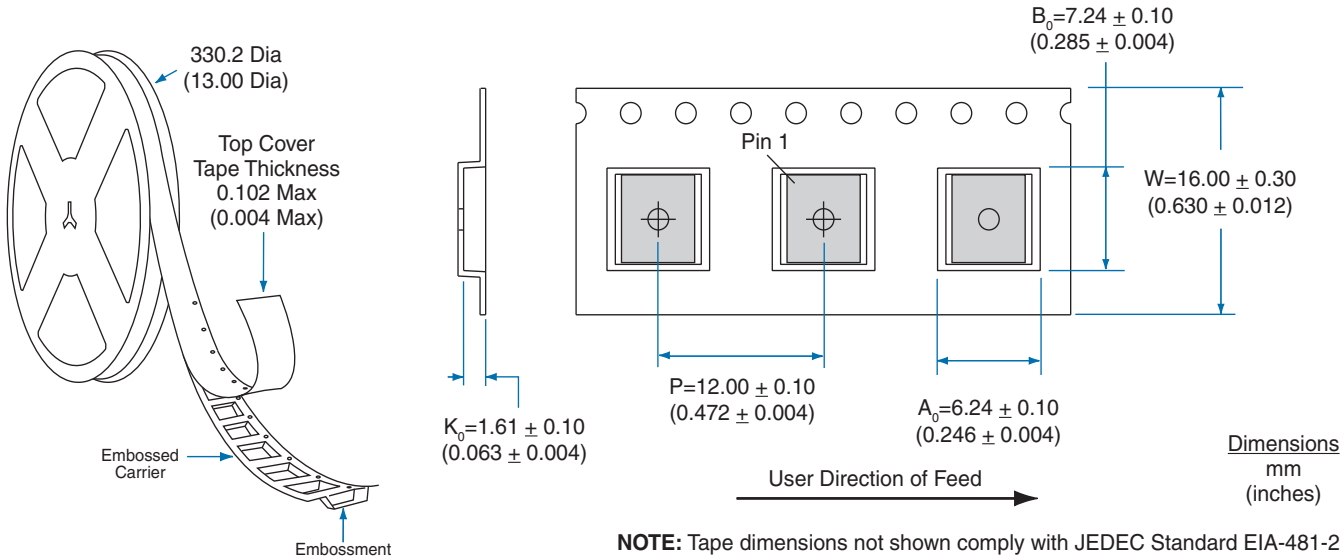

NOTE: Tape dimensions not shown comply with JEDEC Standard EIA-481-2

3.4 Soldering

3.4.1 Moisture Reflow Sensitivity

Clare has characterized the moisture reflow sensitivity for this product using IPC/JEDEC standard J-STD-020. Moisture uptake from atmospheric humidity occurs by diffusion. During the solder reflow process, in which the component is attached to the PCB, the whole body of the component is exposed to high process temperatures. The combination of moisture uptake and high reflow soldering temperatures may lead to moisture induced delamination and cracking of the component. To prevent this, this component must be handled in accordance with IPC/JEDEC standard J-STD-033 per the labeled moisture sensitivity level (MSL), level 1 for the SOIC package, and level 3 for the DFN package.

3.4.2 Reflow Profile

For proper assembly, this component must be processed in accordance with the current revision of IPC/JEDEC standard J-STD-020. Failure to follow the recommended guidelines may cause permanent damage to the device resulting in impaired performance and/or a reduced lifetime expectancy.

3.5 Washing

Clare does not recommend ultrasonic cleaning of this part.

For additional information please visit www.clare.com

Clare, Inc. makes no representations or warranties with respect to the accuracy or completeness of the contents of this publication and reserves the right to make changes to specifications and product descriptions at any time without notice. Neither circuit patent licenses or indemnity are expressed or implied. Except as set forth in Clare's Standard Terms and Conditions of Sale, Clare, Inc. assumes no liability whatsoever, and disclaims any express or implied warranty relating to its products, including, but not limited to, the implied warranty of merchantability, fitness for a particular purpose, or infringement of any intellectual property right.

The products described in this document are not designed, intended, authorized, or warranted for use as components in systems intended for surgical implant into the body, or in other applications intended to support or sustain life, or where malfunction of Clare's product may result in direct physical harm, injury, or death to a person or severe property or environmental damage. Clare, Inc. reserves the right to discontinue or make changes to its products at any time without notice.

Specifications: DS-CPC7582-R05
© Copyright 2009, Clare, Inc.
All rights reserved. Printed in USA.
10/14/09

Мы молодая и активно развивающаяся компания в области поставок электронных компонентов. Мы поставляем электронные компоненты отечественного и импортного производства напрямую от производителей и с крупнейших складов мира.

Благодаря сотрудничеству с мировыми поставщиками мы осуществляем комплексные и плановые поставки широчайшего спектра электронных компонентов.

Собственная эффективная логистика и склад в обеспечивает надежную поставку продукции в точно указанные сроки по всей России.

Мы осуществляем техническую поддержку нашим клиентам и предпродажную проверку качества продукции. На все поставляемые продукты мы предоставляем гарантию .

Осуществляем поставки продукции под контролем ВП МО РФ на предприятия военно-промышленного комплекса России , а также работаем в рамках 275 ФЗ с открытием отдельных счетов в уполномоченном банке. Система менеджмента качества компании соответствует требованиям ГОСТ ISO 9001.

Минимальные сроки поставки, гибкие цены, неограниченный ассортимент и индивидуальный подход к клиентам являются основой для выстраивания долгосрочного и эффективного сотрудничества с предприятиями радиоэлектронной промышленности, предприятиями ВПК и научно-исследовательскими институтами России.

С нами вы становитесь еще успешнее!

Наши контакты:

Телефон: +7 812 627 14 35

Электронная почта: sales@st-electron.ru

Адрес: 198099, Санкт-Петербург, Промышленная ул, дом № 19, литера Н, помещение 100-Н Офис 331