PCB Fuse Clips for ATC/ATM Blade, 5mm, 1/4" & 13/32" Diameter Fuses

1AXXXX Series

For 1/4" Diameter Fuses

1A1119 Series***
With End Stops and Angled In leads
Dimensional Data

RoHS

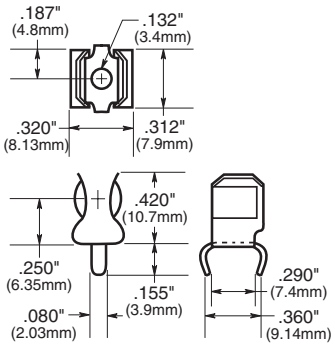

Catalog Number	Clip Mat.*	Finish
1A1119-04	BeCu**	Bright Tin
1A1119-05	BeCu**	Silver
1A1119-10	Cart. Brass	Bright Tin

1A1120 Series***
Without End Stops and Angled In Leads
Dimensional Data

RoHS

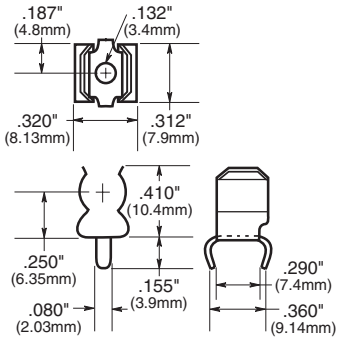

Catalog Number	Clip Mat.*	Finish
1A1120-02	Cart. Brass	Bright Dip
1A1120-05	BeCu**	Silver
1A1120-06	BeCu**	Bright Tin
1A1120-09	Cart. Brass	Bright Tin

1A1907 Series***
With End Stops & Straight Leads
Dimensional Data

RoHS

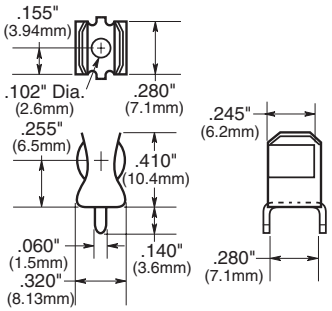

Catalog Number	Clip Mat.*	Finish
1A1907-02	Cart. Brass	None Bright Dipped
1A1907-03	BeCu**	Bright Tin
1A1907-05	BeCu**	Silver
1A1907-06	Cart. Brass	Bright Tin

1A3398 Series***
Without End Stops & Straight Leads
Dimensional Data

RoHS

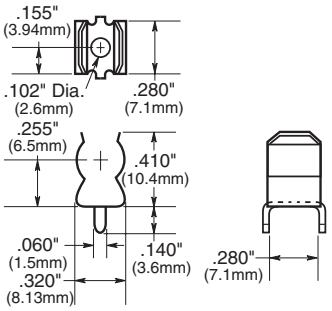

Catalog Number	Clip Mat.*	Finish
1A3398-07	Cart. Brass	Bright Tin

1A4534 Series***
With End Stops & Angled Out Leads
Dimensional Data

RoHS

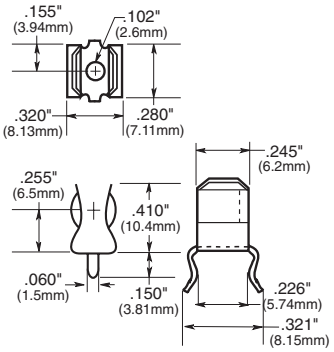

Catalog Number	Clip Mat.*	Finish
1A4534-01	BeCu**	Bright Tin
1A4534-06	Cart. Brass	Bright Tin

1A4533 Series***
Without End Stops & Angled Out Leads
Dimensional Data

RoHS

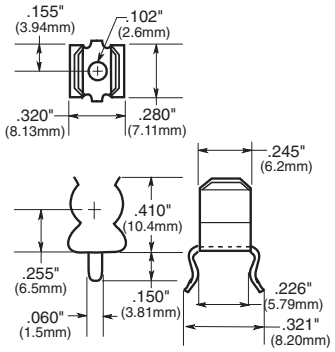

Catalog Number	Clip Mat.*	Finish
1A4533-01	BeCu**	Bright Tin
1A4533-06	Cart. Brass	Bright Tin

*Spg. Br. - Spring Bronze; BeCu - Beryllium Copper; Cart. Brass - Cartridge Brass
**Beryllium copper recommended for currents higher than 15 amps.

*****For RoHS compliant version add "-R" option code suffix to part number.**

PCB Fuse Clips for ATC/ATM Blade, 5mm, 1/4" & 13/32" Diameter Fuses

1AXXXX Series

For 5mm Diameter Fuses

1A5601 Series (0 to 7 amps)
Dimensional Data

RoHS

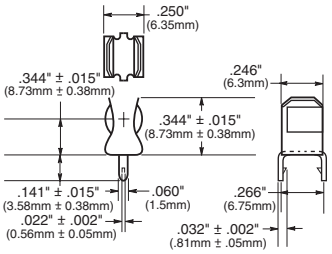

Catalog Number	Clip Mat.*	Finish
1A5601	Cart. Brass	Bright Tin

1A3399 and 1A5018 Series***
With Straight Leads
Dimensional Data

RoHS

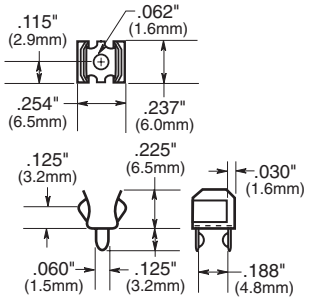

Catalog Number	Clip Mat.*	Finish
1A3399-10	Spg. Br.	Bright Tin
1A3399-01	BeCu**	Silver
1A3399-04	BeCu**	Bright Tin

1A5602 Series (0 to 7 Amps)
Dimensional Data

RoHS

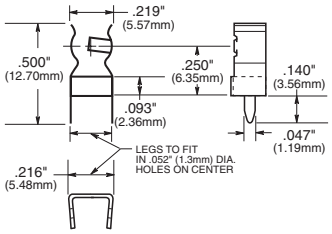

Catalog Number	Clip Mat.	Finish
1A5602	Cart. Brass	Bright Tin

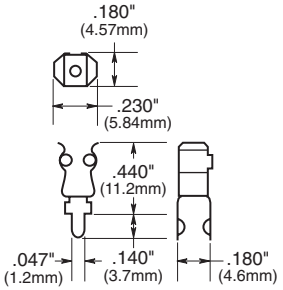

High Profile

Catalog Number	Clip Mat.*	Finish
1A5018-10	Spg. Br.	Bright Tin
1A5018-7	Spg. Br.	Silver

Specifications
5mm PCB Mount Fuseclips
Current Rating: 15A
Voltage Rating: 500Vac
PCB Terminals: Solder Lug

*Spg. Br. - Spring Bronze; BeCu - Beryllium Copper; Cart. Brass - Cartridge Brass.
**Beryllium copper recommended for currents higher than 15 amps.

For 13/32" Diameter Fuses

1A3400 Series***
With End Stops & Straight Leads
Dimensional Data

RoHS

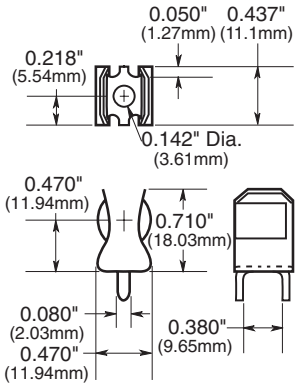

1A3400-09 & 1A3400-10

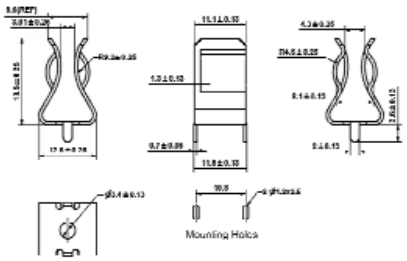

1A3400-12

Specifications:

Catalog Number	Clip Material	Finish	Amp Rating
1A3400-09	Spring Bronze	Bright Tin	20A Max.
1A3400-10	Beryllium Copper	Silver	30A Max.
1A3400-12	Spring Brass	Bright Tin	15A Max.

*****For RoHS compliant version add "-R" option code suffix to part number.**

PCB Fuse Clips for ATC/ATM Blade, 5mm, ¼" & 13/32" Diameter Fuses

1AXXXX Series

ATM Fuses
1A5778 Series
Dimensional Data

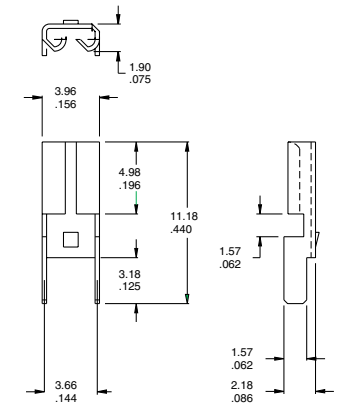

MATERIAL: BRASS, NICKEL PLATED, .30 .012 THICK

1A5779 Series

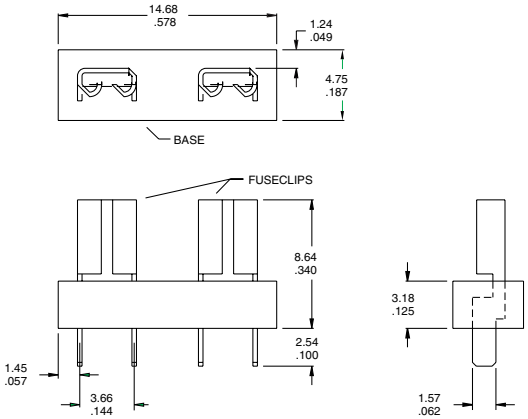

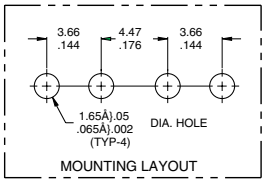

SPECIFICATIONS

FUSECLIPS	BRASS, NICKEL PLATED
BASE MATERIAL	GLASS FILLED NYLON, UL RATED 94V-0
CURRENT RATING	15 AMPS
VOLTAGE RATING	500V AC
TEMPERATURE RATING . .	-50flC -58flF TO 145flC 292flF

ATC Fuses (0 to 20 Amps)
1A5600 Series
Dimensional Data

RoHS

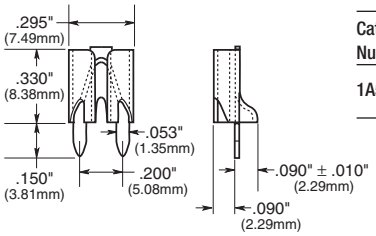

Catalog Number	Clip Mat.*	Finish
1A5600	Cart. Brass	Satin Finish Tin

1A5780 Series
Dimensional Data

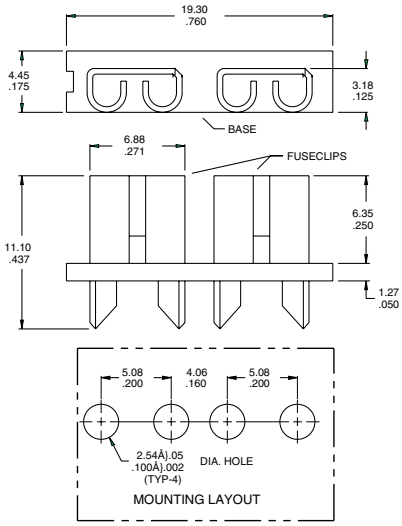

SPECIFICATIONS

FUSECLIPS	BRASS, NICKEL PLATED
BASE MATERIAL	GLASS FILLED NYLON, UL RATED 94V-0
CURRENT RATING	15 AMPS
VOLTAGE RATING	500V AC
TEMPERATURE RATING . .	-50flC TO 145flC -58flF 292flF

*Spg. Br. - Spring Bronze; BeCu - Beryllium Copper; Cart. Brass - Cartridge Brass

*****For RoHS compliant version add "-R" option code suffix to part number.**

PCB Fuse Clips for ATC/ATM Blade, 5mm, ¼" & 13/32" Diameter Fuses

1AXXXX Series

Fuse Clip Catalog Numbers

Footprint Dimensional Data

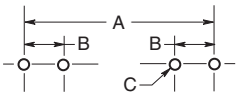

Dimensions

Catalog Number	A: ⅞" (22.2mm)	A: 1" (25.4mm)	A: 1¼" (31.8mm)	A: 1⅜" (34.93mm)	A: 1½" (38.10mm)	A: 20mm	ATC	ATM	B Tabs	C (4 holes)	Board Thickness
1A5778-	—	—	—	—	—	—	—	0.464" (11.79)	0.144" (3.66)	0.065"±0.002" (1.65±0.05)	0.062" (1.57)
1A5779-	—	—	—	—	—	—	—	0.464" (11.79)	0.144" (3.66)	0.065"±.002" (1.65±.05)	0.062" (1.57)
1A5780-	—	—	—	—	—	—	0.560 (14.22)	—	0.200" (5.08)	0.100"±0.002" (2.54±0.05)	0.062" (1.57)
1A3398- 1A1907-	1.00" (25.40)	1.125" (28.58)	1.375" (34.920)	—	—	—	—	—	0.295"-0.305" (7.49-7.75)	0.067"-.070" (1.70-1.78)	0.093" (2.36)
1A1119-	1.00" (25.40)	1.125" (28.58)	1.375" (34.92)	—	—	—	—	—	0.295"-0.305" (7.49-7.75)	0.093"±0.002" (2.36±0.05)	0.062"to 0.125" (1.57to3.18)
1A1120-	1.00" (25.40)	1.125" (28.58)	1.375" (34.920)	—	—	—	—	—	0.295"-0.305" (7.49-7.75)	0.093"±0.002" (2.36±0.05)	0.062"to 0.125" (1.57 to 3.18)
1A3399-	—	—	—	—	—	0.875" (22.23)	—	—	0.200" (5.08)	0.067"-.070" (1.70-1.78)	093" (2.36)
1A3400-	—	—	—	1.50" (38.10)	1.625"— (41.28)		—	—	0.405" (10.29)	0.091"-.095" (2.31-2.41)	0.125" (3.18)
1A4533-	1.00" (25.40)	1.125" (28.58)	1.375" (34.920)	—	—	—	—	—	0.300" (7.62)	0.067"-.070" (1.70-1.78)	0.062" (1.57)
1A4534-	1.00" (25.40)	1.125" (28.58)	1.375" (34.920)	—	—	—	—	—	0.300" (7.62)	0.067"-.070" (1.70-1.78)	0.062" (1.57)
1A5018-	—	—	—	—	—	0.820"±0.015" (20.80±0.38)	—	—	0.180" (4.6)	0.053"-.002" (1.35-0.05)	0.093" (2.36)
1A5600-	—	—	—	—	—	—	—	—	0.200" (5.08)	0.052"±0.003" (1.32±0.077)	0.125"max. (3.18)
1A5601-	—	—	—	—	—	0.820"±0.015" (20.80±0.38)	—	—	0.266" (6.76)	0.067"±0.003" (1.70±0.074)	0.062" (1.57)
1A5602-	—	—	—	—	—	—	—	—	0.220" (5.588)		0.125"max. (3.175)

*Spg. Br. - Spring Bronze; BeCu - Beryllium Copper; Cart. Brass - Cartridge Brass
**Beryllium copper recommended for currents higher than 15 amps.

The only controlled copy of this Data Sheet is the electronic read-only version located on the Cooper Bussmann Network Drive. All other copies of this document are by definition uncontrolled. This bulletin is intended to clearly present comprehensive product data and provide technical information that will help the end user with design applications. Cooper Bussmann reserves the right, without notice, to change design or construction of any products and to discontinue or limit distribution of any products. Cooper Bussmann also reserves the right to change or update, without notice, any technical information contained in this bulletin. Once a product has been selected, it should be tested by the user in all possible applications.

© 2011 Cooper Bussmann
www.cooperbussmann.com

Мы молодая и активно развивающаяся компания в области поставок электронных компонентов. Мы поставляем электронные компоненты отечественного и импортного производства напрямую от производителей и с крупнейших складов мира.

Благодаря сотрудничеству с мировыми поставщиками мы осуществляем комплексные и плановые поставки широчайшего спектра электронных компонентов.

Собственная эффективная логистика и склад в обеспечивает надежную поставку продукции в точно указанные сроки по всей России.

Мы осуществляем техническую поддержку нашим клиентам и предпродажную проверку качества продукции. На все поставляемые продукты мы предоставляем гарантию .

Осуществляем поставки продукции под контролем ВП МО РФ на предприятия военно-промышленного комплекса России , а также работаем в рамках 275 ФЗ с открытием отдельных счетов в уполномоченном банке. Система менеджмента качества компании соответствует требованиям ГОСТ ISO 9001.

Минимальные сроки поставки, гибкие цены, неограниченный ассортимент и индивидуальный подход к клиентам являются основой для выстраивания долгосрочного и эффективного сотрудничества с предприятиями радиоэлектронной промышленности, предприятиями ВПК и научно-исследовательскими институтами России.

С нами вы становитесь еще успешнее!

Наши контакты:

Телефон: +7 812 627 14 35

Электронная почта: sales@st-electron.ru

Адрес: 198099, Санкт-Петербург, Промышленная ул, дом № 19, литера Н, помещение 100-Н Офис 331