National Semiconductor

September 1995

54ABT/74ABT373
Octal Transparent Latch with TRI-STATE® Outputs

General Description

The 'ABT373 consists of eight latches with TRI-STATE outputs for bus organized system applications. The flip-flops appear transparent to the data when Latch Enable (LE) is HIGH. When LE is LOW, the data that meets the setup times is latched. Data appears on the bus when the Output Enable ($\overline{OE}$) is LOW. When $\overline{OE}$ is HIGH the bus output is in the high impedance state.

Features

- TRI-STATE outputs for bus interfacing
- Output sink capability of 64 mA, source capability of 32 mA
- Guaranteed output skew
- Guaranteed multiple output switching specifications
- Output switching specified for both 50 pF and 250 pF loads
- Guaranteed simultaneous switching, noise level and dynamic threshold performance
- Guaranteed latchup protection
- High impedance glitch free bus loading during entire power up and power down
- Nondestructive hot insertion capability
- Standard Military Drawing (SMD) 5962-9321801

Commercial	Military	Package Number	Package Description
74ABT373CSC (Note 1)		M20B	20-Lead (0.300″ Wide) Molded Small Outline, JEDEC
74ABT373CSJ (Note 1)		M20D	20-Lead (0.300″ Wide) Molded Small Outline, EIAJ
74ABT373CPC		N20B	20-Lead (0.300″ Wide) Molded Dual-In-Line
	54ABT373J/883	J20A	20-Lead Ceramic Dual-In-Line
74ABT373CMSA (Note 1)		MSA20	20-Lead Molded Shrink Small Outline, EIAJ Type II
	54ABT373W/883	W20A	20-Lead Cerpack
	54ABT373E/883	E20A	20-Lead Ceramic Leadless Chip Carrier, Type C
74ABT373CMTC (Notes 1, 2)		MTC20	20-Lead Molded Thin Shrink Small Outline, JEDEC

Note 1: Devices also available in 13″ reel. Use suffix = SCX, SJX, MSAX, and MTCX.

Note 2: Contact factory for package availability.

Connection Diagrams

Pin Assignment for DIP, SOIC, SSOP and Flatpak

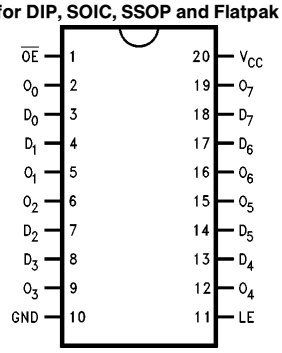

TL/F/11547–1

Pin Assignment for LCC

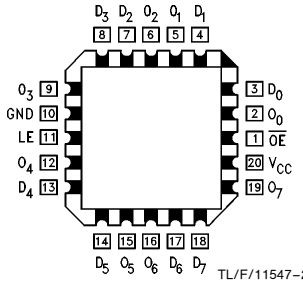

TL/F/11547–2

Pin Names	Description
D_0–D_7	Data Inputs
LE	Latch Enable Input (Active HIGH)
$\overline{OE}$	Output Enable Input (Active LOW)
O_0–O_7	TRI-STATE Latch Outputs

TRI-STATE® is a registered trademark of National Semiconductor Corporation.

©1995 National Semiconductor Corporation TL/F/11547

RRD-B30M115/Printed in U. S. A.

Functional Description

The ’ABT373 contains eight D-type latches with TRI-STATE output buffers. When the Latch Enable (LE) input is HIGH, data on the D_n inputs enters the latches. In this condition the latches are transparent, i.e., a latch output will change state each time its D input changes. When LE is LOW, the latches store the information that was present on the D inputs a setup time preceding the HIGH-to-LOW transition of LE. The TRI-STATE buffers are controlled by the Output Enable ($\overline{OE}$) input. When $\overline{OE}$ is LOW, the buffers are in the bi-state mode. When $\overline{OE}$ is HIGH the buffers are in the high impedance mode but this does not interfere with entering new data into the latches.

Truth Table

Inputs			Output
LE	**$\overline{OE}$**	**D_n**	**O_n**
H	L	H	H
H	L	L	L
L	L	X	O_n (no change)
X	H	X	Z

H = HIGH Voltage Level
L = LOW Voltage Level
X = Immaterial
Z = High Impedance State

Logic Diagram

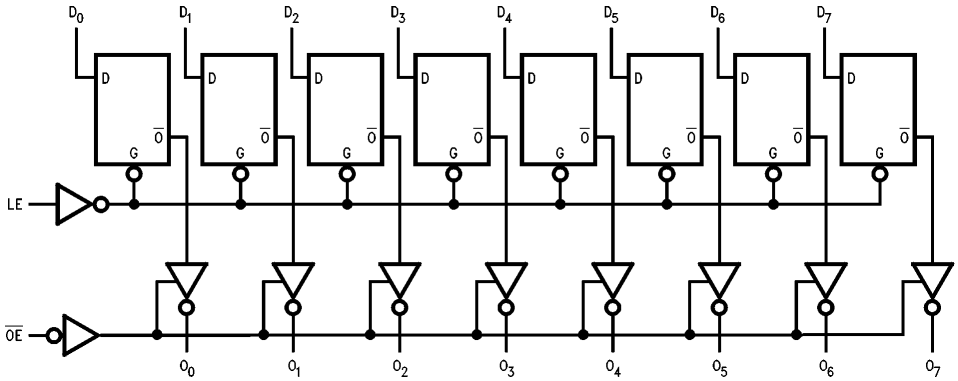

TL/F/11547–3

Please note that this diagram is provided only for the understanding of logic operations and should not be used to estimate propagation delays.

Absolute Maximum Ratings (Note 1)

If Military/Aerospace specified devices are required, please contact the National Semiconductor Sales Office/Distributors for availability and specifications.

Storage Temperature	−65°C to +150°C
Ambient Temperature under Bias	−55°C to +125°C
Junction Temperature under Bias	
Ceramic	−55°C to +175°C
Plastic	−55°C to +150°C
V_{CC} Pin Potential to Ground Pin	−0.5V to +7.0V
Input Voltage (Note 2)	−0.5V to +7.0V
Input Current (Note 2)	−30 mA to +5.0 mA
Voltage Applied to Any Output	
in the Disabled or Power-Off State	−0.5V to +5.5V
in the HIGH State	−0.5V to V_{CC}
Current Applied to Output in LOW State (Max)	twice the rated I_{OL} (mA)
DC Latchup Source Current: (Across Comm Operating Range)	$\overline{OE}$ Pin −150 mA; Other Pins −500 mA
Over Voltage Latchup (I/O)	10V

Note 1: Absolute maximum ratings are values beyond which the device may be damaged or have its useful life impaired. Functional operation under these conditions is not implied.

Note 2: Either voltage limit or current limit is sufficient to protect inputs.

Recommended Operating Conditions

Free Air Ambient Temperature	
Military	−55°C to +125°C
Commercial	−40°C to +85°C
Supply Voltage	
Military	+4.5V to +5.5V
Commercial	+4.5V to +5.5V
Minimum Input Edge Rate	(ΔV/Δt)
Data Input	50 mV/ns
Enable Input	20 mV/ns

DC Electrical Characteristics

Symbol	Parameter		ABT373 Min	ABT373 Typ	ABT373 Max	Units	V_{CC}	Conditions
V_{IH}	Input HIGH Voltage		2.0			V		Recognized HIGH Signal
V_{IL}	Input LOW Voltage				0.8	V		Recognized LOW Signal
V_{CD}	Input Clamp Diode Voltage				−1.2	V	Min	I_{IN} = −18 mA
V_{OH}	Output HIGH Voltage	54ABT/74ABT	2.5			V	Min	I_{OH} = −3 mA
		54ABT	2.0					I_{OH} = −24 mA
		74ABT	2.0					I_{OH} = −32 mA
V_{OL}	Output LOW Voltage	54ABT			0.55	V	Min	I_{OL} = 48 mA
		74ABT			0.55			I_{OL} = 64 mA
I_{IH}	Input HIGH Current				5	μA	Max	V_{IN} = 2.7V (Note 2)
					5			V_{IN} = V_{CC}
I_{BVI}	Input HIGH Current Breakdown Test				7	μA	Max	V_{IN} = 7.0V
I_{IL}	Input LOW Current				−5	μA	Max	V_{IN} = 0.5V (Note 2)
					−5			V_{IN} = 0.0V
V_{ID}	Input Leakage Test		4.75			V	0.0	I_{ID} = 1.9 μA All Other Pins Grounded
I_{OZH}	Output Leakage Current				50	μA	0 − 5.5V	V_{OUT} = 2.7V; $\overline{OE}$ = 2.0V
I_{OZL}	Output Leakage Current				−50	μA	0 − 5.5V	V_{OUT} = 0.5V; $\overline{OE}$ = 2.0V
I_{OS}	Output Short-Circuit Current		−100		−275	mA	Max	V_{OUT} = 0.0V
I_{CEX}	Output High Leakage Current				50	μA	Max	V_{OUT} = V_{CC}
I_{ZZ}	Bus Drainage Test				100	μA	0.0	V_{OUT} = 5.5V; All Others GND
I_{CCH}	Power Supply Current				50	μA	Max	All Outputs HIGH
I_{CCL}	Power Supply Current				30	mA	Max	All Outputs LOW
I_{CCZ}	Power Supply Current				50	μA	Max	$\overline{OE}$ = V_{CC} All Others at V_{CC} or GND
I_{CCT}	Additional I_{CC}/Input	Outputs Enabled			2.5	mA	Max	V_I = V_{CC} − 2.1V
		Outputs TRI-STATE			2.5	mA		Enable Input V_I = V_{CC} − 2.1V
		Outputs TRI-STATE			2.5	mA		Data Input V_I = V_{CC} − 2.1V All Others at V_{CC} or GND
I_{CCD}	Dynamic I_{CC} (Note 2)	No Load			0.12	mA/MHz	Max	Outputs Open, LE = V_{CC} $\overline{OE}$ = GND, (Note 1) One Bit Toggling, 50% Duty Cycle

Note 1: For 8 bits toggling, I_{CCD} < 0.8 mA/MHz.
Note 2: Guaranteed, but not tested.

DC Electrical Characteristics (SOIC Package) (Continued)

Symbol	Parameter	Min	Typ	Max	Units	V_{CC}	Conditions $C_L = 50$ pF, $R_L = 500\Omega$
V_{OLP}	Quiet Output Maximum Dynamic V_{OL}		0.4	0.8	V	5.0	$T_A = 25°C$ (Note 1)
V_{OLV}	Quiet Output Minimum Dynamic V_{OL}	−1.2	−0.8		V	5.0	$T_A = 25°C$ (Note 1)
V_{OHV}	Minimum High Level Dynamic Output Voltage	2.5	3.0		V	5.0	$T_A = 25°C$ (Note 3)
V_{IHD}	Minimum High Level Dynamic Input Voltage	2.0	1.7		V	5.0	$T_A = 25°C$ (Note 2)
V_{ILD}	Maximum Low Level Dynamic Input Voltage		0.9	0.6	V	5.0	$T_A = 25°C$ (Note 2)

Note 1: Max number of outputs defined as (n). n − 1 data inputs are driven 0V to 3V. One output at Low. Guaranteed, but not tested.

Note 2: Max number of data inputs (n) switching. n − 1 inputs switching 0V to 3V. Input-under-test switching: 3V to theshold (V_{ILD}), 0V to threshold (V_{IHD}). Guaranteed, but not tested.

Note 3: Max number of outputs defined as (n). n − 1 data inputs are driven 0V to 3V. One output HIGH. Guaranteed, but not tested.

AC Electrical Characteristics

Symbol	Parameter	74ABT $T_A = +25°C$, $V_{CC} = +5.0V$, $C_L = 50$ pF			54ABT $T_A = -55°C$ to $+125°C$, $V_{CC} = 4.5V$ to $5.5V$, $C_L = 50$ pF		74ABT $T_A = -40°C$ to $+85°C$, $V_{CC} = 4.5V$ to $5.5V$, $C_L = 50$ pF		Units
		Min	Typ	Max	Min	Max	Min	Max	
t_{PLH}	Propagation Delay	1.9	2.7	4.5	1.0	6.8	1.9	4.5	ns
t_{PHL}	D_n to O_n	1.9	2.8	4.5	1.0	7.0	1.9	4.5	
t_{PLH}	Propagation Delay	2.0	3.1	5.0	1.0	7.7	2.0	5.0	ns
t_{PHL}	LE to O_n	2.0	3.0	5.0	1.5	7.7	2.0	5.0	
t_{PZH}	Output Enable Time	1.5	3.1	5.3	1.0	6.7	1.5	5.3	ns
t_{PZL}		1.5	3.1	5.3	1.5	7.2	1.5	5.3	
t_{PHZ}	Output Disable Time	2.0	3.6	5.4	1.7	8.0	2.0	5.4	ns
t_{PLZ}		2.0	3.4	5.4	1.0	7.0	2.0	5.4	

AC Operating Requirements

Symbol	Parameter	74ABT $T_A = +25°C$, $V_{CC} = +5.0V$, $C_L = 50$ pF			54ABT $T_A = -55°C$ to $+125°C$, $V_{CC} = 4.5V$ to $5.5V$, $C_L = 50$ pF		74ABT $T_A = -40°C$ to $+85°C$, $V_{CC} = 4.5V$ to $5.5V$, $C_L = 50$ pF		Units
		Min	Typ	Max	Min	Max	Min	Max	
f_{toggle}	Max Toggle Frequency		100		100				MHz
$t_s(H)$	Setup Time, HIGH	1.5			2.5		1.5		ns
$t_s(L)$	or LOW D_n to LE	1.5			2.5		1.5		
$t_h(H)$	Hold Time, HIGH	1.0			2.5		1.0		ns
$t_h(L)$	or LOW D_n to LE	1.0			2.5		1.0		
$t_w(H)$	Pulse Width, LE HIGH	3.0			3.3		3.0		ns

Extended AC Electrical Characteristics

(SOIC package)

Symbol	Parameter	74ABT $T_A = -40°C$ to $+85°C$, $V_{CC} = 4.5V$ to $5.5V$, $C_L = 50$ pF, 8 Outputs Switching (Note 4)		74ABT $T_A = -40°C$ to $+85°C$, $V_{CC} = 4.5V$ to $5.5V$, $C_L = 250$ pF (Note 5)		74ABT $T_A = -40°C$ to $+85°C$, $V_{CC} = 4.5V$ to $5.5V$, $C_L = 250$ pF, 8 Outputs Switching (Note 6)		Units
		Min	Max	Min	Max	Min	Max	
t_{PLH} t_{PHL}	Propagation Delay D_n to O_n	1.5 1.5	5.2 5.2	2.0 2.0	6.8 6.8	2.0 2.0	9.0 9.0	ns
t_{PLH} t_{PHL}	Propagation Delay LE to O_n	1.5 1.5	5.5 5.5	2.0 2.0	7.5 7.5	2.0 2.0	9.5 9.5	ns
t_{PZH} t_{PZL}	Output Enable Time	1.5 1.5	6.2 6.2	2.0 2.0	8.0 8.0	2.0 2.0	10.5 10.5	ns
t_{PHZ} t_{PZL}	Output Disable Time	1.0 1.0	5.5 5.5	(Note 7)		(Note 7)		ns

Note 4: This specification is guaranteed but not tested. The limits apply to propagation delays for all paths described switching in phase (i.e., all LOW-to-HIGH, HIGH-to-LOW, etc.).

Note 5: This specification is guaranteed but not tested. The limits represent propagation delay with 250 pF load capacitors in plce of the 50 pF load capacitors in the standard AC load. This specificaiton pertains to single output switching only.

Note 6: This specification is guaranteed but not tested. The limits represent propagation delays for all paths described switching in phase (i.e., all LOW-to-HIGH, HIGH-to-LOW, etc.) with 250 pF load capacitors in place of the 50 pF load capacitors in the standard AC load.

Note 7: The TRI-STATE delay times are dominated by the RC network (500Ω, 250 pF) on the output and has been excluded from the datasheet.

Skew

Symbol	Parameter	74ABT $T_A = -40°C$ to $+85°C$, $V_{CC} = 4.5V–5.5V$, $C_L = 50$ pF, 8 Outputs Switching (Note 3)	74ABT $T_A = -40°C$ to $+85°C$, $V_{CC} = 4.5V–5.5V$, $C_L = 250$ pF, 8 Outputs Switching (Note 4)	Units
		Max	Max	
t_{OSHL} (Note 1)	Pin to Pin Skew HL Transitions	1.0	1.5	ns
t_{OSLH} (Note 1)	Pin to Pin Skew LH Transitions	1.0	1.5	ns
t_{PS} (Note 5)	Duty Cycle LH–HL Skew	1.4	3.5	ns
t_{OST} (Note 1)	Pin to Pin Skew LH/HL Transitions	1.5	3.9	ns
t_{PV} (Note 2)	Device to Device Skew LH/HL Transitions	2.0	4.0	ns

Note 1: Skew is defined as the absolute value of the difference between the actual propagation delays for any two separate outputs of the same device. The specification applies to any outputs switching HIGH to LOW (t_{OSHL}), LOW to HIGH (t_{OSLH}), or any combination switching LOW to HIGH and/or HIGH to LOW (t_{OST}). This specification is guaranteed but not tested.

Note 2: Propagation delay variation for a given set of conditions (i.e., temperature and V_{CC}) from device to device. This specification is guaranteed but not tested.

Note 3: This specification is guaranteed but not tested. The limits apply to propagation delays for all paths described switching in phase (i.e., all LOW-to-HIGH, HIGH-to-LOW, etc.).

Note 4: This specification is guaranteed but not tested. The limits represent propagation delays with 250 pF load capacitors in place of the 50 pF load capacitors in the standard AC load.

Note 5: This describes the difference between the delay of the LOW-to-HIGH and the HIGH-to-LOW transition on the same pin. It is measured across all the outputs (drivers) on the same chip, the worst (largest delta) number is the guaranteed specification. This specification is guaranteed but not tested.

Capacitance

Symbol	Parameter	Typ	Units	Conditions (T_A = 25°C)
C_{IN}	Input Capacitance	5	pF	V_{CC} = 0V
C_{OUT} (Note 1)	Output Capacitance	9	pF	V_{CC} = 5.0V

Note 1: C_{OUT} is measured at frequency f = 1 MHz, per MIL-STD-883B, Method 3012.

t_{PLH} vs Temperature (T_A)
C_L = 50 pF, 1 Output Switching
Data to Output

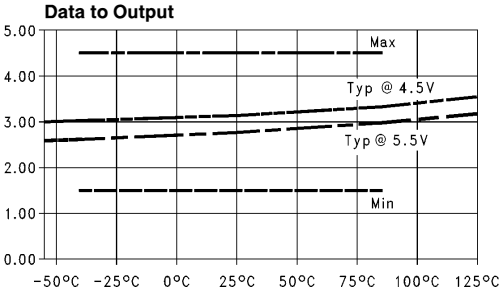

TL/F/11547–11

t_{PHL} vs Temperature (T_A)
C_L = 50 pF, 1 Output Switching
Data to Output

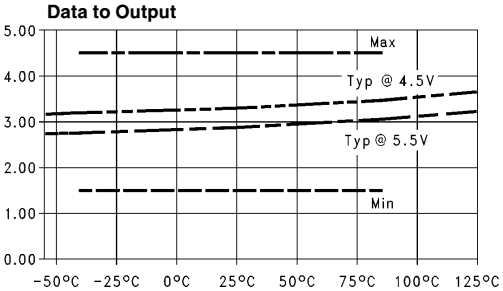

TL/F/11547–12

t_{PZH} vs Temperature (T_A)
C_L = 50 pF, 1 Output Switching
$\overline{OE}$ to Output

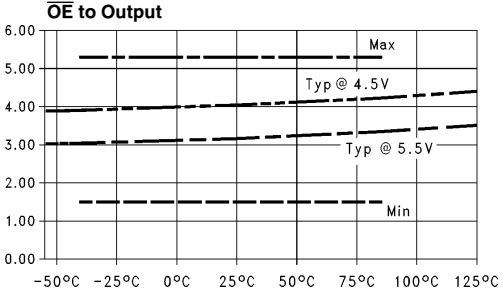

TL/F/11547–13

t_{PZL} vs Temperature (T_A)
C_L = 50 pF, 1 Output Switching
$\overline{OE}$ to Output

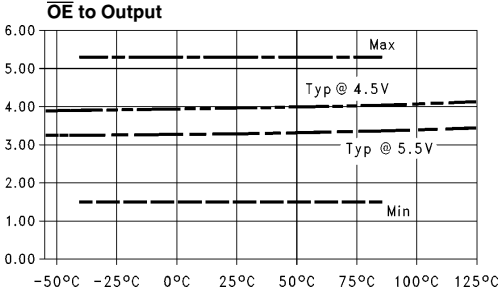

TL/F/11547–14

t_{PHZ} vs Temperature (T_A)
C_L = 50 pF, 1 Output Switching
$\overline{OE}$ to Output

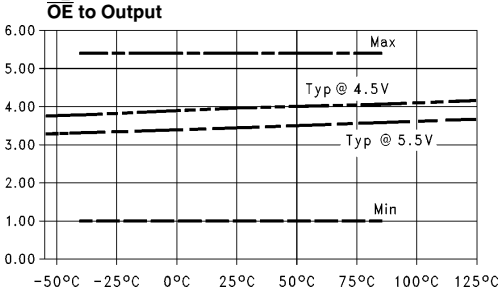

TL/F/11547–15

t_{PLZ} vs Temperature (T_A)
C_L = 50 pF, 1 Output Switching
$\overline{OE}$ to Output

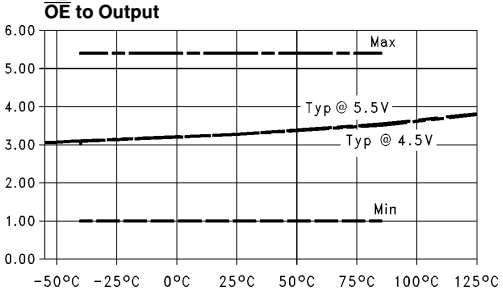

TL/F/11547–16

Dashed lines represent design characteristics; for specified guarantees, refer to AC Characteristics Tables.

t_{SET} LOW vs Temperature (T_A)
C_L = 50 pF, 1 Output Switching
Data to LE

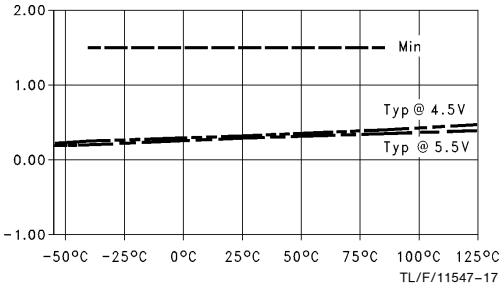

t_{SET} HIGH vs Temperature (T_A)
C_L = 50 pF, 1 Output Switching
Data to LE

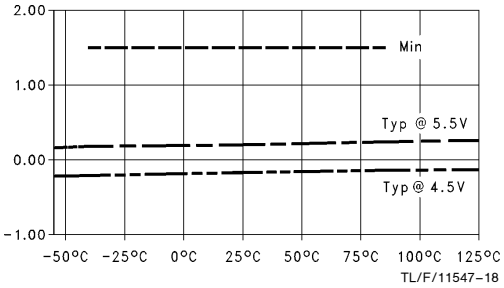

t_{HOLD} HIGH vs Temperature (T_A)
C_L = 50 pF, 1 Output Switching
Data to LE

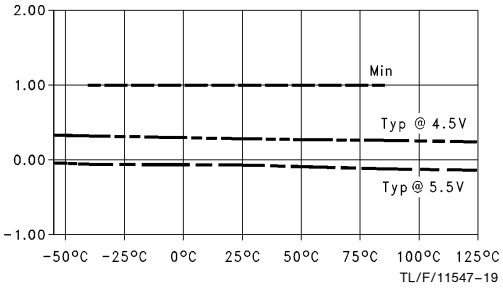

t_{HOLD} LOW vs Temperature (T_A)
C_L = 50 pF, 1 Output Switching
Data to LE

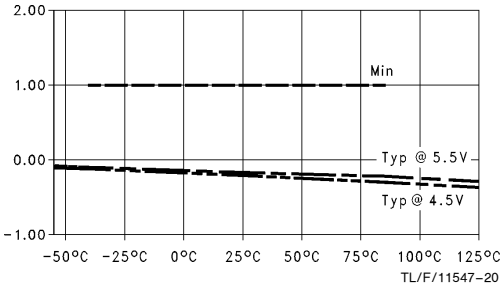

t_{PLH} vs Temperature (T_A)
C_L = 50 pF, 8 Outputs Switching
Data to Output

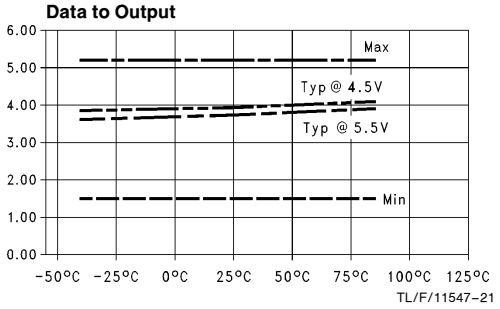

t_{PHL} vs Temperature (T_A)
C_L = 50 pF, 8 Outputs Switching
Data to Output

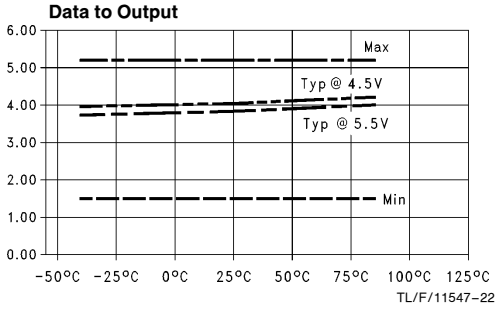

t_{PZH} vs Temperature (T_A)
C_L = 50 pF, 8 Outputs Switching
$\overline{OE}$ to Output

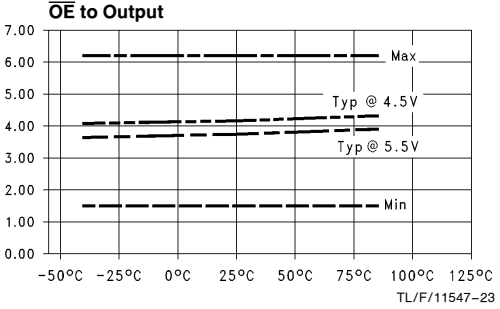

t_{PZL} vs Temperature (T_A)
C_L = 50 pF, 8 Outputs Switching
$\overline{OE}$ to Output

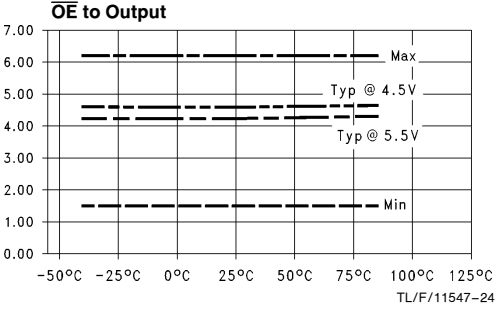

Dashed lines represent design characteristics; for specified guarantees, refer to AC Characteristics Tables.

t_{PHZ} vs Temperature (T_A)
C_L = 50 pF, 8 Outputs Switching
$\overline{OE}$ to Output

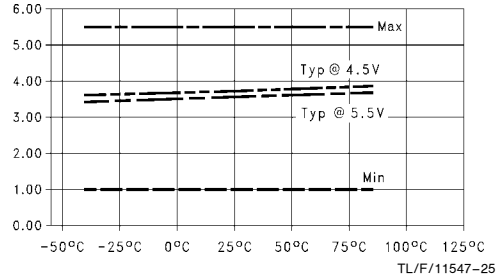

TL/F/11547–25

t_{PLZ} vs Temperature (T_A)
C_L = 50 pF, 8 Outputs Switching
$\overline{OE}$ to Output

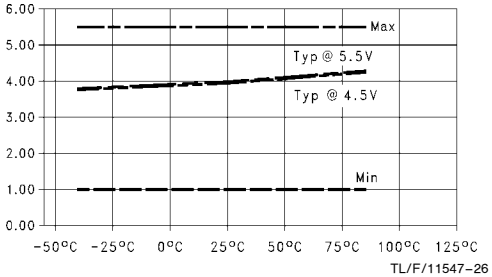

TL/F/11547–26

t_{PLH} vs Load Capacitance
T_A = 25°C, 1 Output Switching
Data to Output

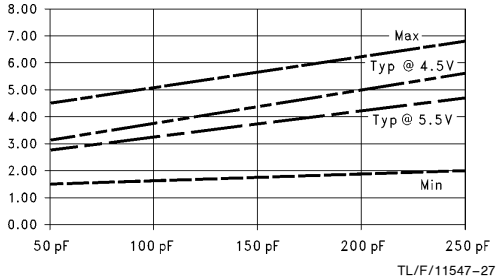

TL/F/11547–27

t_{PHL} vs Load Capacitance
T_A = 25°C, 1 Output Switching
Data to Output

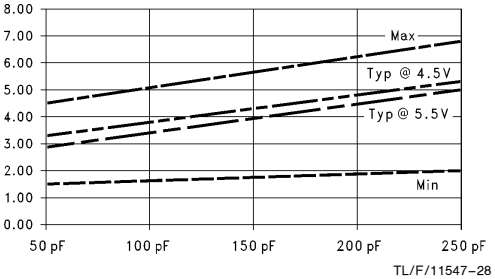

TL/F/11547–28

t_{PLH} vs Load Capacitance
T_A = 25°C, 8 Outputs Switching
Data to Output

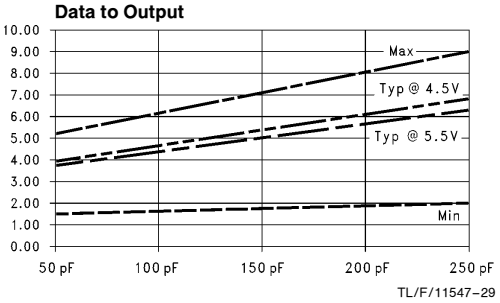

TL/F/11547–29

t_{PHL} vs Load Capacitance
T_A = 25°C, 8 Outputs Switching
Data to Output

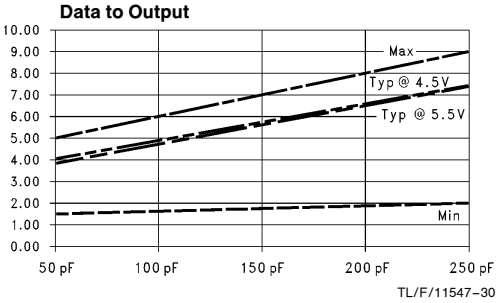

TL/F/11547–30

t_{PZH} vs Load Capacitance
T_A = 25°C, 8 Outputs Switching
$\overline{OE}$ to Output

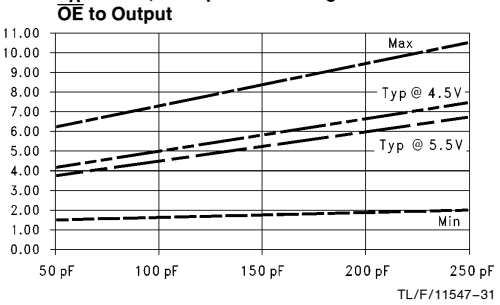

TL/F/11547–31

t_{PZL} vs Load Capacitance
T_A = 25°C, 8 Outputs Switching
$\overline{OE}$ to Output

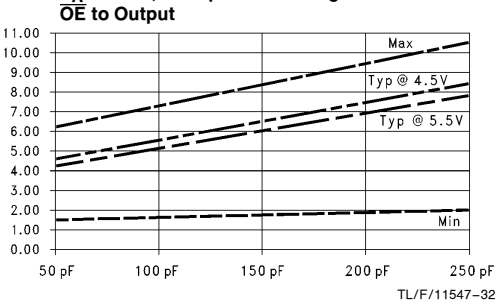

TL/F/11547–32

Dashed lines represent design characteristics; for specified guarantees, refer to AC Characteristics Tables.

t_{PLH} vs Temperature (T_A)
C_L = 50 pF, 1 Output Switching
LE to Output

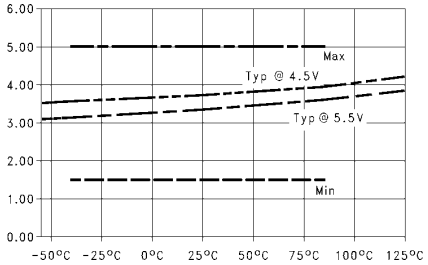

TL/F/11547−35

t_{PHL} vs Temperature (T_A)
C_L = 50 pF, 1 Output Switching
LE to Output

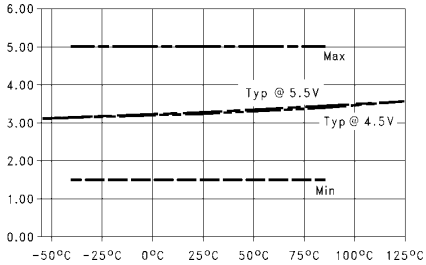

TL/F/11547−36

t_{PLH} vs Temperature (T_A)
C_L = 50 pF, 8 Outputs Switching
LE to Output

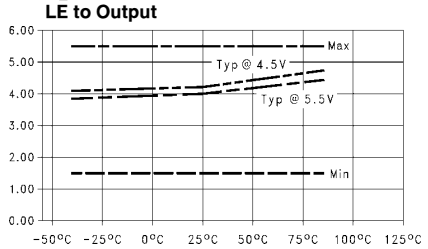

TL/F/11547−37

t_{PHL} vs Temperature (T_A)
C_L = 50 pF, 8 Outputs Switching
LE to Output

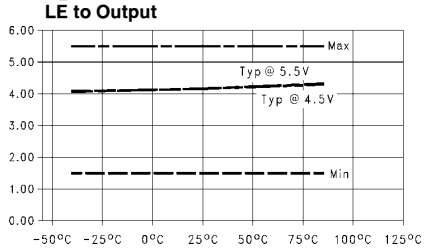

TL/F/11547−38

t_{PLH} and t_{PHL} vs Number Outputs Switching
C_L = 50 pF, T_A = 25°C, V_{CC} = 5.0V,
Outputs In Phase Data to Output

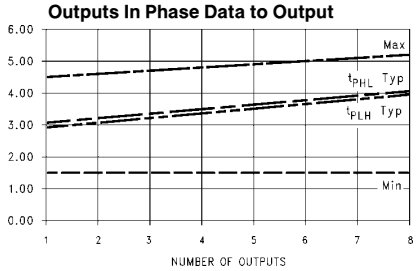

TL/F/11547−33

Typical I_{CC} vs Output Switching Frequency
C_L = 0 pF, V_{CC} = V_{IH} = 5.5V, LE = GND,
1 Output Switching at 50% Duty Cycle
Data to Output, Transparent Mode with
Unused Data Inputs = V_{IH}

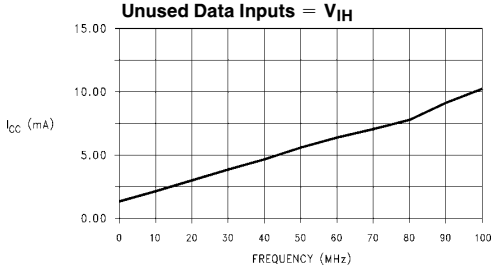

TL/F/11547−34

Dashed lines represent design characteristics; for specified guarantees, refer to AC Characteristics Tables.

AC Loading

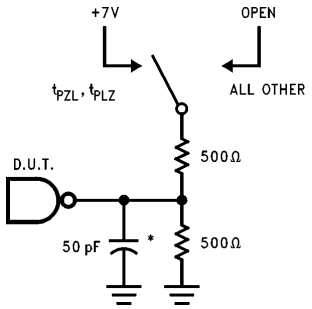

*Includes jig and probe capacitance

TL/F/11547–4

FIGURE 1. Standard AC Test Load

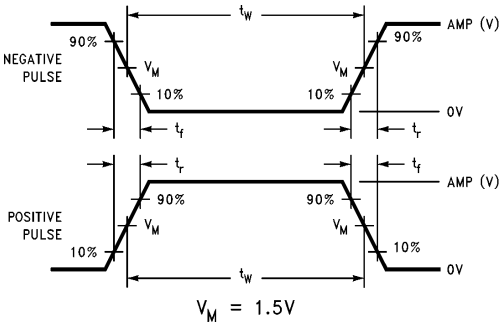

TL/F/11547–6

FIGURE 2a. Test Input Signal Levels

Amplitude	Rep. Rate	t_w	t_r	t_f
3.0V	1 MHz	500 ns	2.5 ns	2.5 ns

FIGURE 2b. Test Input Signal Requirements

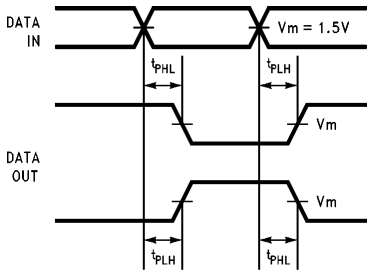

TL/F/11547–8

FIGURE 3. Propagation Delay Waveforms for Inverting and Non-Inverting Functions

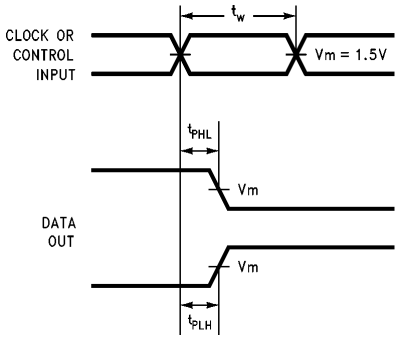

TL/F/11547–5

FIGURE 4. Propagation Delay, Pulse Width Waveforms

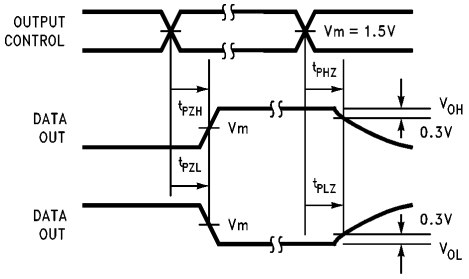

TL/F/11547–7

FIGURE 5. TRI-STATE Output HIGH and LOW Enable and Disable Times

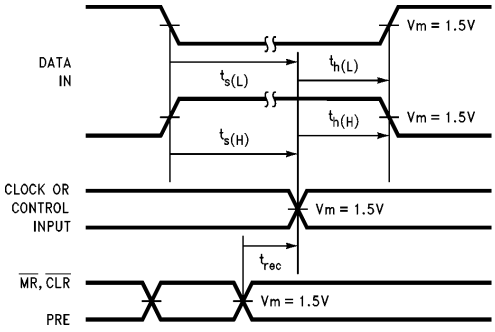

TL/F/11547–9

FIGURE 6. Setup Time, Hold Time and Recovery Time Waveforms

Ordering Information

The device number is used to form part of a simplified purchasing code where the package type and temperature range are defined as follows:

74ABT 373C S C X

Temperature Range Family
- 74ABT = Commercial
- 54ABT = Military

Device Type

Package Code
- P = Plastic DIP
- S = Small Outline (SOIC JEDEC)
- SJ = Small Outline (SOIC EIAJ)
- L = Leadless Ceramic Chip Carrier (LCC)
- F = Flatpak
- MSA = Shrink Small Outline (EIAJ SSOP, Type II)
- D = Ceramic DIP
- MTC = Molded Thin Shrink Small Outline (TSSOP)

Temperature Range
- C = Commercial (−40°C to +85°C)
- M = Military (−55°C to +125°C)

Special Variations
- X = Devices shipped in 13″ reels
- QB = Military grade device with environmental and burn-in processing shipped in tubes

TL/F/11547–39

Physical Dimensions inches (millimeters)

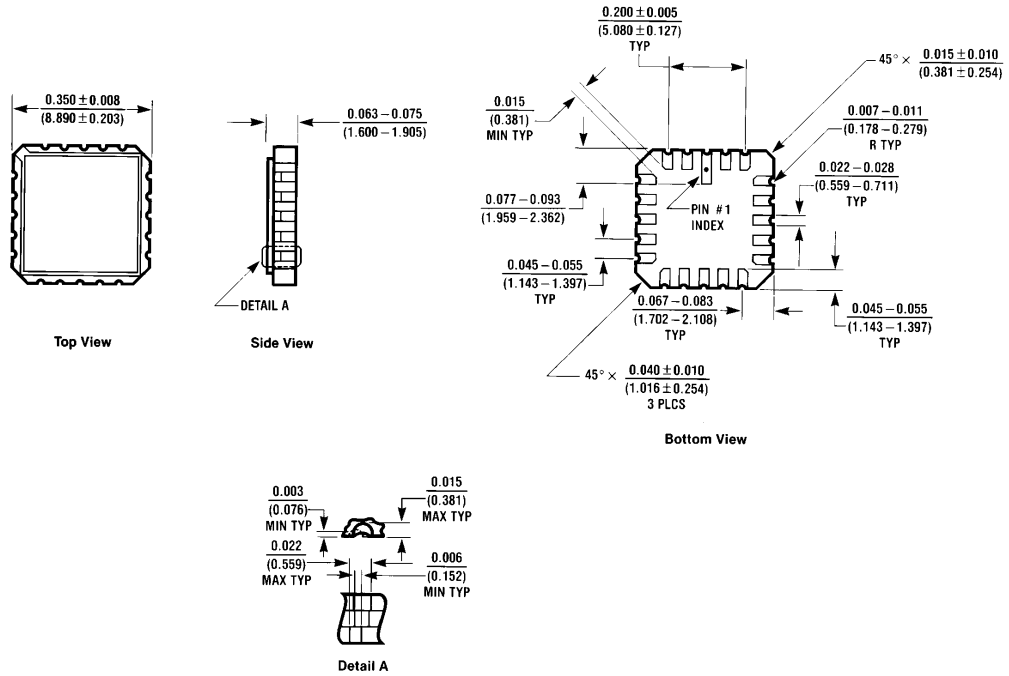

20-Terminal Ceramic Chip Carrier (L)
NS Package Number E20A

Physical Dimensions inches (millimeters) (Continued)

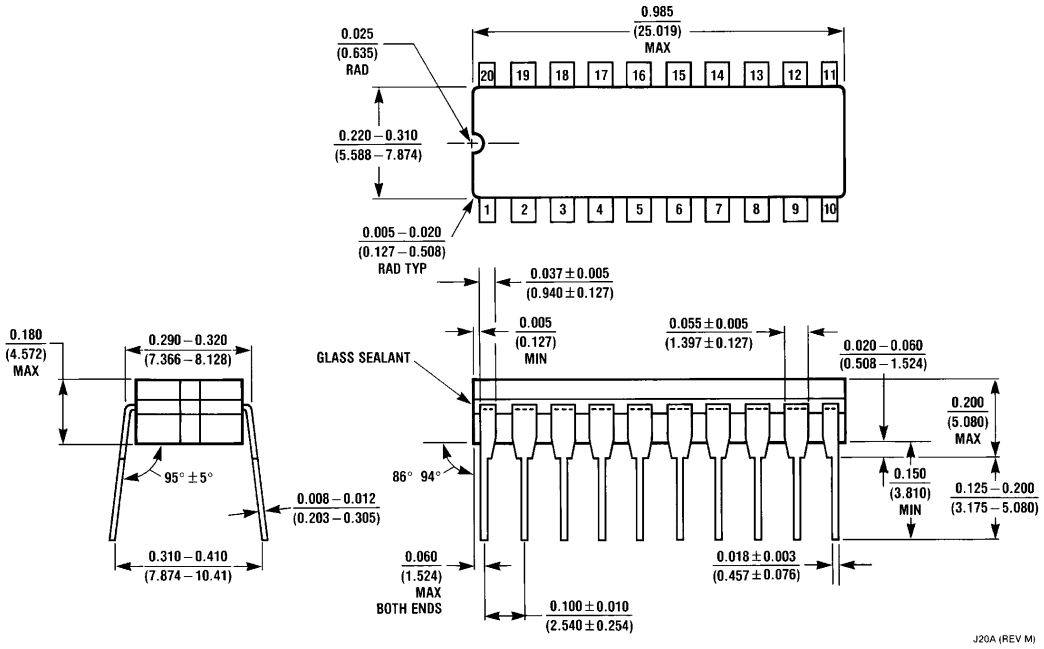

20-Lead Ceramic Dual-In-Line (D)
NS Package Number J20A

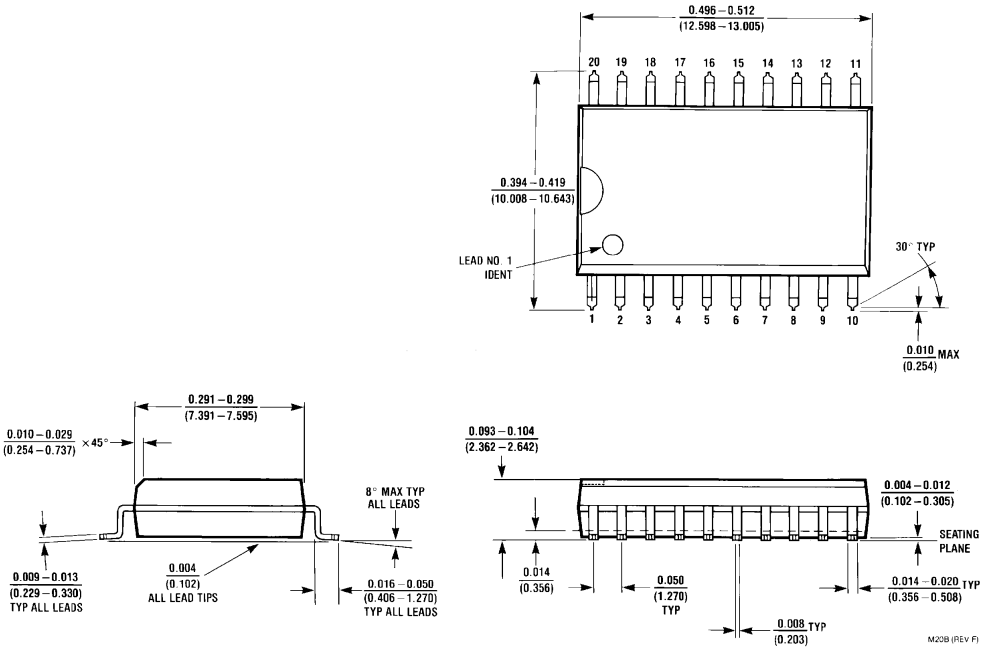

20-Lead Small Outline Integrated Circuit JEDEC (S)
NS Package Number M20B

Physical Dimensions inches (millimeters) (Continued)

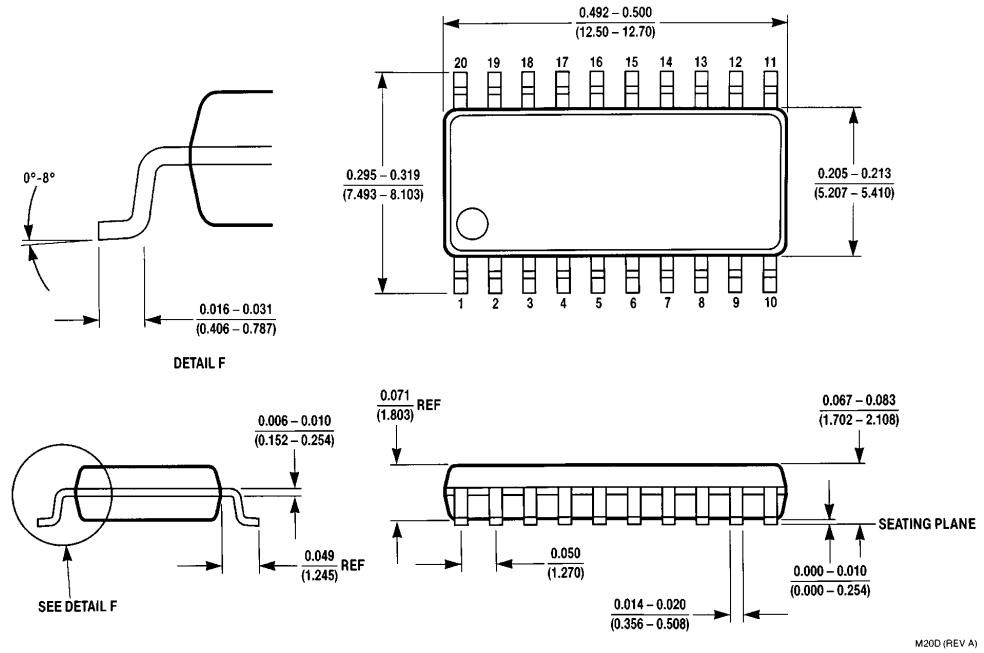

20-Lead Small Outline Integrated Circuit EIAJ (SJ)
NS Package Number M20D

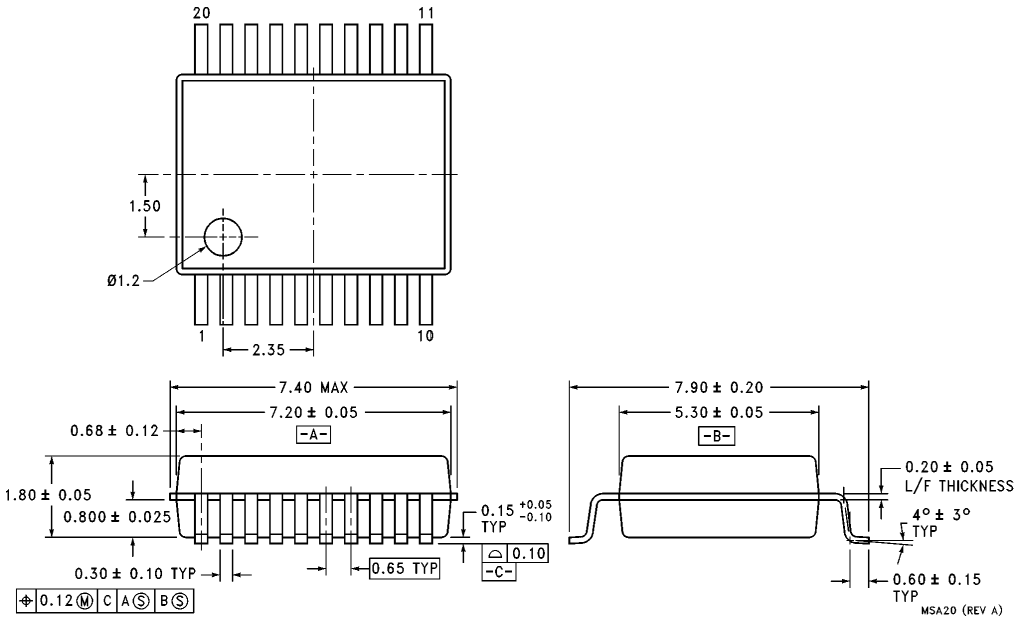

20-Lead Plastic EIAJ SSOP (MSA)
NS Package Number MSA20

Physical Dimensions inches (millimeters) (Continued)

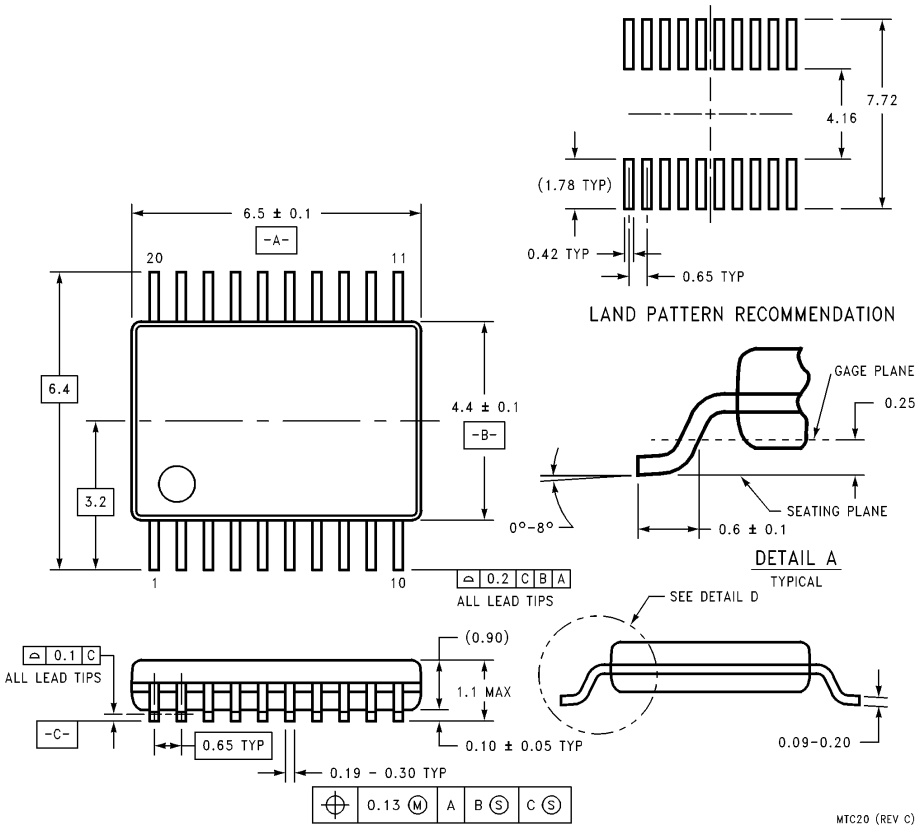

All dimensions are in millimeters.

20-Lead Molded Thin Shrink Small Outline Package JEDEC (MTC)
NS Package Number MTC20

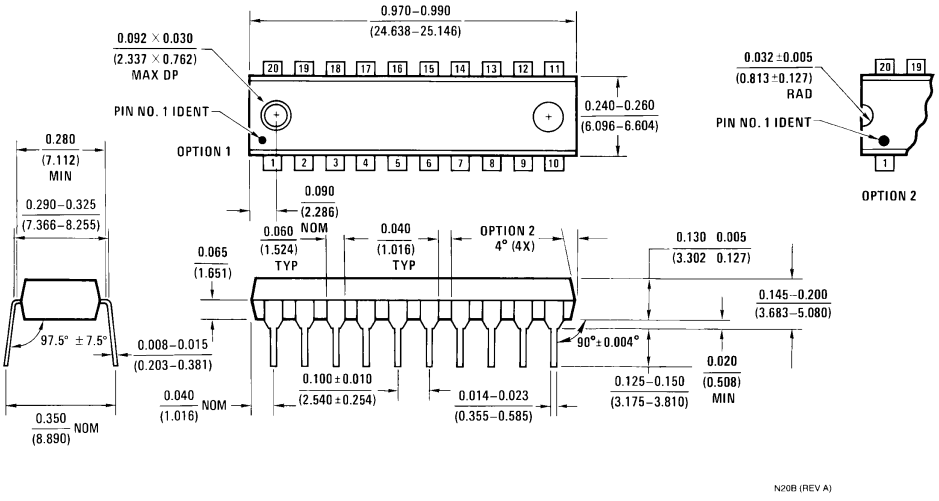

20-Lead Plastic Dual-In-Line Package (P)
NS Package Number N20B

Physical Dimensions inches (millimeters) (Continued)

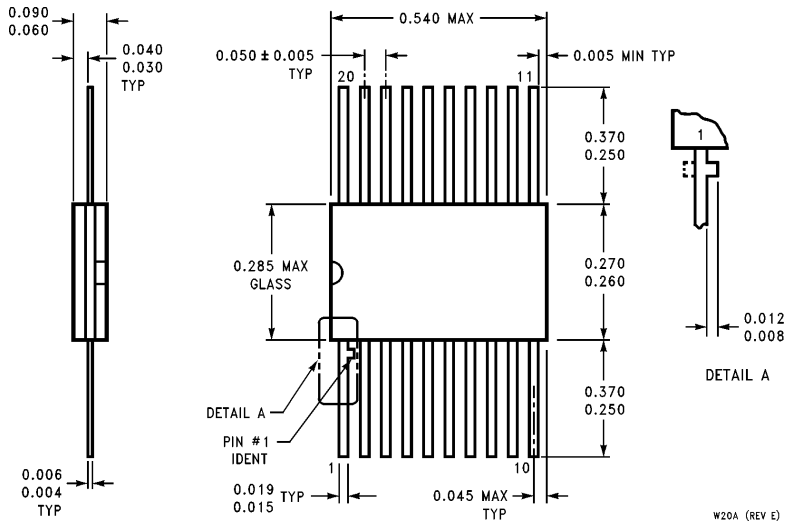

20-Lead Ceramic Flatpak (F)
NS Package Number W20A

LIFE SUPPORT POLICY

NATIONAL'S PRODUCTS ARE NOT AUTHORIZED FOR USE AS CRITICAL COMPONENTS IN LIFE SUPPORT DEVICES OR SYSTEMS WITHOUT THE EXPRESS WRITTEN APPROVAL OF THE PRESIDENT OF NATIONAL SEMICONDUCTOR CORPORATION. As used herein:

1. Life support devices or systems are devices or systems which, (a) are intended for surgical implant into the body, or (b) support or sustain life, and whose failure to perform, when properly used in accordance with instructions for use provided in the labeling, can be reasonably expected to result in a significant injury to the user.
2. A critical component is any component of a life support device or system whose failure to perform can be reasonably expected to cause the failure of the life support device or system, or to affect its safety or effectiveness.

National Semiconductor Corporation
1111 West Bardin Road
Arlington, TX 76017
Tel: 1(800) 272-9959
Fax: 1(800) 737-7018

National Semiconductor Europe
Fax: (+49) 0-180-530 85 86
Email: cnjwge@tevm2.nsc.com
Deutsch Tel: (+49) 0-180-530 85 85
English Tel: (+49) 0-180-532 78 32
Français Tel: (+49) 0-180-532 93 58
Italiano Tel: (+49) 0-180-534 16 80

National Semiconductor Hong Kong Ltd.
13th Floor, Straight Block,
Ocean Centre, 5 Canton Rd.
Tsimshatsui, Kowloon
Hong Kong
Tel: (852) 2737-1600
Fax: (852) 2736-9960

National Semiconductor Japan Ltd.
Tel: 81-043-299-2309
Fax: 81-043-299-2408

National does not assume any responsibility for use of any circuitry described, no circuit patent licenses are implied and National reserves the right at any time without notice to change said circuitry and specifications.

Мы молодая и активно развивающаяся компания в области поставок электронных компонентов. Мы поставляем электронные компоненты отечественного и импортного производства напрямую от производителей и с крупнейших складов мира.

Благодаря сотрудничеству с мировыми поставщиками мы осуществляем комплексные и плановые поставки широчайшего спектра электронных компонентов.

Собственная эффективная логистика и склад в обеспечивает надежную поставку продукции в точно указанные сроки по всей России.

Мы осуществляем техническую поддержку нашим клиентам и предпродажную проверку качества продукции. На все поставляемые продукты мы предоставляем гарантию .

Осуществляем поставки продукции под контролем ВП МО РФ на предприятия военно-промышленного комплекса России , а также работаем в рамках 275 ФЗ с открытием отдельных счетов в уполномоченном банке. Система менеджмента качества компании соответствует требованиям ГОСТ ISO 9001.

Минимальные сроки поставки, гибкие цены, неограниченный ассортимент и индивидуальный подход к клиентам являются основой для выстраивания долгосрочного и эффективного сотрудничества с предприятиями радиоэлектронной промышленности, предприятиями ВПК и научно-исследовательскими институтами России.

С нами вы становитесь еще успешнее!

Наши контакты:

Телефон: +7 812 627 14 35

Электронная почта: sales@st-electron.ru

Адрес: 198099, Санкт-Петербург, Промышленная ул, дом № 19, литера Н, помещение 100-Н Офис 331