CS209A

Proximity Detector

The CS209A is a bipolar monolithic integrated circuit for use in metal detection/proximity sensing applications. The IC (see Figure 1) contains two on−chip current regulators, oscillator and low−level feedback circuitry, peak detection/demodulation circuit, a comparator and two complementary output stages.

The oscillator, along with an external LC network, provides controlled oscillations where amplitude is highly dependent on the Q of the LC tank. During low Q conditions, a variable low−level feedback circuit provides drive to maintain oscillation. The peak demodulator senses the negative portion of the oscillator envelope and provides a demodulated waveform as input to the comparator. The comparator sets the states of the complementary outputs by comparing the input from the demodulator to an internal reference. External loads are required for the output pins.

A transient suppression circuit is included to absorb negative transients at the tank circuit terminal.

Features

- Separate Current Regulator for Oscillator
- Negative Transient Suppression
- Variable Low−Level Feedback
- Improved Performance Over Temperature
- 6.0 mA Supply Current Consumption at V_{CC} = 12 V
- Output Current Sink Capability
  - 20 mA at 4.0 V_{CC}
  - 100 mA at 24 V_{CC}

ON Semiconductor™

http://onsemi.com

MARKING DIAGRAMS

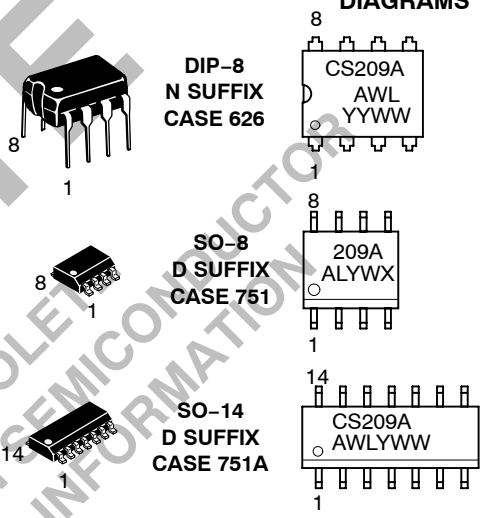

A = Assembly Location
WL, L = Wafer Lot
YY, Y = Year
WW, W = Work Week

ORDERING INFORMATION

Device	Package	Shipping
CS209AYN8	DIP−8	50 Units/Rail
CS209AYD8	SO−8	95 Units/Rail
CS209AYDR8	SO−8	2500 Tape & Reel
CS209AYD14	SO−14	55 Units/Rail
CS209AYDR14	SO−14	2500 Tape & Reel

OBSOLETE
THIS DEVICE IS OBSOLETE. PLEASE CONTACT YOUR ON SEMICONDUCTOR REPRESENTATIVE FOR INFORMATION.

PIN CONNECTIONS

DIP−8 and SO−8

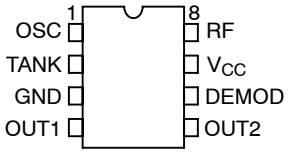

SO−14

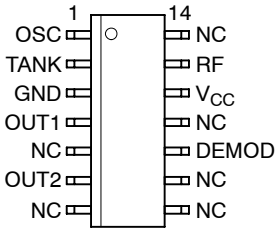

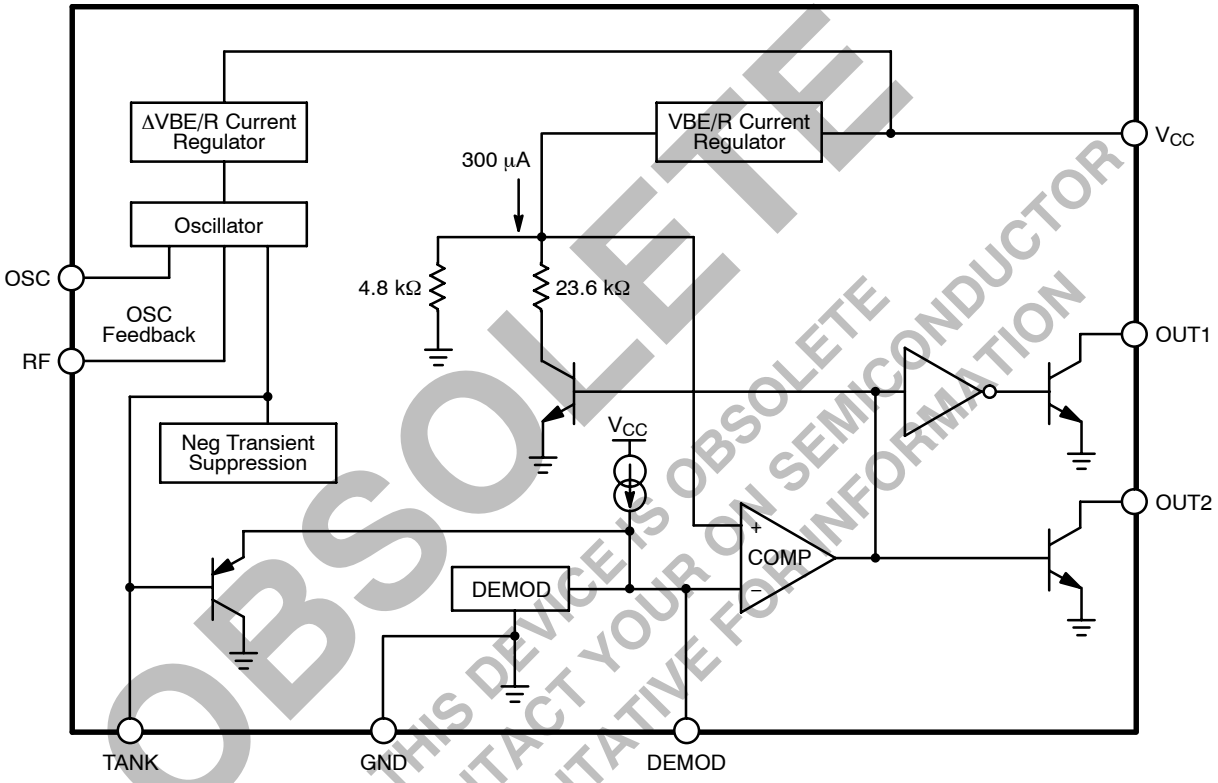

Figure 1. Block Diagram

OBSOLETE
THIS DEVICE IS OBSOLETE
PLEASE CONTACT YOUR ON SEMICONDUCTOR
REPRESENTATIVE FOR INFORMATION

ABSOLUTE MAXIMUM RATINGS*

Rating	Value	Unit
Supply Voltage	24	V
Power Dissipation (T_A = 125°C)	200	mW
Storage Temperature Range	−55 to +165	°C
Junction Temperature Range	−40 to +150	°C
Electrostatic Discharge (except TANK pin)	2.0	kV
Lead Temperature Soldering: Wave Solder (through hole styles only) (Note 1) Reflow (SMD style only) (Note 2)	260 peak 230 peak	°C °C

1. 10 second maximum.
2. 60 second maximum above 183°C.

*The maximum package power dissipation must be observed.

ELECTRICAL CHARACTERISTICS: (−40°C ≤ T_A ≤ +125°C, unless otherwise specified.)

Characteristic	Test Conditions	Min	Typ	Max	Unit
Supply Current I_{CC}	V_{CC} = 4.0 V V_{CC} = 12 V V_{CC} = 24 V	– – –	3.5 6.0 11.0	6.0 11.6 20	mA mA mA
TANK Current	V_{CC} = 20 V	−550	−300	−100	μA
Demodulator Charge Current	V_{CC} = 20 V	−60	−30	−10	μA
Output Leakage Current	V_{CC} = 24 V	–	0.01	10	μA
Output V_{SAT}	V_{CC} = 4.0 V, IS = 20 mA V_{CC} = 24 V, IS = 100 mA	– –	60 200	200 500	mV mV
Oscillator Bias	V_{CC} = 20 V	1.1	1.9	2.5	V
Feedback Bias	V_{CC} = 20 V	1.1	1.9	2.5	V
OSC − RF Bias	V_{CC} = 20 V	−250	100	550	mV
Protect Voltage	I_{TANK} = −10 mA	−10	−8.9	−7.0	V
Detect Threshold	–	720	1440	1950	mV
Release Threshold	–	550	1200	1700	mV

PACKAGE PIN DESCRIPTION

PACKAGE PIN #		PIN SYMBOL	FUNCTION
DIP−8 & SO−8	SO−14		
1	1	OSC	Adjustable feedback resistor connected between OSC and RF sets detection range.
2	2	TANK	Connects to parallel tank circuit.
3	3	GND	Ground connection.
4	4	OUT1	Complementary open collector output; when OUT1 = LOW, metal is present.
5	6	OUT2	Complementary open collector output; when OUT2 = HIGH, metal is present.
6	10	DEMOD	Input to comparator controlling OUT1 and OUT2.
7	12	V_{CC}	Supply voltage.
8	13	RF	Adjustable feedback resistor connected between OSC and RF set detection range.
–	5, 7, 8, 9, 11, 14	NC	No connection.

OBSOLETE
THIS DEVICE IS OBSOLETE
PLEASE CONTACT YOUR ON SEMICONDUCTOR
REPRESENTATIVE FOR INFORMATION

TYPICAL PERFORMANCE CHARACTERISTICS

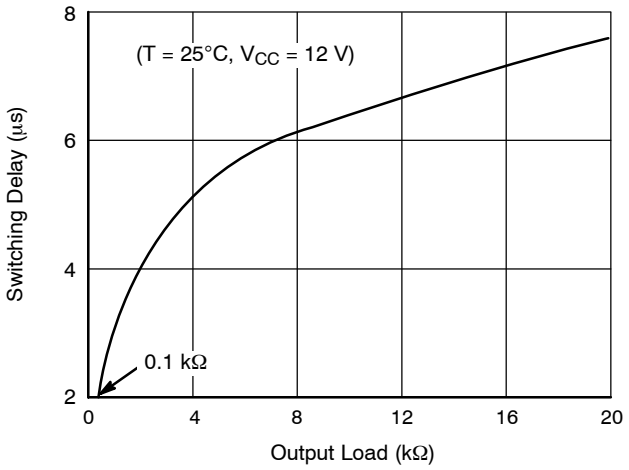

Figure 2. Output Switching Delay vs. Output Load

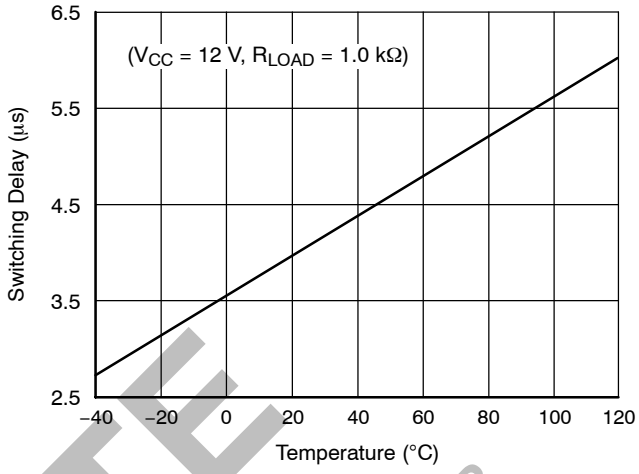

Figure 3. Output Switching Delay vs. Temperature

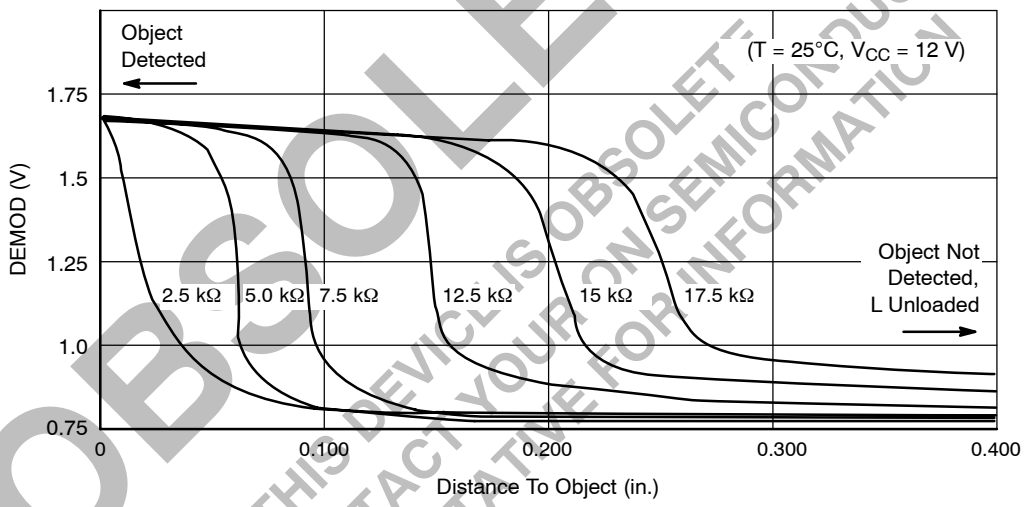

Figure 4. Demodulator Voltage vs. Distance for Different RF

OBSOLETE
THIS DEVICE IS OBSOLETE
PLEASE CONTACT YOUR ONSEMICONDUCTOR
REPRESENTATIVE FOR INFORMATION

PRINCIPLE OF OPERATION

The CS209A is a metal detector circuit which operates on the principle of detecting a reduction in Q of an inductor when it is brought into close proximity of metal. The CS209A contains an oscillator set up by an external parallel resonant tank and a feedback resistor connected between OSC and RF. (See Figure 5.) The impedance of a parallel resonant tank is highest when the frequency of the source driving it is equal to the tank's resonant frequency. In the CS209A the internal oscillator operates close to the resonant frequency of the tank circuit selected. As a metal object is brought close to the inductor, the amplitude of the voltage across the tank gradually begins to drop. When the envelope of the oscillation reaches a certain level, the IC causes the output stages to switch states.

The detection is performed as follows: A capacitor connected to DEMOD is charged via an internal 30 μA current source. This current, however, is diverted away from the capacitor in proportion to the negative bias generated by the tank at TANK. Charge is therefore removed from the capacitor tied to DEMOD on every negative half cycle of the resonant voltage. (See Figure 6) The voltage on the capacitor at DEMOD, a DC voltage with ripple, is then directly compared to an internal 1.44 V reference. When the internal comparator trips it turns on a transistor which places a 23.6 kΩ resistor in parallel to the 4.8 kΩ. The resulting reference then becomes approximately 1.2 V. This hysteresis is necessary for preventing false triggering.

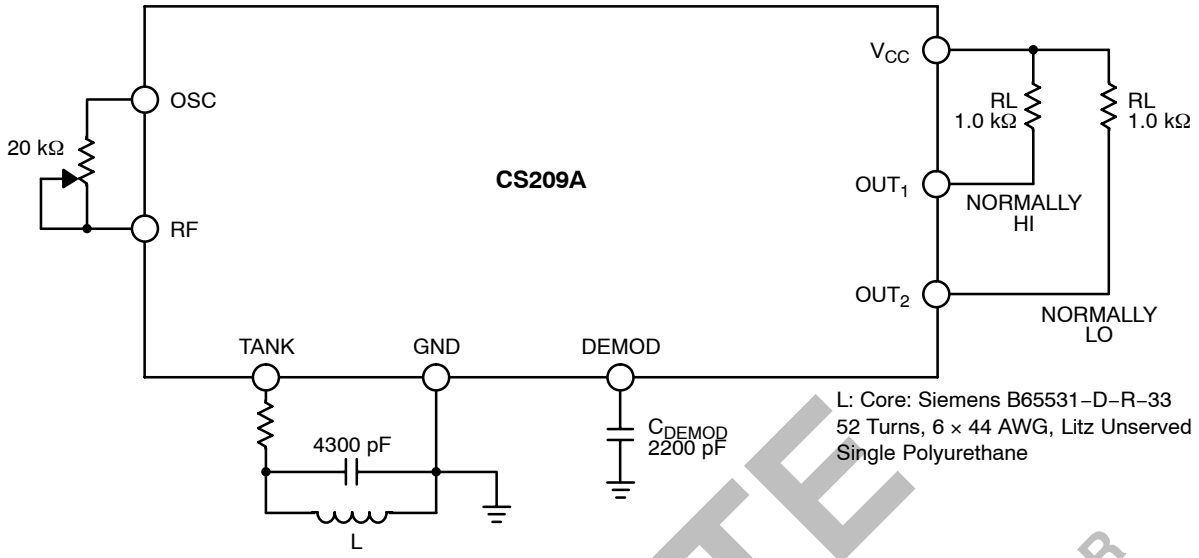

Figure 5. Test and Application Diagram

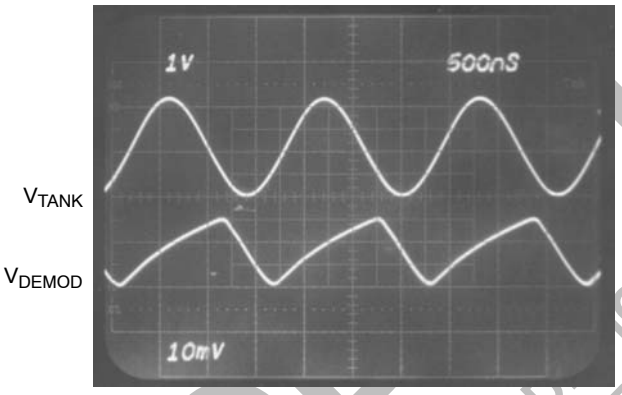

Figure 6. Capacitor Ripple

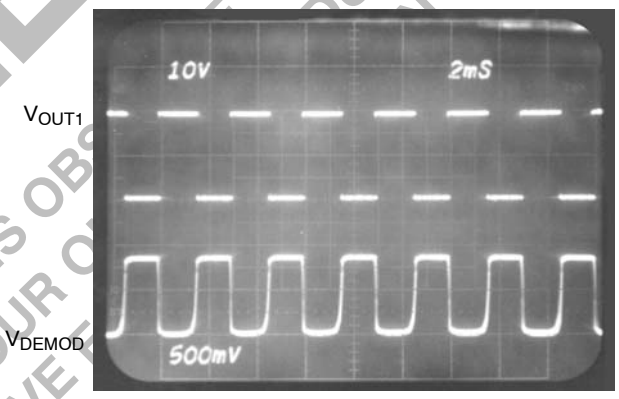

Figure 7. Output Pulse for an 8 Tooth Gear

The feedback potentiometer connected between OSC and RF is adjusted to achieve a certain detection distance range. The larger the resistance the greater the trip−point distance. (See Figure 4.) Note that this is a plot representative of one particular set−up since detection distance is dependent on the Q of the tank. Note also from the graph that the capacitor voltage corresponding to the greatest detection distance has a higher residual voltage when the metal object is well outside the trip point. Higher values of feedback resistance for the same inductor Q will therefore eventually result in a latched−ON condition because the residual voltage will be higher than the comparator's thresholds.

As an example of how to set the detection range, place the metal object at the maximum distance from the inductor the circuit is required to detect, assuming of course the Q of the tank is high enough to allow the object to be within the IC's detection range. Then adjust the potentiometer to obtain a lower resistance while observing one of the CS209A outputs return to its normal state. (See Figure 5.) Readjust the potentiometer slowly toward a higher resistance until the outputs have switched to their tripped condition. Remove the metal and confirm that the outputs switch back to their normal state. Typically the maximum distance range the circuit is capable of detecting is around 0.3 inch. The higher the Q, the higher the detection distance.

OBSOLETE
THIS DEVICE IS OBSOLETE
PLEASE CONTACT YOUR ON SEMICONDUCTOR
REPRESENTATIVE FOR ALTERNATIVES

For this application it is recommended to use a core which concentrates the magnetic field in only one direction. This is accomplished very well with a pot core half. The next step is to select a core material with low loss factor (inverse of Q). The loss factor can be represented by a resistance in series with the inductor which arises from core losses and is a function of frequency.

The final step in obtaining a high Q inductor is the selection of wire size. The higher the frequency the faster the decrease in current density towards the center of the wire. Thus most of the current flow is concentrated on the surface of the wire resulting in a high AC resistance. LITZ wire is recommended for this application. Considering the many factors involved, it is also recommended to operate at a resonant frequency between 200 and 700 kHz. The formula commonly used to determine the Q for parallel resonant circuits is:

$$Q_P \cong \frac{R}{2\pi f_R L}$$

where R is the effective resistance of the tank. The resistance component of the inductor consists primarily of core losses and “skin effect” or AC resistance.

The resonant capacitor should be selected to resonate with the inductor within the frequency range recommended in order to yield the highest Q. The capacitor type should be selected to have low ESR: multilayer ceramic for example.

Detection distances vary for different metals. Following are different detection distances for some selected metals and metal objects relative to one particular circuit set−up:

Commonly Encountered Metals

Stainless Steel	0.101″
Carbon Steel	0.125″
Copper	0.044″
Aluminum	0.053″
Brass	0.052″

Coins

US Quarter	0.055″
Canadian Quarter	0.113″
1 German Mark	0.090″
1 Pound Sterling	0.080″
100 Japanese Yen	0.093″
100 Italian Lira	0.133″

Other

12 oz. soda can	0.087″

Note that the above is only a comparison among different metals and no attempt was made to achieve the greatest detection distance.

A different type of application involves, for example, detecting the teeth of a rotating gear. For these applications the capacitor on DEMOD should not be selected too small (not below 1000 pF) where the ripple becomes too large and not too large (not greater than 0.01 μF) that the response time is too slow. Figure 6 for example shows the capacitor ripple only and Figure 7 shows the entire capacitor voltage and the output pulses for an 8−tooth gear rotating at about 2400 rpm using a 2200 pF capacitor on the DEMOD pin.

Because the output stages go into hard saturation, a time interval is required to remove the stored base charge resulting in both outputs being low for approximately 3.0 μs. (See Figure 3.)

OBSOLETE
THIS DEVICE IS OBSOLETE
PLEASE CONTACT YOUR ON SEMICONDUCTOR
REPRESENTATIVE FOR INFORMATION

PACKAGE DIMENSIONS

DIP−8
N SUFFIX
CASE 626−05
ISSUE L

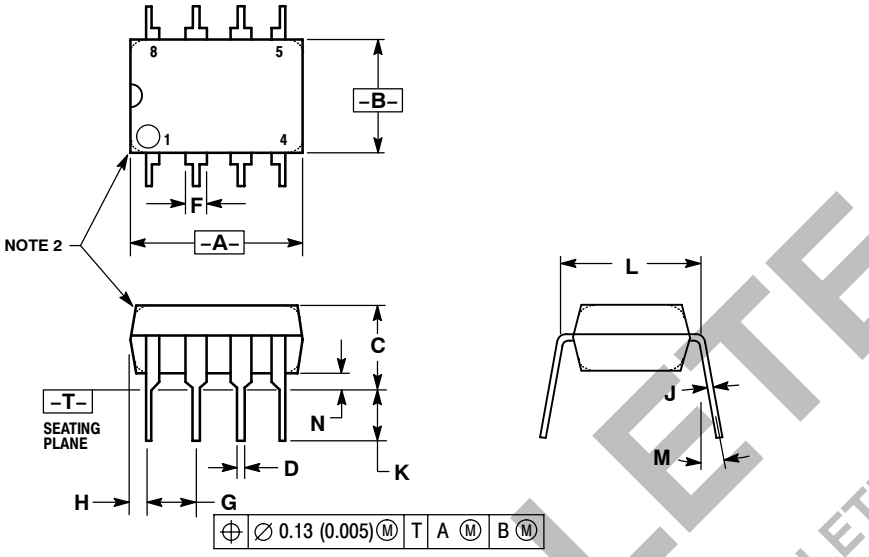

NOTES:
1. DIMENSION L TO CENTER OF LEAD WHEN FORMED PARALLEL.
2. PACKAGE CONTOUR OPTIONAL (ROUND OR SQUARE CORNERS).
3. DIMENSIONING AND TOLERANCING PER ANSI Y14.5M, 1982.

	MILLIMETERS		INCHES	
DIM	MIN	MAX	MIN	MAX
A	9.40	10.16	0.370	0.400
B	6.10	6.60	0.240	0.260
C	3.94	4.45	0.155	0.175
D	0.38	0.51	0.015	0.020
F	1.02	1.78	0.040	0.070
G	2.54 BSC		0.100 BSC	
H	0.76	1.27	0.030	0.050
J	0.20	0.30	0.008	0.012
K	2.92	3.43	0.115	0.135
L	7.62 BSC		0.300 BSC	
M	---	10°	---	10°
N	0.76	1.01	0.030	0.040

OBSOLETE
THIS DEVICE IS OBSOLETE
PLEASE CONTACT YOUR ON SEMICONDUCTOR
REPRESENTATIVE FOR INFORMATION

SO−8
D SUFFIX
CASE 751−07
ISSUE W

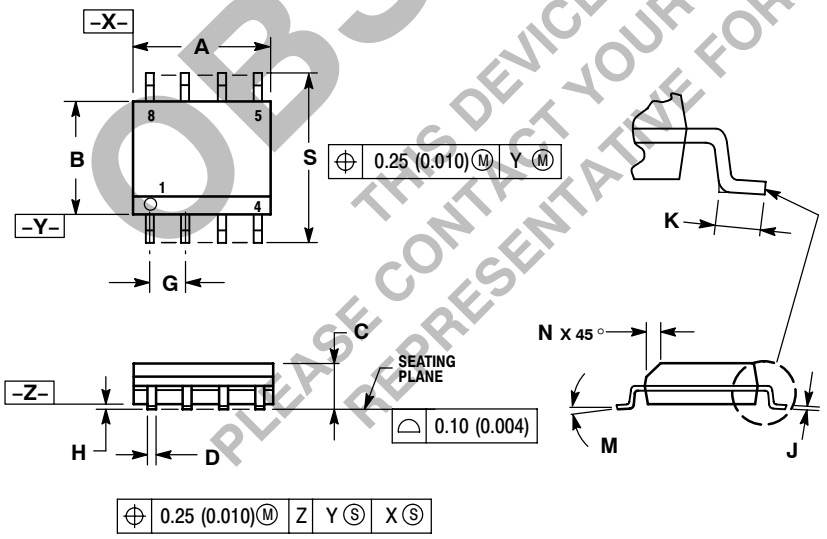

NOTES:
1. DIMENSIONING AND TOLERANCING PER ANSI Y14.5M, 1982.
2. CONTROLLING DIMENSION: MILLIMETER.
3. DIMENSION A AND B DO NOT INCLUDE MOLD PROTRUSION.
4. MAXIMUM MOLD PROTRUSION 0.15 (0.006) PER SIDE.
5. DIMENSION D DOES NOT INCLUDE DAMBAR PROTRUSION. ALLOWABLE DAMBAR PROTRUSION SHALL BE 0.127 (0.005) TOTAL IN EXCESS OF THE D DIMENSION AT MAXIMUM MATERIAL CONDITION.

	MILLIMETERS		INCHES	
DIM	MIN	MAX	MIN	MAX
A	4.80	5.00	0.189	0.197
B	3.80	4.00	0.150	0.157
C	1.35	1.75	0.053	0.069
D	0.33	0.51	0.013	0.020
G	1.27 BSC		0.050 BSC	
H	0.10	0.25	0.004	0.010
J	0.19	0.25	0.007	0.010
K	0.40	1.27	0.016	0.050
M	0°	8°	0°	8°
N	0.25	0.50	0.010	0.020
S	5.80	6.20	0.228	0.244

SO−14
D SUFFIX
CASE 751A−03
ISSUE F

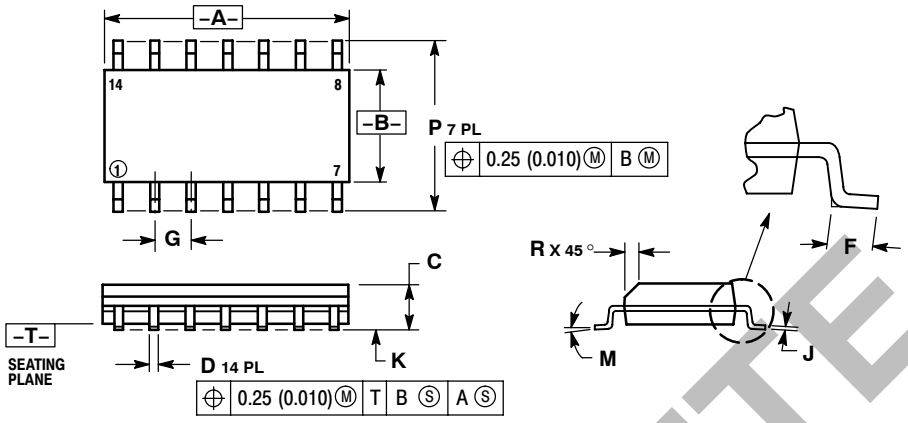

NOTES:
1. DIMENSIONING AND TOLERANCING PER ANSI Y14.5M, 1982.
2. CONTROLLING DIMENSION: MILLIMETER.
3. DIMENSIONS A AND B DO NOT INCLUDE MOLD PROTRUSION.
4. MAXIMUM MOLD PROTRUSION 0.15 (0.006) PER SIDE.
5. DIMENSION D DOES NOT INCLUDE DAMBAR PROTRUSION. ALLOWABLE DAMBAR PROTRUSION SHALL BE 0.127 (0.005) TOTAL IN EXCESS OF THE D DIMENSION AT MAXIMUM MATERIAL CONDITION.

	MILLIMETERS		INCHES	
DIM	MIN	MAX	MIN	MAX
A	8.55	8.75	0.337	0.344
B	3.80	4.00	0.150	0.157
C	1.35	1.75	0.054	0.068
D	0.35	0.49	0.014	0.019
F	0.40	1.25	0.016	0.049
G	1.27 BSC		0.050 BSC	
J	0.19	0.25	0.008	0.009
K	0.10	0.25	0.004	0.009
M	0 °	7°	0 °	7°
P	5.80	6.20	0.228	0.244
R	0.25	0.50	0.010	0.019

PACKAGE THERMAL DATA

Parameter		DIP−8	SO−8	SO−14	Unit
$R_{\Theta JC}$	Typical	52	45	30	°C/W
$R_{\Theta JA}$	Typical	100	165	125	°C/W

OBSOLETE
THIS DEVICE IS OBSOLETE
PLEASE CONTACT YOUR ON SEMICONDUCTOR
REPRESENTATIVE FOR INFORMATION

ON Semiconductor and ON are registered trademarks of Semiconductor Components Industries, LLC (SCILLC). SCILLC reserves the right to make changes without further notice to any products herein. SCILLC makes no warranty, representation or guarantee regarding the suitability of its products for any particular purpose, nor does SCILLC assume any liability arising out of the application or use of any product or circuit, and specifically disclaims any and all liability, including without limitation special, consequential or incidental damages. “Typical” parameters which may be provided in SCILLC data sheets and/or specifications can and do vary in different applications and actual performance may vary over time. All operating parameters, including “Typicals” must be validated for each customer application by customer’s technical experts. SCILLC does not convey any license under its patent rights nor the rights of others. SCILLC products are not designed, intended, or authorized for use as components in systems intended for surgical implant into the body, or other applications intended to support or sustain life, or for any other application in which the failure of the SCILLC product could create a situation where personal injury or death may occur. Should Buyer purchase or use SCILLC products for any such unintended or unauthorized application, Buyer shall indemnify and hold SCILLC and its officers, employees, subsidiaries, affiliates, and distributors harmless against all claims, costs, damages, and expenses, and reasonable attorney fees arising out of, directly or indirectly, any claim of personal injury or death associated with such unintended or unauthorized use, even if such claim alleges that SCILLC was negligent regarding the design or manufacture of the part. SCILLC is an Equal Opportunity/Affirmative Action Employer. This literature is subject to all applicable copyright laws and is not for resale in any manner.

PUBLICATION ORDERING INFORMATION

LITERATURE FULFILLMENT:
Literature Distribution Center for ON Semiconductor
P.O. Box 5163, Denver, Colorado 80217 USA
Phone: 303−675−2175 or 800−344−3860 Toll Free USA/Canada
Fax: 303−675−2176 or 800−344−3867 Toll Free USA/Canada
Email: orderlit@onsemi.com

N. American Technical Support: 800−282−9855 Toll Free USA/Canada
Europe, Middle East and Africa Technical Support:
Phone: 421 33 790 2910
Japan Customer Focus Center
Phone: 81−3−5773−3850

ON Semiconductor Website: **www.onsemi.com**

Order Literature: http://www.onsemi.com/orderlit

For additional information, please contact your local Sales Representative

Мы молодая и активно развивающаяся компания в области поставок электронных компонентов. Мы поставляем электронные компоненты отечественного и импортного производства напрямую от производителей и с крупнейших складов мира.

Благодаря сотрудничеству с мировыми поставщиками мы осуществляем комплексные и плановые поставки широчайшего спектра электронных компонентов.

Собственная эффективная логистика и склад в обеспечивает надежную поставку продукции в точно указанные сроки по всей России.

Мы осуществляем техническую поддержку нашим клиентам и предпродажную проверку качества продукции. На все поставляемые продукты мы предоставляем гарантию .

Осуществляем поставки продукции под контролем ВП МО РФ на предприятия военно-промышленного комплекса России , а также работаем в рамках 275 ФЗ с открытием отдельных счетов в уполномоченном банке. Система менеджмента качества компании соответствует требованиям ГОСТ ISO 9001.

Минимальные сроки поставки, гибкие цены, неограниченный ассортимент и индивидуальный подход к клиентам являются основой для выстраивания долгосрочного и эффективного сотрудничества с предприятиями радиоэлектронной промышленности, предприятиями ВПК и научно-исследовательскими институтами России.

С нами вы становитесь еще успешнее!

Наши контакты:

Телефон: +7 812 627 14 35

Электронная почта: sales@st-electron.ru

Адрес: 198099, Санкт-Петербург, Промышленная ул, дом № 19, литера Н, помещение 100-Н Офис 331