intel®

PRELIMINARY

T-49-19-07

MCS®-51
8-BIT CONTROL-ORIENTED MICROCOMPUTERS
8031/8051
8031AH/8051AH
8032AH/8052AH
8751H/8751H-8

- High Performance HMOS Process
- Internal Timers/Event Counters
- 2-Level Interrupt Priority Structure
- 32 I/O Lines (Four 8-Bit Ports)
- 64K Program Memory Space
- Security Feature Protects EPROM Parts Against Software Piracy
- Boolean Processor
- Bit-Addressable RAM
- Programmable Full Duplex Serial Channel
- 111 Instructions (64 Single-Cycle)
- 64K Data Memory Space

The MCS®-51 products are optimized for control applications. Byte-processing and numerical operations on small data structures are facilitated by a variety of fast addressing modes for accessing the internal RAM. The instruction set provides a convenient menu of 8-bit arithmetic instructions, including multiply and divide instructions. Extensive on-chip support is provided for one-bit variables as a separate data type, allowing direct bit manipulation and testing in control and logic systems that require Boolean processing.

The 8051 is the original member of the MCS-51 family. The 8051AH is identical to the 8051, but it is fabricated with HMOS II technology.

The 8751H is an EPROM version of the 8051AH; that is, the on-chip Program Memory can be electrically programmed, and can be erased by exposure to ultraviolet light. It is fully compatible with its predecessor, the 8751-8, but incorporates two new features: a Program Memory Security bit that can be used to protect the EPROM against unauthorized read-out, and a programmable baud rate modification bit (SMOD). The 8751H-8 is identical to the 8751H but only operates up to 8 MHz.

The 8052AH is an enhanced version of the 8051AH. It is backwards compatible with the 8051AH and is fabricated with HMOS II technology. The 8052AH enhancements are listed in the table below. Also refer to this table for the ROM, ROMless, and EPROM versions of each product.

Device	Internal Memory		Timers/ Event Counters	Interrupts
	Program	Data		
8052AH	8K x 8 ROM	256 x 8 RAM	3 x 16-Bit	6
8051AH	4K x 8 ROM	128 x 8 RAM	2 x 16-Bit	5
8051	4K x 8 ROM	128 x 8 RAM	2 x 16-Bit	5
8032AH	none	256 x 8 RAM	3 x 16-Bit	6
8031AH	none	128 x 8 RAM	2 x 16-Bit	5
8031	none	128 x 8 RAM	2 x 16-Bit	5
8751H	4K x 8 EPROM	128 x 8 RAM	2 x 16-Bit	5
8751H-8	4K x 8 EPROM	128 x 8 RAM	2 x 16-Bit	5

October 1988
Order Number: 270048-004

T-49-19-07

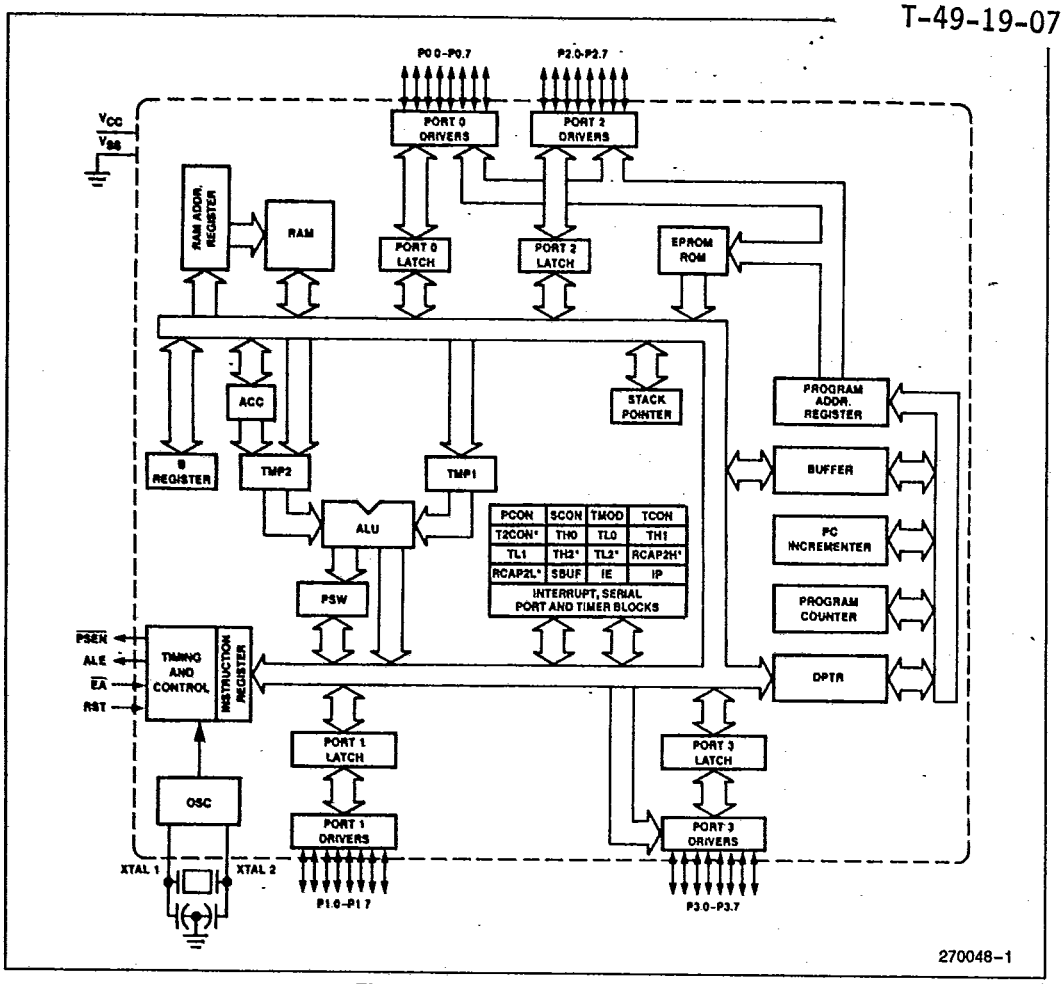

Figure 1. MCS®-51 Block Diagram

PACKAGES

Part	Prefix	Package Type
8051AH/ 8031AH	P	40-Pin Plastic DIP
	D	40-Pin CERDIP
	N	44-Pin PLCC
8052AH/ 8032AH	P	40-Pin Plastic DIP
	D	40-Pin CERDIP
	N	44-Pin PLCC
8751H/ 8751H-8	D	40-Pin CERDIP
	R	44-Pin LCC

PIN DESCRIPTIONS

V_{CC}: Supply voltage.

V_{SS}: Circuit ground.

Port 0: Port 0 is an 8-bit open drain bidirectional I/O port. As an output port each pin can sink 8 LS TTL inputs.

Port 0 pins that have 1s written to them float, and in that state can be used as high-impedance inputs.

Port 0 is also the multiplexed low-order address and data bus during accesses to external Program and Data Memory. In this application it uses strong internal pullups when emitting 1s and can source and sink 8 LS TTL inputs.

Port 0 also receives the code bytes during programming of the EPROM parts, and outputs the code bytes during program verification of the ROM and EPROM parts. External pullups are required during program verification.

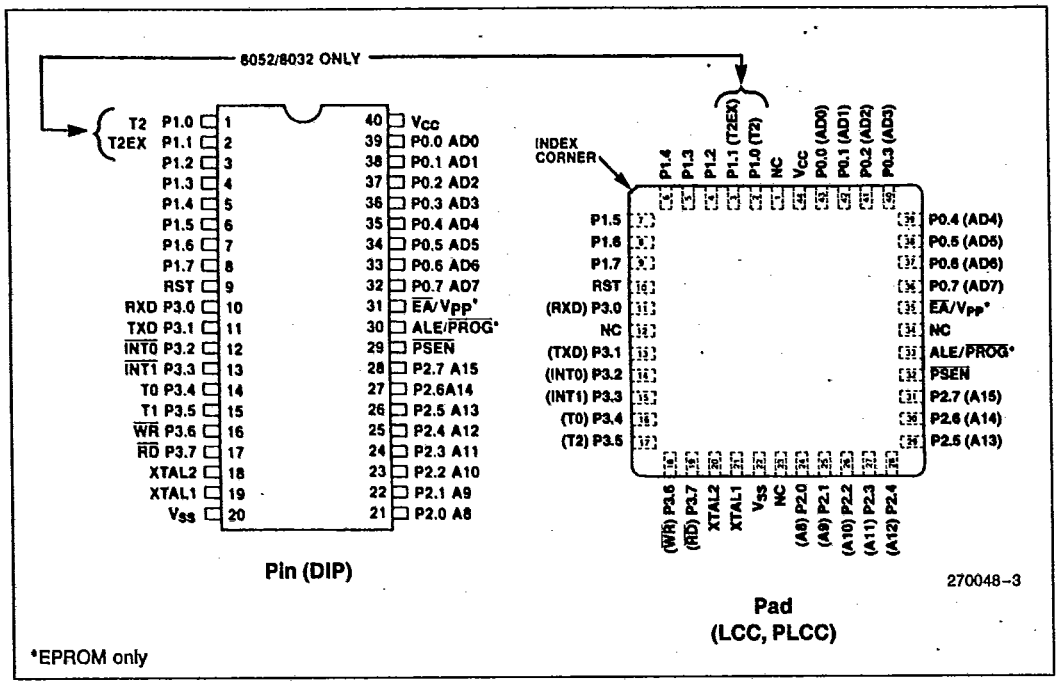

Figure 2. MCS®-51 Connections

Port 1: Port 1 is an 8-bit bidirectional I/O port with internal pullups. The Port 1 output buffers can sink/source 4 LS TTL inputs. Port 1 pins that have 1s written to them are pulled high by the internal pullups, and in that state can be used as inputs. As inputs, Port 1 pins that are externally being pulled low will source current (I_{IL} on the data sheet) because of the internal pullups.

Port 1 also receives the low-order address bytes during programming of the EPROM parts and during program verification of the ROM and EPROM parts.

In the 8032AH and 8052AH, Port 1 pins P1.0 and P1.1 also serve the T2 and T2EX functions, respectively.

Port 2: Port 2 is an 8-bit bidirectional I/O port with internal pullups. The Port 2 output buffers can sink/source 4 LS TTL inputs. Port 2 pins that have 1s written to them are pulled high by the internal pullups, and in that state can be used as inputs. As inputs, Port 2 pins that are externally being pulled low will source current (I_{IL} on the data sheet) because of the internal pullups.

Port 2 emits the high-order address byte during fetches from external Program Memory and during accesses to external Data Memory that use 16-bit addresses (MOVX @DPTR). In this application it uses strong internal pullups when emitting 1s. During accesses to external Data Memory that use 8-bit addresses (MOVX @Ri), Port 2 emits the contents of the P2 Special Function Register.

Port 2 also receives the high-order address bits during programming of the EPROM parts and during program verification of the ROM and EPROM parts.

Port 3: Port 3 is an 8-bit bidirectional I/O port with internal pullups. The Port 3 output buffers can sink/source 4 LS TTL inputs. Port 3 pins that have 1s written to them are pulled high by the internal pullups, and in that state can be used as inputs. As inputs, Port 3 pins that are externally being pulled low will source current (I_{IL} on the data sheet) because of the pullups.

Port 3 also serves the functions of various special features of the MCS-51 Family, as listed below:

Port Pin	Alternative Function
P3.0	RXD (serial input port)
P3.1	TXD (serial output port)
P3.2	$\overline{INT0}$ (external interrupt 0)
P3.3	$\overline{INT1}$ (external interrupt 1)
P3.4	T0 (Timer 0 external input)
P3.5	T1 (Timer 1 external input)
P3.6	$\overline{WR}$ (external data memory write strobe)
P3.7	$\overline{RD}$ (external data memory read strobe)

RST: Reset input. A high on this pin for two machine cycles while the oscillator is running resets the device.

ALE/$\overline{PROG}$: Address Latch Enable output pulse for latching the low byte of the address during accesses to external memory. This pin is also the program pulse input ($\overline{PROG}$) during programming of the EPROM parts.

In normal operation ALE is emitted at a constant rate of 1/6 the oscillator frequency, and may be used for external timing or clocking purposes. Note, however, that one ALE pulse is skipped during each access to external Data Memory.

$\overline{PSEN}$: Program Store Enable is the read strobe to external Program Memory.

When the device is executing code from external Program Memory, $\overline{PSEN}$ is activated twice each machine cycle, except that two $\overline{PSEN}$ activations are skipped during each access to external Data Memory.

$\overline{EA}$/V_{PP}: External Access enable $\overline{EA}$ must be strapped to V_{SS} in order to enable any MCS-51 device to fetch code from external Program memory locations starting at 0000H up to FFFFH. $\overline{EA}$ must be strapped to V_{CC} for internal program execution.

Note, however, that if the Security Bit in the EPROM devices is programmed, the device will not fetch code from any location in external Program Memory.

This pin also receives the 21V programming supply voltage (VPP) during programming of the EPROM parts.

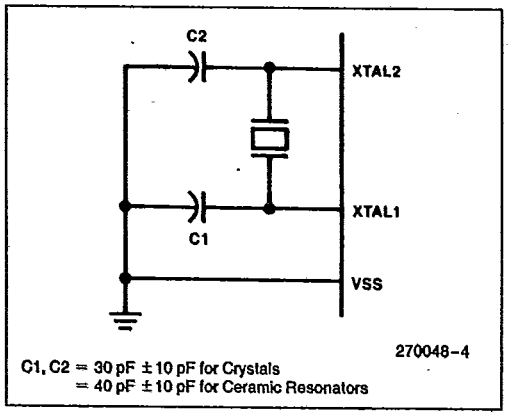

Figure 3. Oscillator Connections

XTAL1: Input to the inverting oscillator amplifier.

XTAL2: Output from the inverting oscillator amplifier.

OSCILLATOR CHARACTERISTICS

XTAL1 and XTAL2 are the input and output, respectively, of an inverting amplifier which can be configured for use as an on-chip oscillator, as shown in Figure 3. Either a quartz crystal or ceramic resonator may be used. More detailed information concerning the use of the on-chip oscillator is available in Application Note AP-155, "Oscillators for Microcontrollers."

To drive the device from an external clock source, XTAL1 should be grounded, while XTAL2 is driven, as shown in Figure 4. There are no requirements on the duty cycle of the external clock signal, since the input to the internal clocking circuitry is through a divide-by-two flip-flop, but minimum and maximum high and low times specified on the Data Sheet must be observed.

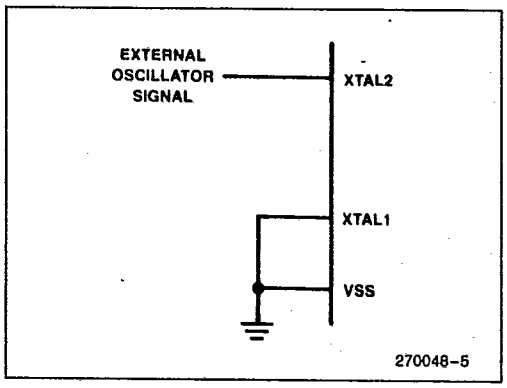

Figure 4. External Drive Configuration

DESIGN CONSIDERATIONS

If an 8751BH or 8752BH may replace an 8751H in a future design, the user should carefully compare both data sheets for DC or AC Characteristic differences. Note that the V_{IH} and I_{IH} specifications for the $\overline{EA}$ pin differ significantly between the devices.

Exposure to light when the EPROM device is in operation may cause logic errors. For this reason, it is suggested that an opaque label be placed over the window when the die is exposed to ambient light.

ABSOLUTE MAXIMUM RATINGS*

Ambient Temperature Under Bias .....0°C to 70°C
Storage Temperature .....−65°C to +150°C
Voltage on $\overline{EA}/V_{PP}$ Pin to V_{SS} ...−0.5V to +21.5V
Voltage on Any Other Pin to V_{SS} ....−0.5V to +7V
Power Dissipation.....1.5W

**Notice: Stresses above those listed under "Absolute Maximum Ratings" may cause permanent damage to the device. This is a stress rating only and functional operation of the device at these or any other conditions above those indicated in the operational sections of this specification is not implied. Exposure to absolute maximum rating conditions for extended periods may affect device reliability.*

D.C. CHARACTERISTICS T_A = 0°C to 70°C; V_{CC} = 5V ±10%; V_{SS} = 0V

Symbol	Parameter		Min	Max	Units	Test Conditions
V_{IL}	Input Low Voltage (Except $\overline{EA}$ Pin of 8751H & 8751H-8)		−0.5	0.8	V	
V_{IL1}	Input Low Voltage to $\overline{EA}$ Pin of 8751H & 8751H-8		0	0.7	V	
V_{IH}	Input High Voltage (Except XTAL2, RST)		2.0	V_{CC} + 0.5	V	
V_{IH1}	Input High Voltage to XTAL2, RST		2.5	V_{CC} + 0.5	V	XTAL1 = V_{SS}
V_{OL}	Output Low Voltage (Ports 1, 2, 3)*			0.45	V	I_{OL} = 1.6 mA
V_{OL1}	Output Low Voltage (Port 0, ALE, $\overline{PSEN}$)*					
		8751H, 8751H-8		0.60 0.45	V V	I_{OL} = 3.2 mA I_{OL} = 2.4 mA
		All Others		0.45	V	I_{OL} = 3.2 mA
V_{OH}	Output High Voltage (Ports 1, 2, 3, ALE, $\overline{PSEN}$)		2.4		V	I_{OH} = −80 μA
V_{OH1}	Output High Voltage (Port 0 in External Bus Mode)		2.4		V	I_{OH} = −400 μA
I_{IL}	Logical 0 Input Current (Ports 1, 2, 3, RST) 8032AH, 8052AH All Others			−800 −500	μA μA	V_{IN} = 0.45V V_{IN} = 0.45V
I_{IL1}	Logical 0 Input Current to $\overline{EA}$ Pin of 8751H & 8751H-8 Only			−15	mA	V_{IN} = 0.45V
I_{IL2}	Logical 0 Input Current (XTAL2)			−3.2	mA	V_{IN} = 0.45V
I_{LI}	Input Leakage Current (Port 0) 8751H & 8751H-8 All Others			 ±100 ±10	 μA μA	 0.45 ≤ V_{IN} ≤ V_{CC} 0.45 ≤ V_{IN} ≤ V_{CC}
I_{IH}	Logical 1 Input Current to $\overline{EA}$ Pin of 8751H & 8751H-8			500	μA	V_{IN} = 2.4V
I_{IH1}	Input Current to RST to Activate Reset			500	μA	V_{IN} < (V_{CC} − 1.5V)
I_{CC}	Power Supply Current: 8031/8051 8031AH/8051AH 8032AH/8052AH 8751H/8751H-8			 160 125 175 250	 mA mA mA mA	 All Outputs Disconnected; $\overline{EA}$ = V_{CC}
C_{IO}	Pin Capacitance			10	pF	Test freq = 1 MHz

***NOTE:**
Capacitive loading on Ports 0 and 2 may cause spurious noise pulses to be superimposed on the V_{OL}s of ALE and Ports 1 and 3. The noise is due to external bus capacitance discharging into the Port 0 and Port 2 pins when these pins make 1-to-0 transitions during bus operations. In the worst cases (capacitive loading > 100 pF), the noise pulse on the ALE line may exceed 0.8V. In such cases it may be desirable to qualify ALE with a Schmitt Trigger, or use an address latch with a Schmitt Trigger STROBE input.

A.C. CHARACTERISTICS

T_A = 0°C to +70°C; V_{CC} = 5V ±10%; V_{SS} = 0V;
Load Capacitance for Port 0, ALE, and PSEN = 100 pF;
Load Capacitance for All Other Outputs = 80 pF

Symbol	Parameter	12 MHz Oscillator		Variable Oscillator		Units
		Min	Max	Min	Max	
1/TCLCL	Oscillator Frequency			3.5	12.0	MHz
TLHLL	ALE Pulse Width	127		2TCLCL−40		ns
TAVLL	Address Valid to ALE Low	43		TCLCL−40		ns
TLLAX	Address Hold after ALE Low	48		TCLCL−35		ns
TLLIV	ALE Low to Valid Instr In 8751H All Others		 183 233		 4TCLCL−150 4TCLCL−100	 ns ns
TLLPL	ALE Low to $\overline{PSEN}$ Low	58		TCLCL−25		ns
TPLPH	$\overline{PSEN}$ Pulse Width 8751H All Others	 190 215		 3TCLCL−60 3TCLCL−35		 ns ns
TPLIV	$\overline{PSEN}$ Low to Valid Instr In 8751H All Others		 100 125		 3TCLCL−150 3TCLCL−125	 ns ns
TPXIX	Input Instr Hold after $\overline{PSEN}$	0		0		ns
TPXIZ	Input Instr Float after $\overline{PSEN}$		63		TCLCL−20	ns
TPXAV	$\overline{PSEN}$ to Address Valid	75		TCLCL−8		ns
TAVIV	Address to Valid Instr In 8751H All Others		 267 302		 5TCLCL−150 5TCLCL−115	 ns ns
TPLAZ	$\overline{PSEN}$ Low to Address Float		20		20	ns
TRLRH	$\overline{RD}$ Pulse Width	400		6TCLCL−100		ns
TWLWH	$\overline{WR}$ Pulse Width	400		6TCLCL−100		ns
TRLDV	$\overline{RD}$ Low to Valid Data In		252		5TCLCL−165	ns
TRHDX	Data Hold after $\overline{RD}$	0		0		ns
TRHDZ	Data Float after $\overline{RD}$		97		2TCLCL−70	ns
TLLDV	ALE Low to Valid Data In		517		8TCLCL−150	ns
TAVDV	Address to Valid Data In		585		9TCLCL−165	ns
TLLWL	ALE Low to $\overline{RD}$ or $\overline{WR}$ Low	200	300	3TCLCL−50	3TCLCL+50	ns
TAVWL	Address to $\overline{RD}$ or $\overline{WR}$ Low	203		4TCLCL−130		ns
TQVWX	Data Valid to $\overline{WR}$ Transition 8751H All Others	 13 23		 TCLCL−70 TCLCL−60		 ns ns
TQVWH	Data Valid to $\overline{WR}$ High	433		7TCLCL−150		ns
TWHQX	Data Hold after $\overline{WR}$	33		TCLCL−50		ns
TRLAZ	$\overline{RD}$ Low to Address Float		20		20	ns
TWHLH	$\overline{RD}$ or $\overline{WR}$ High to ALE High 8751H All Others	 33 43	 133 123	 TCLCL−50 TCLCL−40	 TCLCL+50 TCLCL+40	 ns ns

NOTE:
*This table does not include the 8751-8 A.C. characteristics (see next page).

This Table is only for the 8751H-8

A.C. CHARACTERISTICS T_A = 0°C to +70°C; V_{CC} = 5V ±10%; V_{SS} = 0V;
Load Capacitance for Port 0, ALE, and PSEN = 100 pF;
Load Capacitance for All Other Outputs = 80 pF

Symbol	Parameter	8 MHz Oscillator		Variable Oscillator		Units
		Min	Max	Min	Max	
1/TCLCL	Oscillator Frequency			3.5	8.0	MHz
TLHLL	ALE Pulse Width	210		2TCLCL−40		ns
TAVLL	Address Valid to ALE Low	85		TCLCL−40		ns
TLLAX	Address Hold after ALE Low	90		TCLCL−35		ns
TLLIV	ALE Low to Valid Instr In		350		4TCLCL−150	ns
TLLPL	ALE Low to $\overline{PSEN}$ Low	100		TCLCL−25		ns
TPLPH	$\overline{PSEN}$ Pulse Width	315		3TCLCL−60		ns
TPLIV	$\overline{PSEN}$ Low to Valid Instr In		225		3TCLCL−150	ns
TPXIX	Input Instr Hold after $\overline{PSEN}$	0		0		ns
TPXIZ	Input Instr Float after $\overline{PSEN}$		105		TCLCL−20	ns
TPXAV	$\overline{PSEN}$ to Address Valid	117		TCLCL−8		ns
TAVIV	Address to Valid Instr In		475		5TCLCL−150	ns
TPLAZ	$\overline{PSEN}$ Low to Address Float		20		20	ns
TRLRH	$\overline{RD}$ Pulse Width	650		6TCLCL−100		ns
TWLWH	$\overline{WR}$ Pulse Width	650		6TCLCL−100		ns
TRLDV	$\overline{RD}$ Low to Valid Data In		460		5TCLCL−165	ns
TRHDX	Data Hold after $\overline{RD}$	0		0		ns
TRHDZ	Data Float after $\overline{RD}$		180		2TCLCL−70	ns
TLLDV	ALE Low to Valid Data In		850		8TCLCL−150	ns
TAVDV	Address to Valid Data In		960		9TCLCL−165	ns
TLLWL	ALE Low to $\overline{RD}$ or $\overline{WR}$ Low	325	425	3TCLCL−50	3TCLCL+50	ns
TAVWL	Address to $\overline{RD}$ or $\overline{WR}$ Low	370		4TCLCL−130		ns
TQVWX	Data Valid to $\overline{WR}$ Transition	55		TCLCL−70		ns
TQVWH	Data Valid to $\overline{WR}$ High	725		7TCLCL−150		ns
TWHQX	Data Hold after $\overline{WR}$	75		TCLCL−50		ns
TRLAZ	$\overline{RD}$ Low to Address Float		20		20	ns
TWHLH	$\overline{RD}$ or $\overline{WR}$ High to ALE High	75	175	TCLCL−50	TCLCL+50	ns

EXTERNAL PROGRAM MEMORY READ CYCLE

T-49-19-07

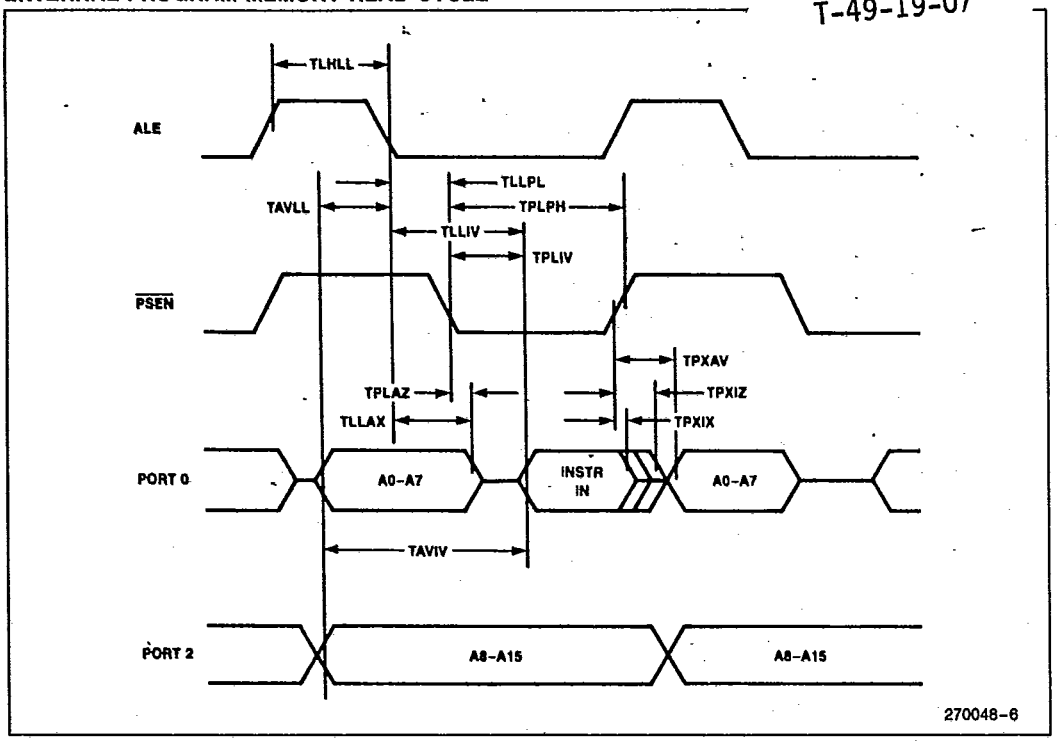

T-49-19-07

EXTERNAL DATA MEMORY READ CYCLE

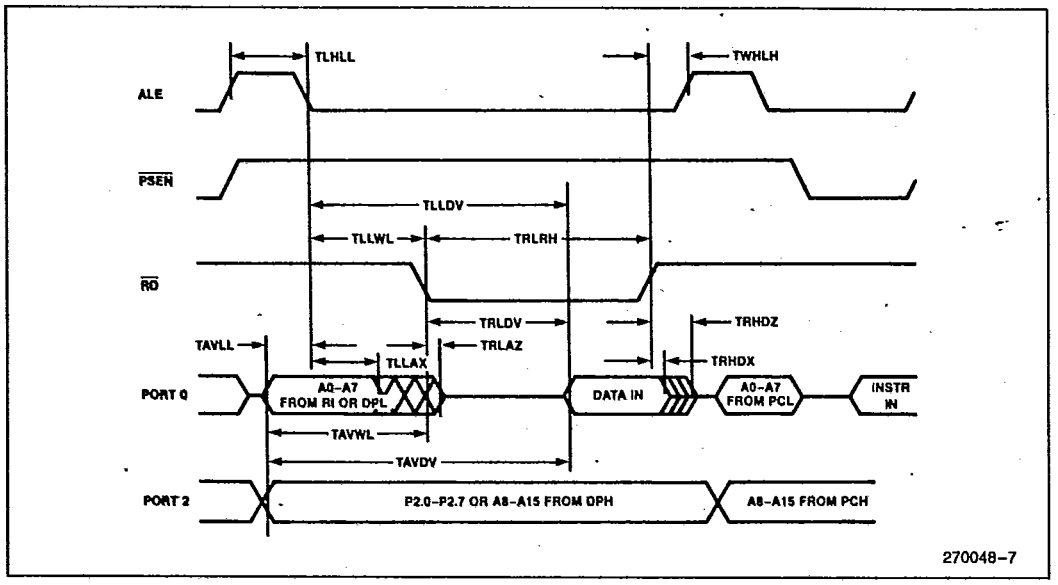

EXTERNAL DATA MEMORY WRITE CYCLE

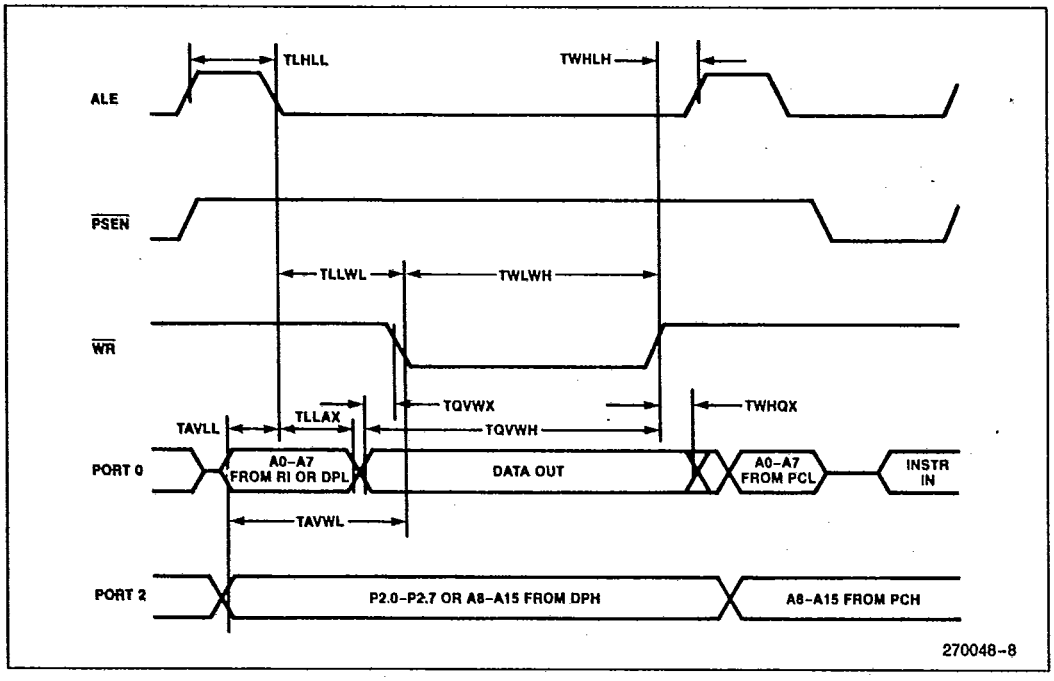

SERIAL PORT TIMING—SHIFT REGISTER MODE

Test Conditions: T_A = 0°C to 70°C; VCC = 5V ±10%; VSS = 0V; Load Capacitance = 80 pF

Symbol	Parameter	12 MHz Oscillator		Variable Oscillator		Units
		Min	Max	Min	Max	
TXLXL	Serial Port Clock Cycle Time	1.0		12TCLCL		μs
TQVXH	Output Data Setup to Clock Rising Edge	700		10TCLCL−133		ns
TXHQX	Output Data Hold after Clock Rising Edge	50		2TCLCL−117		ns
TXHDX	Input Data Hold after Clock Rising Edge	0		0		ns
TXHDV	Clock Rising Edge to Input Data Valid		700		10TCLCL−133	ns

SHIFT REGISTER TIMING WAVEFORMS

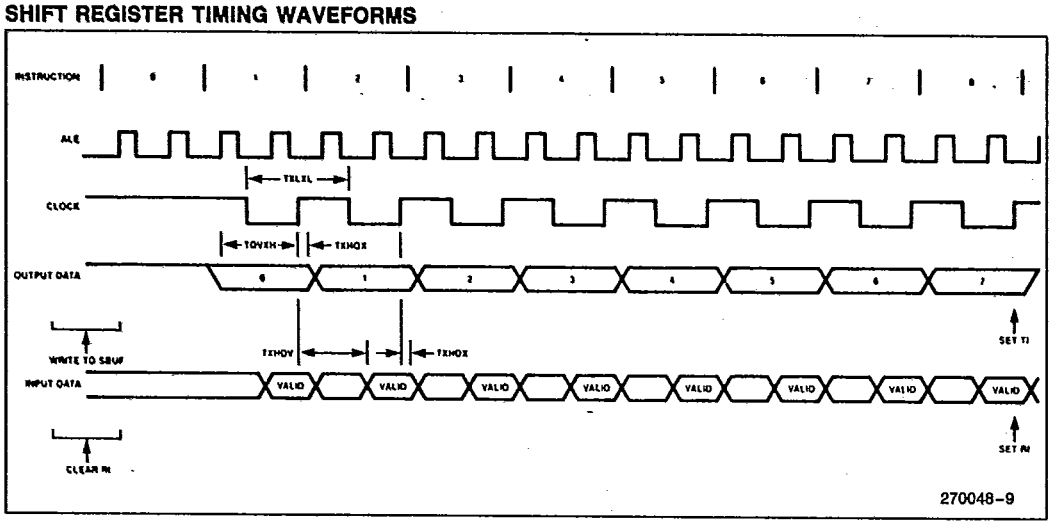

EXTERNAL CLOCK DRIVE

Symbol	Parameter	Min	Max	Units
1/TCLCL	Oscillator Frequency (except 8751H-8) 8751H-8	3.5 3.5	12 8	MHz MHz
TCHCX	High Time	20		ns
TCLCX	Low Time	20		ns
TCLCH	Rise Time		20	ns
TCHCL	Fall Time		20	ns

EXTERNAL CLOCK DRIVE WAVEFORM

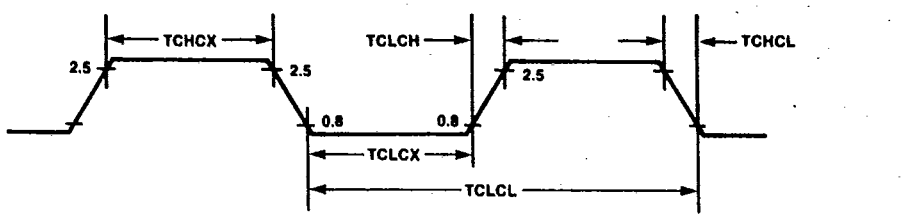

270048-10

A.C. TESTING INPUT, OUTPUT WAVEFORM

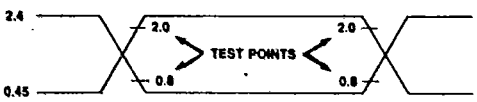

270048-11

A.C. Testing: Inputs are driven at 2.4V for a Logic "1" and 0.45V for a Logic "0". Timing measurements are made at 2.0V for a Logic "1" and 0.8V for a Logic "0".

EPROM CHARACTERISTICS

Table 3. EPROM Programming Modes

Mode	RST	$\overline{PSEN}$	ALE	$\overline{EA}$	P2.7	P2.6	P2.5	P2.4
Program	1	0	0*	VPP	1	0	X	X
Inhibit	1	0	1	X	1	0	X	X
Verify	1	0	1	1	0	0	X	X
Security Set	1	0	0*	VPP	1	1	X	X

NOTE:
"1" = logic high for that pin
"0" = logic low for that pin
"X" = "don't care"
"VPP" = +21V ±0.5V
*ALE is pulsed low for 50 ms.

Programming the EPROM

To be programmed, the part must be running with a 4 to 6 MHz oscillator. (The reason the oscillator needs to be running is that the internal bus is being used to transfer address and program data to appropriate internal registers.) The address of an EPROM location to be programmed is applied to Port 1 and pins P2.0–P2.3 of Port 2, while the code byte to be programmed into that location is applied to Port 0. The other Port 2 pins, and RST, $\overline{PSEN}$, and $\overline{EA}$ should be held at the "Program" levels indicated in Table 3. ALE is **pulsed** low for 50 ms to program the code byte into the addressed EPROM location. The setup is shown in Figure 5.

Normally $\overline{EA}$ is held at a logic high until just before ALE is to be pulsed. Then $\overline{EA}$ is raised to +21V, ALE is pulsed, and then $\overline{EA}$ is returned to a logic high. Waveforms and detailed timing specifications are shown in later sections of this data sheet.

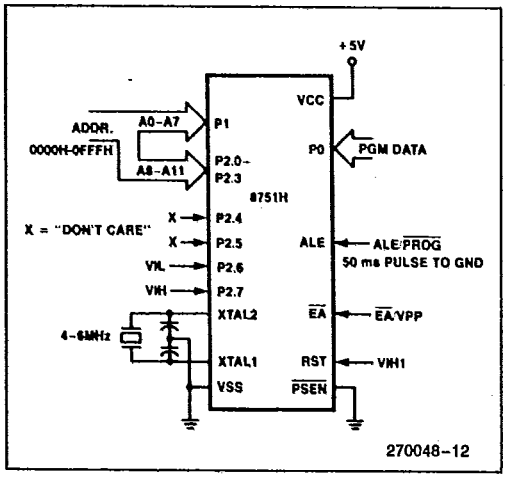

Figure 5. Programming Configuration

Note that the $\overline{EA}$/VPP pin must not be allowed to go above the maximum specified VPP level of 21.5V for any amount of time. Even a narrow glitch above that voltage level can cause permanent damage to the device. The VPP source should be well regulated and free of glitches.

Program Verification

If the Security Bit has not been programmed, the on-chip Program Memory can be read out for verification purposes, if desired, either during or after the programming operation. The address of the Program Memory location to be read is applied to Port 1 and pins P2.0–P2.3. The other pins should be held at the "Verify" levels indicated in Table 3. The contents of the addressed location will come out on Port 0. External pullups are required on Port 0 for this operation.

The setup, which is shown in Figure 6, is the same as for programming the EPROM except that pin P2.7 is held at a logic low, or may be used as an active-low read strobe.

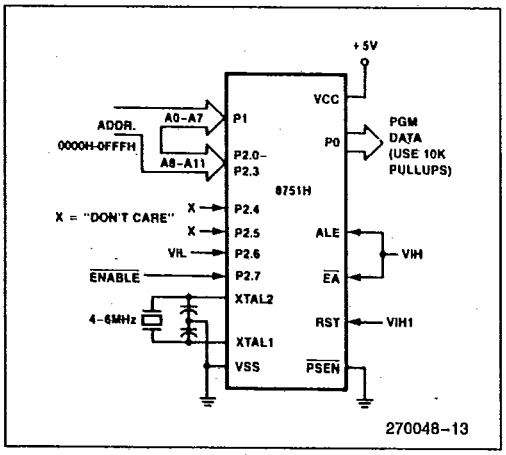

Figure 6. Program Verification

T-49-19-07

EPROM Security

The security feature consists of a "locking" bit which when programmed denies electrical access by any external means to the on-chip Program Memory. The bit is programmed as shown in Figure 7. The setup and procedure are the same as for normal EPROM programming, except that P2.6 is held at a logic high. Port 0, Port 1, and pins P2.0–P2.3 may be in any state. The other pins should be held at the "Security" levels indicated in Table 3.

Once the Security Bit has been programmed, it can be cleared only by full erasure of the Program Memory. While it is programmed, the internal Program Memory can not be read out, the device can not be further programmed, and it **can not execute out of external program memory.** Erasing the EPROM, thus clearing the Security Bit, restores the device's full functionality. It can then be reprogrammed.

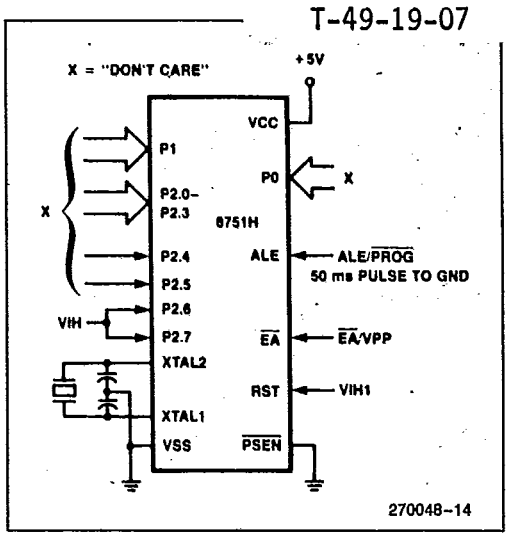

Figure 7. Programming the Security Bit

Erasure Characteristics

Erasure of the EPROM begins to occur when the chip is exposed to light with wavelengths shorter than approximately 4,000 Angstroms. Since sunlight and fluorescent lighting have wavelengths in this range, exposure to these light sources over an extended time (about 1 week in sunlight, or 3 years in room-level fluorescent lighting) could cause inadvertent erasure. If an application subjects the device to this type of exposure, it is suggested that an opaque label be placed over the window.

The recommended erasure procedure is exposure to ultraviolet light (at 2537 Angstroms) to an integrated dose of at least 15 W-sec/cm^2. Exposing the EPROM to an ultraviolet lamp of 12,000 μW/cm^2 rating for 20 to 30 minutes, at a distance of about 1 inch, should be sufficient.

Erasure leaves the array in an all 1s state.

EPROM PROGRAMMING AND VERIFICATION CHARACTERISTICS

T_A = 21°C to 27°C; VCC = 5V ±10%; VSS = 0V

Symbol	Parameter	Min	Max	Units
VPP	Programming Supply Voltage	20.5	21.5	V
IPP	Programming Supply Current		30	mA
1/TCLCL	Oscillator Frequency	4	6	MHz
TAVGL	Address Setup to $\overline{PROG}$ Low	48TCLCL		
TGHAX	Address Hold after $\overline{PROG}$	48TCLCL		
TDVGL	Data Setup to $\overline{PROG}$ Low	48TCLCL		
TGHDX	Data Hold after $\overline{PROG}$	48TCLCL		
TEHSH	P2.7 ($\overline{ENABLE}$) High to VPP	48TCLCL		
TSHGL	VPP Setup to $\overline{PROG}$ Low	10		μs
TGHSL	VPP Hold after $\overline{PROG}$	10		μs
TGLGH	$\overline{PROG}$ Width	45	55	ms
TAVQV	Address to Data Valid		48TCLCL	
TELQV	$\overline{ENABLE}$ Low to Data Valid		48TCLCL	
TEHQZ	Data Float after $\overline{ENABLE}$	0	48TCLCL	

T-49-19-07

EPROM PROGRAMMING AND VERIFICATION WAVEFORMS

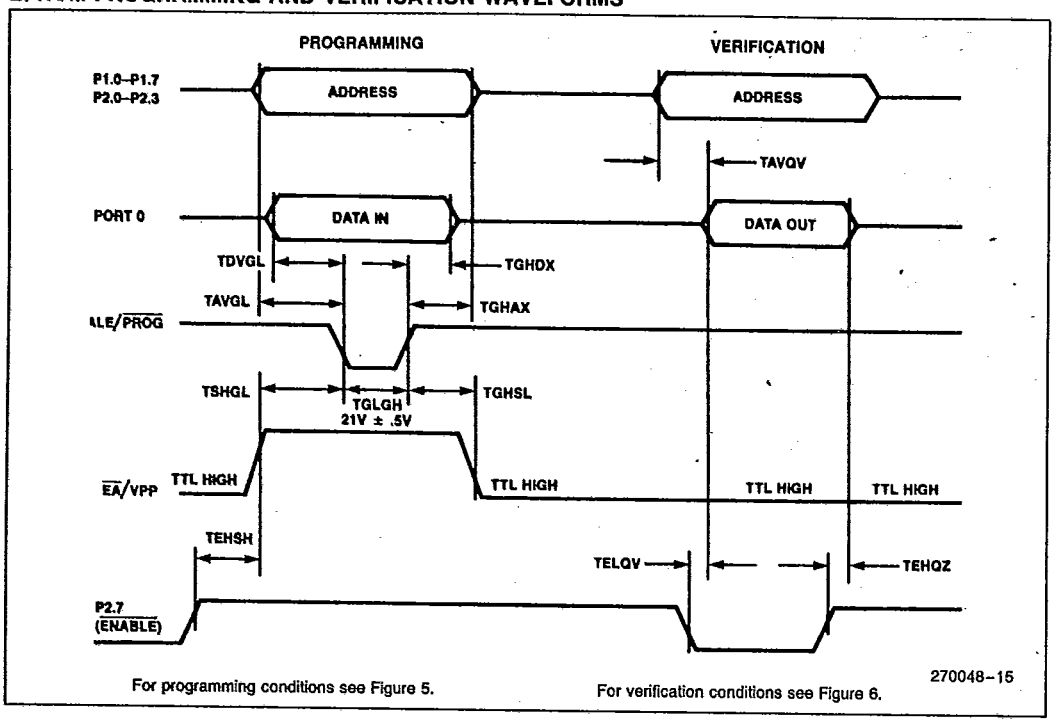

For programming conditions see Figure 5. For verification conditions see Figure 6.

DATA SHEET REVISION SUMMARY

The following are the key differences between this and the -003 version of this data sheet:

1. Introduction was expanded to include product descriptions.
2. Package table was added.
3. Design Considerations added.
4. Test Conditions for I_{IL1} and I_{IH} specifications added to the DC Characteristics.
5. Data Sheet Revision Summary added.

Мы молодая и активно развивающаяся компания в области поставок электронных компонентов. Мы поставляем электронные компоненты отечественного и импортного производства напрямую от производителей и с крупнейших складов мира.

Благодаря сотрудничеству с мировыми поставщиками мы осуществляем комплексные и плановые поставки широчайшего спектра электронных компонентов.

Собственная эффективная логистика и склад в обеспечивает надежную поставку продукции в точно указанные сроки по всей России.

Мы осуществляем техническую поддержку нашим клиентам и предпродажную проверку качества продукции. На все поставляемые продукты мы предоставляем гарантию .

Осуществляем поставки продукции под контролем ВП МО РФ на предприятия военно-промышленного комплекса России , а также работаем в рамках 275 ФЗ с открытием отдельных счетов в уполномоченном банке. Система менеджмента качества компании соответствует требованиям ГОСТ ISO 9001.

Минимальные сроки поставки, гибкие цены, неограниченный ассортимент и индивидуальный подход к клиентам являются основой для выстраивания долгосрочного и эффективного сотрудничества с предприятиями радиоэлектронной промышленности, предприятиями ВПК и научно-исследовательскими институтами России.

С нами вы становитесь еще успешнее!

Наши контакты:

Телефон: +7 812 627 14 35

Электронная почта: sales@st-electron.ru

Адрес: 198099, Санкт-Петербург, Промышленная ул, дом № 19, литера Н, помещение 100-Н Офис 331