FAIRCHILD SEMICONDUCTOR™

FDH/FDLL 300/A / 333

DO-35

LL-34

THE PLACEMENT OF THE EXPANSION GAP HAS NO RELATIONSHIP TO THE LOCATION OF THE CATHODE TERMINAL

COLOR BAND MARKING

DEVICE	1ST BAND	2ND BAND
FDLL300	BROWN	GREEN
FDLL300A	BROWN	YELLOW
FDLL333	BROWN	BLUE

High Conductance Low Leakage Diode

Sourced from Process 1M. See MMBD1501/A-1505/A for characteristics.

Absolute Maximum Ratings*

TA = 25°C unless otherwise noted

Symbol	Parameter	Value	Units
W_{IV}	Working Inverse Voltage	125	V
I_O	Average Rectified Current	200	mA
I_F	DC Forward Current	500	mA
i_f	Recurrent Peak Forward Current	600	mA
$i_{f(surge)}$	Peak Forward Surge Current Pulse width = 1.0 second Pulse width = 1.0 microsecond	 1.0 4.0	 A A
T_{stg}	Storage Temperature Range	-65 to +200	°C
T_J	Operating Junction Temperature	175	°C

*These ratings are limiting values above which the serviceability of any semiconductor device may be impaired.

NOTES:
1) These ratings are based on a maximum junction temperature of 200 degrees C.
2) These are steady state limits. The factory should be consulted on applications involving pulsed or low duty cycle operations.

Thermal Characteristics

TA = 25°C unless otherwise noted

Symbol	Characteristic	Max	Units
		FDH/FDLL 300/A / 333	
P_D	Total Device Dissipation Derate above 25°C	500 3.33	mW mW/°C
$R_{\theta JA}$	Thermal Resistance, Junction to Ambient	300	°C/W

ã 1997 Fairchild Semiconductor Corporation

High Conductance Low Leakage Diode
(continued)

Electrical Characteristics
TA = 25°C unless otherwise noted

Symbol	Parameter		Test Conditions	Min	Max	Units
B_V	Breakdown Voltage		I_R = 100 µA	150		V
I_R	Reverse Current	**FDH/FDLL 300/A**	V_R = 125 V		1.0	nA
			V_R = 125 V, T_A = 150°C		3.0	µA
		FDH/FDLL 333	V_R = 125 V		3.0	nA
			V_R = 125 V, T_A = 100°C		500	nA
V_F	Forward Voltage	**FDH/FDLL 300/A**	I_F = 1.0 mA		680	mV
		FDH/FDLL 300	I_F = 5.0 mA		750	mV
		FDH/FDLL 300A	I_F = 5.0 mA		760	mV
		FDH/FDLL 300/A	I_F = 10 mA		800	mV
		FDH/FDLL 300	I_F = 50 mA		880	mV
		FDH/FDLL 300A	I_F = 50 mA		890	mV
		FDH/FDLL 300/A	I_F = 100 mA		920	mV
		FDH/FDLL 300/A	I_F = 200 mA		1.0	V
		FDH/FDLL 333	I_F = 50 mA	800	890	mV
			I_F = 100 mA	830	940	mV
			I_F = 150 mA	860	970	mV
			I_F = 200 mA	0.87	1.05	V
			I_F = 250 mA	0.88	1.08	V
			I_F = 300 mA	0.9	1.15	V
C_O	Diode Capacitance		V_R = 0, f = 1.0 MHz		6.0	pF

DO-35 Tape and Reel Data

FAIRCHILD SEMICONDUCTOR™

DO-35 Packaging
Configuration: Figure 1.0

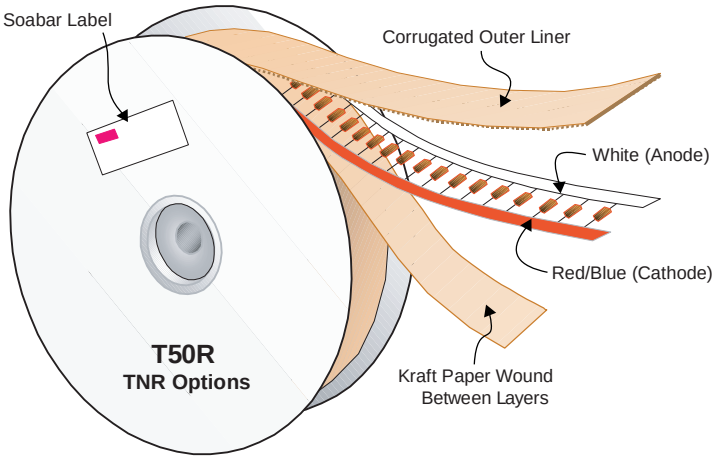

DO-35 Packaging
Information Table: Figure 2.0

DO-35 Packaging Information			
Packaging Option	T50R	T50A	Standard (no flow code)
Packaging type	TNR	Ammo	Bag
Qty per Reel/Tube/Bag	10,000	5,000	500
Reel Size (inch diameter)	13	-	-
Inside Tape Spacing (mm)	52	52	-
Int Box Dimension (mm)	254x79x794	406x267x184	279x133x108
Max qty per Box	30,000	50,000	5,000
Weight per unit (gm)	0.137	0.137	0.137
Weight per Reel/Ammo (kg)	2.23	0.800	-
Note/Comments			Bulk

Soabar Label sample

FAIRCHILD SEMICONDUCTOR.

		P.O. No.	
TYPE	IN5225A	**MARK**	BLK-BRN
REV	A2	**PART No.**	
PKG		**EC No.**	
QTY	10,000	**M.O. No.**	OX5046F035
Q.C.		**DATE**	D9903

MFD. UNDER US PAT 3.025.589 & OTHER US PATS & APPLICATIONS

DO-35 Reel Dimensions:
Figure 3.0

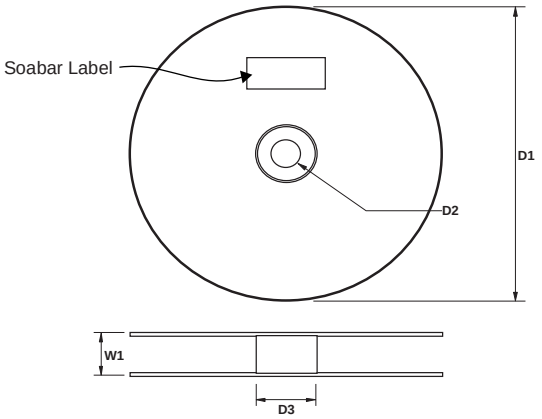

REEL DIMENSIONS

ITEM DESCRIPTION	SYMBOL	MINIMUM	MAXIMUM
Reel Diameter	D1	10.375	10.625
Arbor Hole Diameter (Standard)	D2	1.245	1.255
Core Diameter	D3	3.190	3.310
Flange to Flange Inner Width	W1		3.400

Note: All Dimensions are in inches

©2000 Fairchild Semiconductor International

DO-35 Tape and Ammo Data, continued

DO-35 Ammo Packing
Configuration: Figure 4.0

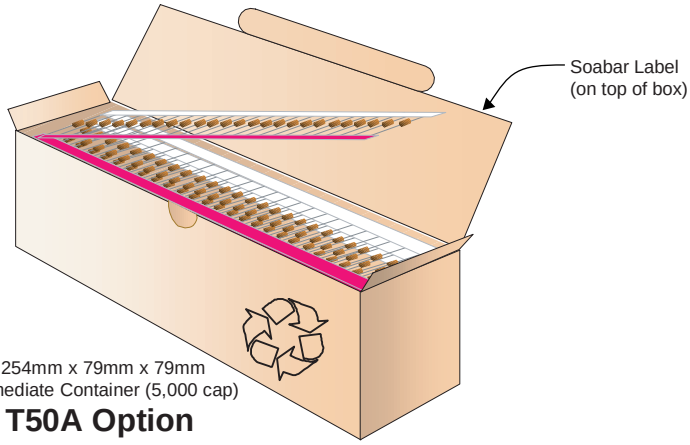

T50A Option

DO-35 Taping
Dimension: Figure 5.0

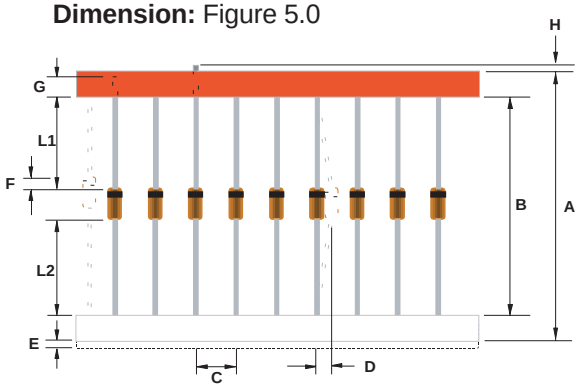

TAPING DIMENSIONS

	INCH	MM	MILS	NOTES
A	2.520 +0.066/ -0.027	64.00 +1.69/ -0.69	2519 +66.5/ -27.0	Overall width
B	2.047±0.027	52 ±0.69	2047±27	Inside Tape Spacing
C	0.200 ±0.0157	5.08 ±0.40	200 ±15.7	Component Pitch
D	0.047(max)	1.2(max)	47(max)	Component Misalignment
E	0.022(max)	0.55(max)	22(max)	Tape Mismatch
F	0.027(max)	±0.69	±27	Units in line w/ one another
G	0.126(min)	3.2(min)	126(min)	Lead amount between tapes
H	0	0	0	Lead amount beyond tapes
L1-L2	±0.027	±0.69	±27	Delta between two leads

DO-35 Bulk Packing
Configuration: Figure 6.0

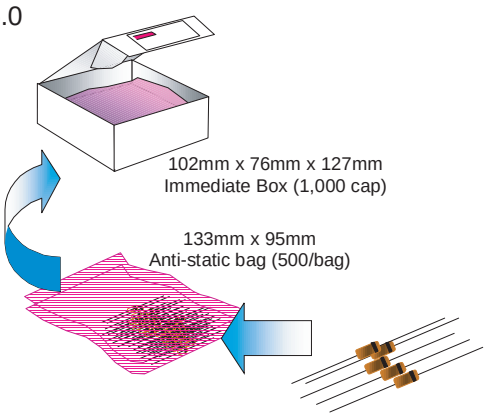

DO-35 Package Dimensions

FAIRCHILD SEMICONDUCTOR™

DO-35 (FS PKG Code D2)

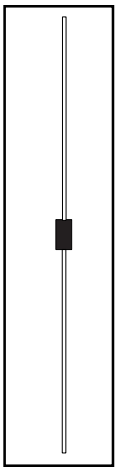

1:1

Scale 1:1 on letter size paper

Dimensions shown below are in millimeters

Part Weight per unit (gram): 0.137

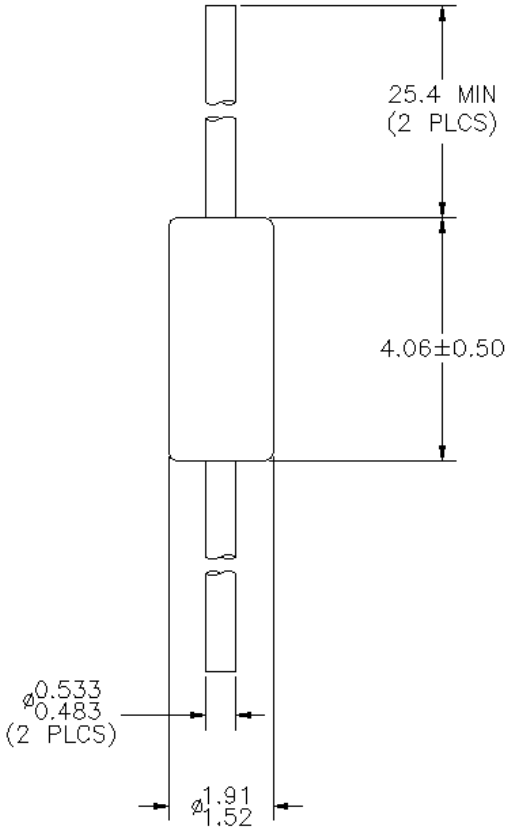

NOTES: UNLESS OTHERWISE SPECIFIED

A) THIS PACKAGE CONFORMS TO JEDEC DO-204, VAR. AH, ISSUE B, DATED JANUARY 20, 1976.

B) HERMITICALLY SEALED GLASS PACKAGE

©2000 Fairchild Semiconductor International

LL-34 Tape and Reel Data

FAIRCHILD SEMICONDUCTOR™

LL-34 Packaging Configuration: Figure 1.0

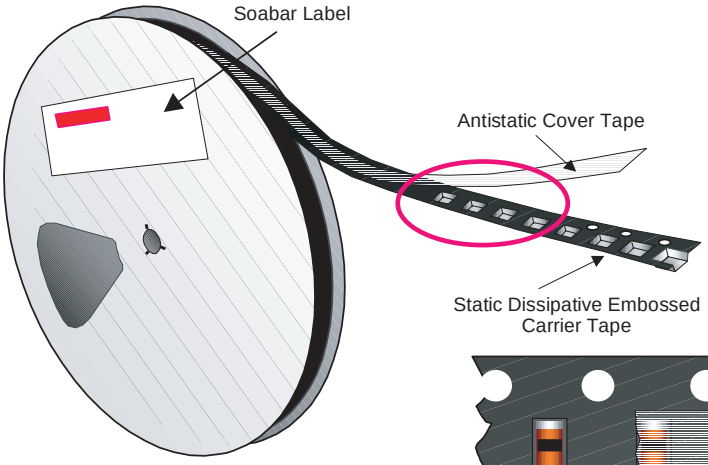

Packaging Description:

LL-34 parts are shipped in tape. The carrier tape is made from a dissipative (carbon filled) polycarbonate resin. The cover tape is a multilayer film (Heat Activated Adhesive in nature) primarily composed of polyester film, adhesive layer, sealant, and anti-static sprayed agent. These reeled parts in standard option are shipped with 2,500 units per 7" or 178cm diameter reel. The reels are white in color and is made of recyclable chipboard. Other option comes in 10,000 units per 13" or 330cm diameter reel. This and some other options are described in the Packaging Information table.

These full reels are individually labeled and placed inside a bleach box (illustrated in figure 1.0) made of recyclable corrugated paper. One bleach box contains six reels maximum. These bleach boxes are placed inside a labeled shipping box which comes in different sizes depending on the number of reels shipped.

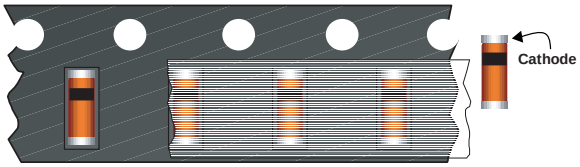

LL-34 Unit Orientation

LL-34 Packaging Information	
Packaging Option	Standard (no flow code)
Packaging type	TNR
Qty per Reel/Tube/Bag	2,500/1,000 (bulk)
Reel Size	7" Dia
Box Dimension (mm)	190x190x90
Max qty per Box	15,000
Weight per unit (gm)	0.030
Weight per Reel (kg)	0.150
Note/Comments	

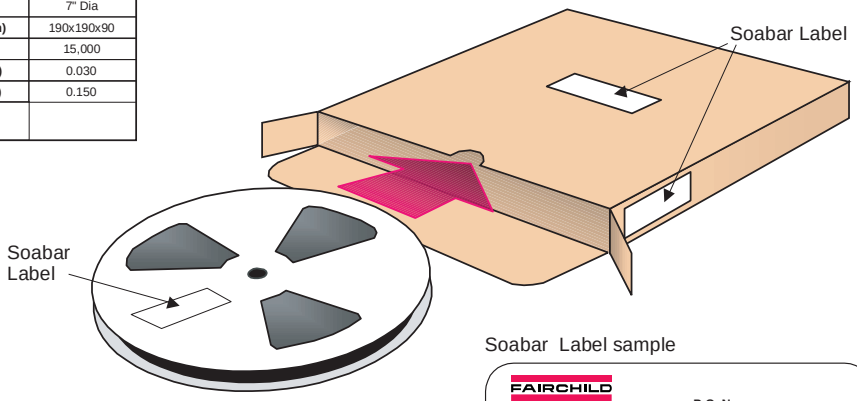

Soabar Label sample

FAIRCHILD SEMICONDUCTOR.

		P.O. No.	
TYPE	FDLL4148	MARK	BLK-BRN
REV	A2	PART No.	
PKG		EC No.	
QTY	2,500	M.O. No.	OX5046F035
Q.C.		DATE	D9903

MFD. UNDER US PAT 3.025.589 & OTHER US PATS & APPLICATIONS

LL-34 Tape Leader and Trailer Configuration: Figure 2.0

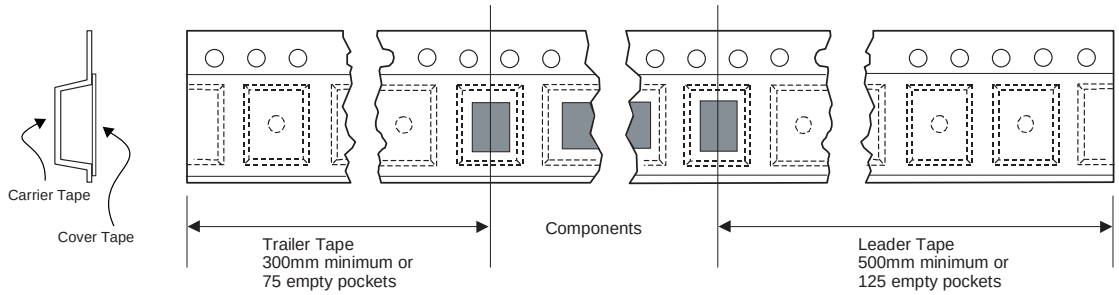

©2000 Fairchild Semiconductor International

LL-34 Tape and Reel Data,continued

LL-34 Embossed Carrier Tape Configuration: Figure 3.0

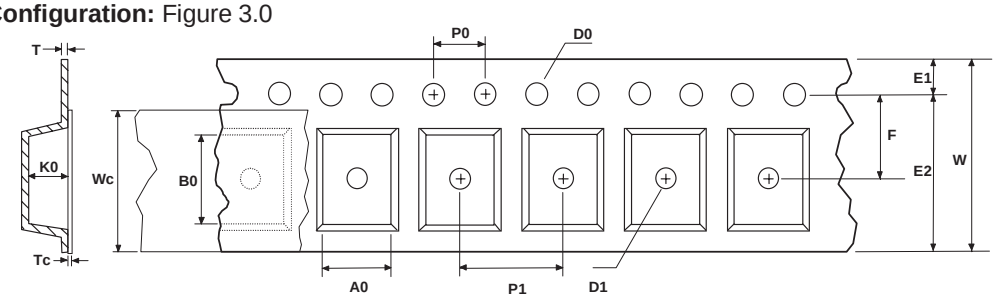

Dimensions are in millimeter														
Pkg type	**A0**	**B0**	**W**	**D0**	**D1**	**E1**	**E2**	**F**	**P1**	**P0**	**K0**	**T**	**Wc**	**Tc**
LL-34 (8mm)	1.7 +/-0.10	3.7 +/-0.10	8.0 +/-0.3	1.5 +/-0.10	1.1 +/-0.10	1.75 +/-0.10	6.25 min	3.50 +/-0.05	4.0 +/-0.1	4.05 +/-0.05	1.7 +/-0.10	0.3 +/-0.05	5.5 +/-0.2	0.10 max

Notes: A0, B0, and K0 dimensions are determined with respect to the EIA/Jedec RS-481 rotational and lateral movement requirements (see sketches A, B, and C).

Sketch A (Side or Front Sectional View)
Component Rotation

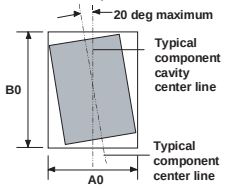

Sketch B (Top View)
Component Rotation

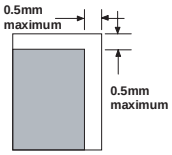

Sketch C (Top View)
Component lateral movement

LL-34 Carton Reel Configuration: Figure 4.0

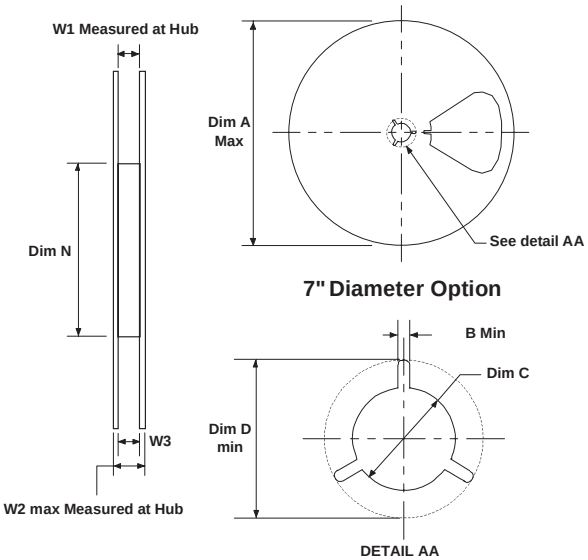

Dimensions are in inches and millimeters									
Tape Size	**Reel Option**	**Dim A**	**Dim B**	**Dim C**	**Dim D**	**Dim N**	**Dim W1**	**Dim W2**	**Dim W3 (LSL-USL)**
8mm	7" Dia	7.00 178	0.059 1.5	512 +0.020/-0.008 13 +0.5/-0.2	0.795 20.2	2.165 55	0.331 +0.059/-0.000 8.4 +1.5/0	0.567 14.4	0.311 – 0.429 7.9 – 10.9
8mm	13" Dia	13.00 330	0.059 1.5	512 +0.020/-0.008 13 +0.5/-0.2	0.795 20.2	4.00 100	0.331 +0.059/-0.000 8.4 +1.5/0	0.567 14.4	0.311 – 0.429 7.9 – 10.9

LL-34 (FS PKG Code D3)

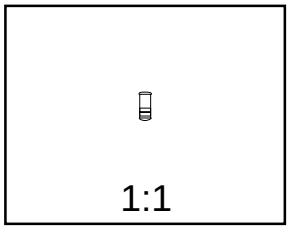

Scale 1:1 on letter size paper

Dimensions shown below are in millimeters

Part Weight per unit (gram): 0.030

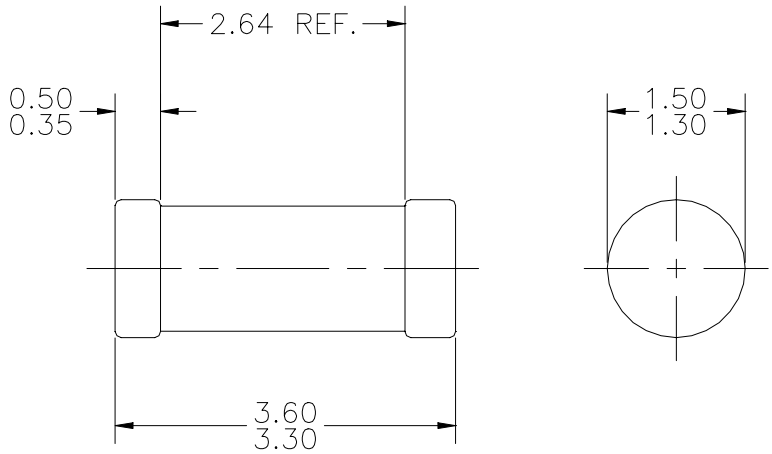

NOTE: UNLESS OTHERWISE SPECIFIED

A) THIS PACKAGE CONFORMS TO JEDEC DO-213, VAR AC, ISSUE D, DATED SEPTEMBER 1988.

B) ALL DIMENSIONS ARE IN MILLIMETERS.

©2000 Fairchild Semiconductor International

TRADEMARKS

The following are registered and unregistered trademarks Fairchild Semiconductor owns or is authorized to use and is not intended to be an exhaustive list of all such trademarks.

ACEx™
Bottomless™
CoolFET™
CROSSVOLT™
DOME™
E^2CMOS™
EnSigna™
FACT™
FACT Quiet Series™
FAST®
FASTr™
GlobalOptoisolator™
GTO™
HiSeC™
ISOPLANAR™
MICROWIRE™
OPTOLOGIC™
OPTOPLANAR™
PACMAN™
POP™
PowerTrench®
QFET™
QS™
QT Optoelectronics™
Quiet Series™
SILENT SWITCHER®
SMART START™
SuperSOT™-3
SuperSOT™-6
SuperSOT™-8
SyncFET™
TinyLogic™
UHC™
VCX™

DISCLAIMER

FAIRCHILD SEMICONDUCTOR RESERVES THE RIGHT TO MAKE CHANGES WITHOUT FURTHER NOTICE TO ANY PRODUCTS HEREIN TO IMPROVE RELIABILITY, FUNCTION OR DESIGN. FAIRCHILD DOES NOT ASSUME ANY LIABILITY ARISING OUT OF THE APPLICATION OR USE OF ANY PRODUCT OR CIRCUIT DESCRIBED HEREIN; NEITHER DOES IT CONVEY ANY LICENSE UNDER ITS PATENT RIGHTS, NOR THE RIGHTS OF OTHERS.

LIFE SUPPORT POLICY

FAIRCHILD'S PRODUCTS ARE NOT AUTHORIZED FOR USE AS CRITICAL COMPONENTS IN LIFE SUPPORT DEVICES OR SYSTEMS WITHOUT THE EXPRESS WRITTEN APPROVAL OF FAIRCHILD SEMICONDUCTOR CORPORATION.
As used herein:

1. Life support devices or systems are devices or systems which, (a) are intended for surgical implant into the body, or (b) support or sustain life, or (c) whose failure to perform when properly used in accordance with instructions for use provided in the labeling, can be reasonably expected to result in significant injury to the user.

2. A critical component is any component of a life support device or system whose failure to perform can be reasonably expected to cause the failure of the life support device or system, or to affect its safety or effectiveness.

PRODUCT STATUS DEFINITIONS

Definition of Terms

Datasheet Identification	Product Status	Definition
Advance Information	Formative or In Design	This datasheet contains the design specifications for product development. Specifications may change in any manner without notice.
Preliminary	First Production	This datasheet contains preliminary data, and supplementary data will be published at a later date. Fairchild Semiconductor reserves the right to make changes at any time without notice in order to improve design.
No Identification Needed	Full Production	This datasheet contains final specifications. Fairchild Semiconductor reserves the right to make changes at any time without notice in order to improve design.
Obsolete	Not In Production	This datasheet contains specifications on a product that has been discontinued by Fairchild semiconductor. The datasheet is printed for reference information only.

Мы молодая и активно развивающаяся компания в области поставок электронных компонентов. Мы поставляем электронные компоненты отечественного и импортного производства напрямую от производителей и с крупнейших складов мира.

Благодаря сотрудничеству с мировыми поставщиками мы осуществляем комплексные и плановые поставки широчайшего спектра электронных компонентов.

Собственная эффективная логистика и склад в обеспечивает надежную поставку продукции в точно указанные сроки по всей России.

Мы осуществляем техническую поддержку нашим клиентам и предпродажную проверку качества продукции. На все поставляемые продукты мы предоставляем гарантию .

Осуществляем поставки продукции под контролем ВП МО РФ на предприятия военно-промышленного комплекса России , а также работаем в рамках 275 ФЗ с открытием отдельных счетов в уполномоченном банке. Система менеджмента качества компании соответствует требованиям ГОСТ ISO 9001.

Минимальные сроки поставки, гибкие цены, неограниченный ассортимент и индивидуальный подход к клиентам являются основой для выстраивания долгосрочного и эффективного сотрудничества с предприятиями радиоэлектронной промышленности, предприятиями ВПК и научно-исследовательскими институтами России.

С нами вы становитесь еще успешнее!

Наши контакты:

Телефон: +7 812 627 14 35

Электронная почта: sales@st-electron.ru

Адрес: 198099, Санкт-Петербург, Промышленная ул, дом № 19, литера Н, помещение 100-Н Офис 331