Amphenol® JT/LJT Subminiature Cylindrical Connectors

12-090-18

Amphenol

Table of Contents

Description	*Page*
Amphenol® JT/LJT General Information	1
JT/LJT - The subminiature cylindrical for every application	2
JT/LJT - Specifications	3
JT/LJT - Insert availability and identification; alternate positioning	4, 5
JT/LJT - Insert availability and identification	6
JT/LJT - Insert arrangements	7 – 11
JT - Crimp, JT00R (MS27472) wall mounting receptacle	12
JT - Crimp, JTPQ00R (MS27497), wall mounting receptacle, back panel mounting	13
JT - Crimp, JT01R, line receptacle	14
JT - Crimp, JT02R (MS27499), box mounting receptacle	15
JT - Crimp, JTP02R (MS27508), box mounting recept., back panel mounting	16
JT - Crimp, JT06R (MS27473), straight plug	17
JT - Crimp, JTG06R (MS27484), straight plug with grounding fingers	18
JT - Crimp, JT07R (MS27474), jam nut receptacle	19
JT - Crimp, JTL07R, jam nut receptacle, miniature jam nut mounting dimensions	20
JT - Crimp, JT08R (MS27500), 90° plug	21
JT - Hermetic, JT00 (MS27475), wall mounting receptacle	22
JT - Hermetic, JT02 (MS27476), box mounting receptacle	23
JT - Hermetic, JT07 (MS27477), jam nut receptacle	24
JT - Hermetic, JTI (MS27478), solder mounting receptacle	25
JT - Accessories, plug protection cap	26
JT - Accessories, receptacle protection cap	27
JT - Accessories, strain relief (crimp type)	28
LJT - Crimp, LJT00R (MS27466) wall mounting receptacle	29
LJT - Crimp, LJTPQ00R (MS27656) wall mounting receptacle, back panel mounting	30
LJT - Crimp, LJT01R line receptacle	31
LJT - Crimp, LJT02R (MS27496) box mounting receptacle	32
LJT - Crimp, LJTP02R (MS27505) box mounting receptacle, back panel mounting	32
LJT - Crimp, LJT06R (MS27467) straight plug	33
LJT - Crimp, LJT07R (MS27468) jam nut receptacle	34
LJT - Hermetic, LJT00 (MS27469) wall mounting receptacle	35
LJT - Hermetic, LJT07 (MS27470) jam nut receptacle	36
LJT - Hermetic, LJTI (MS27471) solder mounting receptacle	37
LJT - Accessories, plug protection cap	38
LJT - Accessories, receptacle protection cap	39
LJT - Accessories, strain relief (solder type)	40
JT/LJT - Crimp contacts, printed circuit board, wire wrap contacts (sockets)	41
LJT - Printed circuit board, wire wrap contacts (sockets)	42
JT/LJT - Printed circuit board, wire wrap contacts (pins)	43
JT/LJT - Accessories, Universal “Header Assembly” for flex print or PCB mounting	44, 45
JT/LJT - Thermocouple contacts, plastic protection caps, sealing plugs	46
JT/LJT - Application tools	47
JT/LJT - Solder contact connectors	48
JT/LJT - How to Order	49
Specials - JT/LJT Connectors Types - Filter, Aquacon, Breakaway/Quick Disconnect	50
Specials - JT/LJT Ground Plane Connectors	51
Sales Office and Distributor Listing	52

MS Number	*Page*
MS20047	39
MS20048	38
MS27352	26
MS27353	27
MS27466	29
MS27467	33
MS27468	34
MS27469	35
MS27470	36
MS27471	37
MS27472	12
MS27473	17
MS27474	19
MS27475	22
MS27476	23
MS27477	24
MS27478	25
MS27479	12
MS27482	22
MS27483	24
MS27484	18
MS27488	44
MS27496	32
MS27497	13
MS27499	15
MS27500	21
MS27501	38
MS27502	39
MS27503	25
MS27505	32
MS27506-2	28
MS27508	16
MS27510	26
MS27511	27
MS27656	30

NOTE:

The connector products in this brochure were formerly known as Bendix® products. These products are now manufactured and sold under the Amphenol® brand name. The name “Amphenol” will replace the name “Bendix” on products and literature in the future.

See Amphenol catalogs on-line at: www.amphenol-aerospace.com

Amphenol Aerospace is a Certified ISO 9001 Manufacturer

Amphenol® JT/LJT

high reliability and high contact density with maximum weight and space savings

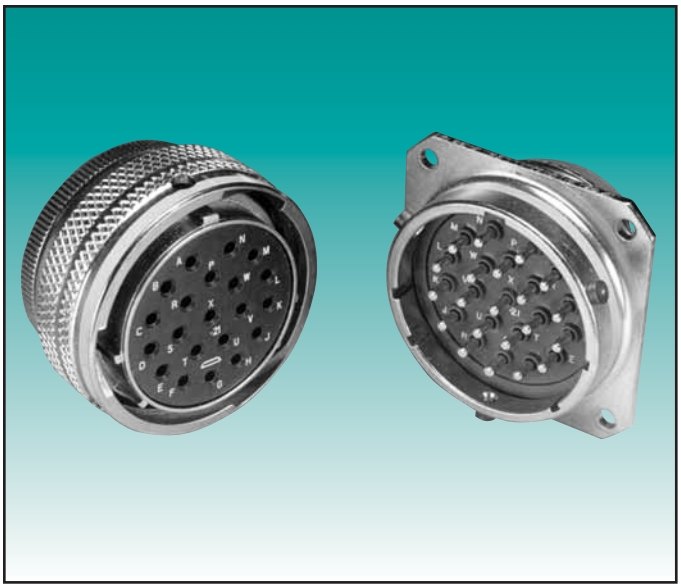

Amphenol® JT Connector

Amphenol® LJT Connector

For additional information on Amphenol JT/LJT connectors, or for special application requirements, contact your local sales office or:

Amphenol Corporation
Amphenol Aerospace
40 – 60 Delaware Avenue, Sidney, NY 13838-1395
Telephone: 607-563-5011 Fax: 607-563-5157
www.amphenol-aerospace.com

Amphenol® LJT and JT Series subminiature cylindrical connectors are qualified to MIL-DTL-38999*, Series I and II respectively. These connectors were developed to meet the needs of the aerospace industries, and provided the impetus for development of the MIL-C-38999 specifications, which recently were superseded by MIL-DTL-38999. Meeting or exceeding MIL-DTL-38999 requirements, Amphenol® JT/LJT connectors feature:

- **Lightweight, Space Saving Design**
- **Contact Protection -** 100% scoop-proof LJT design prevents bent pins and short circuits during mating
- **Quick Positive Coupling** - 3 point bayonet lock system
- **Mismating Eliminated** - with 5 key/keyway design
- **Error Proof Alternate Positioning** - insured by different key/keyway locations
- **EMI Shielding** - grounding fingers standard in LJT Series; optional in JT Series
- **Nine Shell Sizes and a Variety of Shell Styles**
- **Contact Options** - size 8, 10, 12, 16, 20, 22M and 22D Crimp, Solder, PCB, Wire wrap, Coax, Twinax, Triax, Thermocouple, Fiber Optic and Filter
- **Fixed Solder Contacts** - per MIL-C-27599 (see page 52 and Amphenol Product Data Sheet 158)
- **Hermetic** - air leakage limited to 1 X 10^{-7} cm^3 per second optional
- **"Breakaway" Lanyard Release Style** - available in LJT plugs. Provides quick disconnect of the connector plug and receptacle with axial pull on the lanyard. See pages 38-41.
- **Inventory Support Commonality** - uses standard MIL-DTL-38999 contacts, insert arrangements and application tools.
- **RoHS Compliant Product Available -** Consult Amphenol Aerospace Operations.

Where proof of high reliability and lot control is required, MS approved equivalents to most proprietary JT and LJT connectors are available.

* MIL-DTL-38999 Series I supersedes MIL-C-38999 Series I.
MIL-DTL-38999 Series II supersedes MIL-C-38999 Series II.

JT/LJT
the subminiature cylindrical for every application

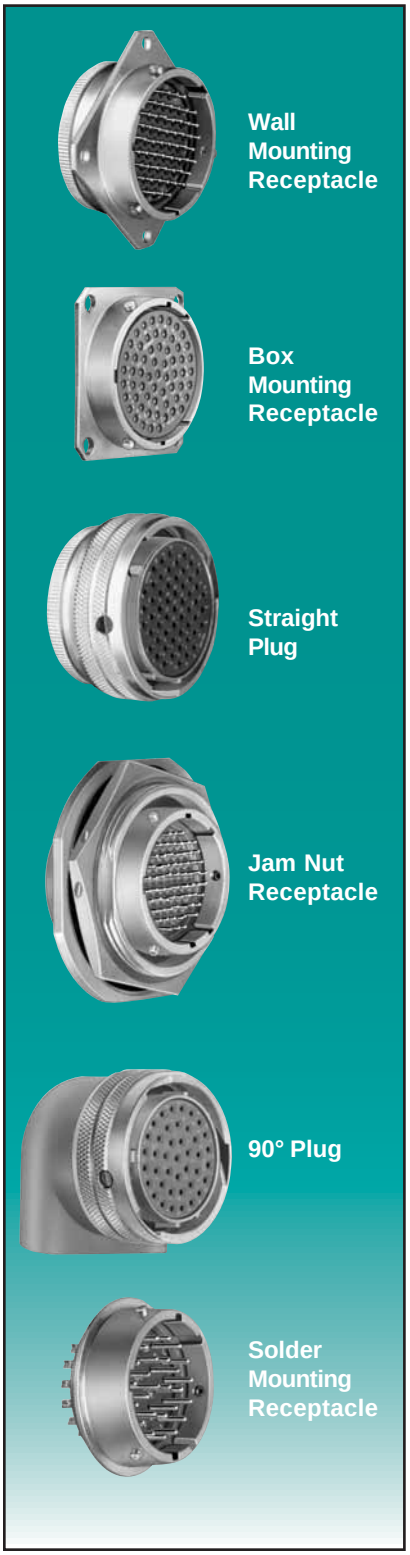

Components

Shell components are impact extruded or machined bar stock aluminum. Standard plating on shell components is cadmium over nickel. Many finishes are optional (see "Specifications" page 3). Hermetic seal receptacles are available in carbon steel or stainless steel shells. Dependable 5 key/keyway polarization with bayonet lock coupling is incorporated to aid and assure positive mating.

Insert material is a rigid dielectric with excellent electrical characteristics, providing durable protection for molded-in solder type contacts. Contrasting letter or number designations are used on insert faces.

A fluorinated silicone interfacial seal wafer is featured on the mating face of "crimp type pin" inserts. This assures complete electrical isolation of pins when connector halves are mated. In addition, a main joint gasket is installed in the receptacle for moisture sealing between connector halves. Both features are also available for hermetic receptacles.

Contacts

Maximum design flexibility is built into the JT/LJT Series, with a minimum of 2 to a maximum of 128 circuits per connector in a wide variety of contact arrangements. Contacts are available in sizes 8, 10, 12, 16, 20, 22, 22D and 22M with standard 50 micro inch minimum gold plating (100 micro inches optional). All socket contacts are probe proof. Crimp type rear removable contacts are featured in JT-R and LJT-R connectors. Solder termination contacts are also available, as well as PCB, wire wrap, thermocouple, fiber optic, coaxial, triaxial and twinax contact options.

Optional Features

High temperature capability of 392°F is available only in JTS or LJTS crimp type connectors. High temperature versions feature gold plated contacts, high temperature shell plating, stainless steel coupling nut spring, and epoxy inserts/fluorinated silicone grommet combination. Standard temperature capability for both solder and crimp is 302°F.

The JTN or LJTN type connectors are available for N_2O_4resistance provided they are mated, and ungrommeted rear faces are suitably protected.

For complete listing and definition of connector types, shell styles and service classes, see How to Order, page 53. For information on Fail-Safe Lanyard Release style plugs see pages 38-41.

JT/LJT specifications

CONTACT RATING

Contact Size	Test Current		Maximum Millivolt Drop Crimp*	Maximum Millivolt Drop	
	Solder & Crimp	Hermetic		Solder*	Hermetic*
22M	3	2	45	20	60
22D 5	3	73		85	
22	5	3	73	20	85
20	7.5	5	55	20	60
16	13	10	49	20	85
12	23	17	42	20	85
10 (Power)	33	NA	33	NA	NA

* 10 (Power) tested using silver plated wire.

Contact Size	Crimp Well Data		Solder Well Data	
	Well Diameter	Nominal Well Depth	Well Diameter	Nominal Well Depth
22M	.028 ±.001	.141	.029 +.004 –.000	
22D	.0345 ±.0010	.141		
22	.0365 ±.0010	.141	.036 +.004 –.000	.094
20	.047 ±.001	.209	.044 +.004 –.004	.125
16	.067 ±.001	.209	.078 +.000 –.004	.141
12	.100 ±.002	.209	.116 +.004 –.002	.141
10 (Power)	.137 ±.002	.355	NA	NA

SERVICE RATING**

Service Rating	Suggested Operating Voltage (Sea Level)		Test Voltage (Sea Level)	Test Voltage 50,000 ft	Test Voltage 70,000 ft	Test Voltage 110,000 ft
	AC (RMS)	DC				
M	400	500	1300 VRMS	550 VRMS	350 VRMS	200 VRMS
N	300	450	1000 VRMS	400 VRMS	260 VRMS	200 VRMS
I	600	850	1800 VRMS	600 VRMS	400 VRMS	200 VRMS
II	900	1250	2300 VRMS	800 VRMS	500 VRMS	200 VRMS

** Please note that the establishment of electrical safety factors is left entirely in the designer's hands, since he is in the best position to know what peak voltage, switching
surges, transients, etc. can be expected in a particular circuit.

FINISH DATA

Aluminum Shell Components Non-Hermetic				
Finish	Suffix		Indicated Finish Standard for JT Types Listed Below	Indicated Finish Standard for LJT Types Listed Below
	Military	Proprietary		
Cadmium Plated Nickel Base	MS (A)	–	JT/JTG/JTL/JTP	LJT/LJTP
Anodic Coating (Alumilite)	MS (C)	(005)	JTS/JTPS/JTLS	LJTPS/LJTS
Chromate Treated (Iridite 14-2)		(011)	JTN/JTPN/JTLN	LJTN/LJTPN
Olive Drab Cadmium Plate Nickel Base	MS (B)	(014)		
Electroless Nickel	MS (F)	(023)		

Hermetic Connectors				
Material/Finish	Suffix		Indicated Finish Standard for JT Types Listed Below	Indicated Finish Standard for LJT Types Listed Below
	Military	Proprietary		
Carbon Steel Shell Tin Plated Shell and Contacts			JT( )H/JT( )Y JTL( )H/JTL( )Y	LJT( )Y/LJT( )H
Carbon Steel Shell Tin Plated Shell and Gold Plated Contacts	MS (D)			
Stainless Steel Shell Gold Plated Contacts	MS (E)	(162)	JTS( )Y JTLS( )Y	LJTS( )Y

JT/LJT
insert availability and identification, alternate positioning

JT	LJT	Solder	Crimp	Hermetics Class H	Hermetics Class Y*	Service Rating	Total Contacts	Contact Size 22D	22M	22	20	16	12	8 (Coax)
8-2		P				M	2				2			
8-3		X	N/A	P	P	M	3				3			
	9-3	X												
8-6		X	X	P	P	M	6		6					
	9-6	X	X	P	P									
						M	7		7					
	9-7	X												
						I	2				2			
	9-22	X												
8-35			X	P	P	M	6	6						
	9-35		X	P	P									
8-44			X	P	P	M	4			4				
	9-44		X											
8-97		X				M	4		2		2			
8-98		S	X	P	P	I	3				3			
	9-98	X	X	P	P									
						I	2					2		
	11-2★		X	P**										
10-4			3			I	4				4			
	11-4	X	2											
10-5		X	X	P	P	I	5				5			
	11-5	X	X											
						I	6				6			
	11-6	S												
10-13		X	X	P	P	M	13		13					
	11-13	X	X	P	P									
10-35			X	P	P	M	13	13						
	11-35		X	P	P									
10-98		X	X	P	P	I	6				6			
	11-98	X	X	P	P									
10-99			X	P	P	I	7				7			
	11-99		P											
12-3		X	X	P	P	II	3					3		
	13-3		P											
12-4		X	X	P	P	I	4					4		
	13-4★	X	X	P	P									
12-8		X	X	P	P	I	8				8			
	13-8	X	X	P	P									
12-22			X	P	P	M	22		22					
	13-22	X	X	P	P									
12-35			X	P	P	M	22	22						
	13-35		X	P	P									
12-98		X	X	P	P	I	10				10			
	13-98	X	X	P	P									
14-4			2			I	4						4	
	15-4		2											
14-5		X	X	P	P	II	5					5		
	15-5★	X	X											
14-15		X	X	P	P	I	15				14	1		
	15-15	X	X	P	P									
14-18		X	X	P	P	I	18				18			
	15-18	X	X	P	P									
14-19		X	X			I	19				19			
	15-19		X											
14-35			X	P	P	M	37	37						
	15-35		X	P	P									
14-37		X	X	P	P	M	37		37					
	15-37	X	X	P	P									
14-68			2			1	8					8		
	15-68	X	3											
14-97			2	P	P	I	12				8	4		
	15-97	X	X	P	P									

JT MASTER KEY/KEYWAY ROTATION

AB ANGLE OF ROTATION (Degrees)					
Shell Size	Normal	A	B	C	D
8	100°	82°	–	–	118°
10	100°	86°	72°	128°	114°
12	100°	80°	68°	132°	120°
14	100°	79°	66°	134°	121°
16	100°	82°	70°	130°	118°
18	100°	82°	70°	130°	118°
20	100°	82°	70°	130°	118°
22	100°	85°	74°	126°	115°
24	100°	85°	74°	126°	115°

A plug with a given rotation letter will mate with a receptacle with the same rotation letter. The AB angle for a given connector is the same whether it contains pins or sockets. Only the master key/keyway rotates in the shell, and the insert always remains in the same position relative to the minor keys.

AB angles shown are viewed from the front face of the connector, a receptacle is shown below. The angles for the plug are exactly the same except the direction of rotation is opposite of that shown for the receptacle.

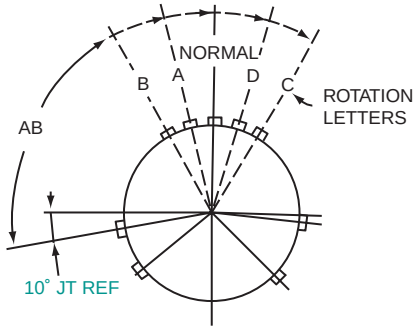

RELATIVE POSSIBLE POSITION OF ROTATED MASTER KEYWAY (front face of receptacle shown)

(P) Pin inserts only (consult Amphenol, Sidney, NY for socket availability)
(2) Not tooled for RP or 02RE
(3) Pin inserts only, not tooled for RP or 02RE (consult Amphenol, Sidney, NY for availability)
* Same as H with interfacial seal
** Tooled with special terminal only (consult Amphenol, Sidney, NY for availability of standard terminal)
★ Ground plane proprietary option available. See page 55 for further information on ground plane connectors.

JT/LJT
insert availability and identification, alternate positioning

JT	LJT	Solder	Crimp	Hermetics Class H	Hermetics Class Y*	Service Rating	Total Con-tacts	Contact Size 22D	22M	22	20	16	12	8 (Coax)	8 (Twinax)
						M	39	38							1
	17-2		X												
16-6			X	P	P	I	6						6		
	17-6		X	P	P										
16-8		X	X	P	P	II	8					8			
	17-8★	X	X	P	P										
16-13			2			I	13					13			
	17-13		2												
						Coax	4						2 Coax	2	
	17-22														
						M	24	22						2	
	17-25		2												
16-26		X	X	P	P	I	26				26				
	17-26	X	X	P	P										
16-35			X	P	P	M	55	55							
	17-35	X	X	P	P										
16-42			X			M	42			42					
	17-42		P												
16-55		X	X	P	P	M	55		55						
	17-55	X	X	P											
16-99		X	X	P	P	I	23				21	2			
	17-99	X	X												
18-11		X	X	P	P	II	11					11			
	19-11★	X	X	P	P										
						M	18	14							4
	19-18		2												
18-28		X	X	P	P	I	28				26	2			
	19-28	X	P												
18-30		X	X			I	30				29	1			
	19-30	X	P												
18-32		X	X	P	P	I	32				32				
	19-32	X	X	P	P										
18-35			X	P	P	M	66	66							
	19-35		X	P	P										
18-53		X	X			M	53			53					
	19-53		P												
18-66		X	X	P	P	M	66		66						
	19-66		X	P	P										
						M	67		67						
	19-67	X	3												
18-68			2			I	18					18			
	19-68		3												
18-96			2			I	9						9		
20-1			X	P		M	79		79						
	21-1		X												
20-2			X			M	65			65					
	21-2		2												
20-11			3			I	11						11		
	21-11★		2												
20-16		X	X	P	P	II	16					16			
	21-16★	X	X	P	P										
						I	24				24				
	21-24	X													
						I	25				25				
	21-25	X													
						I	27				27				
	21-27	X													
20-35			X			M	79	79							
	21-35		X												
20-39		X	X	P	P	I	39				37	2			
	21-39	X	X												
20-41		X	X	P	P	I	41				41				
	21-41	X	X												

LJT MASTER KEY/KEYWAY ROTATION

AB ANGLE OF ROTATION (Degrees)					
Shell Size	Normal	A	B	C	D
9	95°	77°	–	–	113°
11	95°	81°	67°	123°	109°
13	95°	75°	63°	127°	115°
15	95°	74°	61°	129°	116°
17	95°	77°	65°	125°	113°
19	95°	77°	65°	125°	113°
21	95°	77°	65°	125°	113°
23	95°	80°	69°	121°	110°
25	95°	80°	69°	121°	110°

A plug with a given rotation letter will mate with a receptacle with the same rotation letter. The AB angle for a given connector is the same whether it contains pins or sockets. Only the master key/keyway rotates in the shell, and the insert always remains in the same position relative to the minor keys.

AB angles shown are viewed from the front face of the connector, a receptacle is shown below. The angles for the plug are exactly the same except the direction of rotation is opposite of that shown for the receptacle.

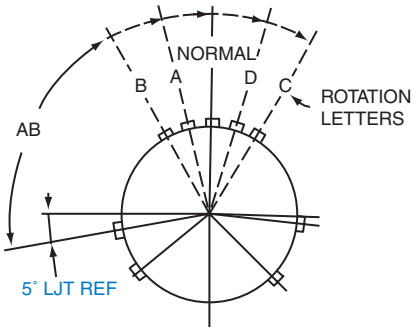

RELATIVE POSSIBLE POSITION OF ROTATED MASTER KEYWAY (front face of receptacle shown)

(P) Pin inserts only (consult Amphenol, Sidney, NY for socket availability)
(2) Not tooled for RP or 02RE
(3) Pin inserts only, not tooled for RP or 02RE (consult Amphenol, Sidney, NY for availability)
* Same as H with interfacial seal
★ Ground plane proprietary option available. See page 55 for further information on ground plane connectors.

JT/LJT
insert availability and identification

JT	LJT	Solder	Crimp	Hermetics Class H	Hermetics Class Y*	Service Rating	Total Con-tacts	Contact Size 22D	22M	22	20	16	12	8 (Coax)	8†† (Twinax)	10 (Power)	12 Coax
	21-75★		2			N	4							(See Note 4)			
	21-79		2			II	19	17						(See Note 5)			
22-1	23-1		X X			M	100		100								
22-2	23-2	X X	X X	P P	P P	M	85			85							
	23-6★		P			M	6								6		
22-14	23-14		2 2			I	14						14				
22-21	23-21★	X X	X X	P P	P P	II	21					21					
22-32	23-32	X X	X P	P		I	32				32						
	23-34	X				I	34				34						
22-35	23-35		X X			M	100	100									
22-53	23-53	X	P X	P		I	53				53						
22-55	23-55	X	X 3	P	P	I	55				55						
	23-97	X				II	16					16					
	23-99	X				II	11					11					
24-1	25-1		X X			M	128		128								
24-2	25-2		X X			M	100			100							
24-4	25-4		X X	P	P	I	56				48	8					
	25-7		2			M	99	97							2		
	25-11		2			N	11				2					9	
24-19	25-19★		2 2			I	19						19				
	25-20		2			N	30				10	13			3		4
24-24	25-24★		X X	P	P	I	24					12	12				
24-29	25-29★	X	X X			I	29					29					
24-35	25-35		X X			M	128	128									
24-37	25-37★		2 2			I	37					37					
24-43	25-43	X	3 2	P	P	I	43				23	20					
	25-46		2			I	46				40	4		2†			
24-61	25-61	X X	X X	P P	P P	I	61				61						

(P) Pin inserts only (consult Amphenol, Sidney, NY for socket availability)
(2) Not tooled for RP or 02RE
(3) Pin inserts only, not tooled for RP or 02RE (consult Amphenol, Sidney, NY for availability)
* Same as H with interfacial seal
** Two size 16 contacts dedicated to fiber optics. Consult Amphenol, Sidney, NY or catalog section 12-352 for fiber optic contact information.

† For RG180/U and RG195/U cables only (consult Amphenol, Sidney, NY for other cable applications)
†† Size 8 Coax and Twinax are interchangeable
(4) MS connector 21-75 is supplied with four size 8 twinax contacts. Proprietary connector 21-75 is supplied with four size 8 coax contacts.
(5) MS connector 21-79 has provision for two size 8 coax contacts. Coax contacts are not supplied unless specified by customer.
★ Ground plane proprietary option available. See page 55 for further information on ground plane connectors.

JT/LJT
insert arrangements

black arrangements – JT or LJT
green arrangements – JT only
blue arrangements – LJT only

front face of pin inserts illustrated

Insert Arrangement (JT)	8-2	8-3	8-6			8-35	8-44	8-97	8-98
Insert Arrangement (LJT)		9-3	9-6	9-7	9-22	9-35	9-44		9-98
Service Rating	M	M	M	M	I	M	M	M	I
Number of Contacts	2	3	6	7	2	6	4	2 2	3
Contact Size	20	20	22M	22M	20	22D	22	22M 20	20

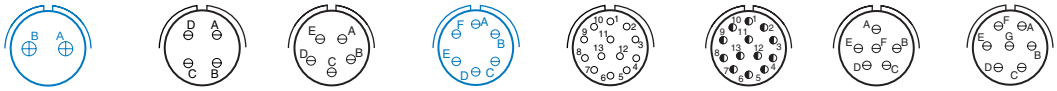

Insert Arrangement (JT)		10-4	10-5		10-13	10-35	10-98	10-99
Insert Arrangement (LJT)	11-2	11-4	11-5	11-6	11-13	11-35	11-98	11-99
Service Rating	I	I	I	I	M	M	I	I
Number of Contacts	2	4	5	6	13	13	6	7
Contact Size	16	20	20	20	22M	22D	20	20

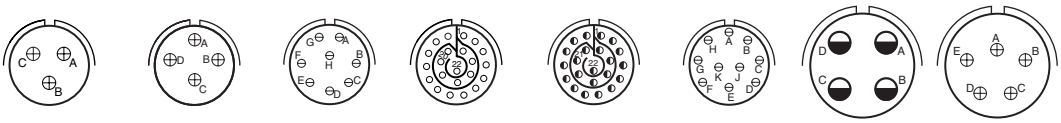

Insert Arrangement (JT)	12-3	12-4	12-8	12-22	12-35	12-98	14-4	14-5
Insert Arrangement (LJT)	13-3	13-4	13-8	13-22	13-35	13-98	15-4	15-5
Service Rating	II	I	I	M	M	I	I	II
Number of Contacts	3	4	8	22	22	10	4	5
Contact Size	16	16	20	22M	22D	20	12	16

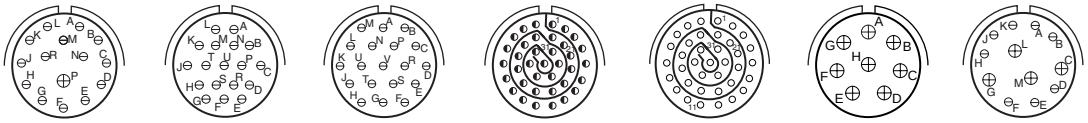

Insert Arrangement (JT)	14-15	14-18	14-19	14-35	14-37	14-68	14-97
Insert Arrangement (LJT)	15-15	15-18	15-19	15-35	15-37	15-68	15-97
Service Rating	I	I	I	M	M	I	I
Number of Contacts	14 1	18	19	37	37	8	8 4
Contact Size	20 16	20	20	22D	22M	16	20 16

CONTACT LEGEND 8 10 12 16 20 22 22M 22D

JT/LJT
insert arrangements

black arrangements – JT or LJT
green arrangements – JT only
blue arrangements – LJT only

front face of pin inserts illustrated

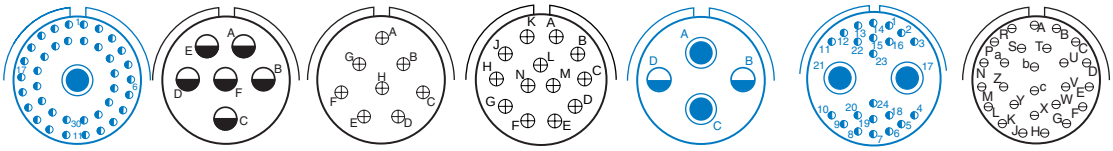

Insert Arrangement (JT)		16-6	16-8	16-13			16-26
Insert Arrangement (LJT)	17-2	17-6	17-8	17-13	17-22	17-25	17-26
Service Rating	M	I	II	I	Coax	M	I
Number of Contacts	38 1	6	8	13	2 2	22 2	26
Contact Size	22D 8 Twinax	12	16	16	12 Coax 8 Coax	22D 8 Coax	20

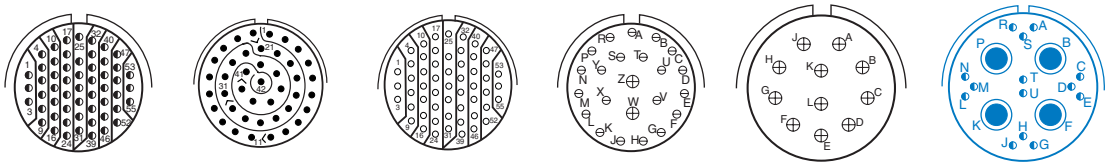

Insert Arrangement (JT)	16-35	16-42	16-55	16-99	18-11	
Insert Arrangement (LJT)	17-35	17-42	17-55	17-99	19-11	19-18
Service Rating	M	M	M	I	II	M
Number of Contacts	55	42	55	21 2	11	14 4
Contact Size	22D	22	22M	20 16	16	22D 8 Twinax

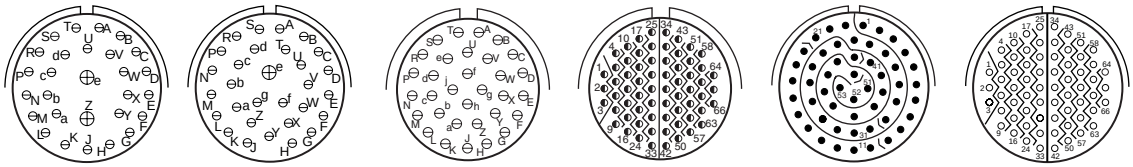

Insert Arrangement (JT)	18-28	18-30	18-32	18-35	18-53	18-66
Insert Arrangement (LJT)	19-28	19-30	19-32	19-35	19-53	19-66
Service Rating	I	I	I	M	M	M
Number of Contacts	26 2	29 1	32	66	53	66
Contact Size	20 16	20 16	20	22D	22	22M

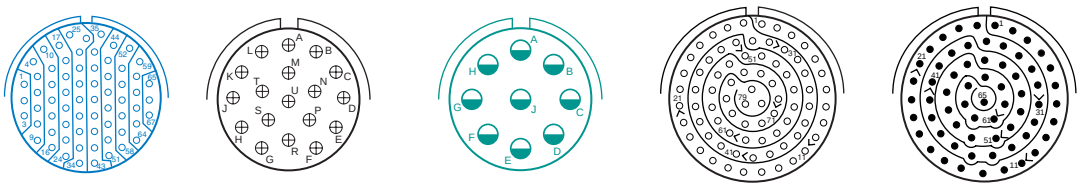

Insert Arrangement (JT)		18-68	18-96	20-1	20-2
Insert Arrangement (LJT)	19-67	19-68		21-1	21-2
Service Rating	M	I	I	M	M
Number of Contacts	67	18	9	79	65
Contact Size	22M	16	12	22M	22

CONTACT LEGEND 8 10 12 16 20 22 22M 22D

JT/LJT
insert arrangements

black arrangements – JT or LJT
green arrangements – JT only
blue arrangements – LJT only

front face of pin inserts illustrated

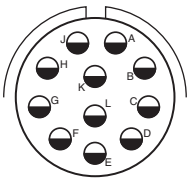
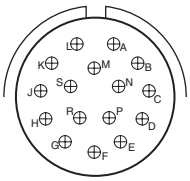
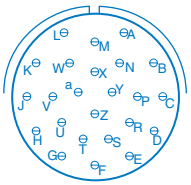
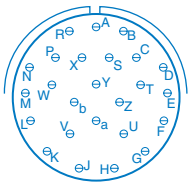
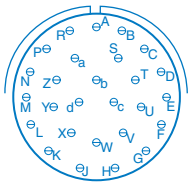

Insert Arrangement (JT)	**20-11**	**20-16**			
Insert Arrangement (LJT)	**21-11**	**21-16**	**21-24**	**21-25**	**21-27**
Service Rating	**I**	**II**	**I**	**I**	**I**
Number of Contacts	**11**	**16**	**24**	**25**	**27**
Contact Size	**12**	**16**	**20**	**20**	**20**

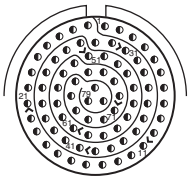
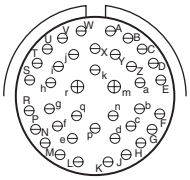
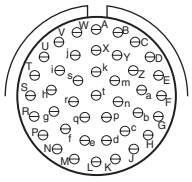
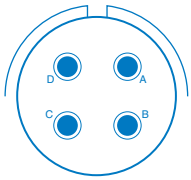
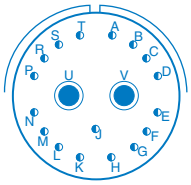

Insert Arrangement (JT)	**20-35**	**20-39**	**20-41**		
Insert Arrangement (LJT)	**21-35**	**21-39**	**21-41**	**21-75**	**21-79**
Service Rating	**M**	**I**	**I**	**N**	**II**
Number of Contacts	**79**	**37 2**	**41**	**4**	**17**
Contact Size	**22D**	**20 16**	**20**	**(See Note)**	**22D (See Note)**

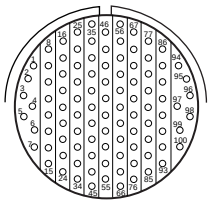
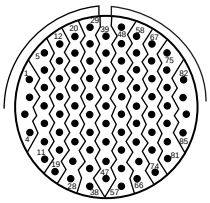
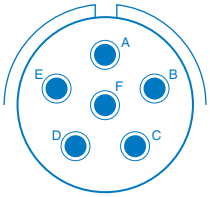
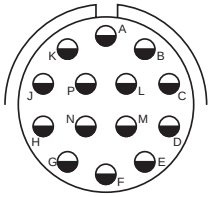

Insert Arrangement (JT)	**22-1**	**22-2**		**22-14**
Insert Arrangement (LJT)	**23-1**	**23-2**	**23-6**	**23-14**
Service Rating	**M**	**M**	**M**	**I**
Number of Contacts	**100**	**85**	**6**	**14**
Contact Size	**22M**	**22**	**8 Twinax**	**12**

Note: MS connector 21-75 is supplied with four size 8 twinax contacts.
Proprietary connector 21-75 is supplied with four size 8 coax contacts.

MS connector 21-79 has provision for two size 8 coax contacts.
Coax contacts are not supplied unless specified by customer.

CONTACT LEGEND 8 10 12 16 20 22 22M 22D

JT/LJT
insert arrangements

black arrangements – JT or LJT
green arrangements – JT only
blue arrangements – LJT only

front face of pin inserts illustrated

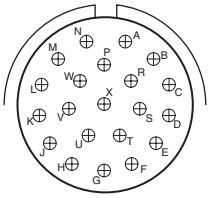
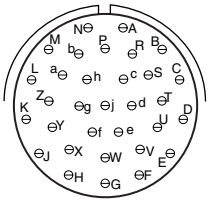
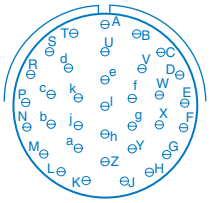
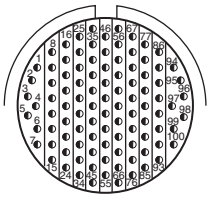

Insert Arrangement (JT)	**22-21**	**22-32**		**22-35**
Insert Arrangement (LJT)	**23-21**	**23-32**	**23-34**	**23-35**
Service Rating	**II**	**I**	**I**	**M**
Number of Contacts	**21**	**32**	**34**	**100**
Contact Size	**16**	**20**	**20**	**22D**

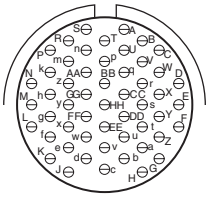
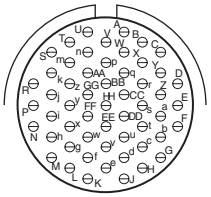
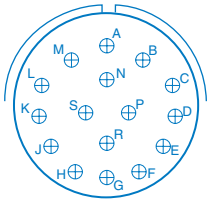
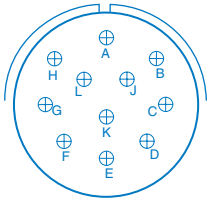

Insert Arrangement (JT)	**22-53**	**22-55**		
Insert Arrangement (LJT)	**23-53**	**23-55**	**23-97**	**23-99**
Service Rating	**I**	**I**	**II**	**II**
Number of Contacts	**53**	**55**	**16**	**11**
Contact Size	**20**	**20**	**16**	**16**

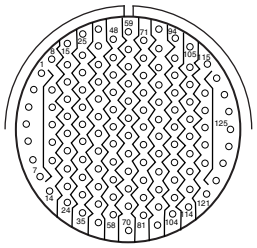
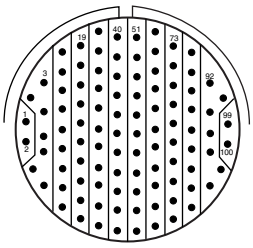
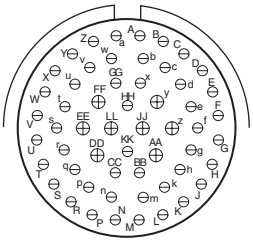

Insert Arrangement (JT)	**24-1**	**24-2**	**24-4**
Insert Arrangement (LJT)	**25-1**	**25-2**	**25-4**
Service Rating	**M**	**M**	**I**
Number of Contacts	**128**	**100**	**48 8**
Contact Size	**22M**	**22**	**20 16**

CONTACT LEGEND 8 10 12 16 20 22 22M 22D

JT/LJT
insert arrangements

black arrangements – JT or LJT
green arrangements – JT only
blue arrangements – LJT only

front face of pin inserts illustrated

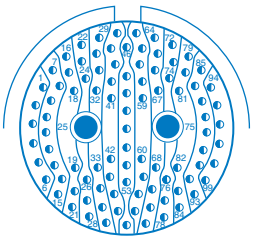
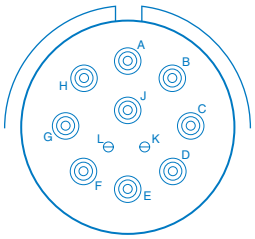
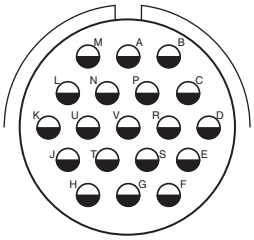
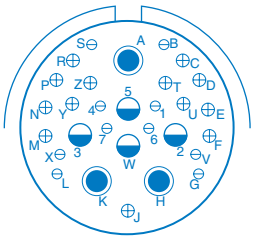

Insert Arrangement (JT)			**24-19**	
Insert Arrangement (LJT)	**25-7**	**25-11**	**25-19**	**25-20**
Service Rating	**M**	**N**	**I**	**N**
Number of Contacts	**97 2**	**2 9**	**19**	**10 13 3 4**
Contact Size	**22D 8 Twinax**	**20 10**	**12**	**20 16 8 Twinax 12 Coax**
				(Locations U and Y - Dedicated to Fiber Optics)

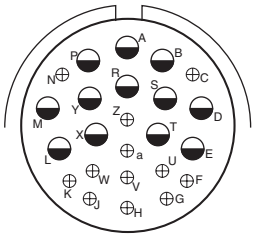
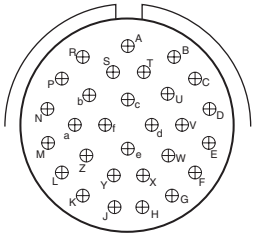
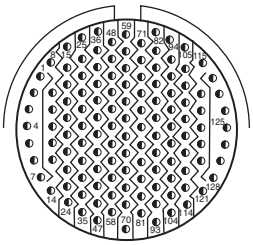
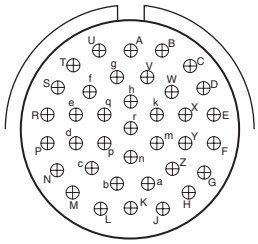

Insert Arrangement (JT)	**24-24**	**24-29**	**24-35**	**24-37**
Insert Arrangement (LJT)	**25-24**	**25-29**	**25-35**	**25-37**
Service Rating	**I**	**I**	**M**	**I**
Number of Contacts	**12 12**	**29**	**128**	**37**
Contact Size	**16 12**	**16**	**22D**	**16**

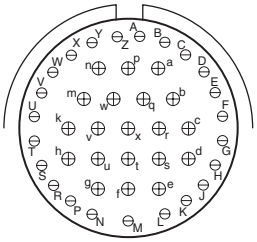
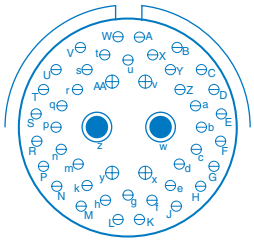
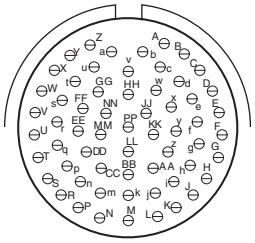

Insert Arrangement (JT)	**24-43**		**24-61**
Insert Arrangement (LJT)	**25-43**	**25-46**	**25-61**
Service Rating	**I**	**I**	**I**
Number of Contacts	**23 20**	**40 4 2**	**61**
Contact Size	**20 16**	**20 16 8 Coax†**	**20**

† Coax contacts for RG180 or RG195 cable.

CONTACT LEGEND 8 10 12 16 20 22 22M 22D

JT00R (MS27472) — crimp
wall mounting receptacle

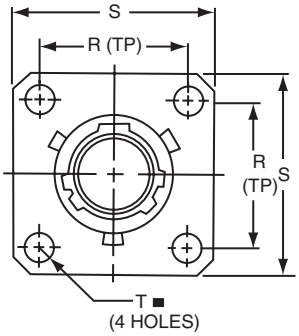

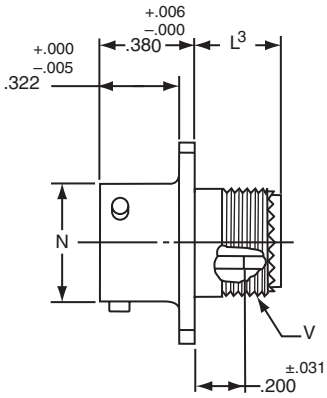

* JT00RT-XX-XXX(MS27472T)
** JTS00RT-XX-XXX(MS27479T)
*** JTN00RT-XX-XXX

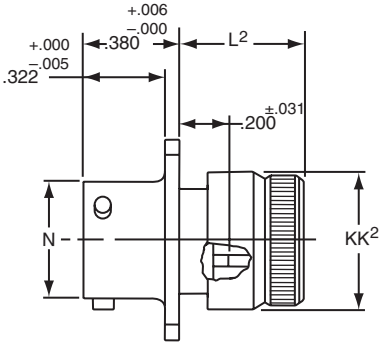

* JT00RE-XX-XXX (MS27472E)
** JTS00RE-XX-XXX(MS27479E)
*** JTN00RE-XX-XXX

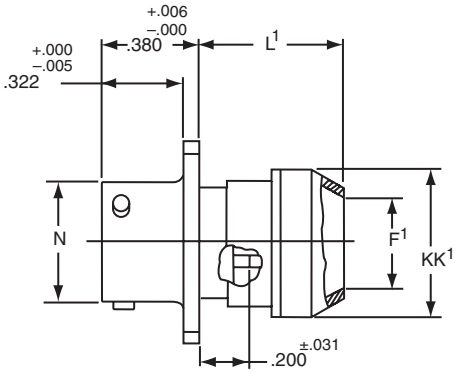

* JT00RP-XX-XXX(MS27472P)
** JTS00RP-XX-XXX
*** JTN00RP-XX-XXX

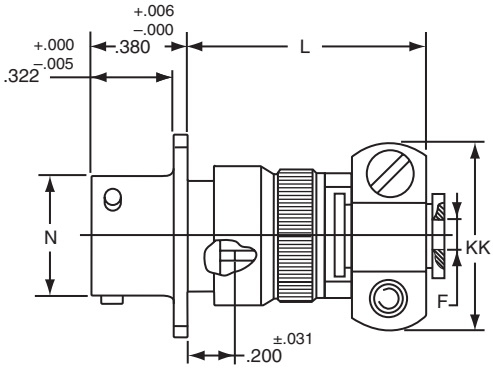

* JT00RE-XX-XXX (SR)
** JTS00RE-XX-XXX (SR)
*** JTN00RE-XX-XXX (SR)

■ ⊕ .005 DIA Ⓜ

* To complete order number see page 53.
** High temperature version; to complete order number see page 53.
*** Clear iridite finish (gold color), N_2O_4 resistant; to complete order number see page 53.

Shell Size	F Dia. +.010 –.025	F[1] Dia. ±.010	L Max.	L[1] Max.	L[2] Max.	L[3] Max.	N +.001 –.005	R (TP)	S ±.016	T ±.005	V Thread UNEF Class 2A (Plated)	KK Max.	KK[1] Dia. Max.	KK[2] Dia. Max.
8	.125	.444	1.094	.609	.547	.500	.473	.594	.812	.120	.4375-28	.812	.625	.578
10	.188	.558	1.094	.609	.547	.500	.590	.719	.938	.120	.5625-24	.875	.750	.703
12	.312	.683	1.094	.609	.547	.500	.750	.812	1.031	.120	.6875-24	1.000	.875	.828
14	.375	.808	1.344	.609	.547	.500	.875	.906	1.125	.120	.8125-20	1.125	1.000	.953
16	.500	.909	1.344	.609	.547	.500	1.000	.969	1.219	.120	.9375-20	1.188	1.125	1.078
18	.625	1.034	1.344	.609	.547	.500	1.125	1.062	1.312	.120	1.0625-18	1.438	1.250	1.203
20	.625	1.159	1.344	.609	.547	.500	1.250	1.156	1.438	.120	1.1875-18	1.438	1.375	1.328
22	.750	1.284	1.469	.609	.547	.500	1.375	1.250	1.562	.120	1.3125-18	1.625	1.500	1.453
24	.800	1.409	1.469	.688	.547	.500	1.500	1.375	1.688	.147	1.4375-18	1.719	1.625	1.578

All dimensions for reference only.

JTPQ00R (MS27497) — crimp
wall mounting receptacle (back panel mounting)

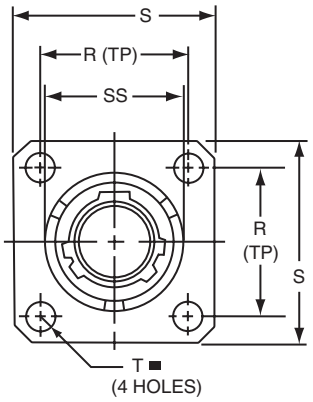

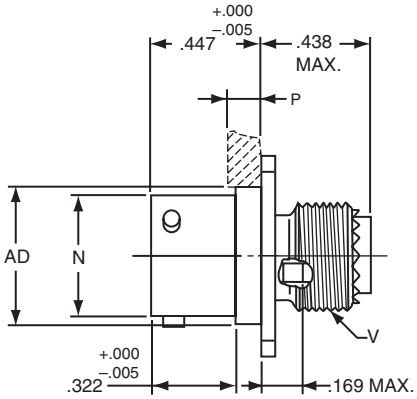

* JTPQ00RT-XX-XXX(MS27497T)
** JTPSQ00RT-XX-XXX

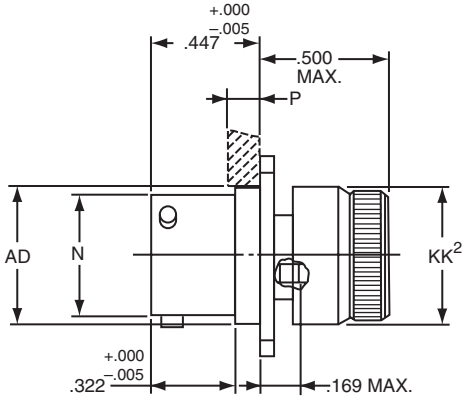

* JTPQ00RE-XX-XXX (MS27497E)

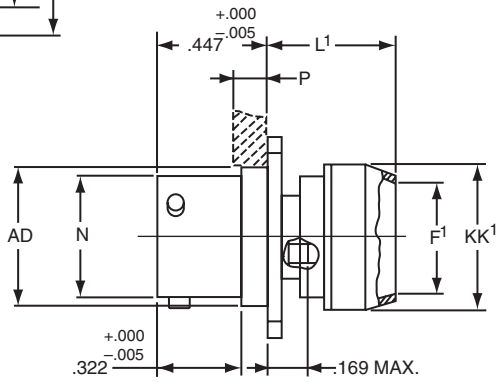

* JTPQ00RP-XX-XXX(MS27497P)

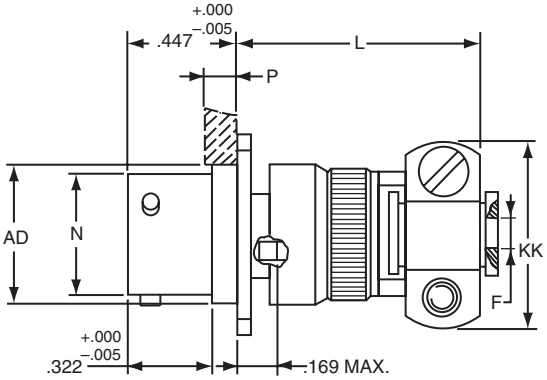

*JTPQ00RE-XX-XXX (SR)

■ ⊕ .005 DIA Ⓜ

* To complete order number see page 53.
** High temperature version; to complete order number see page 53.

Shell Size	F Dia. +.010 –.025	F[1] Dia. ±.010	L Max.	L[1] Max.	N Dia. +.001 –.005	P Max. Panel Thickness	R (TP)	S ±.016	T Dia. ±.005	V Thread UNEF Class 2A (Plated)	AD Dia. ±.005	KK Max.	KK[1] Dia. Max.	KK[2] Dia. Max.	SS Dia. +.000 –.016
8	.125	.444	1.140	.468	.473	.142	.594	.812	.120	.4375-28	.516	.781	.625	.578	.563
10	.188	.558	1.140	.468	.590	.142	.719	.938	.120	.5625-24	.633	.844	.750	.703	.680
12	.312	.683	1.140	.468	.750	.142	.812	1.031	.120	.6875-24	.802	.969	.875	.828	.859
14	.375	.808	1.375	.468	.875	.142	.906	1.125	.120	.8125-20	.927	1.094	1.000	.953	.984
16	.500	.909	1.375	.468	1.000	.142	.969	1.219	.120	.9375-20	1.052	1.154	1.125	1.078	1.108
18	.625	1.034	1.375	.468	1.125	.142	1.062	1.312	.120	1.0625-18	1.177	1.406	1.250	1.203	1.233
20	.625	1.159	1.375	.468	1.250	.142	1.156	1.438	.120	1.1875-18	1.302	1.406	1.375	1.328	1.358
22	.750	1.284	1.516	.468	1.375	.142	1.250	1.562	.120	1.3125-18	1.427	1.594	1.500	1.453	1.483
24	.800	1.409	1.500	.540	1.500	.142	1.375	1.688	.147	1.4375-18	1.552	1.688	1.625	1.578	1.610

All dimensions for reference only.

JT01R — crimp
line receptacle

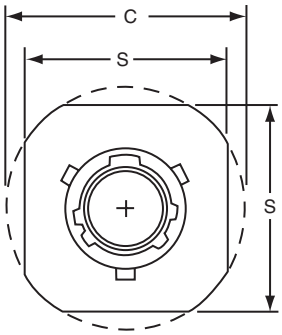

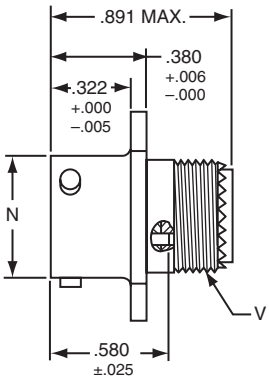

* JT01RT-XX-XXX
** JTS01RT-XX-XXX
*** JTN01RT-XX-XXX

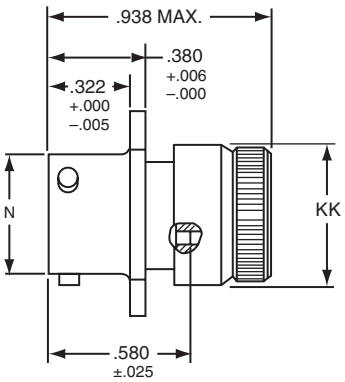

* JT01RE-XX-XXX
** JTS01RE-XX-XXX
*** JTN01RE-XX-XXX

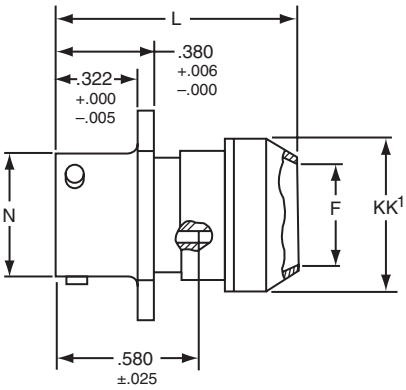

* JT01RP-XX-XXX
** JTS01RP-XX-XXX
*** JTN01RP-XX-XXX

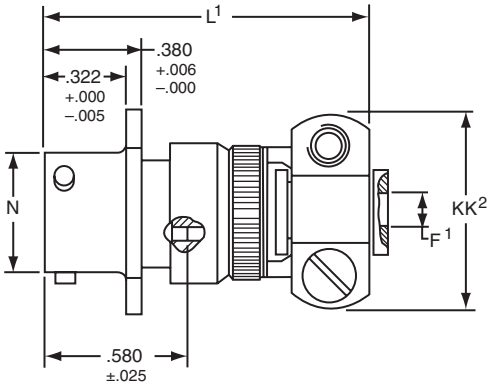

* JT01RE-XX-XXX (SR)
** JTS01RE-XX-XXX (SR)
*** JTN01RE-XX-XXX (SR)

* To complete order number see page 53.
** High temperature version; to complete order number see page 53.
*** Clear iridite finish (gold color), N_2O_4 resistant; to complete order number see page 53.

Shell Size	C Max.	F Dia. ±.010	F[1] Dia. +.010 –.025	L Max.	L[1] Max.	N Dia. +.001 –.005	S +.017 –.016	V Thread UNEF Class 2A (Plated)	KK Dia. Max.	KK[1] Dia. Max.	KK[2] Max.
8	.965	.444	.125	1.031	1.562	.473	.812	.4375-28	.578	.625	.812
10	1.089	.558	.188	1.031	1.562	.590	.938	.5625-24	.703	.750	.875
12	1.183	.683	.312	1.031	1.562	.750	1.031	.6875-24	.828	.875	1.000
14	1.277	.808	.375	1.031	1.812	.875	1.125	.8125-20	.953	1.000	1.125
16	1.371	.909	.500	1.031	1.812	1.000	1.219	.9375-20	1.078	1.125	1.188
18	1.465	1.034	.625	1.031	1.812	1.125	1.312	1.0625-18	1.203	1.250	1.438
20	1.589	1.159	.625	1.031	1.812	1.250	1.438	1.1875-18	1.328	1.375	1.438
22	1.715	1.284	.750	1.031	1.938	1.375	1.562	1.3125-18	1.453	1.500	1.625
24	1.838	1.409	.800	1.109	1.938	1.500	1.688	1.4375-18	1.578	1.625	1.719

All dimensions for reference only.

JT02R (MS27499) — crimp
box mounting receptacle
JT02R (MS27513) — crimp
box mounting receptacle

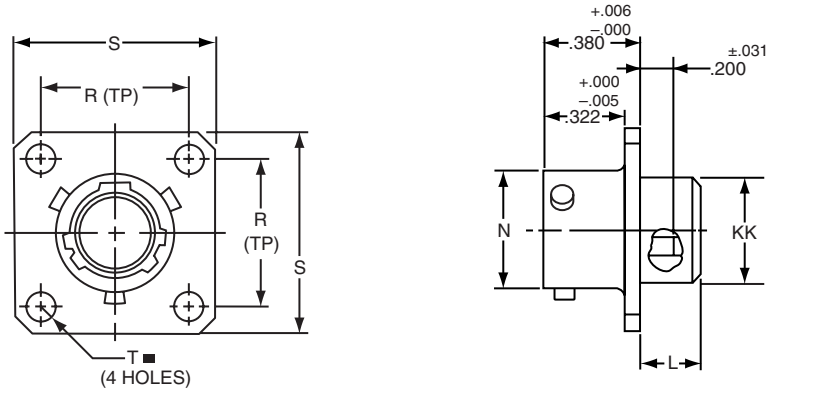

* JT02R-XX-XXX (MS27499)
** JTS02R-XX-XXX
*** JTN02R-XX-XXX

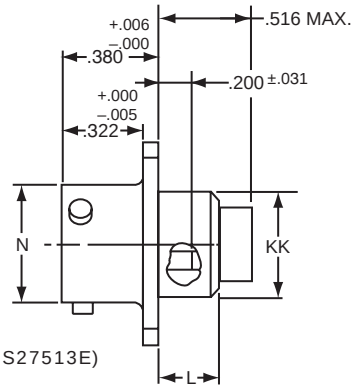

* JT02RE-XX-XXX (MS27513E)
** JTS02RE-XX-XXX
*** JTN02RE-XX-XXX

■ ⊕ .005 DIA Ⓜ

* To complete order number see page 53.
** High temperature version; to complete order number see page 53.
*** Clear iridite finish (gold color), N_2O_4 resistant; to complete order number see page 53.

Shell Size	L Max.	N +.001 –.005	R (TP)	S ±.016	T ±.005	KK Dia. Max.
8	.286	.473	.594	.812	.120	.438
10	.286	.590	.719	.938	.120	.563
12	.286	.750	.812	1.031	.120	.688
14	.286	.875	.906	1.125	.120	.813
16	.286	1.000	.969	1.219	.120	.938
18	.286	1.125	1.062	1.312	.120	1.047
20	.286	1.250	1.156	1.438	.120	1.172
22	.286	1.375	1.250	1.562	.120	1.297
24	.286	1.500	1.375	1.688	.147	1.422

All dimensions for reference only.
NOTE: For applications requiring an environmental seal, please refer to JT00R, page 12.

JTP02R (MS27508) – crimp
box mounting receptacle (back panel mounting)

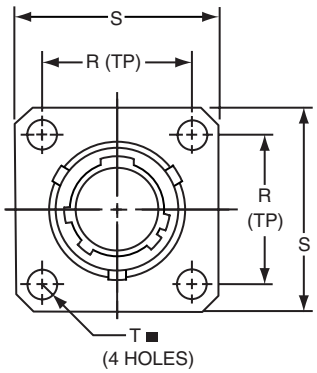

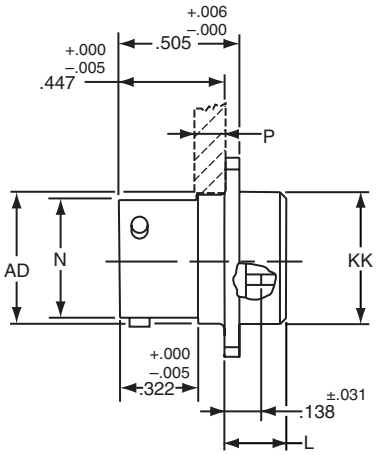

* JTP02RE-XX-XXX (MS27508E)
** JTPS02RE-XX-XXX
*** JTPN02RE-XX-XXX

■ ⊕ .005 DIA Ⓜ

* To complete order number see page 53.
** High temperature version; to complete order number see page 53.
*** Clear iridite finish (gold color), N_2O_4 resistant; to complete order number see page 53.

Shell Size	L Max.	N +.001 –.005	P Max. Panel Thickness	R (TP)	S ±.016	T Dia. ±.005	AD Dia. ±.005	KK Dia. Max.
8	.225	.473	.147	.594	.812	.120	.516	.531
10	.225	.590	.152	.719	.938	.120	.633	.656
12	.225	.750	.152	.812	1.031	.120	.802	.828
14	.225	.875	.152	.906	1.125	.120	.927	.953
16	.225	1.000	.152	.969	1.219	.120	1.052	1.078
18	.225	1.125	.152	1.062	1.312	.120	1.177	1.203
20	.225	1.250	.179	1.156	1.438	.120	1.302	1.328
22	.225	1.375	.179	1.250	1.562	.120	1.427	1.453
24	.225	1.500	.169	1.375	1.688	.147	1.552	1.578

All dimensions for reference only.

JT06R (MS27473) – crimp
straight plug

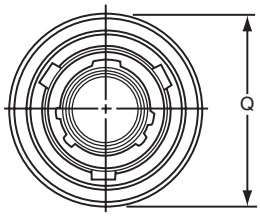

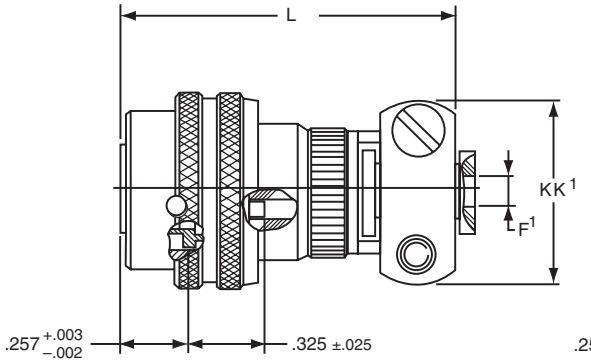

* JT06RE-XX-XXX (SR)
** JTS06RE-XX-XXX (SR)
*** JTN06RE-XX-XXX (SR)

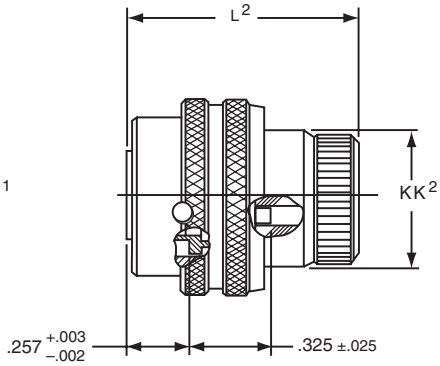

* JT06RE-XX-XXX (MS27473E)
** JTS06RE-XX-XXX
*** JTN06RE-XX-XXX

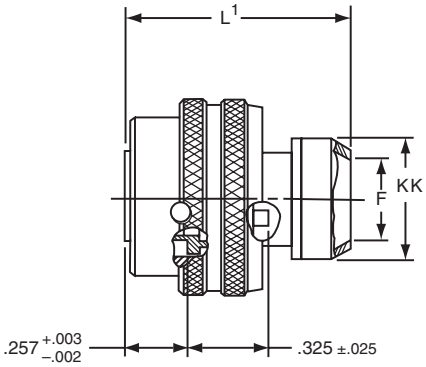

* JT06RP-XX-XXX (MS27473P)
** JTS06RP-XX-XXX
*** JTN06RP-XX-XXX

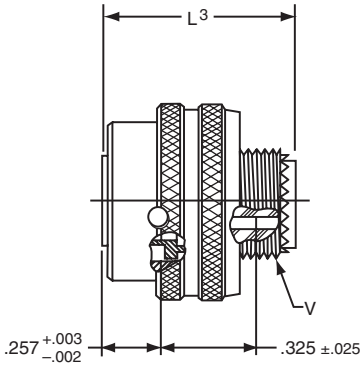

* JT06RT-XX-XXX (MS27473T)
** JTS06RT-XX-XXX
*** JTN06RT-XX-XXX

* To complete order number see page 53.
** High temperature version; to complete order number see page 53.
*** Clear iridite finish (gold color), N_2O_4 resistant; to complete order number see page 53.

Shell Size	F Dia.	F[1] Dia. +.010 –.025	L Max.	L[1] Max.	L[2] Max.	L[3] Max.	Q Dia. Max.	V Thread Modified		KK Dia. Max.	KK[1] Max.	KK[2] Dia. Max.
								Class 2A UNEF	Modified Major Dia.			
8	.444	.125	1.562	1.000	.938	.891	.734	.4375-28	.421 – .417	.625	.812	.578
10	.558	.188	1.562	1.000	.938	.891	.844	.5625-24	.542 – .538	.750	.875	.703
12	.683	.312	1.562	1.000	.938	.891	1.016	.6875-24	.667 – .663	.875	1.000	.828
14	.808	.375	1.812	1.000	.938	.891	1.141	.8125-20	.791 – .787	1.000	1.125	.953
16	.909	.500	1.812	1.000	.938	.891	1.265	.9375-20	.916 – .912	1.125	1.188	1.078
18	1.034	.625	1.812	1.000	.938	.891	1.391	1.0625-18	1.034 – 1.030	1.250	1.438	1.203
20	1.159	.625	1.812	1.000	.938	.891	1.500	1.1875-18	1.158 – 1.154	1.375	1.438	1.328
22	1.284	.750	1.938	1.000	.938	.891	1.625	1.3125-18	1.283 – 1.279	1.500	1.625	1.453
24	1.409	.800	1.938	1.062	.938	.891	1.750	1.4375-18	1.408 – 1.404	1.625	1.719	1.578

All dimensions for reference only.

JTG06R (MS27484) – crimp
straight plug (with grounding fingers)

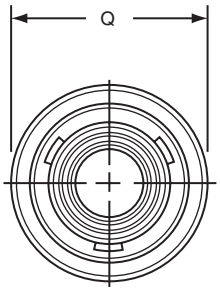

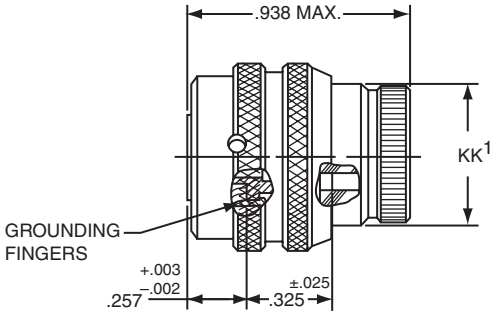

* JTG06RE-XX-XXX (MS27484E)
** JTNG06RE-XX-XXX

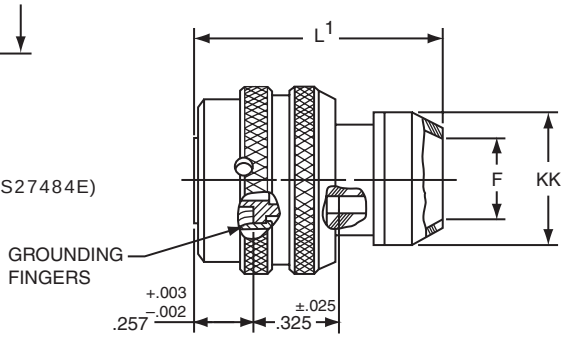

* JTG06RP-XX-XXX (MS27484P)
** JTNG06RP-XX-XXX

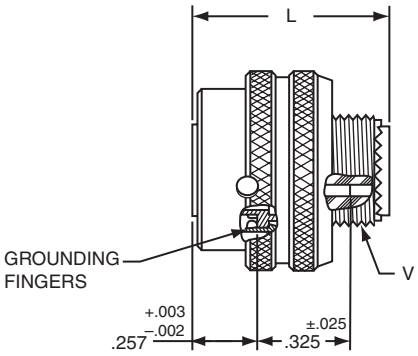

* JTG06RT-XX-XXX (MS27484T)
** JTNG06RT-XX-XXX

* To complete order number see page 53.
** Clear iridite finish (gold color), N_2O_4 resistant; to complete order number see page 53.

Shell Size	F Dia.	L Max.	L1 Max.	Q Dia. Max.	V Thread Modified Class 2A UNEF	V Thread Modified Modified Major Dia.	KK Dia. Max.	KK1 Dia. Max.
8	.444	.891	1.000	.734	.4375-28	.421 – .417	.625	.578
10	.558	.891	1.000	.844	.5625-24	.542 – .538	.750	.703
12	.683	.891	1.000	1.016	.6875-24	.667 – .663	.875	.828
14	.808	.891	1.000	1.141	.8125-20	.791 – .787	1.000	.953
16	.909	.891	1.000	1.265	.9375-20	.916 – .912	1.125	1.078
18	1.034	.891	1.000	1.391	1.0625-18	1.034 – 1.030	1.250	1.203
20	1.159	.891	1.000	1.500	1.1875-18	1.158 – 1.154	1.375	1.328
22	1.284	.891	1.000	1.625	1.3125-18	1.283 – 1.279	1.500	1.453
24	1.409	.891	1.062	1.750	1.4375-18	1.408 – 1.404	1.625	1.578

All dimensions for reference only.

JT07R (MS27474) — crimp
jam nut receptacle

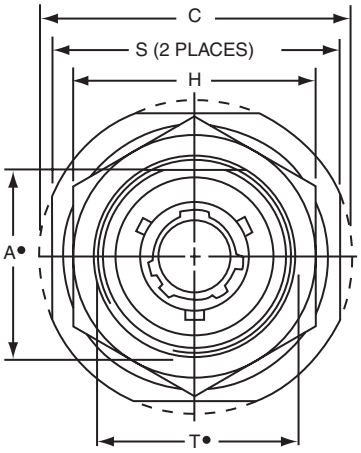

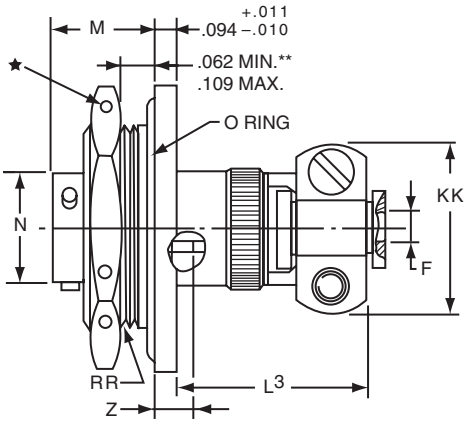

* JT07RE-XX-XXX (SR)
*** JTS07RE-XX-XXX (SR)
**** JTN07RE-XX-XXX (SR)

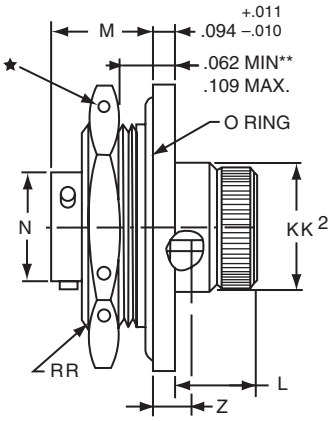

* JT07RE-XX-XXX (MS27474E)
*** JTS07RE-XX-XXX
**** JTN07RE-XX-XXX

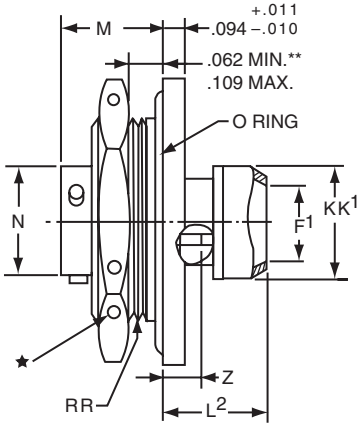

* JT07RP-XX-XXX (MS27474P)
*** JTS07RP-XX-XXX
**** JTN07RP-XX-XXX

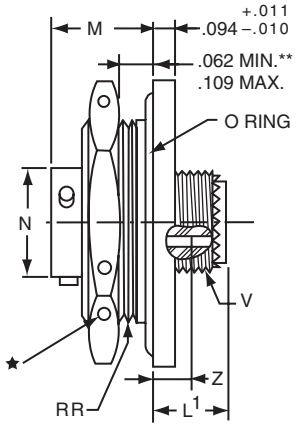

* JT07RT-XX-XXX (MS27474T)
*** JTS07RT-XX-XXX
**** JTN07RT-XX-XXX

★ .059 Dia. Min. 3 lockwire holes.
Formed lockwire hole design (6 holes) is optional.
• "D" shaped mounting hole dimensions.
* To complete order number see page 53.
** Panel Thickness
*** High temperature version; to complete order number see page 53.
**** Clear iridite finish (gold color), N_2O_4 resistant; to complete order number see page 53.

Shell Size	A• +.000 –.010	C Max.	F Dia +.010 –.025	F1 Dia.	H Hex +.017 –.016	L Max.	L1 Max.	L2 Max.	L3 Max.	M ±.005	N +.001 –.005	S ±.016	T• +.010 –.000	V Thread UNEF Class 2A	Z ±.031	KK Max.	KK1 Dia. Max.	KK2 Dia. Max.	RR Thread (Plated) Class 2A
8	.830	1.390	.125	.444	1.062	.484	.453	.563	1.047	.438	.473	1.250	.884	.4375-28	.144	.812	.625	.578	.8750-20UNEF
10	.955	1.515	.188	.558	1.188	.484	.453	.563	1.047	.438	.590	1.375	1.007	.5625-24	.144	.875	.750	.703	1.0000-20UNEF
12	1.084	1.640	.312	.683	1.312	.484	.453	.563	1.047	.438	.750	1.500	1.134	.6875-24	.144	1.000	.875	.828	1.1250-18UNEF
14	1.208	1.765	.375	.808	1.438	.484	.453	.563	1.297	.438	.875	1.625	1.259	.8125-20	.144	1.125	1.000	.953	1.2500-18UNEF
16	1.333	1.953	.500	.909	1.562	.484	.453	.563	1.297	.438	1.000	1.781	1.384	.9375-20	.144	1.188	1.125	1.078	1.3750-18UNEF
18	1.459	2.031	.625	1.034	1.688	.484	.453	.563	1.297	.438	1.125	1.890	1.507	1.0625-18	.144	1.438	1.250	1.203	1.5000-18UNEF
20	1.576	2.156	.625	1.159	1.812	.453	.422	.531	1.266	.464	1.250	2.016	1.634	1.1875-18	.188	1.438	1.375	1.328	1.6250-18UNEF
22	1.701	2.280	.750	1.284	2.000	.453	.422	.531	1.391	.464	1.375	2.140	1.759	1.3125-18	.188	1.625	1.500	1.453	1.7500-18UNS
24	1.826	2.405	.800	1.409	2.125	.375	.422	.609	1.391	.464	1.500	2.265	1.884	1.4375-18	.188	1.719	1.625	1.578	1.8750-16UN

All dimensions for reference only.

JTL07R — crimp
jam nut receptacle
(miniature jam nut mounting dimensions)

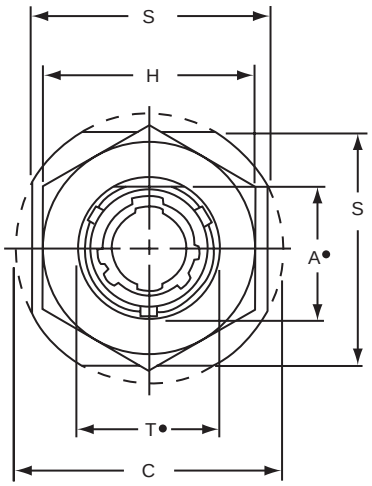

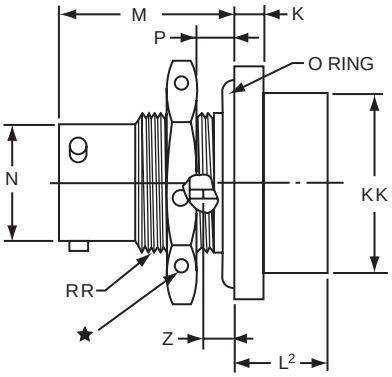

* JTL07RP-XX-XXX
*** JTLS07RP-XX-XXX
**** JTLN07RP-XX-XXX

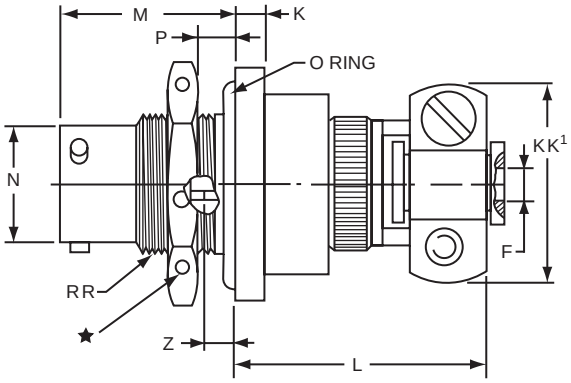

* JTL07RE-XX-XXX (SR)
*** JTLS07RE-XX-XXX (SR)
**** JTLN07RE-XX-XXX (SR)

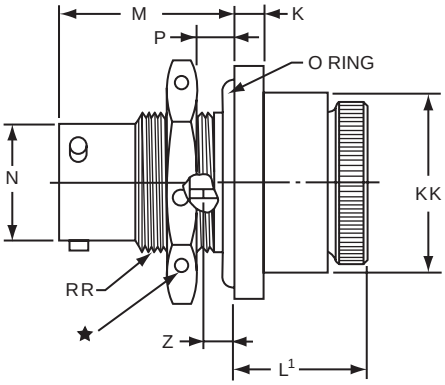

* JTL07RE-XX-XXX
*** JTLS07RE-XX-XXX
**** JTLN07RE-XX-XXX

★ .059 Dia. Min. 3 lockwire holes.
Formed lockwire hole design (6 holes) is optional.
• "D" shaped mounting hole dimensions.
* To complete order number see page 53.
*** High temperature version; to complete order number see page 53.
**** Clear iridite finish (gold color), N_2O_4 resistant; to complete order number see page 53.

Shell Size	A• +.000 –.010	C Max.	F Dia. +.010 –.025	H Hex +.017 –.016	K +.011 –.010	L Max.	L1 Max.	L2 Max.	M ±.005	N Dia. +.001 –.005	P Panel Thickness Min.	P Panel Thickness Max.	S ±.016	T• +.010 –.000	Z ±.026	KK Dia. Max.	KK1 Max.	RR Thread Class 2A
8	.542	1.077	.125	.750	.125	1.062	.641	.375	.630	.473	.062	.125	.938	.572	.047	.688	.812	.5625-24UNEF
10	.669	1.203	.188	.875	.125	1.062	.641	.375	.630	.590	.062	.125	1.062	.697	.047	.812	.875	.6875-24UNEF
12	.830	1.390	.312	1.062	.125	1.062	.641	.375	.630	.750	.062	.125	1.250	.844	.047	.938	1.000	.8750-20UNEF
14	.955	1.515	.375	1.188	.125	1.062	.641	.375	.630	.875	.062	.125	1.375	1.007	.047	1.062	1.125	1.0000-20UNEF
16	1.084	1.640	.500	1.312	.125	1.062	.641	.375	.630	1.000	.062	.125	1.500	1.134	.047	1.188	1.188	1.1250-18UNEF
18	1.208	1.765	.625	1.438	.125	1.062	.641	.375	.630	1.125	.062	.125	1.625	1.259	.047	1.312	1.438	1.2500-18UNEF
20	1.333	1.953	.625	1.562	.156	1.062	.703	.328	.755	1.250	.062	.250	1.812	1.384	.172	1.469	1.438	1.3750-18UNEF
22	1.459	2.075	.750	1.688	.156	1.062	.703	.328	.755	1.375	.062	.250	1.938	1.507	.172	1.594	1.625	1.5000-18UNEF
24	1.575	2.203	.800	1.812	.156	1.062	.703	.328	.755	1.500	.062	.250	2.062	1.634	.172	1.719	1.719	1.6250-18UNEF

All dimensions for reference only.

JT08R (MS27500) — crimp
90° plug

* JT08RP-XX-XXX
** JTS08RP-XX-XXX
*** JTN08RP-XX-XXX

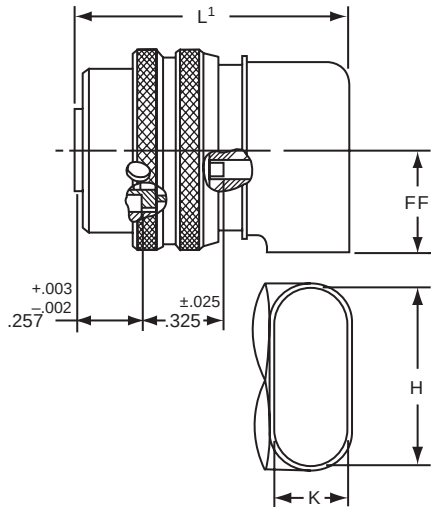

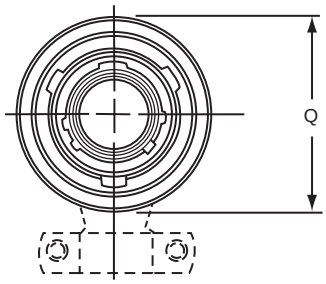

* JT08RE-XX-XXX (MS27500E)
** JTS08RE-XX-XXX
*** JTN08RE-XX-XXX

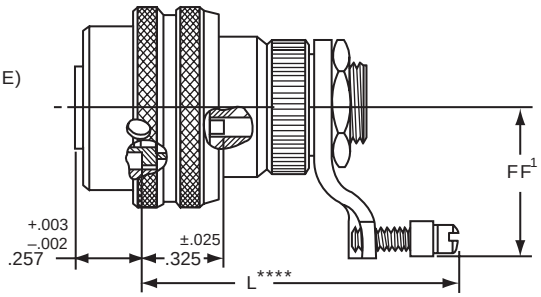

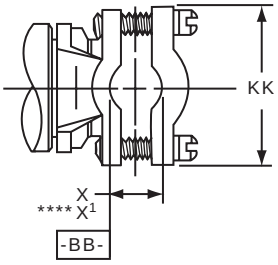

* To complete order number see page 53.
** High temperature version; to complete order number see page 53.
*** Clear iridite finish (gold color), N_2O_4 resistant; to complete order number see page 53.
**** Dimensions L and X^1 are applicable when the end of the screw is flush with the surface BB.

Shell Size	H ±.010	K ±.010	L Max.	L¹ Max.	Q Dia. Max.	X Min. Cable	X¹ Max. Cable	FF Max.	FF¹ Max.	KK Max.
8	.547	.156	1.578	1.125	.734	.082	.234	.438	.984	.755
10	.709	.188	1.578	1.156	.844	.082	.234	.516	1.016	.755
12	.829	.281	1.656	1.250	1.016	.114	.328	.594	1.078	.817
14	1.000	.438	1.844	1.406	1.141	.176	.457	.656	1.203	.943
16	1.021	.500	2.000	1.469	1.265	.238	.634	.719	1.265	1.067
18	1.145	.562	2.046	1.531	1.391	.208	.614	.781	1.328	1.149
20	1.270	.625	2.125	1.594	1.500	.302	.608	.844	1.359	1.399
22	1.395	.688	2.250	1.656	1.625	.302	.823	.906	1.421	1.399
24	1.520	.750	2.422	1.797	1.750	.332	.853	.969	1.703	1.587

All dimensions for reference only.

JT00 (MS27475) — hermetic
wall mounting receptacle

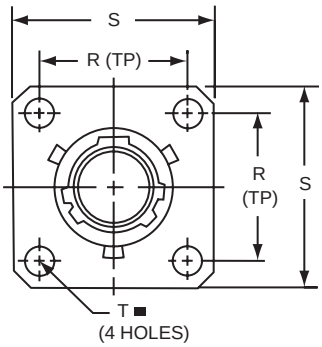

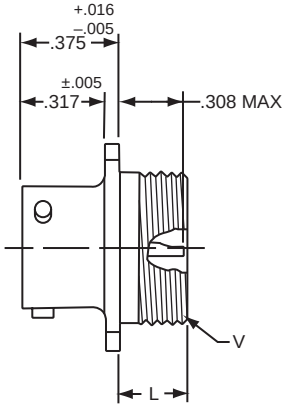

* JT00H-XX-XXX
** JT00Y-XX-XXX (MS27475YXXDXXX)
*** JTS00Y-XX-XXX (MS27482YXXEXXX)

■ ⊕ .005 DIA Ⓜ

* To complete order number see page 53.
** Interfacial seal wafer; to complete order number see page 53.
*** High temperature version, interfacial seal wafer with stainless steel shell; to complete order number see page 53.

Shell Size	L Max.	N +.001 –.005	R (TP)	S ±.016	T ±.005	V Thread Class 2A
8	.234	.473	.594	.812	.120	.5625-24UNEF
10	.234	.590	.719	.938	.120	.6875-24UNEF
12	.234	.750	.812	1.031	.120	.8125-20UNEF
14	.234	.875	.906	1.125	.120	.9375-20UNEF
16	.234	1.000	.969	1.219	.120	1.0625-18UNEF
18	.234	1.125	1.062	1.312	.120	1.1875-18UNEF
20	.234	1.250	1.156	1.438	.120	1.3125-18UNEF
22	.234	1.375	1.250	1.562	.120	1.4375-18UNEF
24	.313	1.500	1.375	1.688	.147	1.5625-18UNEF

All dimensions for reference only.

JT02 (MS27476) — hermetic
box mounting receptacle

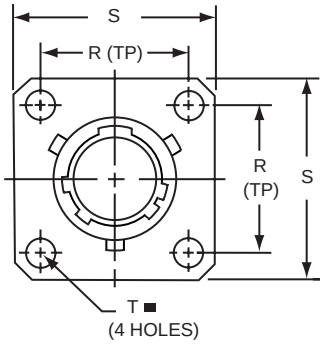

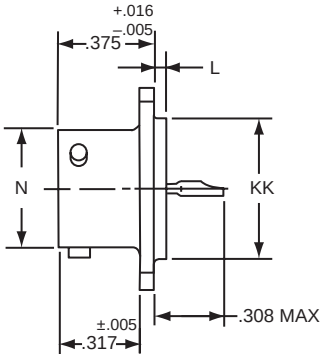

* JT02H-XX-XXX
** JT02Y-XX-XXX (MS27476YXXDXXX)
*** JTS02Y-XX-XXX (MS27476YXXEXXX)

■ ⊕ .005 DIA Ⓜ

* To complete order number see page 53.
** Interfacial seal wafer; to complete order number see page 53.
*** High temperature version, interfacial seal wafer with stainless steel shell; to complete order number see page 53.

Shell Size	L +.006 –.015	N +.001 –.005	R (TP)	S ±.016	T ±.005	KK +.001 –.005
8	.051	.473	.594	.812	.120	.562
10	.051	.590	.719	.938	.120	.672
12	.051	.750	.812	1.031	.120	.781
14	.051	.875	.906	1.125	.120	.906
16	.051	1.000	.969	1.219	.120	1.031
18	.051	1.125	1.062	1.312	.120	1.156
20	.051	1.250	1.156	1.438	.120	1.250
22	.080	1.375	1.250	1.562	.120	1.375
24	.080	1.500	1.375	1.688	.147	1.500

All dimensions for reference only.

JT07 (MS27477) — hermetic
jam nut receptacle

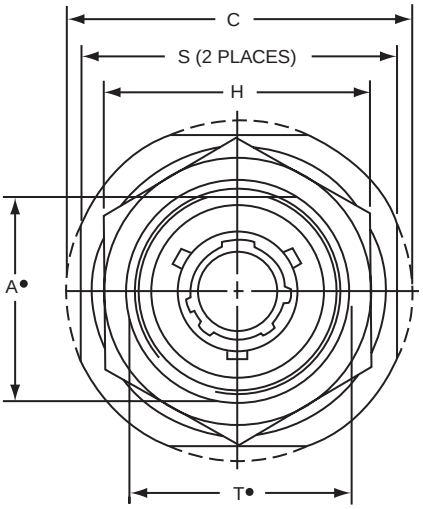

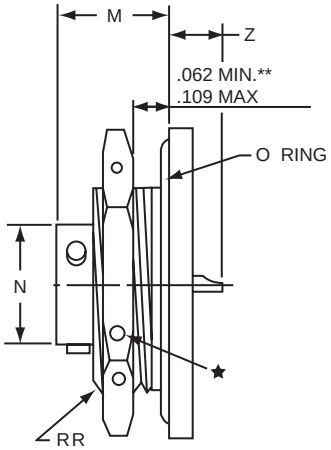

* JT07H-XX-XXX
*** JT07Y-XX-XX (MS27477YXXDXXX)
**** JTS07Y-XX-XXX (MS27483YXXEXXX)

★ .059 Dia. Min. 3 lockwire holes. Formed lockwire hole design (6 holes) is optional.
• "D" shaped mounting hole dimensions.
* To complete order number see page 53.
** Panel Thickness
*** Interfacial seal wafer; to complete order number see page 53.
**** High temperature version, interfacial seal wafer with stainless steel shell; to complete order number see page 53.

Shell Size	A• +.000 –.010	C Max.	H +.017 –.016	M ±.005	N +.001 –.005	S ±.016	T• +.010 –.000	Z Max.	RR Thread Class 2A
8	.830	1.390	1.062	.438	.473	1.250	.884	.244	.8750-20UNEF
10	.955	1.515	1.188	.438	.590	1.375	1.007	.244	1.0000-20UNEF
12	1.084	1.640	1.312	.438	.750	1.500	1.134	.244	1.1250-18UNEF
14	1.208	1.765	1.438	.438	.875	1.625	1.259	.244	1.2500-18UNEF
16	1.333	1.953	1.562	.438	1.000	1.781	1.384	.244	1.3750-18UNEF
18	1.459	2.031	1.688	.438	1.125	1.890	1.507	.244	1.5000-18UNEF
20	1.576	2.156	1.812	.464	1.250	2.016	1.634	.218	1.6250-18UNEF
22	1.701	2.280	2.000	.464	1.375	2.140	1.759	.218	1.7500-18UNS
24	1.826	2.405	2.125	.464	1.500	2.265	1.884	.218	1.8750-16UN

All dimensions for reference only.

JTI (MS27478) — hermetic
solder mounting receptacle

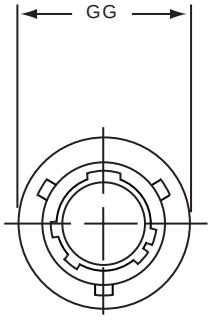

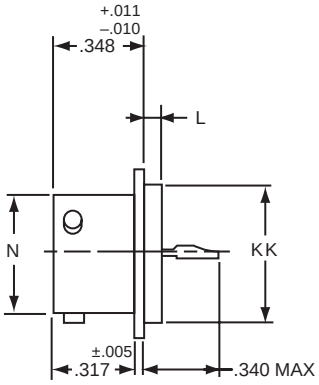

* JTIH-XX-XXX
** JTIY-XX-XX (MS27478YXXDXXX)
*** JTSIY-XX-XXX (MS27503YXXEXXX)

* To complete order number see page 53.
** Interfacial seal wafer; to complete order number see page 53.
*** High temperature version, interfacial seal wafer with stainless steel shell; to complete order number see page 53.

Shell Size	L +.011 –.010	N +.001 –.005	GG +.011 –.010	KK +.001 –.005
8	.078	.473	.687	.562
10	.078	.590	.797	.672
12	.078	.750	.906	.781
14	.078	.875	1.031	.906
16	.078	1.000	1.156	1.031
18	.078	1.125	1.281	1.156
20	.078	1.250	1.375	1.250
22	.107	1.375	1.500	1.375
24	.107	1.500	1.625	1.500

All dimensions for reference only.
Weld mounting hermetic receptacle also available. Consult Amphenol, Sidney, NY for availability and dimensions.

JT — accessories
plug protection cap

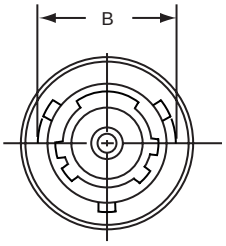

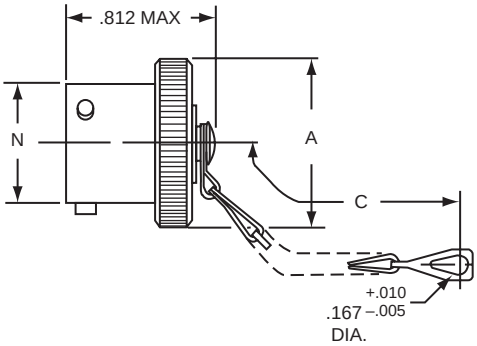

* 10-547138-XXX (MS27510XXC)

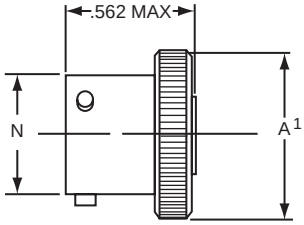

* 10-241853-XXX (MS27352XXX)

For MS stamping identification, accessories must be ordered by MS part number.
If ordered by 10- part number, they will be stamped with said number.
* To complete order number, add shell size and suffix number.
For example, shell size 10 with cadmium plate, nickel base would be 10-241801-107, MS27510A10C or MS27352A10.

Shell Size	A Dia. Max.	A[1] Dia. Max.	B +.000 –.016	C Approx.	N Dia. +.001 –.005
8	.719	.703	.563	3.000	.473
10	.844	.828	.680	3.000	.590
12	1.000	.984	.859	3.500	.750
14	1.125	1.109	.984	3.500	.875
16	1.250	1.234	1.108	3.500	1.000
18	1.375	1.359	1.233	3.500	1.125
20	1.500	1.484	1.358	4.000	1.250
22	1.625	1.609	1.483	4.000	1.375
24	1.750	1.734	1.610	4.000	1.500

All dimensions for reference only.

Finish	10- Number Suffix	MS Number Suffix with chain	MS Number Suffix without chain
Chromate treat	-XX0		
Anodic coating	-XX5	CXXC	CXX
Cadmium plate nickel base	-XX7	AXXC	AXX
Olive drab, cadmium, nickel base	-XX9	BXXC	BXX
Electroless nickel		-XXG	FXXC

FXX

JT — accessories
receptacle protection cap

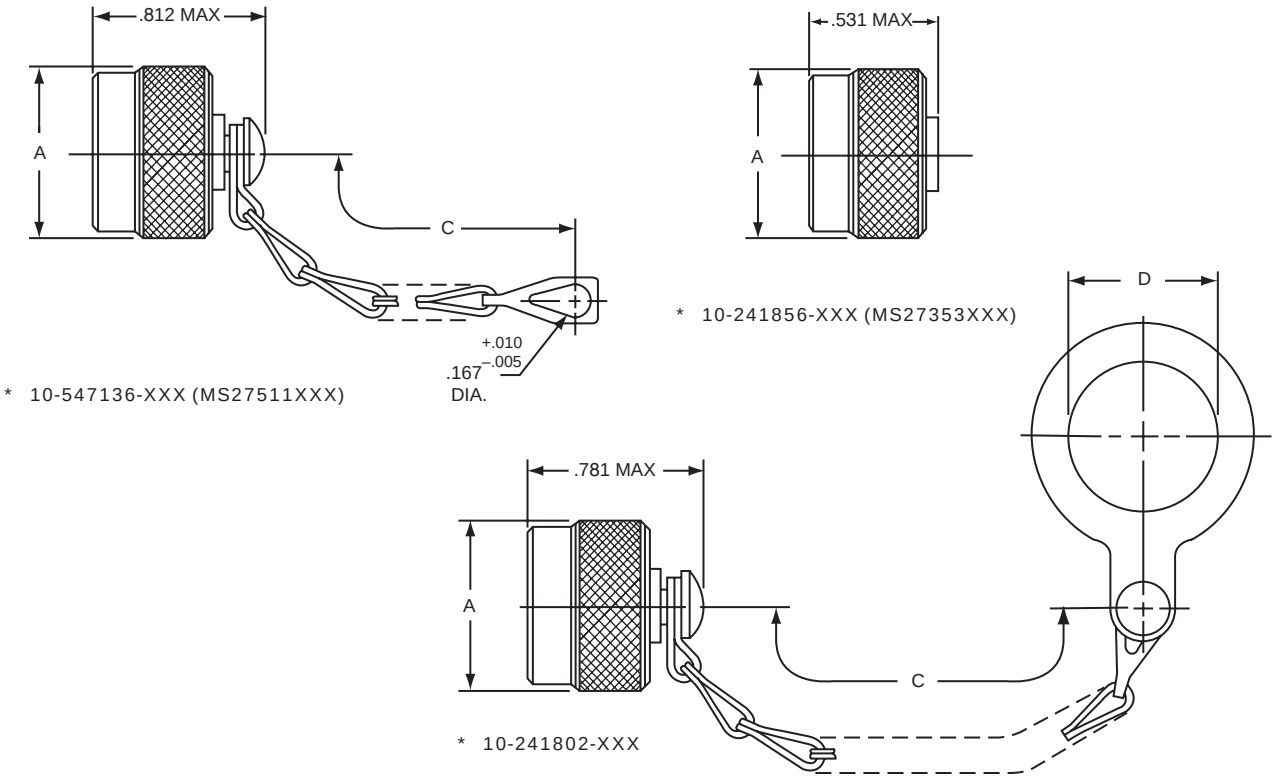

For MS stamping identification, accessories must be ordered by MS part number.
If ordered by 10- part number, they will be stamped with said number.
* To complete order number, add shell size and suffix number.
For example, shell size 10 with cadmium plate, nickel base would be 10-241800-107, MS27511A10C or MS27353A10.

Shell Size	A Dia. Max.	C Approx.	D +.010 –.000
8	.719	3.000	.891
10	.844	3.000	1.016
12	1.000	3.500†	1.141
14	1.125	3.500	1.266
16	1.250	3.500	1.391
18	1.375	3.500	1.516
20	1.500	4.000	1.641
22	1.625	4.000	1.766
24	1.750	4.000	1.891

† 3.000 for MS27511
All dimensions for reference only.

Finish	10- Number Suffix	MS Number Suffix with chain	MS Number Suffix without chain
Chromate treat	-XX0		
Anodic coating	-XX5	CXXC	CXX
Cadmium plate nickel base	-XX7	AXXC	AXX
Olive drab, cadmium, nickel base	-XX9	BXXC	BXX
Electroless nickel		-XXG	FXXC

FXX

JT/LJT — accessories
strain relief (crimp type)

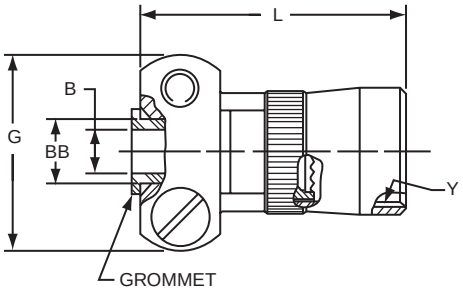

* 10-405982-XXX (MS27506XXX-2 reference M85049/49)

For MS stamping identification, accessories must be ordered by MS part number.
If ordered by 10-part number, they will be stamped with said number.

*To complete order number, add shell size and suffix number.

Finish	10-Number Suffix	MS27506 Suffix	M85049/49 Suffix
Chromate treat	-XX0		NA
Anodic coating	-XX5	CXX-2	(-2-XXA)
Cadmium plate nickel base	-XX7	AXX-2	NA
Olive drab, cadmium, nickel base	-XX9	BXX-2	(-2-XXW)
Electroless nickel	-XXG	FXX-2	(-2-XXN)

For example: Shell size 10 with cadmium plate, nickel base would be 10-405982-107
or M85049/49-2-10W

Shell Size	B Dia. +.010 –.025	G Max.	L Max.	Y Thread (Modified) Size Class 2B	Y Thread (Modified) Modified Minor Dia.	BB Dia. +.000 –.011	Screw Size
8	.125	.775	.984	.4375-28UNEF	.399 – .405	.250	6-32UNC
10	.188	.837	.984	.5625-24UNEF	.524 – .529	.312	6-32UNC
12	.312	.963	.984	.6875-24UNEF	.649 – .654	.438	6-32UNC
14	.375	1.087	1.234	.8125-20UNEF	.766 – .771	.562	6-32UNC
16	.500	1.150	1.234	.9375-20UNEF	.891 – .896	.625	6-32UNC
18	.625	1.400	1.234	1.0625-18UNEF	1.002 – 1.007	.750	8-32UNC
20	.625	1.400	1.234	1.1875-18UNEF	1.135 – 1.140	.750	8-32UNC
22	.750	1.587	1.359	1.3125-18UNEF	1.252 – 1.257	.938	8-32UNC
24	.800	1.681	1.281	1.4375-18UNEF	1.377 – 1.382	1.000	8-32UNC

All dimensions for reference only.
Note: For solder type cable clamp 10-241055-XXX (M85049/49) consult Amphenol, Sidney, NY.

LJT00R (MS27466) — crimp
wall mounting receptacle

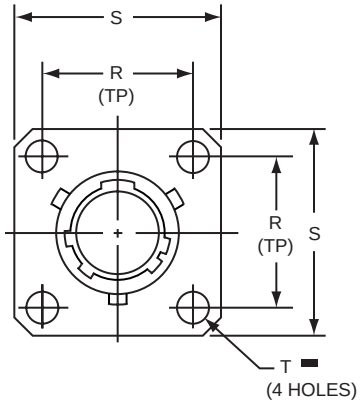

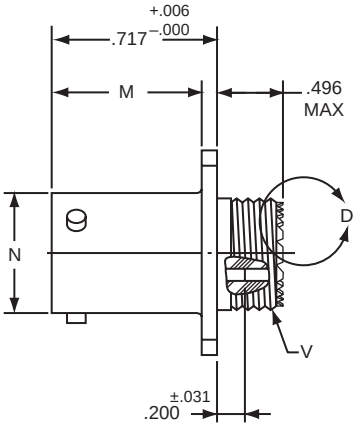

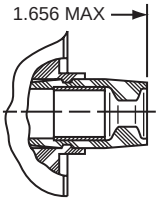

VIEW D ENLARGED
FOR COAXIAL USE ONLY

*LJT00RE-XX-XXX (MS27466E)
*LJT00RT-XX-XXX (MS27466T)

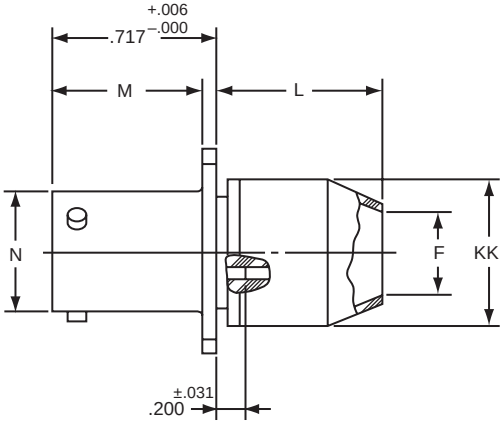

*LJT00RP-XX-XXX (MS27466P)

▬ ⊕ .005 DIA Ⓜ

* To complete order number see page 53.

Shell Size	F Dia.	L Max.	M +.000 –.005	N +.001 –.005	R (TP)	S ±.016	T Dia. ±.005	V Thread Class 2A (Plated)	KK Dia. Max.
9	.444	.813	.632	.572	.719	.938	.128	.4375-28 UNEF	.608
11	.558	.813	.632	.700	.812	1.031	.128	.5625-24 UNEF	.734
13	.683	.813	.632	.850	.906	1.125	.128	.6875-24 UNEF	.858
15	.808	.813	.632	.975	.969	1.219	.128	.8125-20 UNEF	.984
17	.909	.813	.632	1.100	1.062	1.312	.128	.9375-20 UNEF	1.110
19	1.034	.813	.632	1.207	1.156	1.438	.128	1.0625-18 UNEF	1.234
21	1.159	.906	.602	1.332	1.250	1.562	.128	1.1875-18 UNEF	1.360
23	1.284	.906	.602	1.457	1.375	1.688	.147	1.3125-18 UNEF	1.484
25	1.409	.906	.602	1.582	1.500	1.812	.147	1.4375-18 UNEF	1.610

All dimensions for reference only.

LJTPQ00R (MS27656) — crimp
wall mounting receptacle (back panel mounting)

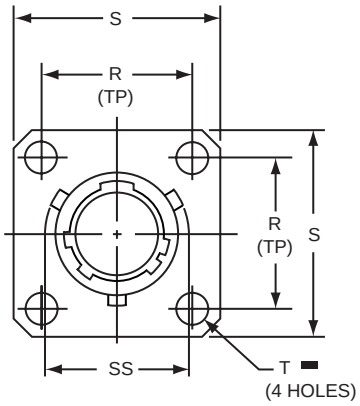

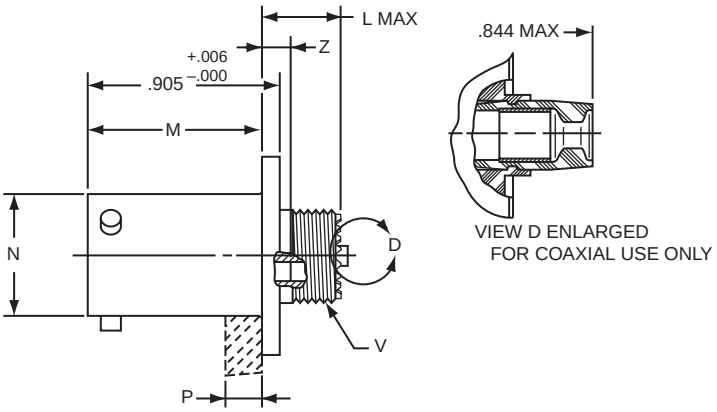

* LJTPQ00RE-XX-XXX (MS27656E)
* LJTPQ00RT-XX-XXX (MS27656T)

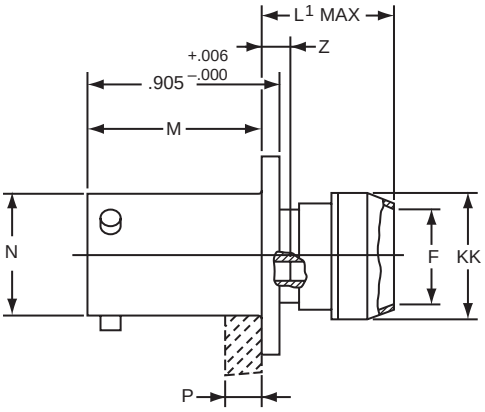

* LJTPQ00RP-XX-XXX (MS27656P)

▬ ⊕ .005 DIA Ⓜ

* To complete order number see page 53.

Shell Size	F Dia. ±.010	L Max.	L[1] Max.	M +.000 –.005	N Dia.	P Max Panel Thickness	R (TP)	S +.011 –.010	T Dia. ±.005	V Thread Class 2A (Plated)	Z Max	KK Dia. Max	SS Dia. +.000 –.016
9	.444	.453	.641	.820	.572	.234	.719	.938	.128	.4375-28 UNEF	.138	.625	.662
11	.558	.453	.641	.820	.700	.234	.812	1.031	.128	.5625-24 UNEF	.138	.750	.810
13	.683	.453	.641	.820	.850	.234	.906	1.125	.128	.6875-24 UNEF	.138	.875	.960
15	.808	.453	.641	.820	.975	.234	.969	1.219	.128	.8125-20 UNEF	.138	1.000	1.085
17	.909	.453	.641	.820	1.100	.234	1.062	1.312	.128	.9375-20 UNEF	.138	1.125	1.210
19	1.034	.453	.641	.820	1.207	.234	1.156	1.438	.128	1.0625-18 UNEF	.138	1.250	1.317
21	1.159	.484	.672	.790	1.332	.204	1.250	1.562	.128	1.1875-18 UNEF	.168	1.375	1.442
23	1.284	.484	.672	.790	1.457	.204	1.375	1.688	.147	1.3125-18 UNEF	.168	1.500	1.567
25	1.409	.484	.672	.790	1.582	.193	1.500	1.812	.147	1.4375-18 UNEF	.168	1.625	1.692

All dimensions for reference only.
Note: MS27656 superseded MS 27515.

LJT01R — crimp
line receptacle

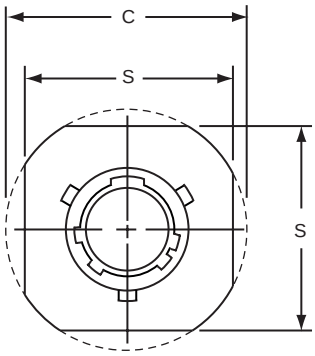

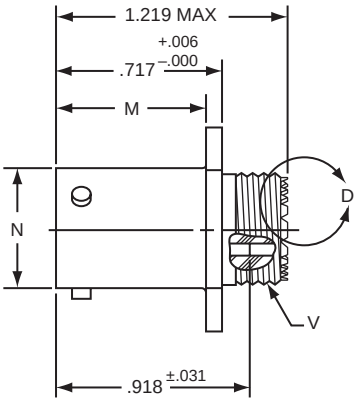

* LJT01RE-XX-XXX
* LJT01RT-XX-XXX

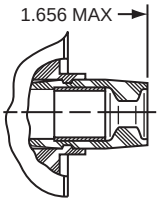

VIEW D ENLARGED
FOR COAXIAL USE ONLY

* To complete order number see page 53.

Shell Size	C Max.	M +.000 –.005	N +.001 –.005	S ±.016	V Thread Ref. Class 2A (Plated)
9	1.094	.632	.572	.938	.4375-28 UNEF
11	1.188	.632	.700	1.031	.5625-24 UNEF
13	1.281	.632	.850	1.125	.6875-24 UNEF
15	1.375	.632	.975	1.219	.8125-20 UNEF
17	1.469	.632	1.100	1.312	.9375-20 UNEF
19	1.594	.632	1.207	1.438	1.0625-18 UNEF
21	1.719	.602	1.332	1.562	1.1875-18 UNEF
23	1.844	.602	1.457	1.688	1.3125-18 UNEF
25	1.969	.602	1.582	1.812	1.4375-18 UNEF

All dimensions for reference only.

LJT02R (MS27496) — crimp
box mounting receptacle
LJTP02R (MS27505) — crimp
box mounting receptacle (back panel mounting)

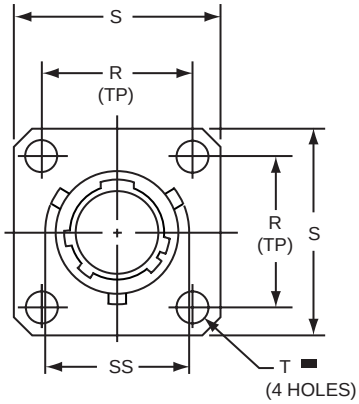

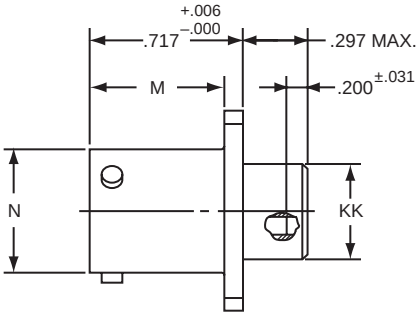

* LJT02RE-XX-XXX (MS27496E)

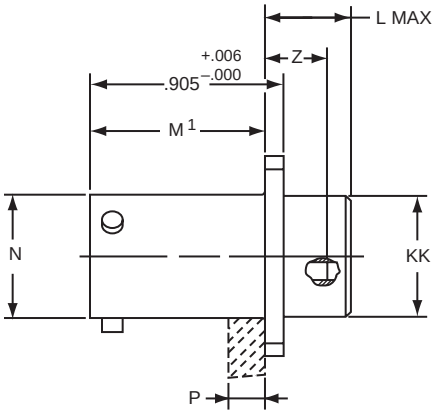

* LJTP02RE-XX-XXX (MS27505E)

■ ⊕ .005 DIA Ⓜ

* To complete order number see page 53.

Shell Size	L Max.	M +.000 –.005	M[1] +.001 –.005	N Dia. +.001 –.005	P Max. Panel Thickness	R (TP)	S +.011 –.010	T Dia. ±.005	Z ±.031	KK Dia. +.006 –.005	SS Dia. +.000 –.016
9	.203	.632	.820	.572	.234	.719	.938	.128	.107	.433	.662
11	.203	.632	.820	.700	.234	.812	1.031	.128	.107	.557	.810
13	.203	.632	.820	.850	.234	.906	1.125	.128	.107	.676	.960
15	.203	.632	.820	.975	.234	.969	1.219	.128	.107	.801	1.085
17	.203	.632	.820	1.100	.234	1.062	1.312	.128	.107	.926	1.210
19	.203	.632	.820	1.207	.234	1.156	1.438	.128	.107	1.032	1.317
21	.234	.602	.790	1.332	.204	1.250	1.562	.128	.137	1.157	1.442
23	.234	.602	.790	1.457	.204	1.375	1.688	.147	.137	1.282	1.567
25	.234	.602	.790	1.582	.193	1.500	1.812	.147	.137	1.407	1.692

All dimensions for reference only.

LJT06R (MS27467) — crimp
straight plug

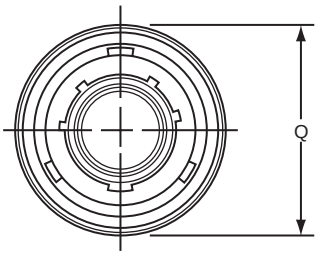

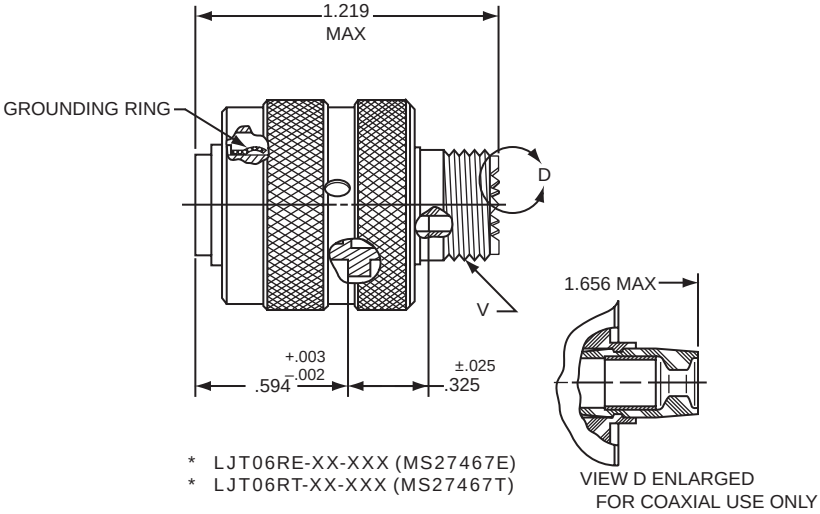

* LJT06RE-XX-XXX (MS27467E)
* LJT06RT-XX-XXX (MS27467T)

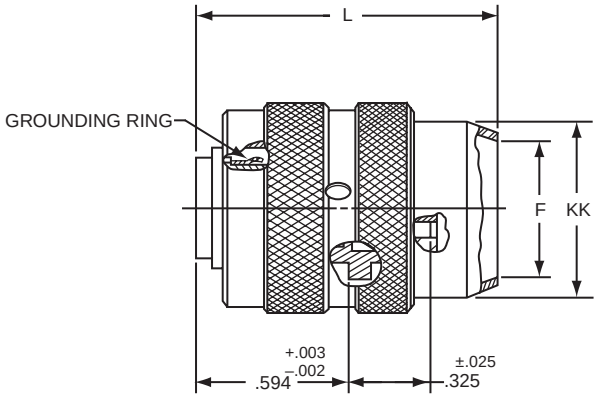

* LJT06RP-XX-XXX (MS27467P)

* To complete order number see page 53.

Shell Size	F Dia.	L Max.	Q Max.	V Thread Class 2A (Plated)	KK Dia. Max.
9	.444	1.531	.844	.4375-28 UNEF	.608
11	.528	1.531	.969	.5625-24 UNEF	.734
13	.683	1.531	1.141	.6875-24 UNEF	.858
15	.808	1.531	1.266	.8125-20 UNEF	.984
17	.909	1.531	1.391	.9375-20 UNEF	1.110
19	1.034	1.531	1.500	1.0625-18 UNEF	1.234
21	1.159	1.625	1.625	1.1875-18 UNEF	1.360
23	1.284	1.625	1.750	1.3125-18 UNEF	1.484
25	1.409	1.625	1.875	1.4375-18 UNEF	1.610

All dimensions for reference only.

LJT07R (MS27468) — crimp
jam nut receptacle

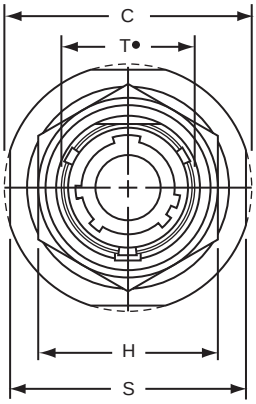

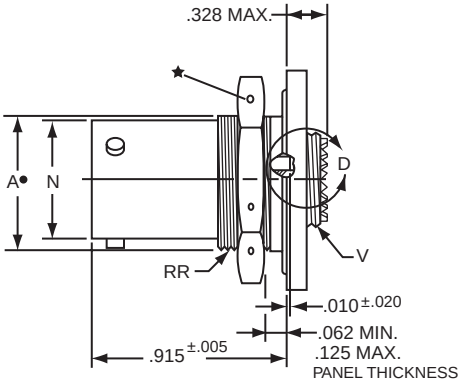

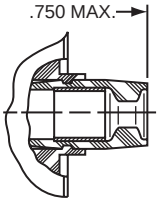

VIEW D ENLARGED
FOR COAXIAL USE ONLY

* LJT07RE-XX-XXX (MS27468E)
* LJT07RT-XX-XXX (MS27468T)

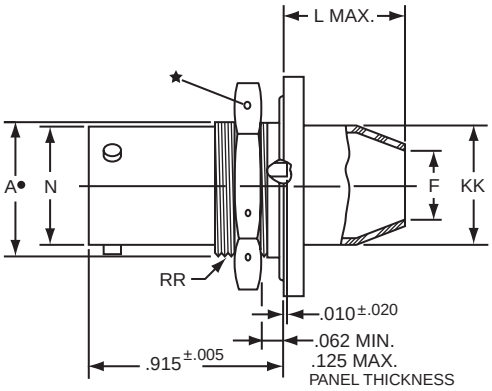

* LJT07RP-XX-XXX (MS27468P)

★ .059 Dia. Min. 3 lockwire holes.
Formed lockwire hole design (6 holes) is optional.

• "D" shaped mounting hole dimensions.

* To complete order number see page 53.

Shell Size	A• +.000 –.010	C Max.	F Dia.	H Hex +.017 –.016	L Max.	N +.001 –.005	S ±.016	T• +.010 –.000	V Thread Class 2A (Plated)	KK Dia. Max.	RR Thread Class 2A (Plated)
9	.669	1.199	.444	.875	.625	.572	1.062	.697	.4375-28 UNEF	.608	.6875-24 UNEF
11	.769	1.386	.558	1.000	.625	.700	1.250	.822	.5625-24 UNEF	.734	.8125-20 UNEF
13	.955	1.511	.683	1.188	.625	.850	1.375	1.007	.6875-24 UNEF	.858	1.0000-20 UNEF
15	1.084	1.636	.808	1.312	.625	.975	1.500	1.134	.8125-20 UNEF	.984	1.1250-18 UNEF
17	1.208	1.761	.909	1.438	.625	1.100	1.625	1.259	.9375-20 UNEF	1.110	1.2500-18 UNEF
19	1.333	1.949	1.034	1.562	.656	1.207	1.812	1.384	1.0625-18 UNEF	1.234	1.3750-18 UNEF
21	1.459	2.073	1.159	1.688	.750	1.332	1.938	1.507	1.1875-18 UNEF	1.360	1.5000-18 UNEF
23	1.580	2.199	1.284	1.812	.750	1.457	2.062	1.634	1.3125-18 UNEF	1.484	1.6250-18 UNEF
25	1.709	2.323	1.409	2.000	.750	1.582	2.188	1.759	1.4375-18 UNEF	1.610	1.7500-18 UNS

All dimensions for reference only.

LJT00 (MS27469) — hermetic
wall mounting receptacle

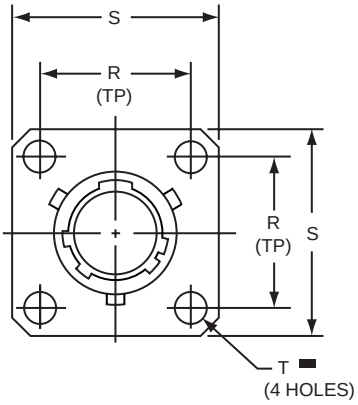

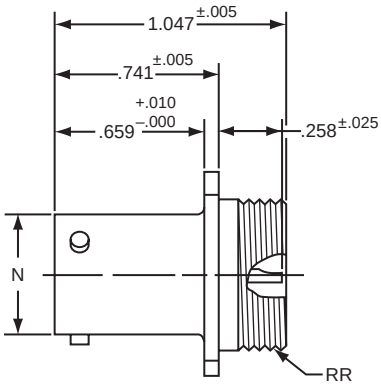

* LJT00H-XX-XXX
** LJT00Y-XX-XXX (MS27469YXXD)
*** LJTS00Y-XX-XXX (MS27469YXXE)

■ ⊕ .005 DIA Ⓜ

* To complete order number see page 53.
** Interfacial seal wafer; to complete order number see page 53.
*** High temperature version, interfacial seal wafer with stainless steel shell; to complete order number see page 53.

Shell Size	N Dia. +.001 –.005	R (TP)	S ±.016	T Dia. ±.005	RR Thread Class 2A
9	.572	.719	.938	.128	.6875-24 UNEF
11	.700	.812	1.031	.128	.8125-20 UNEF
13	.850	.906	1.125	.128	.9375-20 UNEF
15	.975	.969	1.219	.128	1.0625-18 UNEF
17	1.100	1.062	1.312	.128	1.1875-18 UNEF
19	1.207	1.156	1.438	.128	1.3125-18 UNEF
21	1.332	1.250	1.562	.128	1.4375-18 UNEF
23	1.457	1.375	1.688	.147	1.5625-18 UNEF
25	1.582	1.500	1.812	.147	1.6875-18 UNEF

All dimensions for reference only.

LJT07 (MS27470) — hermetic
jam nut receptacle

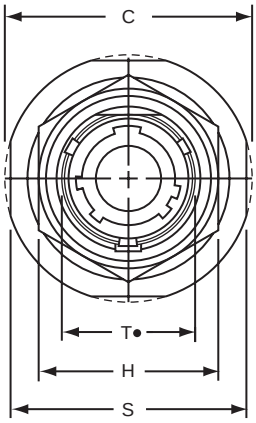

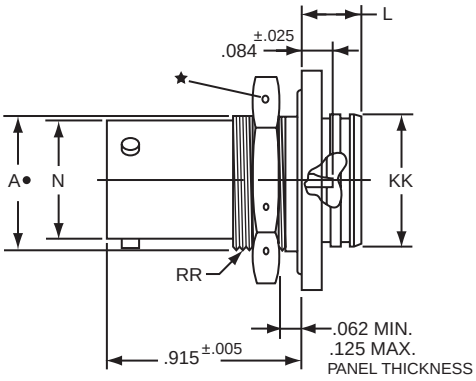

* LJT07H-XX-XXX
** LJT07Y-XX-XXX (MS27470YXXD)
*** LJTS07Y-XX-XXX (MS27470YXXE)

★ .059 Dia. Min. 3 lockwire holes.
Formed lockwire hole design (6 holes) is optional.
• "D" shaped mounting hole dimensions.
* To complete order number see page 53.
** Interfacial seal wafer; to complete order number see page 53.
*** High temperature version, interfacial seal wafer with stainless steel shell, to complete order number see page 53.

Shell Size	A• +.000 –.010	C Max.	H Hex +.017 –.016	L Max	N +.000 –.005	S ±.016	T• +.010 –.000	KK +.011 –.000	RR Thread Class 2A (Plated)
9	.669	1.199	.875	.297	.572	1.062	.697	.642	.6875-24 UNEF
11	.769	1.386	1.000	.297	.700	1.250	.822	.766	.8125-20 UNEF
13	.955	1.511	1.188	.297	.850	1.375	1.007	.892	1.0000-20 UNEF
15	1.084	1.636	1.312	.297	.975	1.500	1.134	1.018	1.1250-18 UNEF
17	1.208	1.761	1.438	.297	1.100	1.625	1.259	1.142	1.2500-18 UNEF
19	1.333	1.949	1.562	.328	1.207	1.812	1.384	1.268	1.3750-18 UNEF
21	1.459	2.073	1.688	.328	1.332	1.938	1.507	1.392	1.5000-18 UNEF
23	1.580	2.199	1.812	.328	1.457	2.062	1.634	1.518	1.6250-18 UNEF
25	1.709	2.328	2.000	.328	1.582	2.188	1.759	1.642	1.7500-18 UNS

All dimensions for reference only.

LJTI (MS27471) — hermetic
solder mounting receptacle

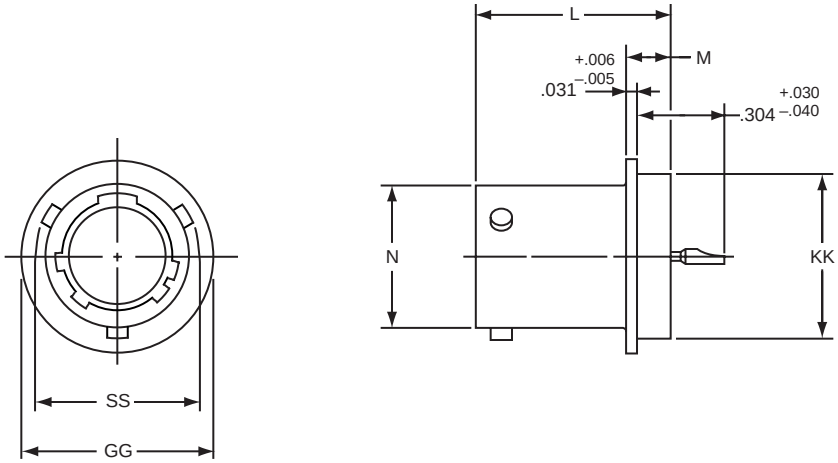

* LJTIH-XX-XXX
** LJTIY-XX-XXX (MS27471YXXD)
*** LJTSIY-XX-XXX (MS27471YXXE)

* To complete order number see page 49.
** Interfacial seal wafer; to complete order number see page 49.
*** High temperature version, interfacial seal wafer with stainless steel shell; to complete order nunmber see page 49.

Shell Size	N Dia. +.001 –.005	SS Dia. +.000 –.016	L +.011 –.000	M +.006 –.005	GG Dia. +.011 –.010	KK Dia. +.001 –.005
9	.572	.662	.789	.125	.750	.672
11	.700	.810	.789	.125	.844	.781
13	.850	.960	.789	.125	.969	.906
15	.975	1.085	.789	.125	1.094	1.031
17	1.100	1.210	.789	.125	1.218	1.156
19	1.207	1.317	.789	.125	1.312	1.250
21	1.332	1.442	.789	.125	1.438	1.375
23	1.457	1.567	.821	.156	1.563	1.500
25	1.582	1.692	.821	.156	1.688	1.625

All dimensions for reference only.
Weld mounting hermetic receptacle also available. Consult Amphenol, Sidney, NY for availability and dimensions.

LJT Breakaway Fail Safe
quick-disconnect with an axial pull of lanyard

Amphenol LJT Breakaway Fail Safe Connectors provide unequalled performance in environments requiring instant disengagement.

Designed to provide quick disconnect of a connector plug and receptacle with an axial pull on the lanyard, the "Breakaway" Fail Safe connector family offers a wide range of electrical and mechanical features:

- Instant decoupling and damage free separation
- Completely intermateable with standard LJT receptacles
- Inventory support commonality through the use of standard insert arrangements and contacts

Breakaway un-mating is initiated by applying a pull force to the lanyard which causes the operating sleeve on the plug to move away from the receptacle. Coupling segments on the plug then move away from the mating receptacle while expanding, thus releasing the receptacle. After completion of the un-mating sequence, spring compression returns the sleeve and segments to their original positions. Un-mating of the plug may also be accomplished by normal rotation of the coupling ring without affecting the breakaway capability.

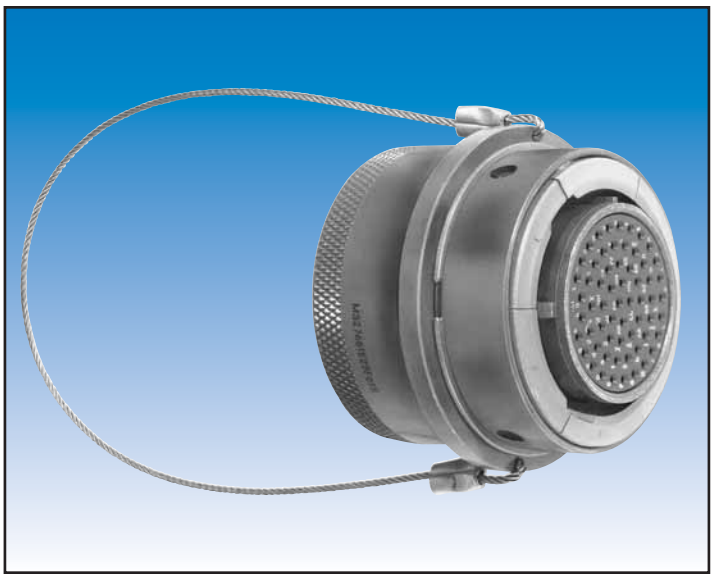

The LJT Breakaway Fail Safe connector features which provide EMI/EMP shielding in excess of MIL-DTL-38999 Series I requirements:

- Solid metal-to-metal coupling
- EMI grounding fingers
- Conductive finishes

In addition to standard Breakaway connectors, Amphenol also manufactures custom breakaway connectors including those with:

- Increased pull-force capability
- Custom lanyard lengths and backshells
- Low force separation capabilities
- Low insertion/separation force contacts
- Non-cadmium finishes
- Custom JT Series Breakaway designs have been developed for special applications; however the LJT Series is recommended over the JT Series for the quick-disconnect breakaway style.

Contact Amphenol Aerospace for more information on breakaway, quick-disconnect connectors. Other Amphenol cylindrical families (MIL-DTL-38999 Series III, MIL-C-26482, MIL-C-83723) also offer breakaway quick-disconnect connectors.

LJT Fail Safe 88-5388/91-5388 (MS27661)
lanyard release plug

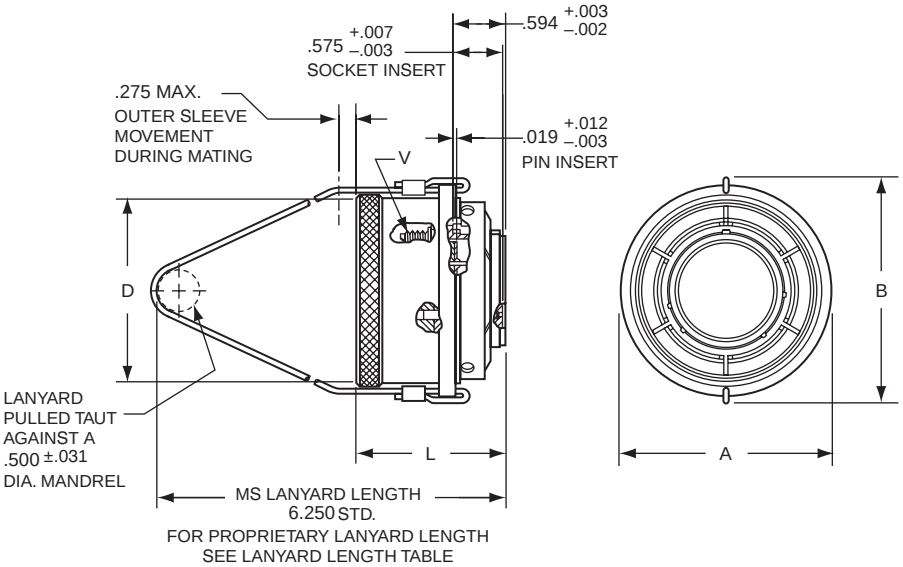

* To complete order number see page 40-41.

Shell Size	A Dia. Max.	B Max.	D Max. Accessory Dia.	L Max.	V Thread UNEF Class 2A (Plated)
11	1.393	1.797	.740	1.703	.5625-24
13	1.558	1.969	.926	1.703	.6875-24
15	1.669	2.078	1.051	1.703	.8125-20
17	1.797	2.203	1.176	1.703	.9375-20
19	1.926	2.323	1.300	1.703	1.0625-18
21	2.054	2.469	1.426	1.703	1.1875-18
23	2.183	2.594	1.551	1.703	1.3125-18
25	2.293	2.703	1.676	1.766	1.4375-18

All dimensions for reference only.

LJT Breakaway Fail Safe
lanyard release plug insert availability, how to order

INSERT AVAILABILITY

Insert Arrangement	Service Rating	Total Contacts	Contact Size 22D	20	16	12	12 Coax	8 Coax*	8 Twinax
11-2	I	2			2				
11-35	M	13	13						
11-98	I	6		6					
13-4	I	4			4				
13-8	I	8		8					
13-35	M	22	22						
13-98	I	10		10					
15-5	II	5			5				
15-15	I	15		14	1				
15-18	I	18		18					
15-19	I	19		19					
15-35	M	37	37						
15-97	I	12		8	4				
17-6	I	6				6			
17-8	II	8			8				
17-26	I	26		26					
17-35	M	55	55						
17-99	I	23		21	2				
19-11	II	11			11				
19-32	I	32		32					
19-35	M	66	66						
21-11	I	11				11			
21-16	II	16			16				
21-35	M	79	79						
21-39	I	39		37	2				
21-41	I	41		41					
23-21	II	21			21				
23-35	M	100	100						
23-53	I	53		53					
23-54	M	53	40		9	4			
23-55	I	55		55					
25-4	I	56		48	8				
25-19	I	19				19			
25-20	N	30		10	13		4		3
25-24	I	24			12	12			
25-29	I	29			29				
25-35	M	128	128						
25-43	I	43		23	20				
25-46	I	46		40	4			2*	
25-61	I	61		61					

LJT Lanyard Separation Forces		
Shell Size	Straight Pull (lbs. max.)	15 Degree Pull (lbs. max.)
11 13 15	45	55
17 19 21 23 25	90	100

* For RG 180/U and RG 195/U cables only. (Check Amphenol Aerospace, Sidney, NY for other cable applications.

For availability of other insert arrangements and accessories consult Amphenol Aerospace.

TABLE I
INSERT ARRANGEMENT CODE

Basic Part Number	MIL-DTL-38999 Insert Arrangement
88/91-538808	11-2
06	11-35
07	11-98
10	13-4
11	13-8
13	13-98
14	13-35
18	15-5
23	15-15
22	15-18
19	15-19
20	15-35
27	17-6
28	17-8
29	17-26
30	17-35
31	17-99
37	19-11
39	19-32
40	19-35
47	21-11
48	21-16
49	21-35
50	21-41
51	21-39
57	23-21
58	23-35
59	23-53
61	23-54
60	23-55
66	25-19
74	25-20
67	25-29
68	25-35
69	25-43
70	25-61
71	25-4
72	25-24

TABLE II
LANYARD LENGTH CODES

Lanyard Length (in.) ± .250	MS	Proprietary Code
4.000	No Code Std. Length 6.250	40
4.250		41
4.500		42
4.750		43
5.000		50
5.250		51
5.500		52
5.750		53
6.000		60
6.250		61
6.500		62
6.750		63
7.000		70
7.250		71
7.500		72
7.750		73
8.000		80
8.250		81
8.500		82
8.750		83
9.000		90
9.250		91
9.500		92
9.750		93

LJT Breakaway Fail Safe
lanyard release plug
how to order, cont.

HOW TO ORDER - BY MILITARY PART NUMBER FAIL SAFE MS27661

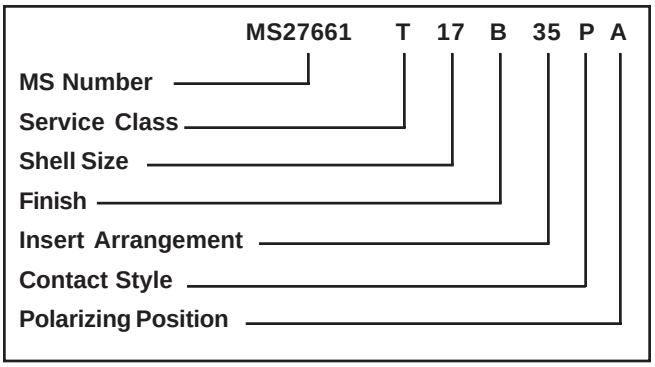

MS Number

MS Number designates MIL-DTL-38999, Series I LJT Lanyard Release Plug

Service Class

E for environmental crimp applications (inactive for new design)
T for environmental crimp applications with serrations on rear threads of shell

Shell Size

MIL-DTL-38999, sizes 11 through 25

Finish

B designates corrosion resistant olive drab cadmium plated aluminum, 500 hour extended salt spray, EMI shielding effectiveness –50dB @ 10 GHz specification min., 175°C
F designates electroless nickel plated aluminum, 48 hour salt spray, EMI shielding effectiveness –65dB @ 10 GHz500 specification min., 200°C
These are standard finishes. Consult Amphenol Aerospace for variations.

Insert Arrangement

MIL-DTL-38999, see insert identification chart on page 40.

Contact Style

P designates Lanyard Release plug with pin contacts
S designates Lanyard Release plug with socket contacts

Polarizing Postion

For alternate positions of connector (to prevent cross-mating) see LJT key/keyway rotation description on page 5. (No letter is required for normal).

HOW TO ORDER - BY PROPRIETARY PART NUMBER FAIL SAFE 88-5388 OR 91-5388

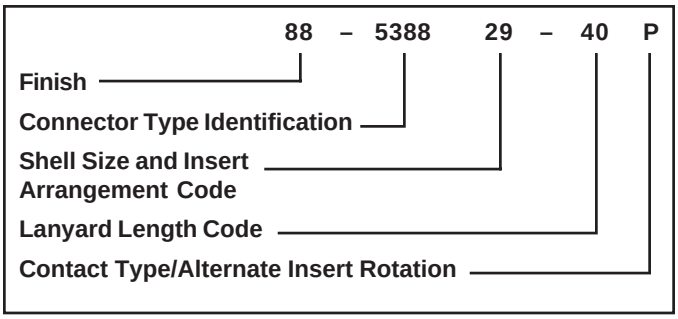

Finish

88 designates corrosion resistant olive drab cadmium plate over nickel, 500 hour extended salt spray, EMI –50dB @ 10 GHz specification min., 175°C

91 designates electroless nickel plated aluminum, optimum EMI shielding effectiveness –65dB @ 10 GHz specification min., 48 hour salt spray, 200°C
These are standard finishes. Consult Amphenol Aerospace, Sidney, NY for variations.

Connector Type Identification

88/91-5388 designates MIL-DTL-38999, Series I LJT Lanyard Release Plug

Shell Size and Insert Arrangement Code

Shell sizes are MIL-DTL-38999, Series III from 11 thru 25. The basic part number selected specifies the insert arrangement. See Table I (page 40) for coded part number that correlates to insert arrangement.

Lanyard Length Code

See Table II (page 40) for lanyard length code number.

Contact Type/Alternate Rotations

P designates pin, S designates socket for normal positioning of contacts. When an alternate position of the connector is required to prevent cross-mating, a different letter (other than P or S) is used. See alternate positioning for LJT on page 5, then convert to Amphenol proprietary coding by the following chart.

Pin Contacts		Socket Contacts	
MS Letter	Amphenol Letter	MS Letter	Amphenol Letter
P	P (normal)	S	S (normal)
PA	E	SA	F
PB	R	SB	T
PC	W	SC	X
PD	Y	SD	Z

LJT — accessories
plug protection cap

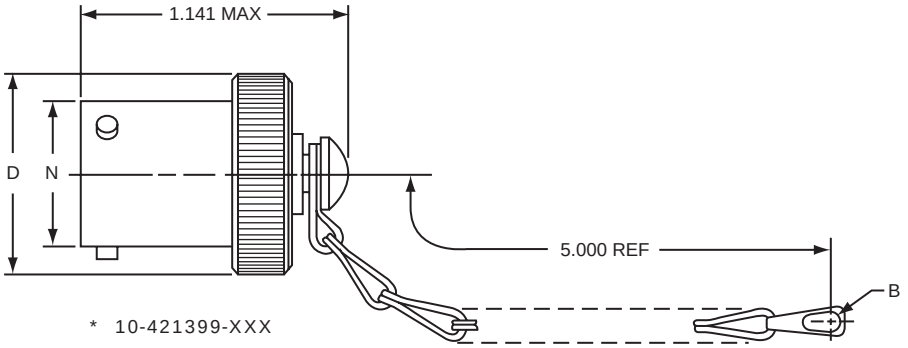

* 10-421399-XXX

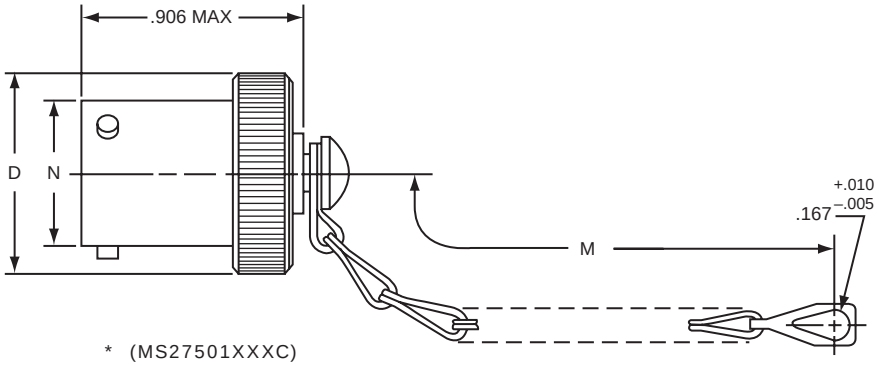

* (MS27501XXXC)

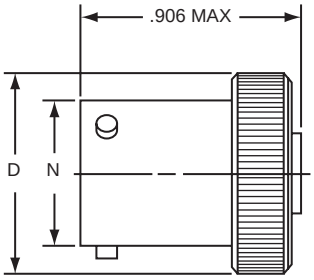

* 10-275196-XXX (MS27501)

* To complete order number, add shell size and suffix number.
For example, shell size 11 with cadmium plate, nickel base would be 10-421399-117, MS27501A11C or MS20048A11.

Shell Size	B Dia. Ref	D Dia. Max	M ±.250	N Dia. +.001 –.005
9	.180	.812	3.000	.572
11	.180	.938	3.000	.700
13	.180	1.062	3.500	.850
15	.180	1.188	3.500	.975
17	.180	1.312	3.500	1.100
19	.209	1.438	3.500	1.207
21	.209	1.562	4.000	1.332
23	.209	1.688	4.000	1.457
25	.209	1.812	4.000	1.582

All dimensions for reference only.

Finish	10-Number Suffix	MS Number Suffix with chain	MS Number Suffix without chain
Chromate treat	-XX0		
Anodic coating	-XX5		
Cadmium plate nickel base	-XX7	AXXC	AXX
Olive drab, cadmium, nickel base	-XX9	BXXC	BXX
Electroless nickel		-XXG	FXXC

FXX

LJT — accessories
receptacle protection cap

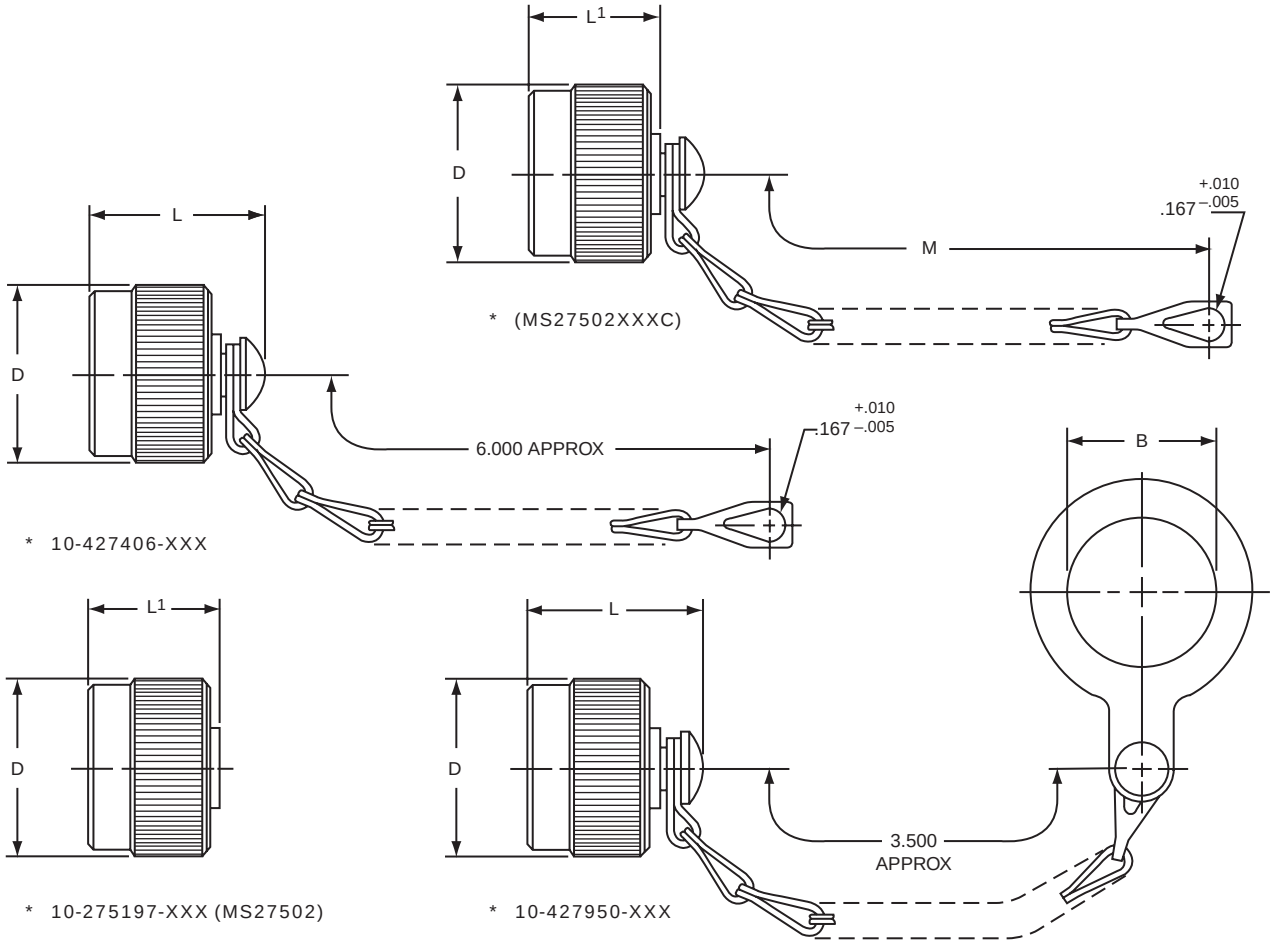

For MS stamping identification, accessories must be ordered by MS part number.
If ordered by 10- part number, they will be stamped with said number.

* To complete order number, add shell size and suffix number.
For example, shell size 11 with cadmium plate, nickel base would be 10-427406-117, MS27502A11C or MS20047A11.

Shell Size	B Dia. +.010 –.000	D Dia. Max	L Max.	L¹ Max.	M ±.250
9	.703	.844	1.070	.844	3.000
11	.844	.969	1.070	.844	3.000
13	1.016	1.125	1.070	.844	3.500
15	1.141	1.250	1.070	.844	3.500
17	1.266	1.406	1.070	.844	3.500
19	1.391	1.500	1.070	.844	3.500
21	1.516	1.625	1.070	.844	4.000
23	1.641	1.750	1.070	.844	4.000
25	1.766	1.875	1.089	.875	4.000

All dimensions for reference only.

Finish	10- Number Suffix	MS Number Suffix with chain	MS Number Suffix without chain
Chromate treat	-XX0		
Anodic coating	-XX5	CXXC	CXX
Cadmium plate nickel base	-XX7	AXXC	AXX
Olive drab, cadmium, nickel base	-XX9	BXXC	BXX
Electroless nickel		-XXG	FXXC

FXX

LJT — accessories
strain relief (solder type)

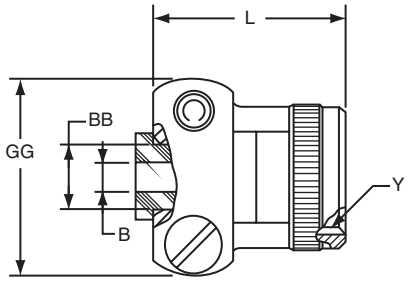

* 10-436792-XXX

For military type cable clamp see MS27506 or M85049/49 on page 28.

* To complete order number, add shell size and suffix number.

Finish	10-Number Suffix
Chromate treat	-XX0
Anodic coating	-XX5
Cadmium plate nickel base	-XX7
Olive drab, cadmium, nickel base	-XX9
Electroless nickel	-XXG

For example: Shell size 11 with cadmium plate, nickel base would be 10-436792-117.

Shell Size	B Dia. +.010 –.025	L Max.	Y Thread Class 2B (Plated)	GG Max.	BB Dia. +.000 –.011
9	.125	.859	.4375-28 UNEF	.775	.250
11	.188	.859	.5625-24 UNEF	.837	.312
13	.312	.859	.6875-24 UNEF	.963	.438
15	.375	1.109	.8125-20 UNEF	1.087	.562
17	.500	1.109	.9375-20 UNEF	1.150	.625
19	.625	1.109	1.0625-18 UNEF	1.400	.750
21	.625	1.109	1.1875-18 UNEF	1.400	.750
23	.750	1.234	1.3125-18 UNEF	1.587	.938
25	.800	1.234	1.4375-18 UNEF	1.681	1.000

All dimensions for reference only.

JT/LJT – crimp contacts, printed circuit board, wire wrap contacts (socket)

JT/LJT CRIMP CONTACTS

Contact Size	JT/LJT Pins MS No.	JT Sockets MS No.	LJT Sockets MS No.
8 (Coax)*	M39029/60-367	NA	M39029/59-366
8 (Twinax)	M39029/90-529**	NA	M39029/91-530
10 (Power)	M39029/58-528	NA	M39029/56-527
12	M39029/58-365	M39029/57-359	M39029/56-353
16	M39029/58-364	M39029/57-358	M39029/56-352
20	M39029/58-363	M39029/57-357	M39029/56-351
22	M39029/58-362	M39029/57-356	M39029/56-350
22M	M39029/58-361	M39029/57-355	M39029/56-349
22D	M39029/58-360	M39029/57-354	M39029/56-348

PRINTED CIRCUIT BOARD/WIRE WRAP CONTACTS
JT SOCKETS

PCB Contacts	Contact Stickout Max/Min (See Illustration)							
	Size	Tail Dia.	MS27472	MS27497	MS27499	MS27508	MS27473	MS27474
10-407553-15	22M	.019	.379 .305	.379 .305	.577 .506	.577 .506	.379 .305	.379 .305
10-407553-45	22M	.019	.156 .082	.156 .082	.354 .283	.354 .283	.156 .082	.156 .082
10-407553-55	22M	.019	.268 .194	.268 .194	.466 .395	.466 .395	.268 .194	.268 .194
10-407553-85	22M	.019	.104 .035	.104 .035	.302 .236	.302 .236	.104 .035	.104 .035
10-497641-25	20	.019	.257 .204	.257 .204	.455 .406	.455 .406	.257 .204	.257 .204
10-497641-45	20	.019	NS	NS	.192 .143	.192 .143	NS	NS
10-497631-25	16	.062	.392 .339	.392 .339	.590 .541	.590 .541	.392 .339	.392 .339
Wire Wrap Contacts		Tail Square						
10-407573-15	22D	.025	.058 NS	.058 NS	.256 .194	.256 .194	.058 NS	.058 NS
10-407573-35	22D	.025	.199 .130	.199 .130	.397 .331	.397 .331	.199 .130	.199 .130
10-407573-65	22D	.025	.364 .299	.364 .299	.562 .500	.562 .500	.364 .299	.364 .299

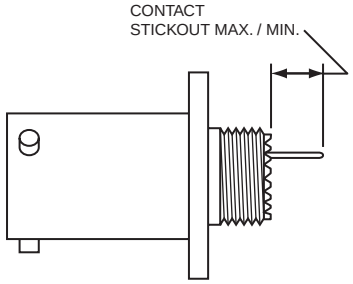

All dimensions for reference only. Consult Amphenol, Sidney, NY for specific contact contour stickout data. NS designates No Stickout.

See also catalog 12-170, Amphenol Cylindrical Connectors for PCB Applications. This catalog provides the most commonly used insert pattern pin-out drawings which have been tooled for the purpose of attaching cylindrical connectors to printed circuit boards.

Above part numbers include standard finish designation - gold plating over suitable underplate in accordance with MIL-C-39029. For other finish variations, consult Amphenol, Sidney, NY.

Note: 22M and 22D contacts are interchangeable.

NS - No Stickout

* For use with RG180B/U and RG195A/U cable. For other size 8 coax or optional sizes 12 and 18 coax contacts available for use in JT/LJT connectors, see catalog 12-030, or consult Amphenol, Sidney, NY.

** For use with 17/M176-00002 cable.

† Optional design - see slash sheet MS39029

For further contact options available for use in JT/LJT connectors (thermocouple, fiber optics), consult Amphenol, Sidney, NY.

LJT
wire wrap contacts (sockets)

PRINTED CIRCUIT BOARD/WIRE WRAP CONTACTS
LJT SOCKETS

PCB Contacts	Size	Tail Dia	MS27466 LJT00RT	MS27656 LJTPQ00RT	MS27496 LJT02RE	MS27505 LJTP02	MS27467 LJT06RE	MS27368 LJT07RE (9-17)	MS27368 LJT07RE (19-25)
			Contact Stickout Max/Min (See Illustration)						
10-497623-15	22D	.019	.328 .263	.313 .248	.532 .467	.532 .466	.328 .263	.307 .242	.285 .225
10-497623-25	22D	.019	.905 .840	.890 .825	1.109 1.044	1.109 1.043	.905 .840	.884 .819	.862 .802
10-497623-35	22D	.019	.385 .320	.370 .305	.589 .524	.589 .523	.385 .320	.364 .299	.342 .282
10-497623-45	22D	.019	.245 .180	.230 .165	.449 .384	.449 .383	.245 .180	.224 .159	.202 .142
10-497623-75	22D	.019	.183 .118	.168 .103	.387 .322	.387 .321	.183 .118	.162 .097	.140 .080
10-497623-105	22D	.019	.065 .000	.050 NS	.269 .204	.269 .203	.065 .000	.044 NS	.022 NS
10-497623-145	22D	.019	.646 .576	.631 .561	.850 .780	.850 .779	.646 .576	.625 .555	.603 .538
10-497623-155	22D	.019	.460 .395	.445 .380	.664 .599	.664 .598	.460 .395	.439 .374	.417 .357
10-497643-15	20	.019	.385 .339	.370 .316	.589 .535	.589 .536	.385 .331	.364 .310	.342 .293
10-497643-25	20	.019	.250 .204	.235 .181	.454 .400	.454 .401	.250 .196	.229 .175	.207 .158
10-497643-35	20	.019	.592 .546	.577 .523	.796 .742	.796 .743	.592 .538	.571 .517	.549 .500
10-497643-45	20	.019	.175 .129	.160 .106	.379 .325	.379 .326	.175 .121	.154 .100	.132 .083
10-497650-15	16	.040	.292 .246	.277 .223	.496 .442	.496 .443	.292 .238	.271 .217	.249 .200
Wire Wrap Contacts		Tail Square							
10-497577-15	22D	.025	.192 .127	.177 .112	.396 .331	.396 .330	.192 .127	.171 .106	.149 .089
10-497577-25	22D	.025	.039 NS	.024 NS	.243 .178	.243 .177	.039 NS	.018 NS	NS NS
10-497577-35	22D	.025	.238 .173	.223 .158	.442 .377	.442 .376	.238 .173	.217 .152	.195 .135
10-497577-55	22D	.025	.603 .538	.588 .523	.807 .742	.807 .741	.603 .538	.582 .517	.560 .500
10-497621-15	20	.025	.188 .146	.173 .123	.392 .342	.392 .343	.188 .138	.167 .117	.145 .100
10-497621-25	20	.025	.642 .600	.627 .577	.846 .796	.846 .797	.642 .592	.621 .571	.599 .554
10-497621-35	20	.025	.345 .303	.330 .280	.549 .499	.549 .500	.345 .295	.324 .274	.302 .257

Above part numbers include standard finish designation – gold plating over suitable underplate in accordance with MIL-C-39029. For other finish variations, consult Amphenol, Sidney, NY.

Note: 22M and 22D contacts are interchangeable.

NS – No Stickout

For other contact options available for use in LJT connectors (thermocouple, fiber optic), consult Amphenol, Sidney, NY.

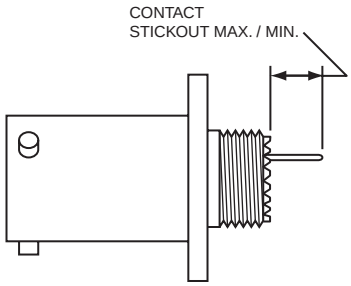

All dimensions for reference only. Consult Amphenol, Sidney, NY for specific contact contour stickout data. NS designates No Stickout.

See also catalog 12-170, Amphenol Cylindrical Connectors for PCB Applications. This catalog provides the most commonly used insert pattern pin-out drawings which have been tooled for the purpose of attaching cylindrical connectors to printed circuit boards.

JT/LJT — printed circuit board and wire wrap contacts (pins)

PRINTED CIRCUIT BOARD/WIRE WRAP CONTACTS, JT/LJT PINS

PCB Contacts	Size	Tail Dia	Contact Stickout Max/Min (See illustration page 42)												
			MS27472 JT00RT	MS7466 LJT00RT	MS27497 JTPQ00RT	MS27656 LJTPQ00RT	MS27499 JT02RE	MS27496 LJT02RE	MS27508 JTP02RE	MS27505 LJTP02RE	MS27473 JT06RT	MS27467 LJT06RE	MS27474 JT07RT	MS27468 LJT07RE (9-17)	MS27468 LJT07RE (19-25)
10-407552-15	22M	.019	.379 .317	.372 .317	.379 .317	.357 .302	.577 .520	.576 .521	.577 .520	.576 .520	.379 .317	.372 .317	.379 .317	.351 .296	.329 .279
10-407552-55	22M	.019	.268 .206	.261 .206	.268 .206	.246 .191	.466 .409	.465 .410	.466 .409	.465 .409	.268 .206	.261 .206	.268 .206	.240 .185	.218 .168
10-407552-85	22M	.019	.104 .047	.097 .047	.104 .047	.082 .032	.302 .250	.301 .251	.302 .250	.301 .250	.104 .047	.097 .047	.104 .047	.076 .026	.054 .009
10-407552-95	22M	.019	NS	NS	NS	NS	.105 .057	.104 .058	.105 .057	.104 .057	NS	NS	NS	NS	NS
10-407552-115	22M	.019	.042 NS	.035 NS	.042 NS	.020 NS	.240 .188	.239 .189	.240 .188	.239 .188	.042 NS	.035 NS	.042 NS	.014 NS	NS
10-497640-15	20	.019	.392 .335	.385 .335	.392 .335	.370 .320	.590 .538	.589 .539	.590 .538	.589 .538	.392 .335	.385 .335	.392 .335	.364 .314	.342 .297
10-497640-25	20	.019	.257 .200	.250 .200	.257 .200	.235 .185	.455 .403	.454 .404	.455 .403	.454 .403	.257 .200	.250 .200	.257 .200	.229 .179	.207 .162
10-497640-45	20	.019	NS	NS	NS	NS	.192 .140	.191 .141	.192 .140	.191 .140	NS	NS	NS	NS	NS
10-497640-65	20	.019	.182 .125	.175 .125	.182 .125	.160 .110	.380 .328	.379 .329	.380 .328	.379 .328	.182 .125	.175 .125	.182 .125	.154 .104	.132 .087
10-497596-15	20	.025	.102 .049	.095 .049	.102 .049	.080 .034	.300 .252	.299 .253	.300 .252	.299 .252	.102 .049	.095 .049	.102 .049	.074 .028	.052 .011
10-497596-25	20	.025	.192 .139	.185 .139	.192 .139	.170 .124	.390 .342	.389 .343	.390 .342	.389 .342	.192 .139	.185 .139	.192 .139	.164 .118	.142 .101
10-497596-35	20	.025	.273 .220	.266 .220	.273 .220	.251 .205	.471 .423	.470 .424	.471 .423	.470 .423	.273 .220	.266 .220	.273 .220	.245 .199	.223 .182
10-497596-55	20	.025	.390 .337	.383 .337	.390 .337	.368 .322	.588 .540	.587 .541	.588 .540	.587 .540	.390 .337	.383 .337	.390 .337	.362 .316	.340 .299
10-497695-15	16	.040	.299 .242	.292 .242	.299 .242	.277 .227	.497 .445	.496 .446	.497 .445	.496 .445	.299 .242	.292 .242	.299 .242	.271 .221	.249 .204
10-497630-25	16	.062	.392 .335	.385 .335	.392 .335	.370 .320	.590 .538	.589 .539	.590 .538	.589 .538	.392 .335	.385 .335	.392 .335	.364 .314	.342 .297
10-497630-35	16	.062	.104 .047	.097 .047	.104 .047	.082 .032	.302 .250	.301 .251	.302 .250	.301 .250	.104 .047	.097 .047	.104 .047	.076 .026	.054 .009
10-497630-45	16	.062	.152 .099	.145 .099	.152 .099	.130 .084	.350 .302	.349 .303	.350 .302	.349 .302	.152 .099	.145 .099	.152 .099	.124 .078	.102 .061
10-597502-15	12	.081	.272 .215	.265 .215	.272 .215	.250 .200	.470 .418	.469 .410	.470 .418	.469 .418	.272 .215	.265 .215	.272 .215	.244 .194	.222 .177
Wire Wrap Contacts		Tail Square													
10-407572-15	22D	.025	.058 .005	.051 .005	.058 .005	.036 NS	.256 .208	.255 .209	.256 .208	.255 .208	.058 .005	.051 .005	.058 .005	.030 NS	.008 NS
10-407572-35	22D	.025	.199 .142	.192 .142	.199 .142	.177 .127	.397 .345	.396 .346	.397 .345	.396 .345	.199 .142	.192 .142	.199 .142	.171 .121	.149 .104
10-407572-45	22D	.025	.299 .242	.292 .242	.299 .242	.277 .227	.497 .445	.496 .446	.497 .445	.496 .445	.299 .242	.292 .242	.299 .242	.271 .221	.249 .204
10-407572-75	22D	.025	.565 .512	.558 .512	.565 .512	.543 .497	.763 .715	.762 .716	.763 .715	.762 .717	.565 .512	.558 .512	.565 .512	.537 .491	.515 .474
10-407584-25	20	.025	.649 .596	.642 .596	.649 .596	.627 .581	.847 .799	.846 .800	.847 .799	.846 .799	.649 .596	.642 .596	.649 .596	.621 .575	.599 .558
10-407584-35	20	.025	.352 .299	.345 .299	.352 .299	.330 .284	.550 .502	.549 .503	.550 .502	.549 .502	.352 .299	.345 .299	.352 .299	.324 .278	.302 .261

Above part numbers include standard finish designation – gold plating over suitable underplate in accordance with MIL-C-39029.

For other finish variations, consult Amphenol, Sidney, N.Y.

Note: 22M and 22D contacts are interchangeable.

NS – No Stickout

For other contact options available for use in JT/LJT connectors, (thermocouple, fiber optic, high speed coax, twinax, triax, quadrax and differential twinax) consult Amphenol, Sidney, NY.

JT/LJT – accessories
universal "header assembly" for flex print or PC board mounting

Mounts to all MIL-DTL-38999 and MIL-C-26482 Connectors

The use of connectors with printed circuit termination is rapidly gaining popularity due to the rise of high volume, vapor phase or wave solder manufacturing processes. Termination of this style of connector to flex print or a printed circuit board represents a major cost in the manufacturing process for users. When adding flex or printed circuit board assemblies to an expensive filter or filter/transient protection connector, the total cost of a failed solder joint, a bent pin, or an unanticipated electrical failure becomes prohibitive. The universal header assembly from Amphenol will provide for easy separation of the connector from the board on these occasions.

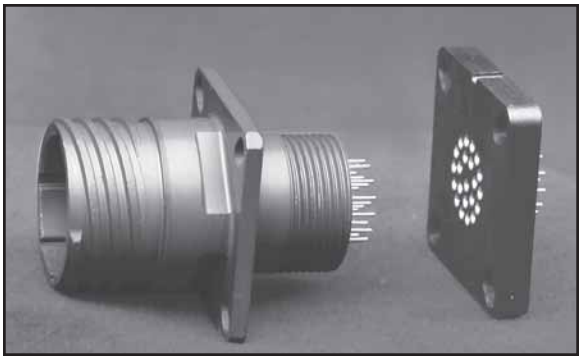

Headers provide easy separation of the connector from the PC board.

Header Assemblies Provide Cost Savings

Incorporation of the header assembly provides the user with time and cost saving potentials. These header assemblies can be vapor phase or wave soldered to flex or printed circuit boards prior to the receipt of the EMI/EMP connector. Headers can be installed to standard connectors, allowing for electrical testing that would adversely affect the sensitive diodes, MOV's or capacitors in the EMI/EMP connectors. Expensive connector assemblies can be easily removed from and reattached to the header assembly as the manufacturing process dictates.

Mounting Applications

Shell modifications are recommended, but are not necessary. The header assembly can be attached to connectors with standard flange placement or directly to the circuit board. The ideal application would involve either a single flange moved all the way to the rear of the connector or a double flange. Cinch nuts can be installed in either flange to allow easier mounting to the panel or the header assembly. The forward flange would mount the connector to the panel; the rear flange would be used to mount the header assembly. Various types of captivated or loose attaching screws can be utilized for unique applications.

Amphenol universal headers are slotted to allow mounting to all series of MIL-DTL-38999 or MIL-C-26482 connectors without special alterations. They are of similar dimension as the flange of the mounting connector and would be approximately .185 inches (4.70 mm) thick.

Incorporates a Shorter Pin/Socket Contact

The heart of the header assembly is a short pin/socket contact. The tail of the contact would accommodate standard through-hole diameters and thickness of the flex or printed circuit board materials. The socket is imbedded in the molded material, making electrical engagement with the printed circuit tail of the connector.

Cylindrical Configuration

- 3 PCB stickout dimensions are available.
- Size 22D contacts use .175 thick headers
- Size 16 to 20 contacts use .195 thick headers
- Consult Amphenol, Sidney NY for additional configurations.
- Headers for cylindrical connectors accommodate up to 128 pins. See pages 4-11 for JT/LJT mating connector contact layouts. Also see catalog 12-092 for MIL-DTL-38999, Series III mating contact layouts and catalog 12-070 for MIL-C-26482 mating contact layouts.

Mounting to Rectangular ARINC Connectors

- Headers for ARINC connector arrangements accommodate up to 150 pins
- Consult Amphenol, Sidney, NY for ARINC configurations and detailed dimensions.

Materials

- Body is molded from Torlon or PPS (Polyphenylene Sulfide)
- Electrical engagement areas of the header contact are plated with .00003 inches minimum of gold over .00005 inches minimum of nickel.

JT/LJT – accessories
universal “header assembly” for flex print or PC board mounting, cont.

The drawing below shows the standard universal adapter for use with MIL-DTL-38999 and MIL-C-26482 connectors. Consult Amphenol Aerospace, Sidney NY for drawings of headers for ARINC configurations.

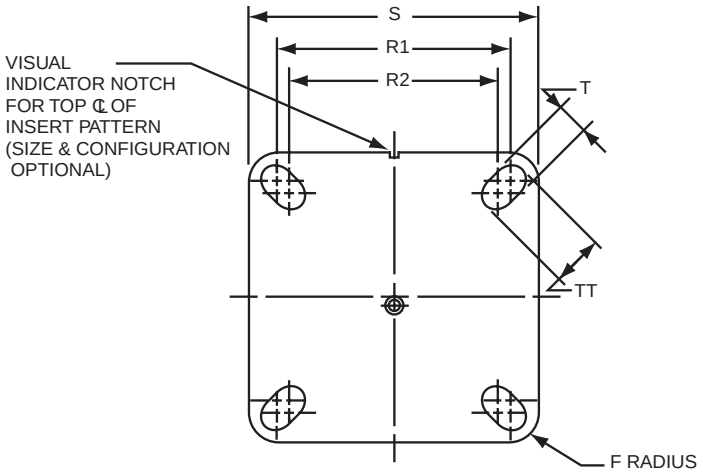

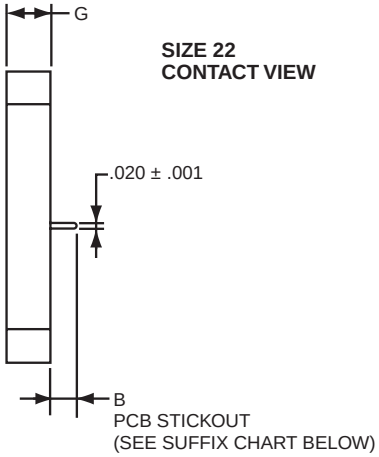

Assembly Part Number	Shell Size	F Radius	G ± .005	S ± .005	T + .008 – .006	R1 TP†	R2 TP†	TT + .008 – .006
21-904008-XX( )	8/9	.094		.938	.128	.719	.594	.216
21-904010-XX( )	10/11	.094		1.031	.128	.812	.719	.194
21-904012-XX( )	12/13	.094		1.125	.128	.906	.812	.194
21-904014-XX( )	14/15	.125		1.219	.128	.969	.906	.173
21-904016-XX( )	16/17	.125		1.312	.128	1.062	.969	.194
21-904018-XX( )	18/19	.125		1.438	.128	1.156	1.062	.194
21-904020-XX( )	20/21	.125		1.562	.128	1.250	1.156	.194
21-904022-XX( )	22/23	.125		1.688	.154	1.375	1.250	.242
21-904024-XX( )	24/25	.125		1.812	.154	1.500	1.375	.242

See Suffix Chart

Assemblies containing Size 22 contacts only: .175
Assemblies containing Size16 or 20 contacts: .195

† TP designates true position dimensioning.

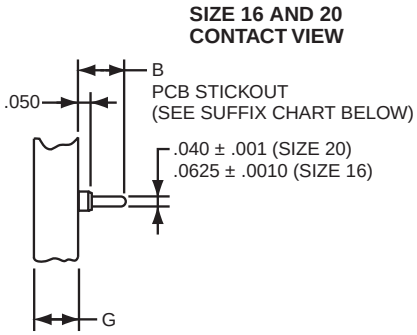

HOW TO ORDER INFORMATION
For Universal Adapter Used with MIL-DTL-38999 Connectors

Use coded number as follows:

21-9040 XX - XX X

- Designates Amphenol Interface Adapter
- Shell size designation for MIL-DTL-38999 Series I, II. See Suffix chart.
- Arrangement number - See MIL-STD-1560 or MIL-STD-1669. See insert availability charts on pages 4-6.
- Contact PCB Stickout designation See Suffix chart.

Universal adapters are also used with MIL-DTL-38999 Series III and with MIL-C-26482, Series 1 and 2. For how to order information on adapters to be used with ARINC connectors, consult Amphenol, Sidney NY.

ASSEMBLY NUMBER SUFFIX CHART

Shell Size Designation*	Arrangement Number Suffix***	Contact PCB Stickout**	
		Suffix	B ± .015 Stickout
08	Insert Arrangement Suffix from MIL-STD-1560 or MIL-STD-1669	1	.120
10		2	.185
12		3	.270
14			
16			
18			
20			
22			
24			

* Shell size designation for MIL-DTL-38999 Series I, II, III and IV and MIL-C-26482 Series 1 and 2.
Examples: Shell size 9 use 08. Shell size 25 use 24.

** Size 22 contacts available in all 3 stickout lengths.
Size 16 and 20 contacts available only in .185 and .270 lengths.

*** Insert arrangement 14-97 and 15-97 are not available at this time. Consult Amphenol, Sidney NY for information.

JT/LJT – thermocouple contacts, plastic protection caps, sealing plugs

THERMOCOUPLE CONTACTS

Contact Size	Material	JT/LJT Pins	JT Sockets	LJT Sockets
20	Chromel	10-407862-310	10-407863-310	10-407236-310
	Alumel	10-407862-320	10-407863-320	10-407865-320
	Iron	10-407862-335	10-407863-335	10-407865-335
	Constantan	10-407862-342	10-407863-342	10-407865-342

Partial listing. If you do not see the contact for your application, consult Amphenol, Sidney, N.Y.

PLASTIC PROTECTION CAPS

JT	LJT	Plug	Receptacle
8		10-70500-10	10-70506-10S
	9	10-70506-14	10-70500-10
10		10-70506-14	10-70506-12
	11	10-70506-16	10-70500-12
12		10-70506-16	10-70506-14
	13	10-70506-18	10-70500-14
14		10-70506-18	10-70506-16
	15	10-70506-20	10-70500-16
16		10-70506-20	10-70506-18
	17	10-70506-22	10-70500-18
18		10-70506-22	10-70506-20
	19	10-70506-24	10-70500-20
20		10-70506-24	10-70506-22
	21	10-70576-24	10-70500-22
22		10-70576-24	10-70506-24
	23	10-70506-28	10-70500-24
24		10-70506-28	10-70576-24
	25	10-558651-25	10-70506-28

SEALING PLUGS

Contact Size	Sealing Plugs	
	Proprietary No	MS No
8 (Coax)	10-482099-8	MS27488-8
8 (Twinax)	T3-4008-59P	N/A
10 (Power)	10-576225	N/A
12	10-405996-12	MS27488-12
16	10-405996-16	MS27488-16
20	10-405996-20	MS27488-20
22	10-405996-22	MS27488-22
22M	10-405996-22	MS27488-22
22D	10-405996-22	MS27488-22

JT/LJT application tools

The following data includes information pertaining to the application tools which have been established for crimping, inserting, and removing the size 12, 16, 20, 22, 22D and 22M contacts incorporated in the JT-R, LJT-R and MIL-DTL-38999 (MS) series connectors as applicable.

All crimping tools included are the “full cycling” type and when used as specified in the installation instructions (L-624 and L-844 covering the JT-R, LJT-R and MS series connectors) will provide reliable crimped wire to contact terminations. There is a possibility of additional crimping tools other than those included being available at present or in the future for this specific application.

For additional information on coaxial contacts, consult Amphenol catalog section 12-130.

CRIMPING TOOLS

Contact Size/Type	Crimping Tool	Turret Die or Positioner
12 Pin and Socket	M22520/1-01	M22520/1-04
16 Pin and Socket	M22520/1-01 M22520/7-01	M22520/1-04 M22520/7-04
20 Pin and Socket	M22520/1-01 M22520/2-01 M22520/7-01	M22520/1-04 M22520/2-10 M22520/7-08
22, 22D, 22M Pin	M22520/2-01 M22520/7-01	M22520/2-09 M22520/7-07
22, 22D, 22M Socket (LJT-R)	M22520/2-01 M22520/7-01	M22520/2-07 M22520/7-05
22D Socket (JT-R)	M22520/2-01 M22520/7-01	M22520/2-06 M22520/7-06
8 Twinax Center Pin and Socket	M22520/2-01	M22520/2-37
8 Twinax Intermediate Outer Pin & Socket	M22520/5-01	M22520/5-200

Contact Size/Type	Crimping Tool	Turret Die or Positioner
8 (Coaxial Inner Pin and Socket)	M22520/2-01	M22520/2-31
8 Coaxial Outer Pin and Socket	M22520/5-01	M22520/5-05 Die Closure B
	M22520/5-01	M22520/5-41 Die Closure B
	M22520/10-01	M22520/10-07 Die Closure B
16 Coaxial Inner Pin and Socket	M22520/2-01	M22520/2-35
16 Coaxial Outer Pin and Socket	M22520/4-01	M22520/4-02
12 Coaxial Inner Pin and Socket	M22520/2-01	M22520/2-34
12 Coaxial Outer Pin and Socket	M22520/31-01	M22520/31-02
10 (Power)	††	††

Where 2 or 3 tools are listed for a contact size, only one tool and its die or positioner are required to crimp the contact. The above crimping tools and positioners are available from the approved tool manufacturer.

INSERTION TOOLS

Use with Contact Size	Plastic Tools		Metal Tools			
			Angle Type		Straight Type Proprietary Part Number	Color Code
	Part Number	Color Code	MS Part Number	Proprietary Part Number		
10 (Power)	M81969/14-05*	Gray/White	M81969/8-11	†	†	Green
12	M81969/14-04*	Yellow/(White)	M81969/8-09	11-8674-12	11-8794-12	Yellow
16	M81969/14-03*	Blue/(White)	M81969/8-07	11-8674-16	11-8794-16	Blue
20	M81969/14-10*	Red/(Orange)	M81969/8-05	11-8674-20	11-8794-20	Red
22	M81969/14-09	Brown/(White)	M81969/8-03	11-8674-22	11-8794-22	Brown
22D, 22M	M81969/14-01*	Green/(White)	M81969/8-01	11-8674-24	11-8794-24	Black
8 Coaxial	None Required					
8 Twinax	None		M81969/46-06**	None		Red

REMOVAL TOOLS

Use with Contact Size	Plastic Tools		Metal Tools				
				Angle Type			
	Part Number	Color Code	For Unwired Contacts Proprietary Part Number	MS Part Number	Proprietary Part Number	Straight Type Proprietary Part Number	Color Code
10 (Power)	M81969/14-05*	(Green)/White	†	M81969/8-12	†	†	Green/White
12	M81969/14-04*	(Yellow)/White	11-10050-11	M81969/8-10	11-8675-12	11-8795-12	Yellow/White
16	M81969/14-03*	(Blue)/White	11-10050-10	M81969/8-08	11-8675-16	11-8795-16	Blue/White
20	M81969/14-10*	(Red) Orange	11-10050-9	M81969/8-06	11-8675-20	11-8795-20	Red/White
22	M81969/14-09*	(Brown)/White	11-10050-8	M81969/8-04	11-8675-22	11-8795-22	Brown/White
22D, 22M	M81969/14-01*	(Green)/White	11-10050-7	M81969/8-02	11-8675-24	11-8795-24	Green/White
8 Coaxial	M81969/14-12	Green	None	None	11-9170	DRK264-8††	N/A
8 Twinax	M81969/14-12	Green	None	M81969/46-12**	11-9170	N/A	N/A

The M81969/8, 11-8674, 11-8675, and 11-8794 metal contact insertion and removal tools will accommodate wires having the maximum outside diameter as follows: Contact size 12– .155, 16– .109, 20– .077, 22, 22D, 22M– .050. When wire diameters exceed those specified, the plastic tools must be used.

* Double ended insertion/removal tool.
** Twinax insertion and removal tools are available only in a straight type, metal version.
† To be determined
†† Contact Daniels Manufacturing Co. for availability.

JT/LJT – solder contact connectors

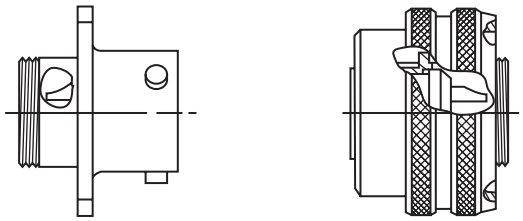

Wall Mounting Receptacle

Straight Plug

JT Solder

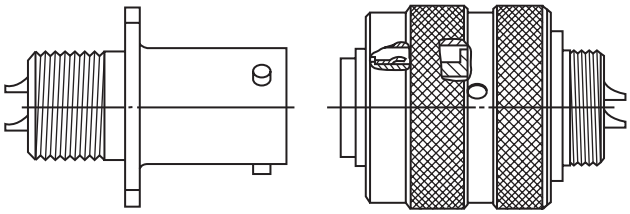

Wall Mounting Receptacle

Straight Plug

LJT Solder

Amphenol® LJT and JT Series solder contact connectors are qualified to Series I and II respectively, of MIL-C-27599. These connectors use a rigid, hard dielectric insert, which is molded around the pin and socket contacts. This permits a higher degree of pressurization across an interface, of up to $1x10^{-3}$ cc/sec. Contact positional tolerances are also considerably reduced, with less chance of pin bending.

Shell styles similar to MIL-DTL-38999 crimp connectors are available along with a large variety of contact sizes and insert patterns.

A complete line of accessories is also available.

For additional information on Amphenol® LJT/JT solder type connectors, ask for Product Data Sheet 158. Contact your local sales office or

Amphenol Corporation
Amphenol Aerospace
40 – 60 Delaware Avenue
Sidney, New York 13838-1395
Telephone:607-563-5011
Fax:607-563-5157
www.amphenol-aerospace.com

JT/LJT
how to order

PROPRIETARY PART NUMBER

To more easily illustrate ordering procedure, part number JT00RE-22-2PA( ) is shown as follows:

PART NUMBER

JT	00	RE -	22 -	2	P	A	( )
1	2	3	4	5	6	7	8/9

See code below:

1. Connector Type:

	JT	designates standard Junior Tri-Lock connector
LJT		designates long Junior Tri-Lock connector
LJTS	JTS	designates high temperature connector
LJTN	JTN	designates chemical and fuel resistant
	JTL	designates miniature mounting dimensions
	JTLN	designates miniature mounting dimensions - chemical resistant
	JTLS	designates miniature mounting dimensions - high temperature
LJTPQ	JTPQ	designates back panel mounted wall mounting receptacle
LJTP	JTP	designates back panel mounted box mounting receptacle
LJTPN	JTPN	designates back panel mounted - chemical resistant
LJTPS	JTPS	designates back panel mounted - high temperature
	JTG	designates plug with grounding fingers*
	JTNG	designates plug with grounding fingers* - chemical resistant

2. Shell Style

00 designates wall mount receptacle
01 designates line mount receptacle
02 designates box mount receptacle
06 designates straight plug
07 designates jam nut receptacle
08 designates 90 degree plug
I designates solder mount receptacle - hermetic

Lanyard Release Connectors (See pages 38-41 for ordering)

88 designates Fail Safe lanyard release plug with corrosion resistant olive drab cadmium plate over nickel shells
91 designates Fail Safe lanyard release plug with electroless nickel plated aluminum shells.

3. Service Class: Solder contacts/connectors:

"P" for potting applications - These connectors are supplied with a potting boot.† All shells are designed with integral featues to retain potting boots.
"A" for general applications.
"A (SR)" - threaded rear design with strain relief.†
"C" for pressurized applications
"C (SR)" - threaded rear design with strain relief.†
"E" box mount and thru-bulkhead only with no backend threads.
"H" for hermetic applications - Fused compression glass sealed inserts. Leakage rate less than .01 micron cu. ft./hr. (1 x 10^{-7} cc/sec.) at 15 psi differential.
"Y" same as "H" with interfacial seal.
"T" for MS27599A applications - general duty, pressurized (receptacles only)

3. Service Class: Crimp contacts/connectors:

"RP" for potting crimp applications. Supplied with spacer grommet and potting boot.††
"RE" for environmental crimp applications. Supplied with a grommet and compression nut.† Can be supplied with strain relief integral with compression nut "RE (SR)". (JT Series only).
"RGF"* electroless nickel plated ground plane aluminum, 200°C
"RGW"** olive drab cadmium plated ground plane aluminum, 175°C
"RT" for environmental applications. Supplied without rear accessories. Design provides serrations on rear threads of shells.

For additional information defining description of service class, consult Amphenol, Sidney, NY.

4. Shell Size:

JT shell sizes available from 8 through 24.
LJT shell sizes available from 9 through 25.

5. Insert Arrangement:

22-2 designates insert arrangement. Refer to pages 4-11 for insert availability.

6. Contact Style:

P designates pin contacts; S designates socket contacts.

7. Alternate Keying:

"A" designates alternate keying connector assembly. Other basic alternate keys are "B", "C" and "D". No letter required for normal (no rotation) position. See pages 4 and 5.

8. Strain Relief Option:

"SR" designates a strain relief clamp. Strain reliefs are available only on "A", "C" and "RE" class connectors.

9. Finish Variation Suffix:

See finish variations available in table below:

Finish	Military Finish Data	Finish Suffix	Finish Plus "SR" Suffix
Cadmium plated nickel base	A		(SR)
Olive drab cadmium plate nickel base	B	(014)	(386)
Electroless nickel	F	(023)	(424)
Electroless nickel, space compatible		(453)	(467)
Anodic coating (Alumilite)	C	(005)	(300)
Chromate treated (Iridite 14-2)		(011)	(344)
Passivated steel	E	–	–
Nickel-PTFE		(038)	

MILITARY TYPES

MS27473 E 14 A 18 P A

MS Number
Service Class
Shell Size
Finish
Insert Arrangement
Contact Style (P or S)
Alternate Keying (No letter required for normal position)

Military Service Class
E environmental, same as RE
T environmental, same as RT
P potting, same as RP
Y hermetically sealed, same as Y

For finish variations see above chart. For additional data, see page 3.
For MS depictions and dimensional data see applicable Mil-Spec. (MIL-DTL-38999, MIL-C-27599).
Military Fail Safe lanyard release plug MS27661 - See pages 38-41 for ordering.

* Grounding fingers standard on all LJT plugs

† Not applicable to box mounting style or LJT Series I.
†† Not applicable to box mounting style.
** For more information on Coax/Triax/Twinax Ground Plane Connectors, see page 55.

JT/LJT
specials - filter protection connectors, Aquacon connectors and 38999 for PCB attachment

FILTER/TRANSIENT PROTECTION

Filter and/or voltage surge arresting devices are integrated into a JT or an LJT connector to eliminate conventional bulky exterior filtering systems. This unique design reduces weight, space and user testing while providing system protection from EMI/ EMP. Ask for publication 12-120 or contact Amphenol, Sidney, NY for complete information on Amphenol® EMI Filter/Transient Protection Connectors.

JT with Filter Protection

LJT with Filter Protection

AQUACON

Specially designed connectors for underwater and other fluid-immersion applications are available in all Amphenol JT/LJT insert arrangements. Aquacon AJ (immersible JT) or AL (immersible LJT) series connectors offer 1500 psi capability, visual mating indication to assure proper sealing upon mating, and design flexibility at low cost. Corrosion resistant materials and environment-proof molded cable terminations provide a connector well suited to immersed usage. AJ and AL Series Aquacon Connectors represent the utmost in general purpose immersible connectors. Refer to catalog 12-140 for additional data.

FLEX TERMINATION ASSEMBLIES FOR PRINTED CIRCUIT BOARD APPLICATIONS

Flex circuits are available for MIL-DTL-38999 Series I and II connectors in flat and sculptured styles. Amphenol provides flex termination assemblies for printed circuit board attachment through Amphenol ACT, Advanced Circuit Technology. Sculptured® Flexible Circuits have built-in terminations that eliminate the failures associated with crimped or solder-on contacts. They plug into a printed circuit board and create a self-locking terminal pad which eliminates the need for an additional interconnect to the PCB. They are designed to meet specific lengths, current carrying capacities and to fit the precise geometric shape of the connector to board package. For more information see ACT brochure.

MIL-DTL-38999 WITH PC TAIL CONTACTS

Amphenol provides cylindrical connectors with PC tail contacts for solder mounting on printed circuit boards. They available in MIL-DTL-38999 Series I, II and III as well as other mil-spec and proprietary cylindricals. These connectors incorporate PCB contacts in sizes 16, 20 and 22D. Most popularly used arrangements are shown with pin-out dimensional layouts in Amphenol catalog 12-170, Cylindrical Connectors for PCB Application.

For more information on these products visit website: www.amphenol-aerospace.com

JT/LJT
specials - ground plane connectors and shielded contacts

Amphenol offers MIL-DTL-38999 Series I and II* connectors for data bus, LAN and coax/triax/twinax transmission lines with conductive inserts that ground the outer conductor of the coax, triax or twinax contact to the shell. These connectors are sold “less contacts”. They will accommodate size 8 coax, triax or twinax contacts or size 12 and 16 coax contacts.

The insert availability chart on pages 4-6 indicate the patterns that are available in a ground plane version, (see those designated with a star symbol), and consult how to order page for ordering procedure.

Ground Plane Connector with Metallic Insert, Power Contacts and Shielded Twinax Contacts

CONNECTORS WITH COAX CONTACTS

For shielded wire applications, coaxial contacts can be incorporated into MIL-DTL-38999 connectors. Designed-in crimp or solder types are available to fit various RG and special cables. High performance coaxial contacts eliminate discontinuities or impedance variations due to movement of parts under axial load. For further information on coax contacts ask for catalog 12-130.

CONNECTORS WITH CONCENTRIC TWINAX CONTACTS

The size 8 concentric twinax contact was developed for use in MIL-STD-1553 Airborne multiplex data bus applications which require high performance interconnect characteristics in multi-pin connectors. Ideal for this application need is the high performance Tri-Start connector with its fully scoop-proof feature of recessed pins. (See Amphenol catalog 12-092) The concentric twinax contact is crimp terminable to twisted-shielded cable. Other features include:

- Provides protection from magnetic and electrostatic interference
  including nuclear electromagnetic pulse
- Maintains shield integrity through a multi-pin cylindrical connector and does not require contact polarization within the insert
- 175°C rated and meets performance levels of MIL-DTL-38999 Series III connectors
- Available in size 8 and 12 contacts
- MIL-C-17/176-00002 cable termination
- Qualified to M39029/90 & /91
- Integral part of the MIL-STD-1760 interconnection system

For further information on concentric twinax contacts, consult catalog 12-130.

Size 8 Concentric Twinax Contacts Qualified to M39029/90 and /91 (Also available in Size 12)

CONNECTORS WITH REDUCED COMPONENT TWINAX (RCT) CONTACTS

The RCT (Reduced Component Twinax) contact meets MIL-C-39029/90 and /91 requirements for intermateability and performance while reducing the number of user-assembled components from seven to three. The inner conductors and outer barrel of the RCT are each terminated to the cable by a crimp joint, so no costly assembly soldering operations are required. Features include:

- Three user assembled components
- Available in size 8 and size 10 contacts
- MIL-C-17/176-00002 cable termination
- For installation in MIL-DTL-38999 Series III connectors
- Termination completed in only two crimping operations
- Inner conductors stripped to common length, eliminating multiple measurements

For further information on RCT contacts, consult catalog 12-130.

Size 8 RCT (Reduced Component Twinax) Contact (Also available in Size 10)

*MIL-DTL-38999 Series III supersedes MIL-C-38999 Series III

Мы молодая и активно развивающаяся компания в области поставок электронных компонентов. Мы поставляем электронные компоненты отечественного и импортного производства напрямую от производителей и с крупнейших складов мира.

Благодаря сотрудничеству с мировыми поставщиками мы осуществляем комплексные и плановые поставки широчайшего спектра электронных компонентов.

Собственная эффективная логистика и склад в обеспечивает надежную поставку продукции в точно указанные сроки по всей России.

Мы осуществляем техническую поддержку нашим клиентам и предпродажную проверку качества продукции. На все поставляемые продукты мы предоставляем гарантию .

Осуществляем поставки продукции под контролем ВП МО РФ на предприятия военно-промышленного комплекса России , а также работаем в рамках 275 ФЗ с открытием отдельных счетов в уполномоченном банке. Система менеджмента качества компании соответствует требованиям ГОСТ ISO 9001.

Минимальные сроки поставки, гибкие цены, неограниченный ассортимент и индивидуальный подход к клиентам являются основой для выстраивания долгосрочного и эффективного сотрудничества с предприятиями радиоэлектронной промышленности, предприятиями ВПК и научно-исследовательскими институтами России.

С нами вы становитесь еще успешнее!

Наши контакты:

Телефон: +7 812 627 14 35

Электронная почта: sales@st-electron.ru

Адрес: 198099, Санкт-Петербург, Промышленная ул, дом № 19, литера Н, помещение 100-Н Офис 331