L4981A
L4981B

POWER FACTOR CORRECTOR

- CONTROL BOOST PWM UP TO 0.99P.F.
- LIMIT LINE CURRENT DISTORTION TO < 5%
- UNIVERSAL INPUT MAINS
- FEED FORWARD LINE AND LOAD REGULATION
- AVERAGE CURRENT MODE PWM FOR MINIMUM NOISE SENSITIVITY
- HIGH CURRENT BIPOLAR AND DMOS TOTEM POLE OUTPUT
- LOW START-UP CURRENT (0.3mA TYP.)
- UNDER VOLTAGE LOCKOUT WITH HYSTERESIS AND PROGRAMMABLE TURN ON THRESHOLD
- OVERVOLTAGE, OVERCURRENT PROTECTION
- PRECISE 2% ON CHIP REFERENCE EXTERNALLY AVAILABLE
- SOFT START

MULTIPOWER BCD TECHNOLOGY

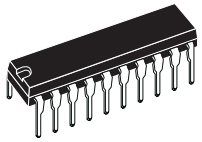

DIP20

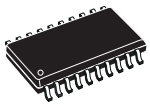

SO20

ORDERING NUMBERS: L4981X (DIP20)
L4981XD (SO20)

DESCRIPTION

The L4981 I.C. provides the necessary features to achieve a very high power factor up to 0.99.
Realized in BCD 60II technology this power factor corrector (PFC) pre-regulator contains all the control functions for designing a high efficiency-mode power supply with sinusoidal line current consumption.
The L4981 can be easily used in systems with mains voltages between 85V to 265V without any line switch. This new PFC offers the possibility to work at fixed frequency (L4981A) or modulated frequency (L4981B) optimizing the size of the in-

BLOCK DIAGRAM

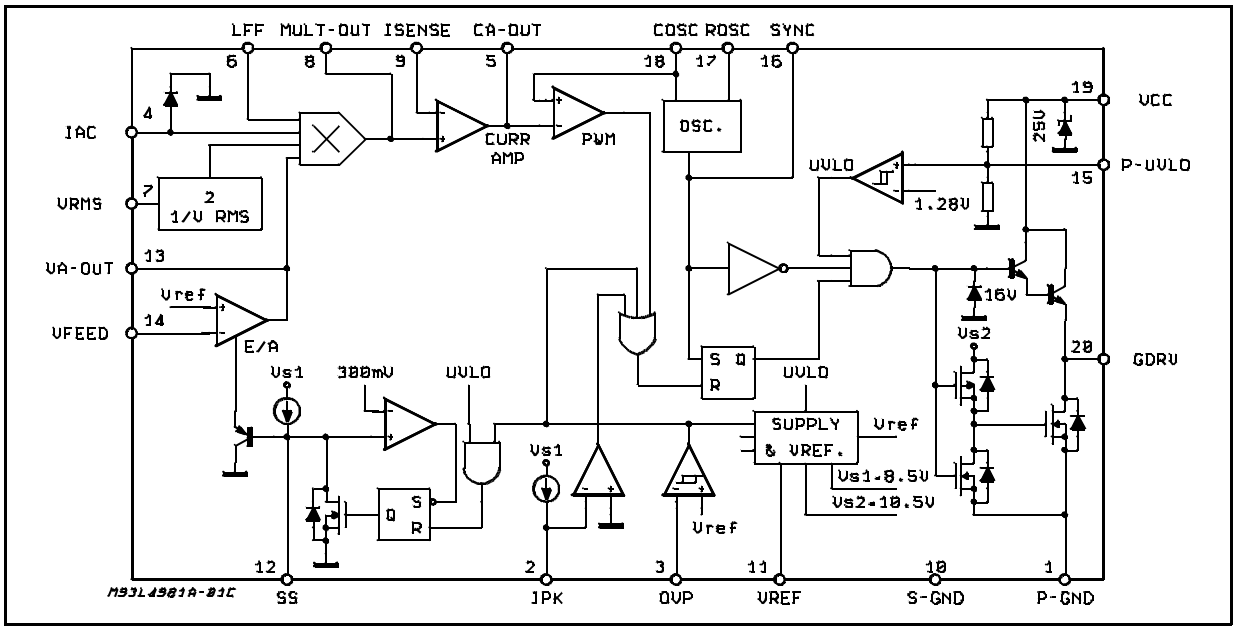

put filter; both the operating frequency modes working with an average current mode PWM controller, maintaining sinusoidal line current without slope compensation.
Besides power MOSFET gate driver, precise voltage reference (externally available), error amplifier, undervoltage lockout, current sense and the soft start are included. To limit the number of the external components, the device integrates protections as overvoltage and overcurrent. The overcurrent level can be programmed using a simple resistor for L4981A. For a better precision and for L4981B an external divider must be used.

ABSOLUTE MAXIMUM RATINGS

Symbol	Pin	Parameter		Value	Unit
V_{CC}	19	Supply Voltage (I_{CC} ≤50mA) (*)		selflimit	V
I_{GDRV}	20	Gate driv. output peak current (t = 1µs)	SINK	2	A
			SOURCE	1.5	A
V_{GDRV}		Gate driv. output voltage t = 0.1µs		-1	V
		Voltages at pins 3, 14, 7, 6, 12, 15		-0.3 to 9	V
V_{VA-OUT}	13	Error Amplifier Voltage		-0.3 to 8.5	V
I_{AC}	4	AC Input Current		5	mA
		Voltages at pin 8, 9		-0.5 to 7	V
V_{CA-OUT}	5	Current Amplifier Volt. (Isource = -20mA; Isink = 20mA)		-0.3 to 8.5	V
V_{ROSC}	17	Voltage at pin 17		-0.3 to 3	V
	11, 18	Voltage at pin 11, 18		-0.3 to 7	V
I_{COSC}	18	Input Sink Current		15	mA
$I_{FREQ-MOD}$	16	Frequency Modulation Sink Current (L4981B)		5	mA
V_{SYNC}	16	Sync. Voltage (L4981A)		-0.3 to 7	V
V_{IPK}	2	Voltage at pin 2 Voltage at Pin 2 t = 1µs		-0.3 to 5.5 -2	V V
P_{tot}		Power Dissipation at T_{amb} = 70°C (DIP20)		1	W
		Power Dissipation at T_{amb} = 70°C (SO20)		0.6	W
T_{op}		Operating Ambient Temperature		-40 to 125	°C
T_{stg}		StorageTemperature		-55 to 150	°C

(*) Maximum package power dissipation limits must be observed.

PIN CONNECTIONS (Top views)

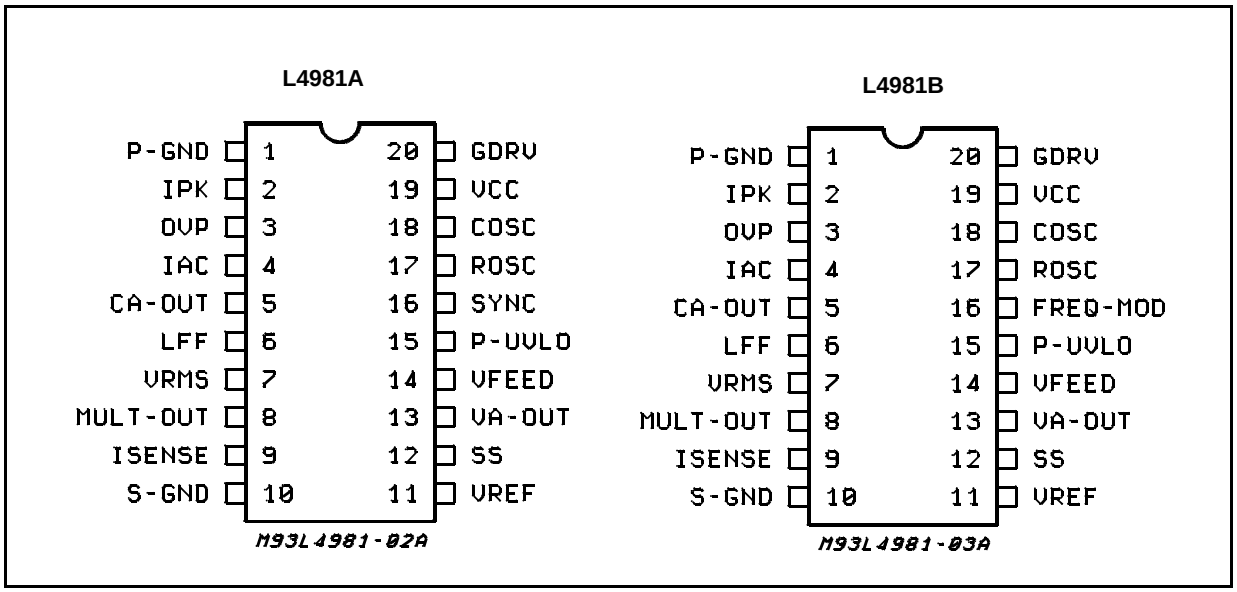

THERMAL DATA

Symbol	Parameter	DIP 20	SO 20	Unit
$R_{th\ j\text{-}amb}$	Thermal Resistance Junction-ambient	80	120	°C/W

PIN FUNCTIONS

N.	Name	Description
1	P-GND	Power ground.
2	IPK	**L4981A** peak current limiting. A current limitation is obtained using a single resistor connected between Pin 2 and the sense resistor. To have a better precision another resistor between Pin 2 and a reference voltage (Pin 11) must be added. **L4981B** peak current limiting. A precise current limitation is obtained using two external resistor only. These resistors must be connected between the sense resistor, Pin 2 and the reference voltage.
3	OVP	Overvoltage protection. At this input are compared an internal precise 5.1V (typ) voltage reference with a sample of the boost output voltage obtained via a resistive voltage divider in order to limit the maximum output peak voltage.
4	IAC	Input for the AC current. An input current proportional to the rectified mains voltage generates, via a multiplier, the current reference for the current amplifier.
5	CA-OUT	Current amplifier output. An external RC network determinates the loop gain.
6	LFF	Load feedforward; this voltage input pin allows to modify the multiplier output current proportionally to the load, in order to give a faster response versus load transient. The best control is obtained working between 1.5V and 5.3V. If this function is not used, connect this pin to the voltage reference (pin = 11).
7	VRMS	Input for proportional RMS line voltage. the VRMS input compesates the line voltage changes. Connecting a low pass filter between the rectified line and the pin 7, a DC voltage proportional to the input line RMS voltage is obtained. The best control is reached using input voltage between 1.5V and 5.5V. If this function is not used connect this pin to the voltage reference (pin = 11).
8	MULT-OUT	Multiplier output. This pin common to the multiplier output and the current amplifier N.I. input is an high impedence input like I_{SENSE}. The MULT-OUT pin must be taken not below -0.5V.
9	I_{SENSE}	Current amplifier inverting input. Care must be taken to avoid this pin goes down -0.5V.
10	S-GND	Signal ground.
11	V_{REF}	Output reference voltage (typ = 5.1V).Voltage refence at ± 2% of accuracy externally available, it's internally current limited and can deliver an output current up to 10mA.
12	SS	A capacitor connected to ground defines the soft start time. An internal current generator delivering 100µA (typ) charges the external capacitor defining the soft start time constant. An internal MOS discharge, the external soft start capacitor both in overvoltage and UVLO conditions.
13	VA-OUT	Error amplifier output, an RC network fixes the voltage loop gain characteristics.
14	VFEED	Voltage error amplifier inverting input. This feedback input is connected via a voltage divider to the boost output voltage.
15	P-UVLO	Programmable under voltage lock out threshold input. A voltage divider between supply voltage and GND can be connected in order to program the turn on threshold.
16	SYNC (L4981A)	This synchronization input/output pin is CMOS logic compatible. Operating as SYNC in, a rectangular wave must be applied at this pin. Opearting as SYNC out, a rectangular clock pulse train is available to synchronize other devices.
	FREQ-MOD (L4981B)	Frequency modulation current input. An external resistor must be connected between pin 16 and the rectified line voltage in order to modulate the oscillator frequency. Connecting pin 16 to ground a fixed frequency imposed by R_{OSC} and C_{OSC} is obtained.
17	R_{OSC}	An external resistor connected to ground fixes the constant charging current of C_{OSC}.
18	C_{OSC}	An external capacitor connected to GND fixes the switching frequency.
19	V_{CC}	Supply input voltage.
20	GDRV	Output gate driver. Bipolar and DMOS transistors totem pole output stage can deliver peak current in excess 1A useful to drive MOSFET or IGBT power stages.

ELECTRICAL CHARACTERISTICS (Unless otherwise specified V_{CC} = 18V, C_{OSC} = 1nF, R_{OSC} = 24KΩ, C_{SS} = 1µF, V_{CA-OUT} = 3.5V, V_{ISENSE} = 0V, V_{LFF} = V_{REF}, I_{AC} = 100µA, V_{RMS} = 1V, V_{FEED} = GND, V_{IPK} = 1V, V_{OVP} = 1V, T_J = 25°C

Symbol	Prameter	Test Condition	Min.	Typ.	Max.	Unit
ERROR AMPLIFIER SECTION						
V_{IO}	Input Offset Voltage	–25°C < T_J < 85°C			±8	mV
I_{IB}	Input Bias Current	V_{FEED} = 0V	-500	-50	500	nA
	Open Loop Gain		70	100		dB
V_{13H}	Output High voltage	V_{FEED} = 4.7V I_{VA-OUT} = -0.5mA	5.5	6.5	7.5	V
V_{13L}	Output Low Voltage	V_{FEED} = 5.5V I_{VA-OUT} = 0.5mA		0.4	1	V
$-I_{13}$	Output Source Current	V_{FEED} = 4.7V; V_{VA-OUT} = 3.5V	2	10		mA
I_{13}	Output Sink Current	V_{FEED} = 5.5V; V_{VA-OUT} = 3.5V	4	20		mA
REFERENCE SECTION						
V_{ref}	Reference Output Voltage	–25°C < T_J < 85°C	4.97	5.1	5.23	V
		T_j = 25°C I_{ref} = 0	5.01	5.1	5.19	V
ΔV_{ref}	Load Regulation	1mA ≤ I_{ref} ≤ 10mA –25°C < T_J < 85°C		3	15	mV
ΔV_{ref}	Line Regulation	12V ≤ V_{CC} ≤ 19V –25°C < T_J < 85°C		3	10	mV
$I_{ref\ sc}$	Short Circuit Current	V_{ref} = 0V	20	30	50	mA
OSCILLATOR SECTION						
f_{osc}	Initial Accuracy	T_j = 25°C	85	100	115	KHz
	Frequency Stability	12V ≤ V_{CC} ≤ 19V –25°C < T_J < 85°C	80	100	120	KHz
V_{svp}	Ramp Valley to Peak		4.7	5	5.3	V
I_{18C}	Charge Current	V_{COSC} = 3.5V	0.45	0.55	0.65	mA
I_{18D}	Discharge Current	V_{COSC} = 3.5V		11.5		mA
V_{18}	Ramp Valley Voltage		0.9	1.15	1.4	V
SYNC SECTION (Only for **L4981A**)						
t_W	Output Pulse Width	50% Amplitude	0.3	0.8		µs
I_{16}	Sink Current with Low Output Voltage	V_{SYNC} = 0.4V V_{COSC} = 0V	0.4	0.8		mA
$-I_{16}$	Source Current with High Output Voltage	V_{SYNC} = 4.5V V_{COSC} = 6.7V	1	6		mA
V_{16L}	Low Input Voltage				0.9	V
V_{16H}	High Input Voltage		3.5			V
t_d	Pulse for Synchronization		800			ns
FREQUENCY MODULATION FUNCTION (Only for **L4981B**)						
f_{18max}	Maximum Oscillation Frequency	$V_{FREQ-MOD}$ = 0V (Pin 16) I_{freq} = 0	85	100	115	KHz
f_{18min}	Minimum Oscillator Frequency	$I_{FREQ-MOD}$ = 360µA (Pin 16) V_{VRMS} = 4V (Pin 7)		74		KHz
		$I_{FREQ-MOD}$ = 180µA (Pin 16) V_{VRMS} = 2V (Pin 7)		76		KHz
SOFT START SECTION						
I_{SS}	Soft Start Source Current	V_{SS} = 3V	60	100	140	µA
V_{12sat}	Output Saturation Voltage	V_3 = 6V, I_{SS} = 2mA		0.1	0.25	V

ELECTRICAL CHARACTERISTICS (continued)

Symbol	Parameter	Test Condition	Min.	Typ.	Max.	Unit
SUPPLY VOLTAGE						
V_{CC}	Operating Supply Voltage				19.5	V
OVER VOLTAGE PROTECTION COMPARATOR						
V_{thr}	Rising Threshold Voltage		V_{ref} -20mV	5.1	V_{ref} +20mV	V
V_{3Hys}	Hysteresis		180	250	320	mV
I_3	Input Bias Current			0.05	1	µA
t_d	Propagation delay to output	$V_{OVP} = V_{thr}$ +100mV		1	2	µs
OVER CURRENT PROTECTION COMPARATOR						
V_{th}	Threshold Voltage				±30	mV
t_d	Propagation delay to Output	$V_{OCP} = V_{thr}$ -0.2V		0.4	0.9	µs
I_{ipk}	Current Source Generator	V_{IPK} = -0.1V **only for L4981A**	65	85	105	µA
I_L	Leakage Current	V_{IPK} = -0.1V **only for L4981B**			5	µA
CURRENT AMPLIFIER SECTION						
V_{offset}	Input Offset Voltage	$V_{MULT\ OUT} = V_{SENSE}$ = 3.5V			±2	mV
I_{9bias}	Input Bias Current	V_{SENSE} = 0V	-500	50	500	nA
	Open Loop Gain	1.1V ≤ $V_{CA\ OUT}$ ≤ 6V	70	100		dB
SVR	Supply Voltage Rejection	12V ≤ V_{CC} ≤ 19V $V_{MULT\ OUT}$ = 3.5V V_{SENSE} = 3.5V	68	90		dB
V_{5H}	Output High Voltage	$V_{MULT\ OUT}$ = 200mV $I_{CA\ OUT}$ = -0.5mA, V_{IAC} = 0V	6.2			V
V_{5L}	Output Low Voltage	$V_{MULT\ OUT}$ = -200mV $I_{CA\ OUT}$ = 0.5mA, V_{IAC} = 0V			0.9	V
$-I_5$	Output Source Current	$V_{MULT\ OUT}$ = 200mV, V_{IAC} = 0V, $V_{CA\text{-}OUT}$ = 3.5V	2	10		mA
I_5	Output Sink Current		2	10		mA
OUTPUT SECTION						
V_{20L}	Output Voltage Low	I_{SINK} = 250mA		0.5	0.8	V
V_{20H}	Output Voltage High	I_{SOURCE} = 250mA V_{CC} = 15V	11.5	12.5		V
t_r	Output Voltage Rise Time	C_{OUT} = 1nF		50	150	ns
t_f	Output Voltage Fall Time	C_{OUT} = 1nF		30	100	ns
V_{GDRV}	Voltage Clamp	I_{SOURCE} = 0mA	13	16	19	V
TOTAL STANDBY CURRENT SECTION						
$I_{19start}$	Supply Current before start up	V_{CC} = 14V		0.3	0.5	mA
I_{19on}	Supply Current after turn on	V_{IAC} = 0V, V_{COSC} = 0, Pin17 = Open		8	12	mA
I_{19}	Operating Supply Current	Pin20 = 1nF		12	16	mA
V_{CC}	Zener Voltage	(*)	20	25	30	V
UNDER VOLTAGE LOCKOUT SECTION						
$V_{th\ ON}$	Turn on Threshold		14.5	15.5	16.5	V
$V_{th\ OFF}$	Turn off Threshold		9	10	11	V
	Programmable Turn-on Threshold	Pin 15 to V_{CC} = 220K Pin15 to GND = 33K	10.6	12	13.4	V
LOAD FEED FORWARD						
I_{LFF}	Bias Current	V_6 = 1.6V		70	140	µA
		V_6 = 5.3V		200	300	µA
V_I	Input Voltage Range		1.6		5.3	V

(*) Maximum package power dissipation limits must be observed.

ELECTRICAL CHARACTERISTICS (continued)

Symbol	Prameter	Test Condition	Min.	Typ.	Max.	Unit
MULTIPLIER SECTION						
	Multipler Output Current	V_{VA-OUT} = 4V, V_{RMS} = 2V, $V_{MULTOUT}$ = 0, V_{LFF} = 5.1V I_{AC} = 50µA, C_{OSC} = 0V	20	35	52	µA
		V_{VA-OUT} = 4V, V_{RMS} = 2V, $V_{MULTOUT}$ = 0, V_{LFF} = 5.1V I_{AC} = 200µA, C_{OSC} = 0V	100	135	170	µA
		V_{VA-OUT} = 2V, V_{RMS} = 2V, $V_{MULTOUT}$ = 0, V_{LFF} = 5.1V I_{AC} = 100µA, C_{OSC} = 0V	10	20	30	µA
		V_{VA-OUT} = 2V, V_{RMS} = 4V, $V_{MULTOUT}$ = 0, V_{LFF} = 5.1V I_{AC} = 100µA, C_{OSC} = 0V	2	5.5	11	µA
		V_{VA-OUT} = 4V, V_{RMS} = 4V, $V_{MULTOUT}$ = 0, V_{LFF} = 5.1V I_{AC} = 100µA, C_{OSC} = 0V	10	22	34	µA
		V_{VA-OUT} = 4V, V_{RMS} = 2V, $V_{MULTOUT}$ = 0, V_{LFF} = 2.5V C_{OSC} = 0V, I_{AC} = 200µA	20	37	54	µA
		V_{VA-OUT} = 4V, V_{RMS} = 4V $V_{MULTOUT}$ = 0, V_{LFF} = 5.1V I_{AC} = 200µA, C_{OSC} = 0V	20	39	54	µA
		V_{VA-OUT} = 2V, V_{RMS} = 4V, $V_{MULTOUT}$ = 0, V_{LFF} = 5.1V I_{AC} = 0, C_{OSC} = 0V	-2	0	2	µA
K	Multiplier Gain			0.37		

$$I_{MULT-OUT} = K \cdot I_{AC} \frac{(V_{VA-OUT} - 1.28) \cdot (0.8 \cdot V_{LFF} - 1.28)}{(V_{VRMS})^2}$$

if $V_{LFF} = V_{REF}$; $I_{MULT-OUT} = I_{AC} \frac{(V_{VA-OUT} - 1.28)}{(V_{VRMS})^2} \cdot K1$

where: K1 = 1V

Figure 1: MULTI-OUT vs. I_{AC} (V_{RMS} = 1.7V; V_{LFFD} = 5.1V)

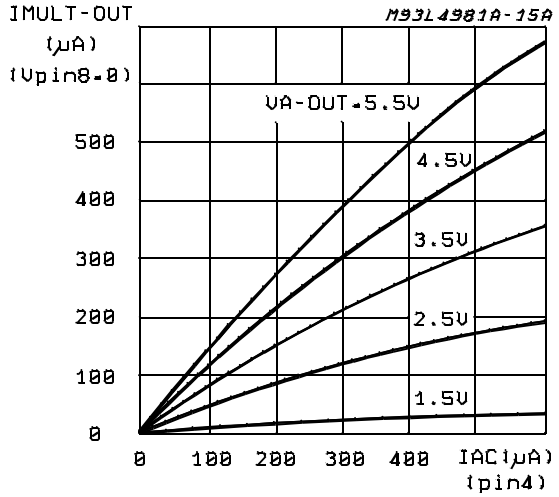

Figure 2: MULTI-OUT vs. I_{AC} (V_{RMS} = 2.2V; V_{LFFD} = 5.1V)

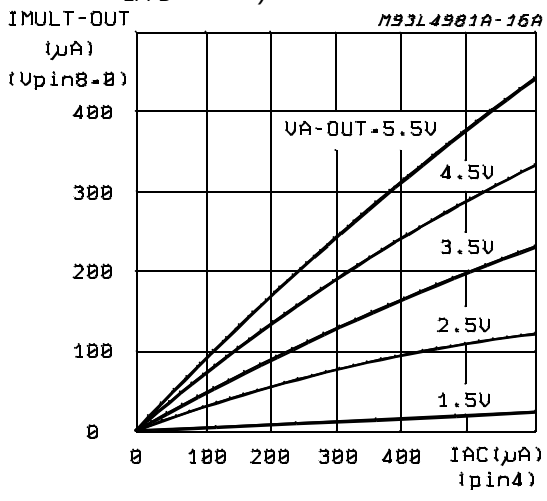

Figure 3: MULTI-OUT vs. I_{AC} (V_{RMS} = 4.4V; V_{LFFD} = 5.1V)

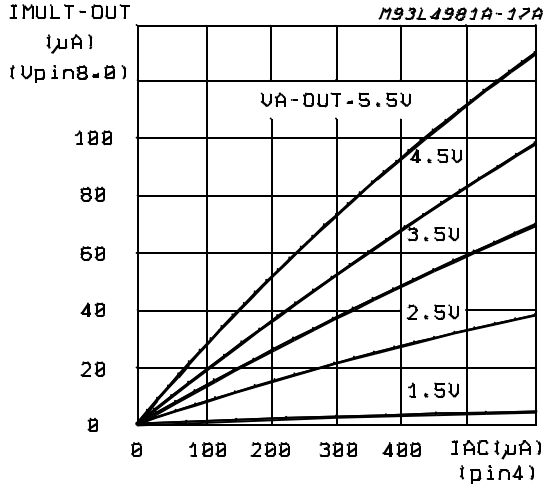

Figure 4: MULTI-OUT vs. I_{AC} (V_{RMS} = 5.3V; V_{LFFD} = 5.1V)

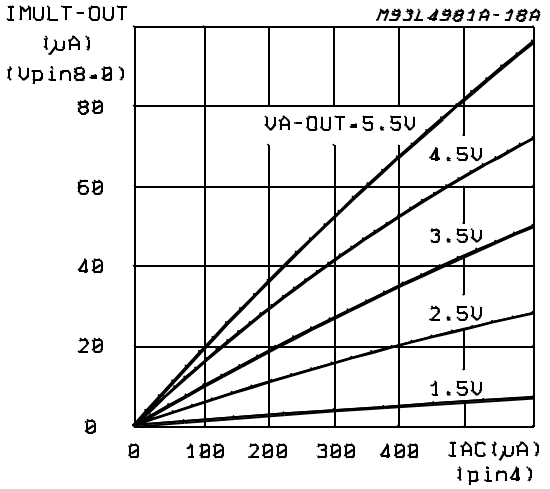

Figure 5: MULTI-OUT vs. I_{AC} (V_{RMS} = 1.7V; V_{LFFD} = 2.5V)

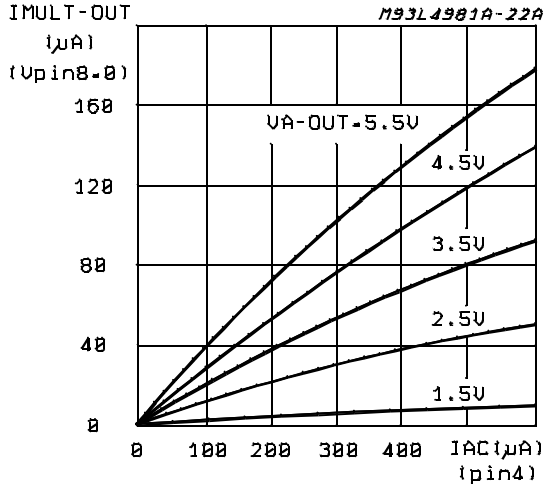

Figure 6: MULTI-OUT vs. I_{AC} (V_{RMS} = 2.2V; V_{LFFD} = 2.5V)

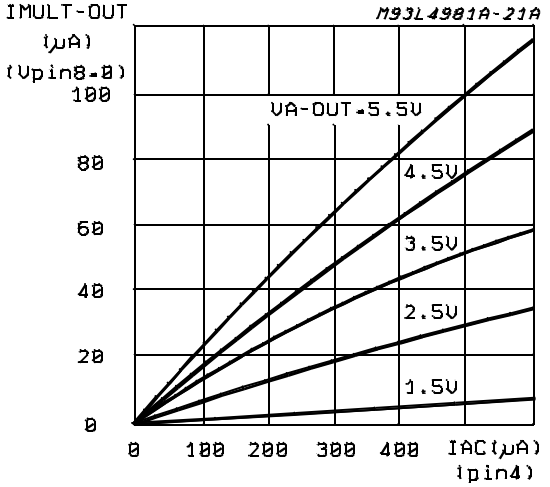

Figure 7: MULTI-OUT vs. I_{AC} (V_{RMS} = 4.4V; V_{LFFD} = 2.5V)

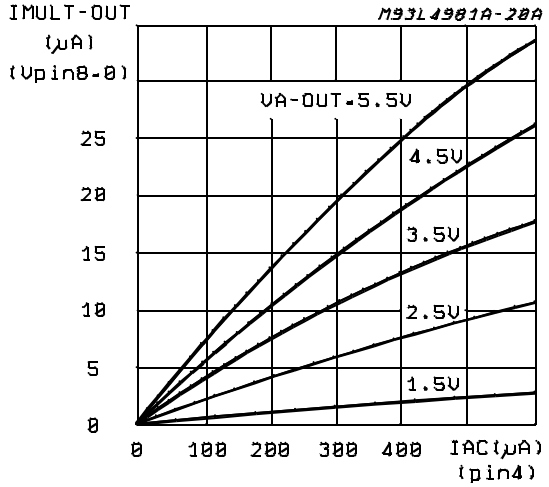

Figure 8: MULTI-OUT vs. I_{AC} (V_{RMS} = 5.3V; V_{LFFD} = 2.5V)

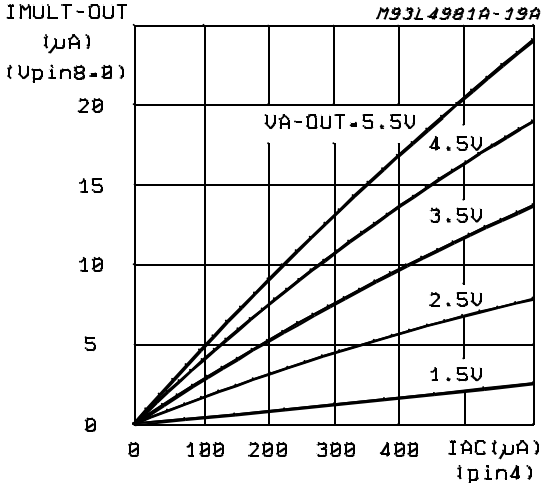

Figure 9A: L4981A Power Factor Corrector (200W)

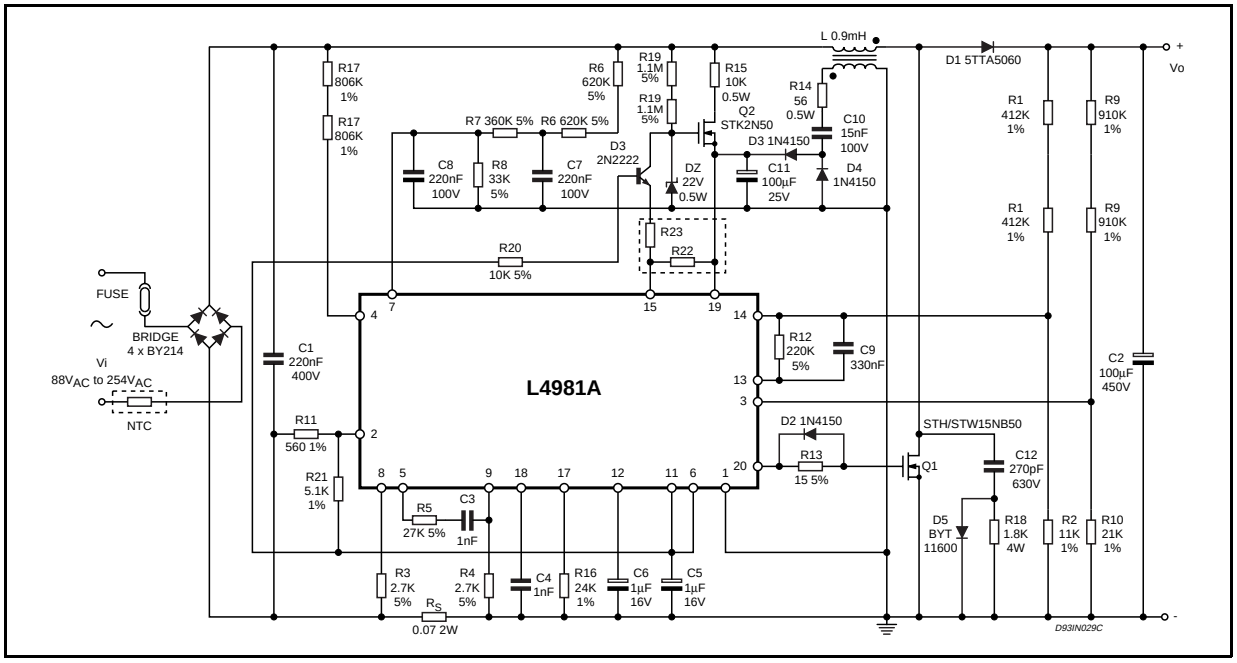

f_{SW} = 80kHz; P_O = 200W; V_{OUT} = 400V; $I_{rms\ max}$ = 2.53A; V_{OVP} = 442V; $I_{PK\ max}$ = 6.2A

Figure 9B: L4981B Power Factor Corrector (200W)

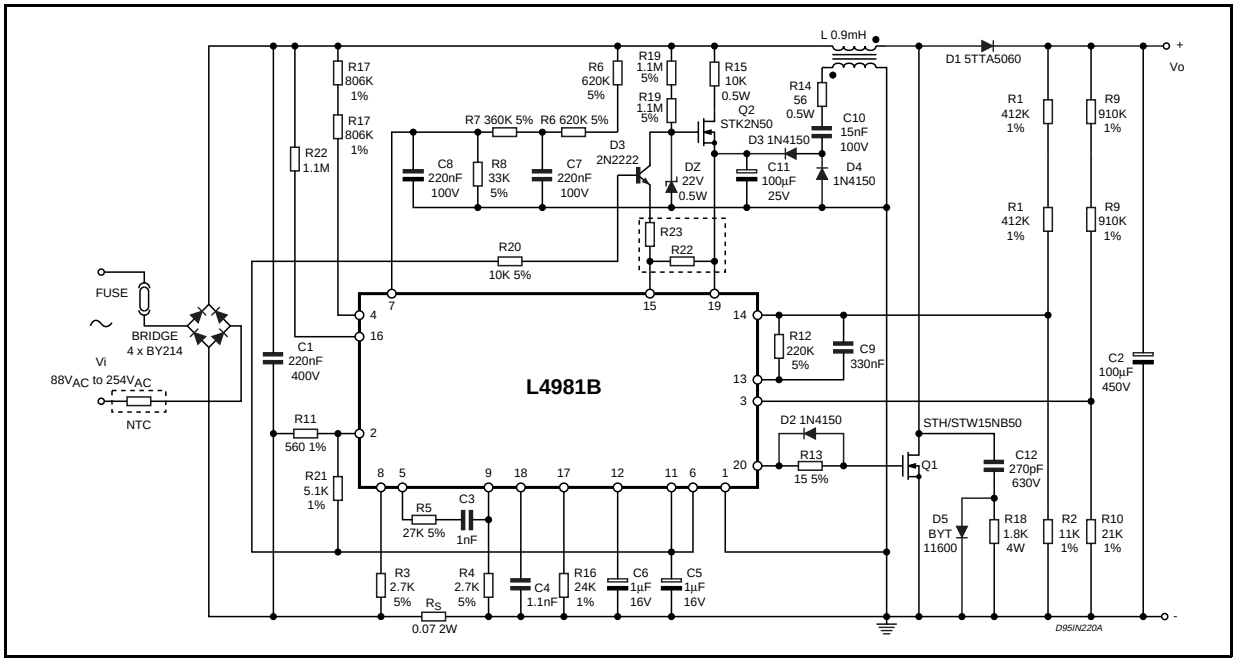

f_{SW} = 80 to 92kHz; P_O = 200W; V_{OUT} = 400V; $I_{rms\ max}$ = 2.53A; V_{OVP} = 442V; $I_{PK\ max}$ = 6.2A

Figure 10: Reference Voltage vs. Source Reference Current

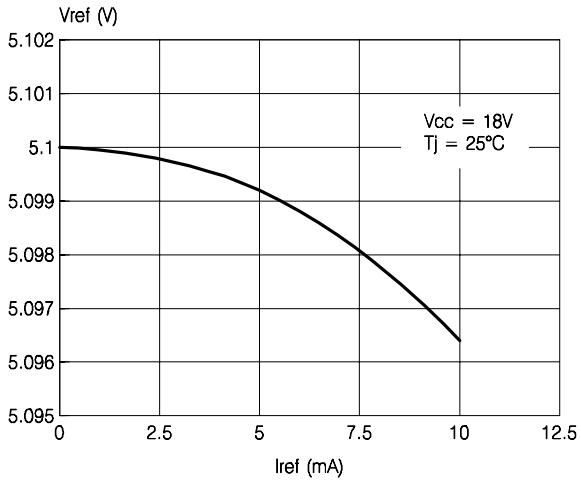

Figure 11: Reference Voltage vs. Supply Voltage

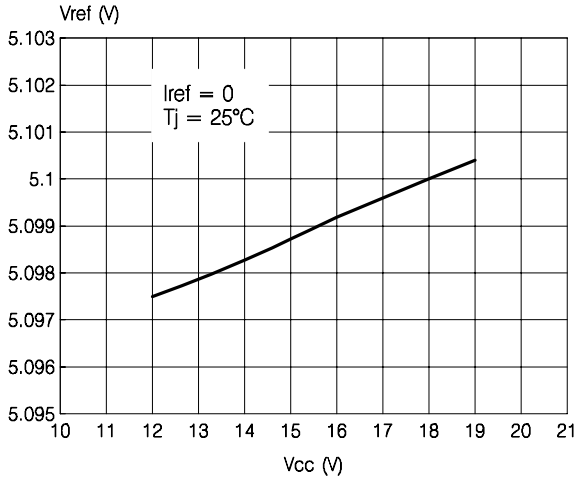

Figure 12: Reference Voltage vs. Junction Temperature

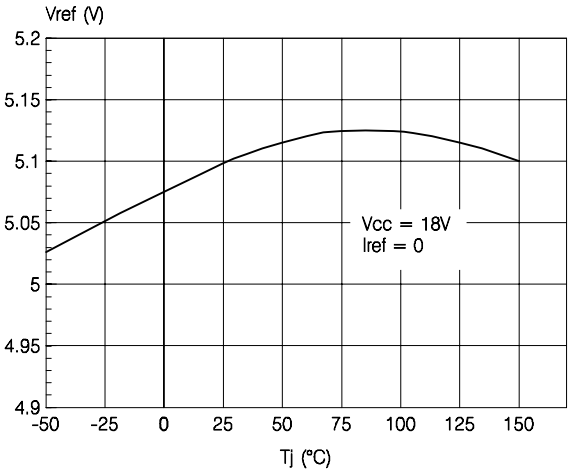

Figure 13: Switching Frequency vs. Junction Temperature

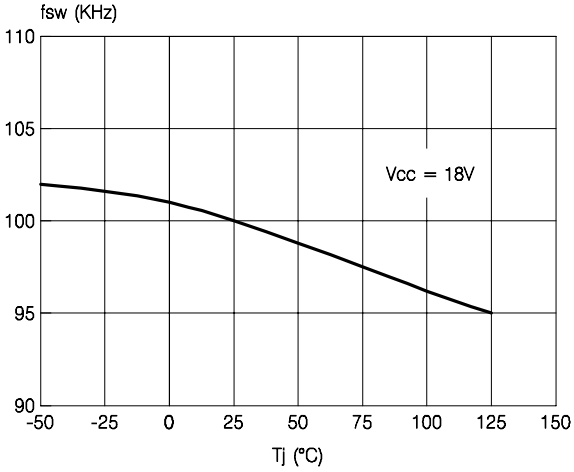

Figure 14: Gate Driver Rise and Fall Time

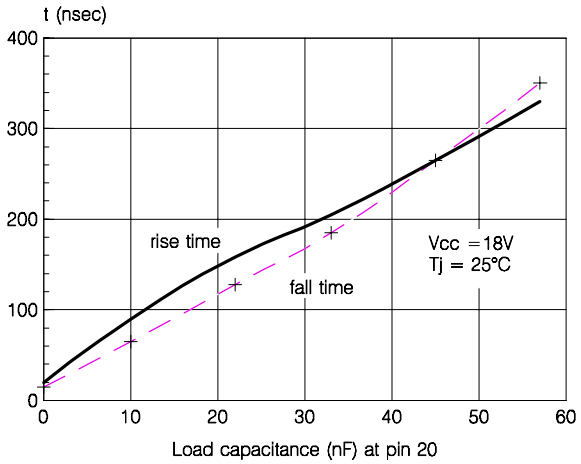

Figure 15: Operating Supply Current vs. Supply Voltage

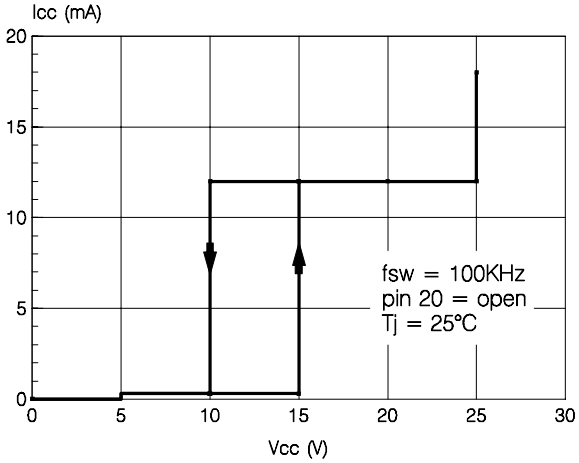

Figure 16: Programmable Under Voltage Lock-out Thresholds

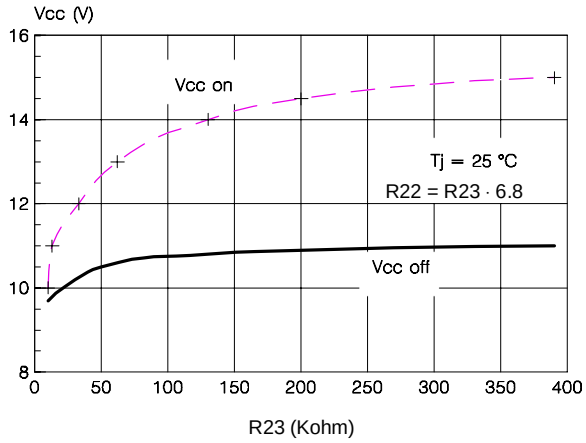

Figure 17: Modulation Frequency Normalized in an Half Cycle of the Mains Voltage

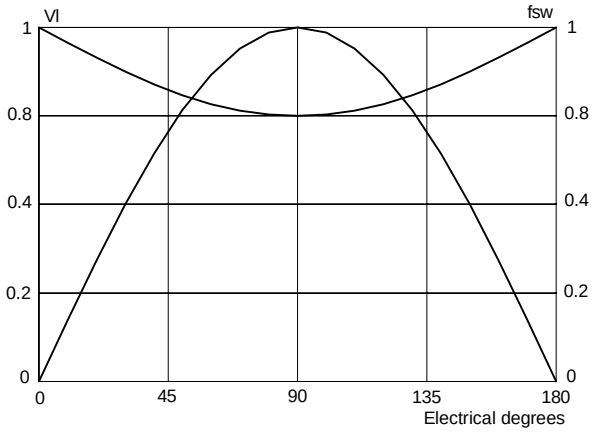

Table 1: Programmable Under Voltage Lockout Thresholds.

$V_{CC\ ON}$	$V_{CC\ OFF}$	R22	R23
11V	10V	82kΩ	12kΩ
12V	10.1V	220kΩ	33kΩ
13V	10.5V	430kΩ	62kΩ
14V	10.8V	909kΩ	133kΩ
14.5V	10.9V	1.36MΩ	200kΩ
15V	11V	2.7MΩ	390kΩ

Figure 18: Oscillator Diagram

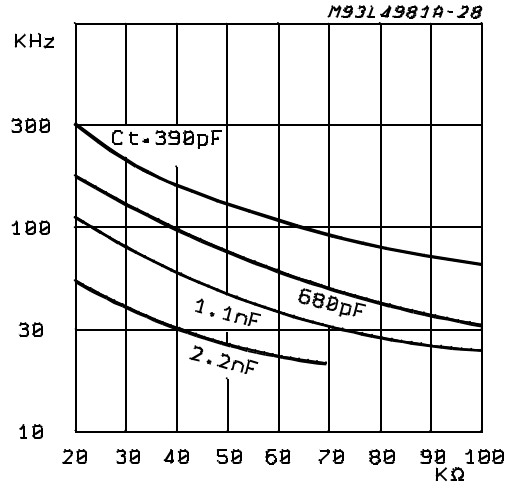

Figure 19: Demo Board Circuit (V_O = 400V; P_O = 360W).

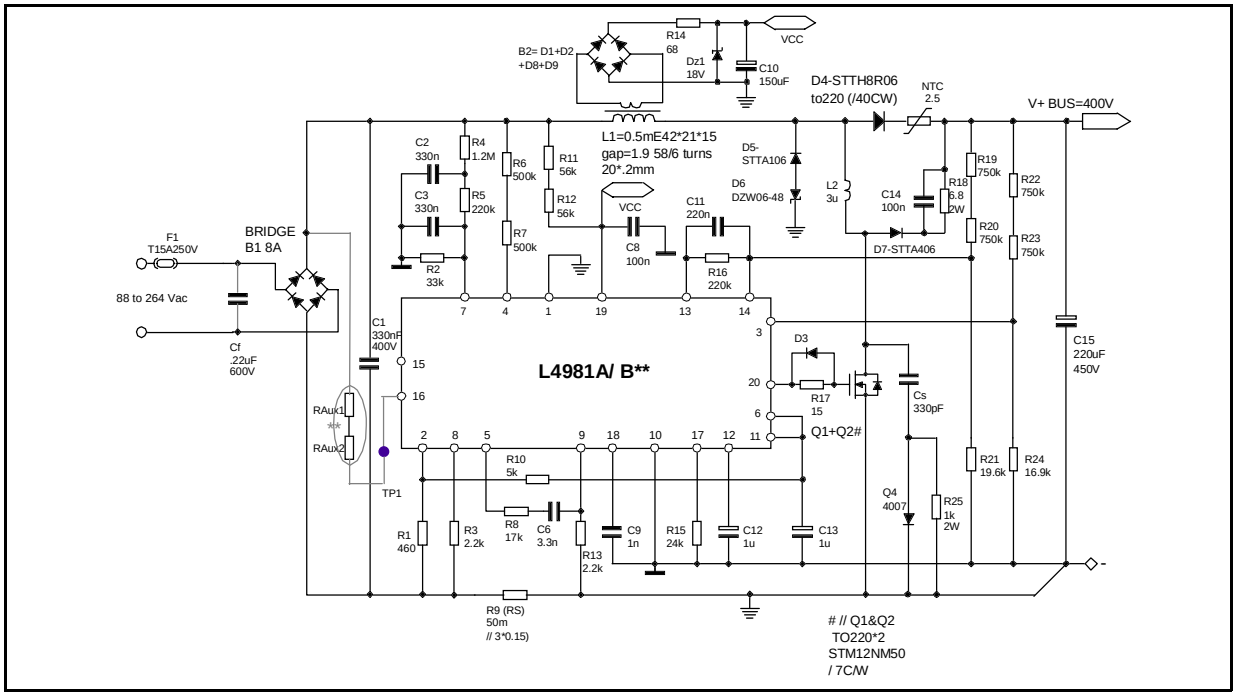

Figure 20: Component Layout (Dimensions 88 x 150mm).

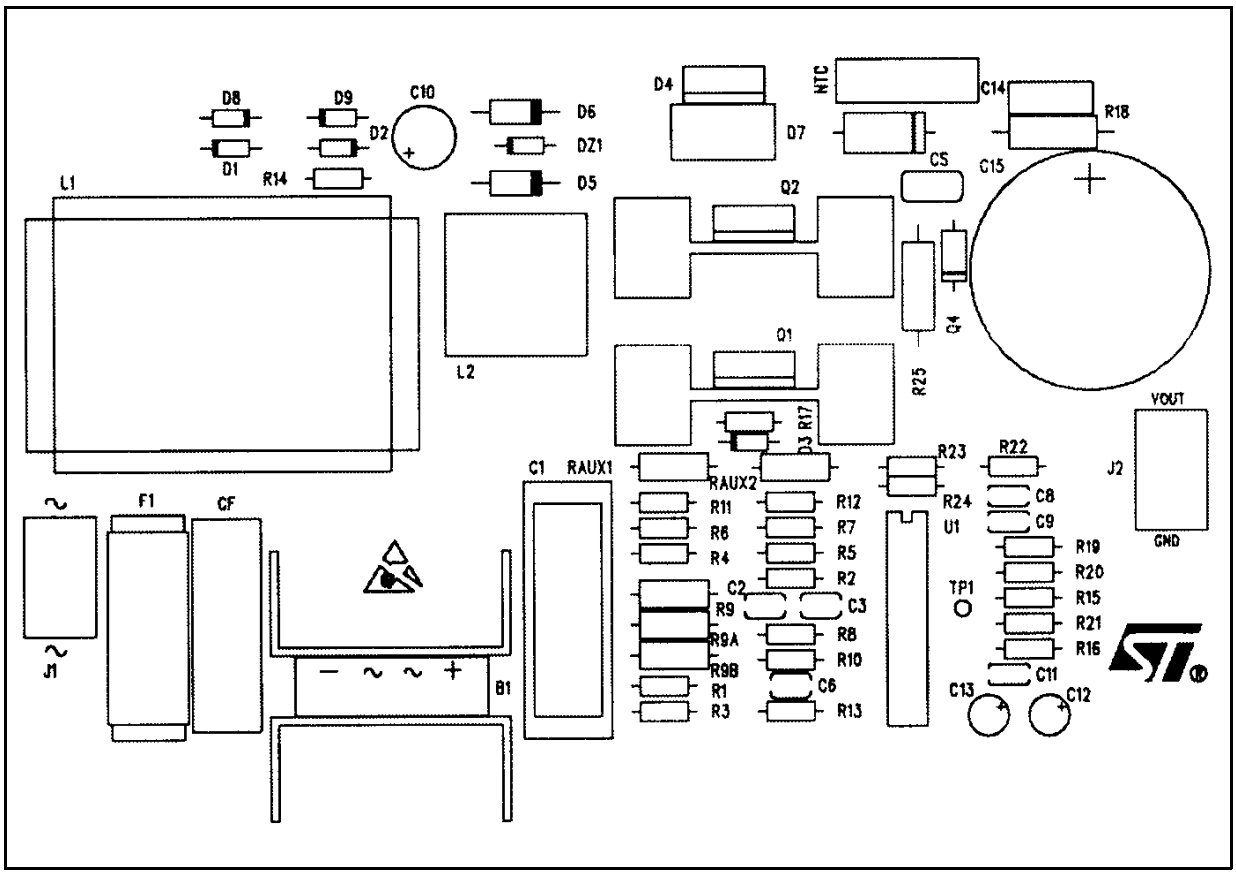

Figure 20: P.C.B. Component Side (Dimensions 88 x 150mm).

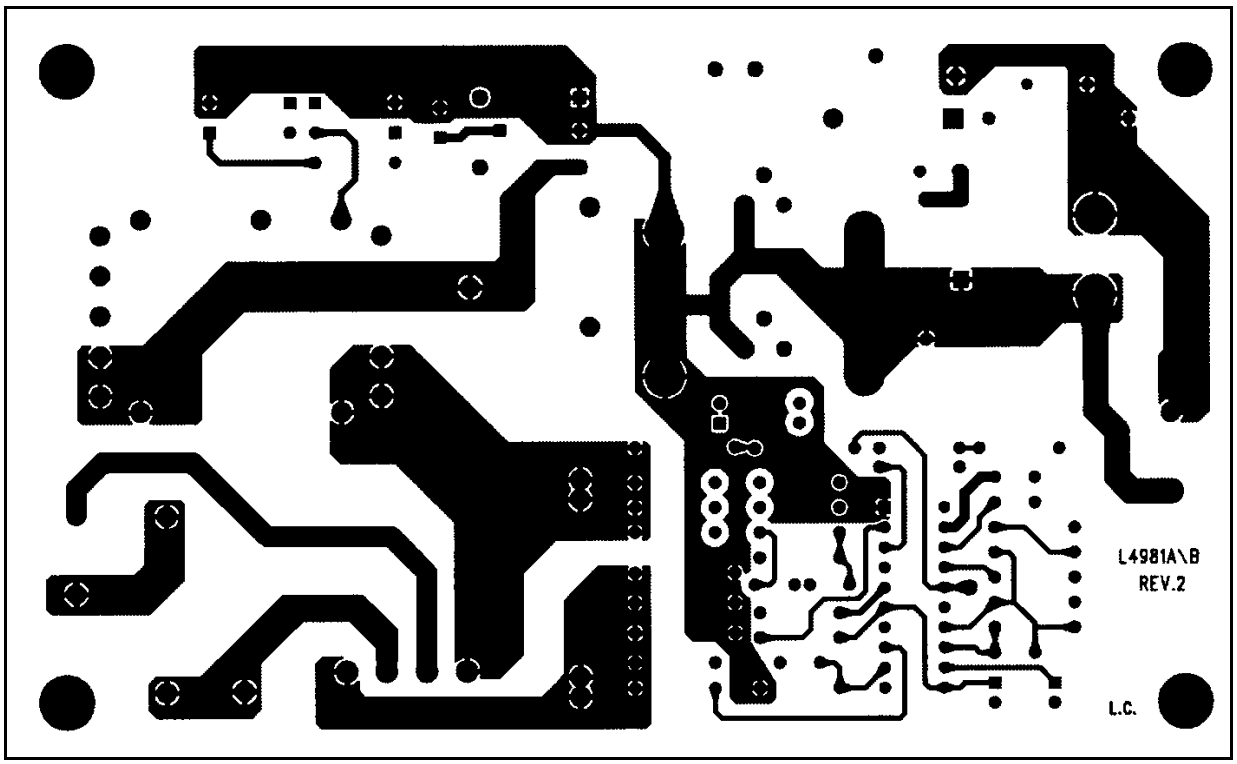

Figure 20: P.C.B. Solder Side (Dimensions 88 x 150mm).

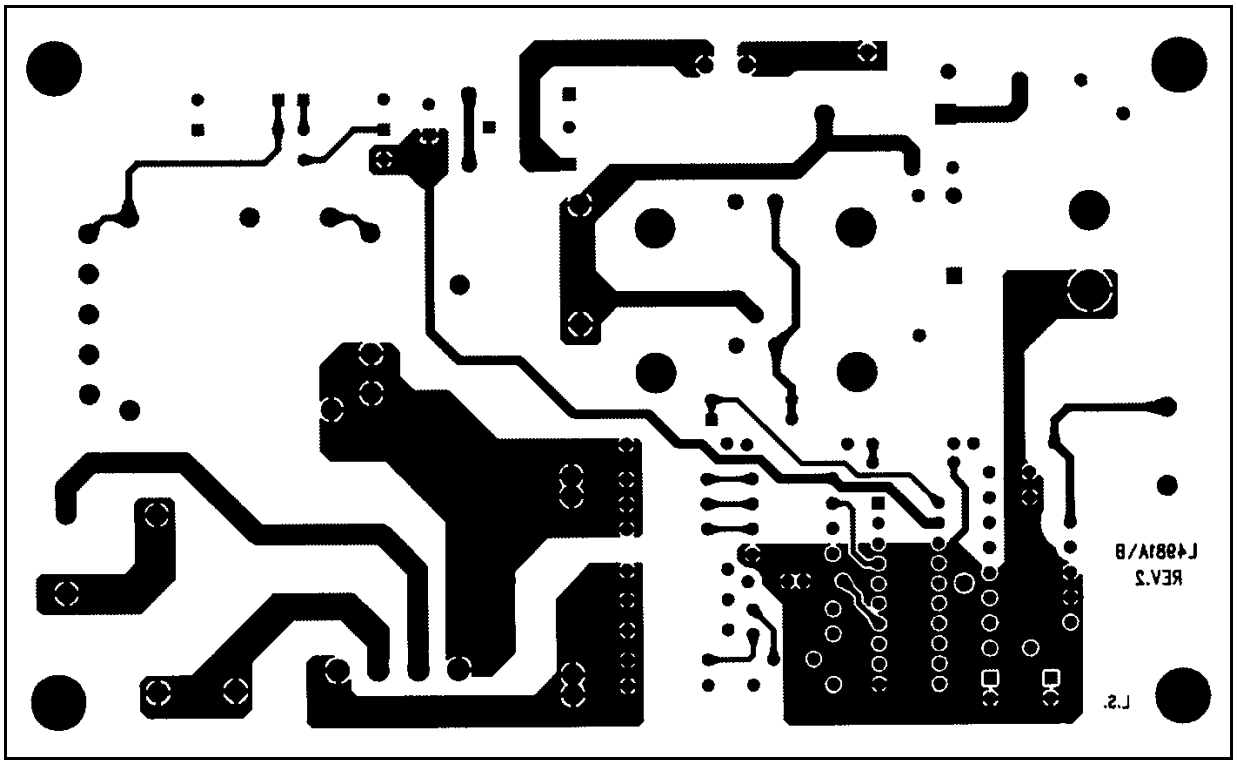

DEMO BOARD EVALUATION RESULTS

Table 2. Nominal Power range at 110Vac.

V_{mains}	P_{out}	V_{out}	P_{in}	THD	PF	Eff.
88Vac	366W	404Vdc	397W	5%	0.998	.92
110Vac	370W	406Vdc	395W	2.2%	0.999	.94
132Vac	372W	407Vdc	394W	3%	0.999	.945

Table 3. Nominal Power range at 220Vac.

V_{mains}	P_{out}	V_{out}	P_{in}	THD	PF	Eff.
176Vac	378W	410Vdc	394W	4.7%	0.997	.959
220Vac	381W	412Vdc	395W	6.4%	0.993	.964
264Vac	381W	412Vdc	395W	8.1%	0.987	.964

REFERENCE:

AN628 - DESIGNING A HIGH POWER FACTOR SWITCHING PREREGULATOR WITH THE L4981 CONTINUOUS MODE

DIM.	mm			inch		
	MIN.	TYP.	MAX.	MIN.	TYP.	MAX.
A	2.35		2.65	0.093		0.104
A1	0.1		0.3	0.004		0.012
B	0.33		0.51	0.013		0.020
C	0.23		0.32	0.009		0.013
D	12.6		13	0.496		0.512
E	7.4		7.6	0.291		0.299
e		1.27			0.050	
H	10		10.65	0.394		0.419
h	0.25		0.75	0.010		0.030
L	0.4		1.27	0.016		0.050
K	0˚ (min.)8˚ (max.)					

OUTLINE AND MECHANICAL DATA

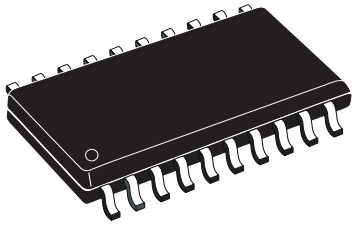

SO20

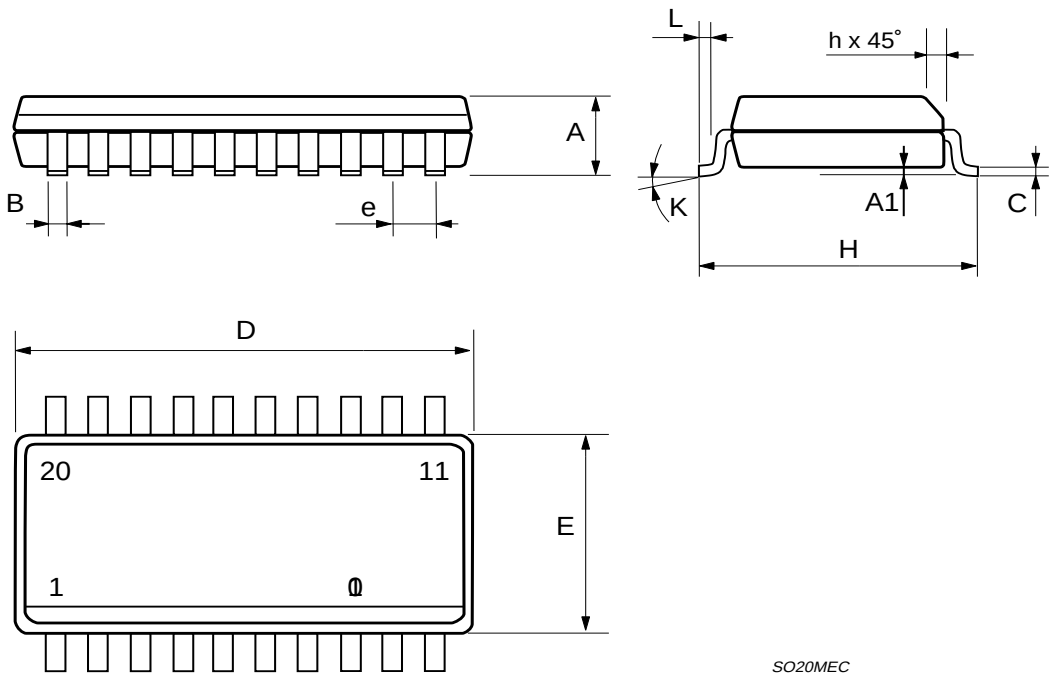

DIM.	mm			inch		
	MIN.	TYP.	MAX.	MIN.	TYP.	MAX.
a1	0.254			0.010		
B	1.39		1.65	0.055		0.065
b		0.45			0.018	
b1		0.25			0.010	
D			25.4			1.000
E		8.5			0.335	
e		2.54			0.100	
e3		22.86			0.900	
F			7.1			0.280
I			3.93			0.155
L		3.3			0.130	
Z			1.34			0.053

OUTLINE AND MECHANICAL DATA

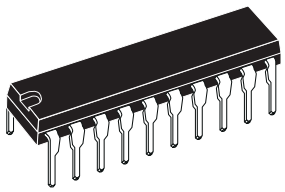

DIP20

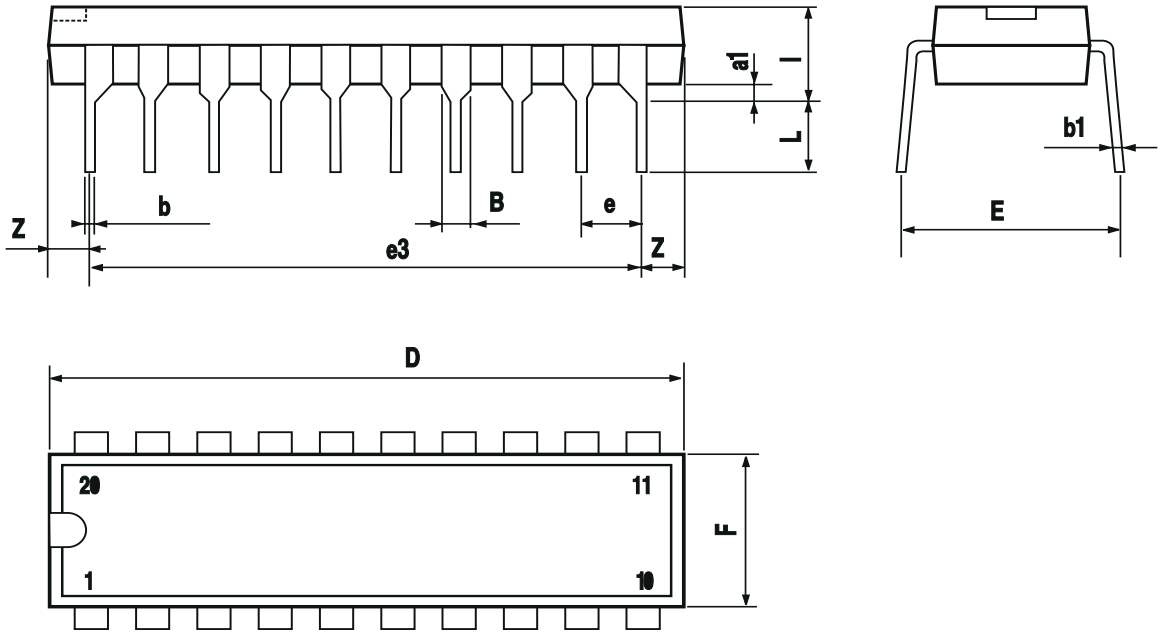

Information furnished is believed to be accurate and reliable. However, STMicroelectronics assumes no responsibility for the consequences of use of such information nor for any infringement of patents or other rights of third parties which may result from its use. No license is granted by implication or otherwise under any patent or patent rights of STMicroelectronics. Specification mentioned in this publication are subject to change without notice. This publication supersedes and replaces all information previously supplied. STMicroelectronics products are not authorized for use as critical components in life support devices or systems without express written approval of STMicroelectronics.

The ST logo is a registered trademark of STMicroelectronics

© 2001 STMicroelectronics – Printed in Italy – All Rights Reserved

STMicroelectronics GROUP OF COMPANIES

Australia - Brazil - Canada - China - Finland - France - Germany - Hong Kong - India - Israel - Italy - Japan - Malaysia - Malta - Morocco - Singapore - Spain - Sweden - Switzerland - United Kingdom - United States.

http://www.st.com

Стандарт Электрон Связь

Мы молодая и активно развивающаяся компания в области поставок электронных компонентов. Мы поставляем электронные компоненты отечественного и импортного производства напрямую от производителей и с крупнейших складов мира.

Благодаря сотрудничеству с мировыми поставщиками мы осуществляем комплексные и плановые поставки широчайшего спектра электронных компонентов.

Собственная эффективная логистика и склад в обеспечивает надежную поставку продукции в точно указанные сроки по всей России.

Мы осуществляем техническую поддержку нашим клиентам и предпродажную проверку качества продукции. На все поставляемые продукты мы предоставляем гарантию .

Осуществляем поставки продукции под контролем ВП МО РФ на предприятия военно-промышленного комплекса России , а также работаем в рамках 275 ФЗ с открытием отдельных счетов в уполномоченном банке. Система менеджмента качества компании соответствует требованиям ГОСТ ISO 9001.

Минимальные сроки поставки, гибкие цены, неограниченный ассортимент и индивидуальный подход к клиентам являются основой для выстраивания долгосрочного и эффективного сотрудничества с предприятиями радиоэлектронной промышленности, предприятиями ВПК и научно-исследовательскими институтами России.

С нами вы становитесь еще успешнее!

Наши контакты:

Телефон: +7 812 627 14 35

Электронная почта: sales@st-electron.ru

Адрес: 198099, Санкт-Петербург,
Промышленная ул, дом № 19, литера Н,
помещение 100-Н Офис 331